E-MPS

LENNTECH
WATER TREATMENT SOLUTIONS

calpeda®

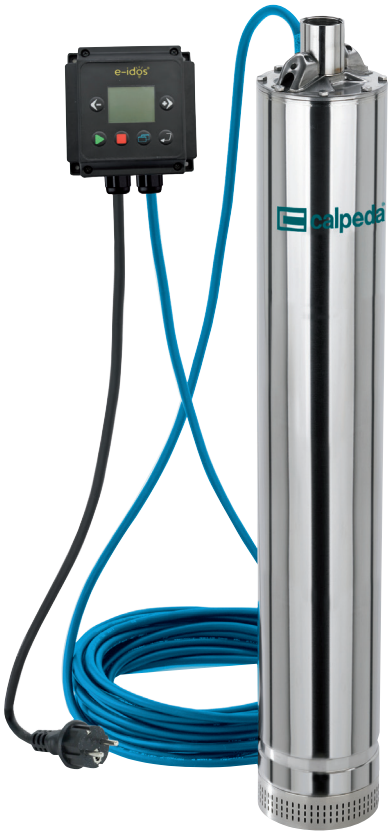

EASY TO INSTALL
Plug And play solution

ECONOMIC SAVING
High efficiency asynchronous motor 24 % less energy consumption compared to a standard pump

EASY TO USE
Equipped with a programmable software and, thanks to the analogic pressure sensor, the product allows to set the restart pressure. An ideal solution which allows to reduce or remove the need of a expansion tank

Multi-stage submersible pumps for clean water with built-in electronic pressure sensor

E-MPS

Construction

5” Close coupled multi-stage submersible pumps. Easy to install, compact and plug and play with integrated pressure transducer for automatic control of starting/stopping of the pump when utilization points are opened/closed with E-MPSM with built-in capacitor, accessible through the delivery casing.
Hydraulics located below the motor with the motor cooled by the pumped fluid.
Safe operation is possible with the motor only partially submerged.
Double shaft seal with oil chamber.
The suction strainer prevents the entrance of solids with diameter bigger than 2 mm.

Applications

For water supply from wells, tanks or reservoirs.
For domestic, civil and industrial applications, for garden use, irrigation rain water harvesting systems.

Features

high efficiency asynchronous motor
- capacitor less stressed in voltage
- uniform and lower motor temperature
- motor power control
- programmable re-start pressure
- programmable stop pressure
- no hydraulic losses due to the measuring devices
- voltage and current control
- monitoring of maximum starting current

Protections

- dry-run protection
- overload control and overheating motor control
- pump blockage
- power supply control
- starts per hour control

Operating conditions

Liquid temperature: 0 °C to +35 °C.
Minimum internal diameter of well: 140 mm.
Minimum immersion depth: 100 mm.
Maximum immersion depth: 20 m (with suitable cable length).
Continuous duty.

Motor

2-pole induction motor, 50 Hz (n ≈ 2900 rpm).
Single-phase 230 V ± 10%, with thermal protector.
Incorporated capacitor
Cable: - Pump 07BB-F, 3G1+4x0,34 mm2 , length 23 m.
Cable - Power supply cable H07RN8-F, 3G1,5 length 1,5 m with plug CEI-UNEL 47166.
Insulation class F.
Protection IP X8 (for continuous immersion).
Triple impregnation humidity-proof dry winding.
Constructed in accordance with EN 60335-2-41.(CEI 61-69)

Designation

Example: E-MPSM 304
E = Electronic
MPS = Series
M = Single-phase (without three-phase indication)
3 = Rated capacity in m3/h
04 = Number of impellers

Materials

Components	Material
delivery casing	Chrome-nickel steel 1.4301 EN 10088 (AISI 304)
External jacket	Chrome-nickel steel 1.4301 EN 10088 (AISI 304)
Suction strainer	Chrome-nickel steel 1.4301 EN 10088 (AISI 304)
motor jacket	Chrome-nickel steel 1.4301 EN 10088 (AISI 304)
Non-return valve	POM - POLYACETAL
Stage casing	PPO-GF20 (Noryl)
Impeller	PPO-GF20 (Noryl)
Shaft	Chrome-nickel steel 1.4301 EN 10088 (AISI 304)
Capacitor cover	PPS Polymer (Grivory)
Oil chamber cover	PPS Polymer (Grivory)
Support ring preload	PPS Polymer (Grivory)
Preload ring stages	PPS Polymer (Grivory)
Upper mechanical seal	Steatite, carbon, NBR
Lower mechanical seal	Carbone, carburo di silicio, NBR
Seal lubrication oil	Oil for food machinery and pharmaceutic use

E-MPS

Coverage chart n ≈ 2900 rpm

Single-phase

								Q = Flow												
							m³/h	0	1	1,5	2	2,5	3	3,5	4	4,5	5	6	7	8
Model	230V	Capacitor		P2		P1	l/min		16,6	25	33,3	41,6	50	58,3	66,6	75	83,3	100	117	133
	A	V	uf	kW	HP	kW	H (m) = Total head													
E-MPSM 304	4,1	450	25	0,55	0,75	0,8		44	50	47	44	40	36	32	26,5	21,5	-	-	-	-
E-MPSM 305	5	450	30	0,75	1	1		56	40	37,5	35	31,5	28,5	24,5	21	16	-	-	-	-
E-MPSM 306	6	450	35	0,9	1,2	1,2		66,5	60,5	57	53	48,5	43,5	38	32	26	-	-	-	-
E-MPSM 504	6	450	35	0,9	1,2	1,2		45	-	-	-	39,5	37,8	35,8	33,5	31	28	22	15,5	8
E-MPSM 505	7	450	35	1,1	1,5	1,3		53	-	-	-	47,5	45,5	43	40	37	33	26	18	10

P1: Maximum power input.
P2: Rated motor power output.
H: Total head in m

Test results with clean cold water, without gas content.
Tolerances according to UNI EN ISO 9906:2012

Characteristic curves n ≈ 2800 1/min

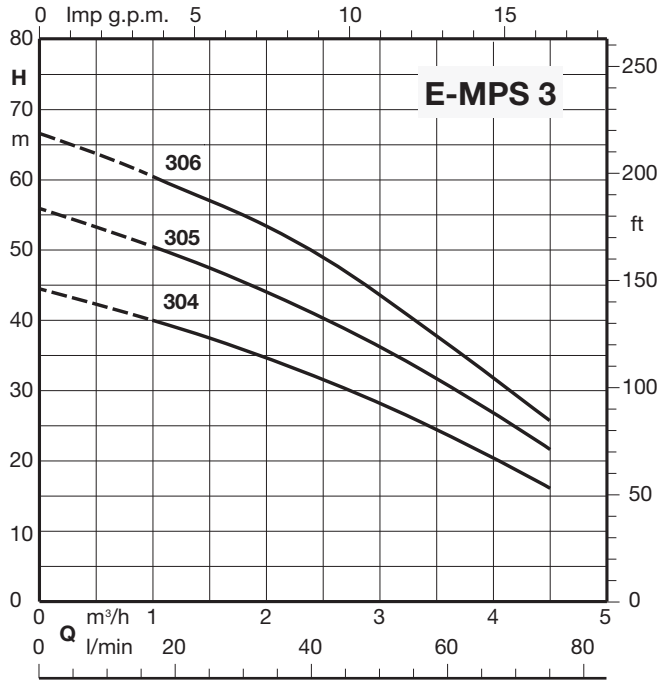

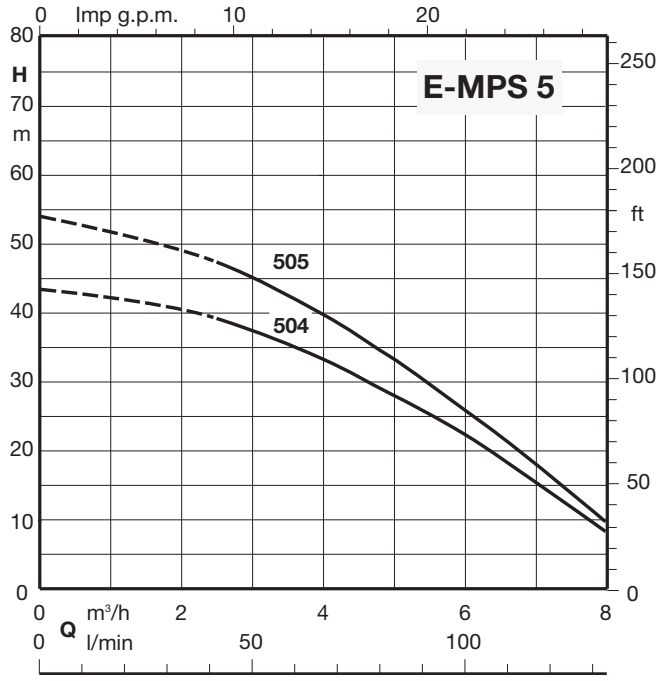

E-MPS

calpeda®

Dimensions and weights

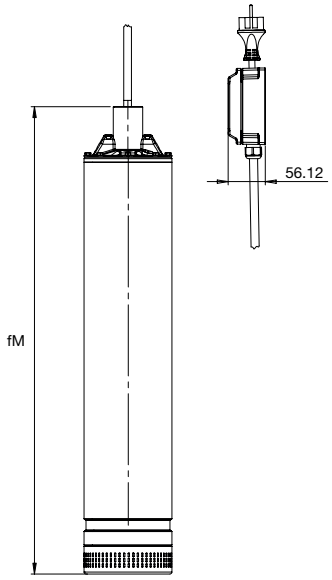

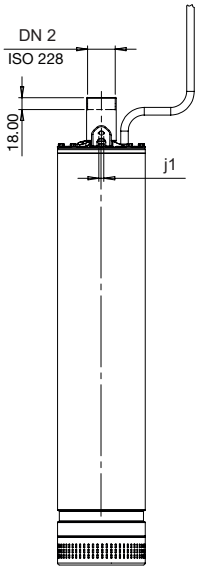

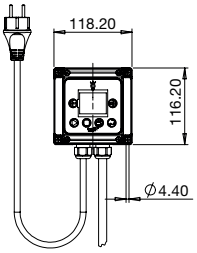

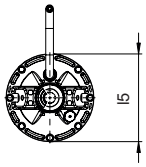

TYPE	ISO 228	mm			kg
	DN2	fM	j1	l5	Weight
E-MPSM 304	G 1 1/4	659.2	7	133	15.5
E-MPSM 305	G 1 1/4	708.2	7	133	16.9
E-MPSM 306	G 1 1/4	732.2	7	133	17.8
E-MPSM 504	G 1 1/4	684.2	7	133	17.1
E-MPSM 505	G 1 1/4	708.2	7	133	17.4

With cable length: 23 m

Installation

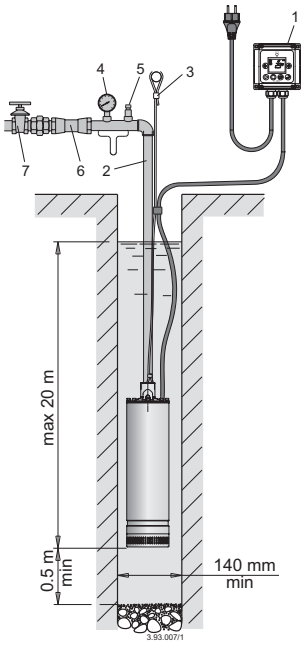

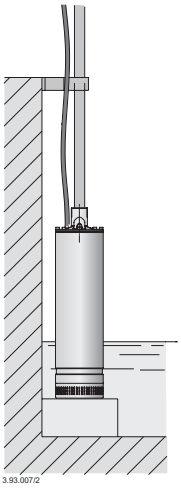

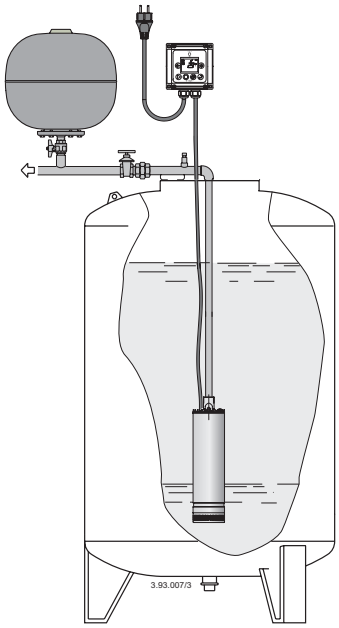

1. Control box
2. Delivery pipe
3. Safety rope
4. Pressure gauge
5. Air vent valve
6. Gate valve
7. Pressure tank

Pump in suspended position

Pump in the standing position

Examples of installations

LENNTECH
WATER TREATMENT SOLUTIONS
info@lenntech.com Tel. +31-152-610-900
www.lenntech.com Fax. +31-152-616-289