TI01425C/07/EN/01.18
71426521
2018-09-20

LENNTECH
WATER TREATMENT SOLUTIONS

Technical Information
CCS50

Sensor for determining chlorine dioxide



CCS50 offers high-precision measurement with long-term stability to guarantee optimum process monitoring

Application

- Drinking water – to guarantee reliable disinfection
- Cooling water – to prevent the growth of biofilms and pathogens
- Food – to guarantee food safety
- Auxiliary equipment or utility services - to ensure the absence/presence of chlorine dioxide

Your benefits

- Fast response time (t_{90} < 15 s) provides an accurate process view and enables prompt reaction to process changes as well as efficient process control.
- Increased process safety: precise and long-term stable measurement ensures consistent process monitoring and allows for individually adapted disinfectant dosing
- Flexible installation: sensor can be installed in the CCA151 and CCA250 flow assemblies or in immersion assemblies. Measurement virtually flow independent at flow velocities above 5 l/h (CCA151), 30 l/h (CCA250) or above 15 cm/s (immersion).
- The low-maintenance, amperometric sensor reduces the cost of ownership of the measuring point, particularly compared to colorimetric measuring systems.
- Connection to the Liquisys chlorine transmitter ensures continuity for the installed base of analog chlorine dioxide measuring points.

Endress+Hauser
People for Process Automation

Function and system design

Measuring principle

Chlorine dioxide levels are determined in accordance with the amperometric measuring principle.

The chlorine dioxide (ClO_2) in the medium diffuses through the sensor membrane and is reduced to chloride ions (Cl^-) at the gold cathode. At the silver anode, silver is oxidized to silver chloride. Electron donation at the gold cathode and electron acceptance at the silver anode cause a current to flow which is proportional to the concentration of chlorine dioxide in the medium. This process does not depend on the pH value over a wide range.

The transmitter uses the current signal to calculate the measured variable for concentration in mg/l (ppm).

Function

The sensor consists of:
- Membrane cap (measuring chamber with membrane)
- Sensor shaft with anode with large surface area (counter-electrode) and a cathode embedded in plastic (working electrode)

The electrodes are in an electrolyte which is separated from the medium by a membrane. The membrane prevents the electrolyte from leaking and protects against contaminant penetration.

The measuring system is calibrated by means of a colorimetric comparison measurement in accordance with the DPD method for chlorine dioxide. The calibration value determined is entered in the transmitter.

Cross-sensitivities [1)]

Free chlorine, ozone, free bromine

There were no cross-sensitivities for: H_2O_2, peracetic acid

Measuring system

A complete measuring system comprises:
- Disinfection sensor CCS50 (membrane-covered, Ø25 mm) with corresponding installation adapter
- Flowfit CCA151 flow assembly
- Transmitter , e. g. Liquisys CCM223/253
- Optional: Flowfit CCA250 flow assembly (if a pH/ORP sensor is to be installed in addition)
- Optional: Immersion assembly Flexdip CYA112
- Optional: proximity switch

1) The listed substances were examined with different concentrations. An additive effect has not been investigated.

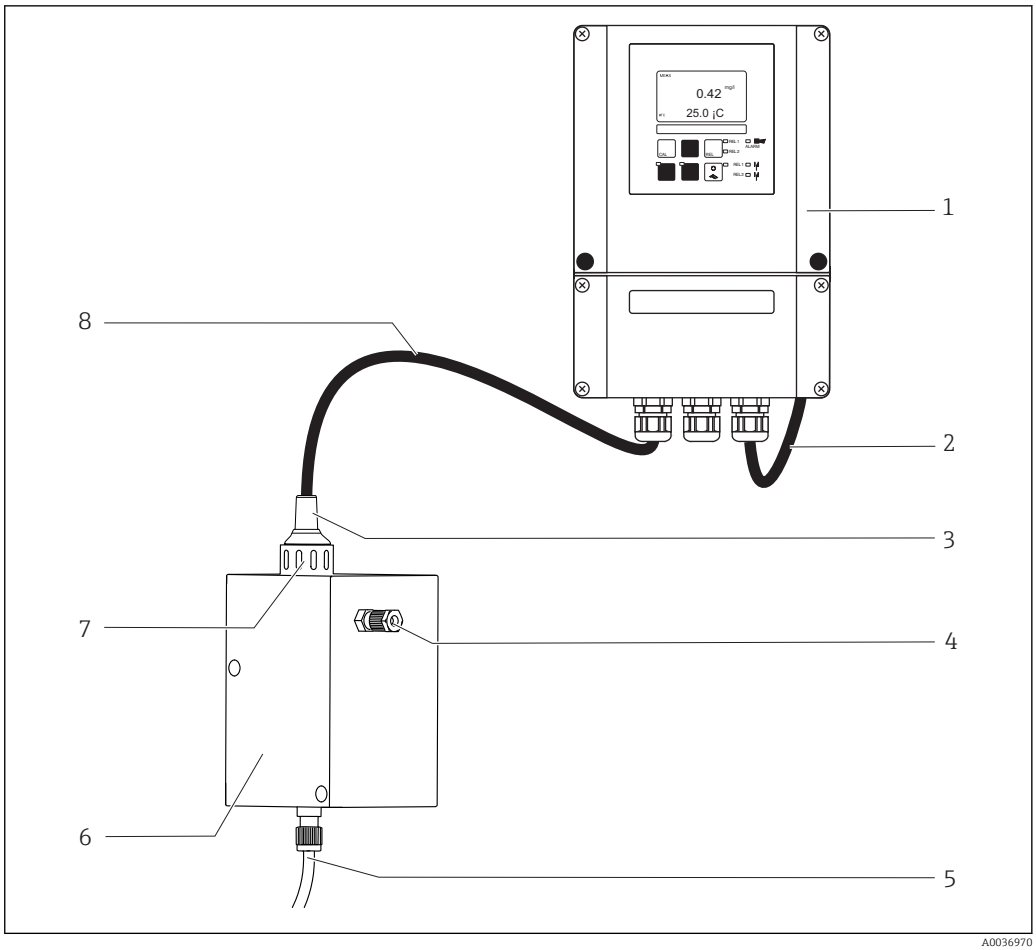

1 *Example of a measuring system*

1 *Liquisys CCM223/253 transmitter*
2 *Power cable for transmitter*
3 *Disinfection sensor CCS50 (membrane-covered, Ø25 mm)*
4 *Outlet from Flowfit CCA151 flow assembly*
5 *Inlet to Flowfit CCA151 flow assembly*
6 *Flowfit CCA151 flow assembly*
7 *Union nut for installing a disinfection sensor in the Flowfit CCA151 flow assembly*
8 *Fixed cable of CCS50 disinfection sensor*

▶ Ground the medium at the sensor by means of the PML pin to ensure a high reading stability.

Input

Measured variables	Chlorine dioxide (ClO_2) Temperature	[mg/l, µg/l, ppm, ppb] [°C, °F]
Measuring ranges	CCS50-**11AD* CCS50-**11BF*	0 to 5 mg/l (ppm) ClO_2 0 to 20 mg/l (ppm) ClO_2
Signal current	CCS50-**11AD* CCS50-**11BF*	135 to 250 nA per 1 mg/l (ppm) ClO_2 35 to 65 nA per 1 mg/l (ppm) ClO_2

Power supply

Electrical connection

▶ Install the grounding bar (order number 51501086) in accordance with the accompanying instructions in order to guarantee a high reading stability.

NOTICE

Measured errors due to faulty connection

▶ When connecting the sensor cable, make sure that the black semi-conductor layer is removed as far as the inner shield.

The sensors have a fixed cable of 3 m (9.8 ft) maximum in length.

▶ Connect the sensors to the transmitter according to the following diagram:

Sensor: assignment	Sensor: core	Transmitter: terminal
Outer shield		S
Anode	[A] red	91
Cathode	[K] transparent	90
NTC temperature sensor	Green	11
NTC temperature sensor	Brown	12

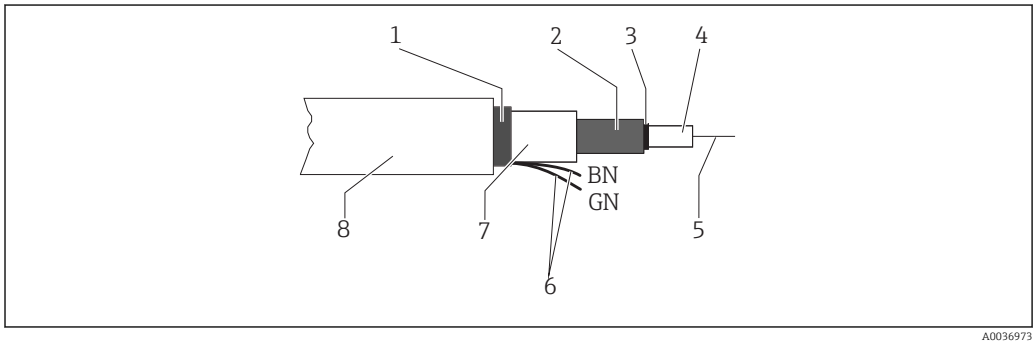

2 *Structure of the sensor cable*

1 Outer shield
2 Inner shield, anode
3 Semi-conductor layer
4 Inner insulation
5 Inner conductor, measured signal
6 Temperature sensor connection
7 2nd insulation
8 Outer insulation

Performance characteristics

Reference operating conditions	Temperature	20 °C (68 °F)
	pH value	pH 6 to 7
	Flow	40 to 60 cm/s
	ClO_2-free base medium	Deionized water
Response time	T_{90} < 15 s (after completing polarization)	
Measured value resolution of sensor	CCS50-**11AD*	0.03 µg/l (ppb) ClO_2
	CCS50-**11BF*	0.13 µg/l (ppb) ClO_2
Measured error [2)]	±2 % or ±5 µg/l (ppb) of value measured (depending on which value is higher)	

	LOD (limit of detection)	LOQ (limit of quantification)
CCS50-**11AD*	0.0007 mg/l (ppm)	0.002 mg/l (ppm)
CCS50-**11BF*	0.0013 mg/l (ppm)	0.004 mg/l (ppm)

Repeatability	CCS50-**11AD*	0.002 mg/l (ppm)
	CCS50-**11BF*	0.007 mg/l (ppm)
Nominal slope	CCS50-**11AD*	195 nA per 1 mg/l (ppm) ClO_2
	CCS50-**11BF*	50 nA per 1 mg/l (ppm) ClO_2
Long-term drift	< 1 % per month (mean value, determined while operating at varying concentrations and under reference conditions)	
Polarization time	Initial commissioning	60 min
	Recommissioning	30 min
Operating time of the electrolyte	at maximum concentration and 55 °C	60 days
	at 50 % of measuring range and 20 °C	1 year
	at 10 % of measuring range and 20 °C	2 years

2) Based on ISO 15839. The measured error includes all the uncertainties of the sensor and transmitter (measuring chain). It does not contain all the uncertainties caused by the reference material and adjustments that may have been performed.

Installation

Orientation

Do not install upside-down!

- ▶ Install the sensor in an assembly, support or appropriate process connection at an angle of at least 15 ° to the horizontal.
- ▶ Other angles of inclination are not permitted.
- ▶ Follow the instructions for installing the sensor in the Operating Instructions of the assembly used.

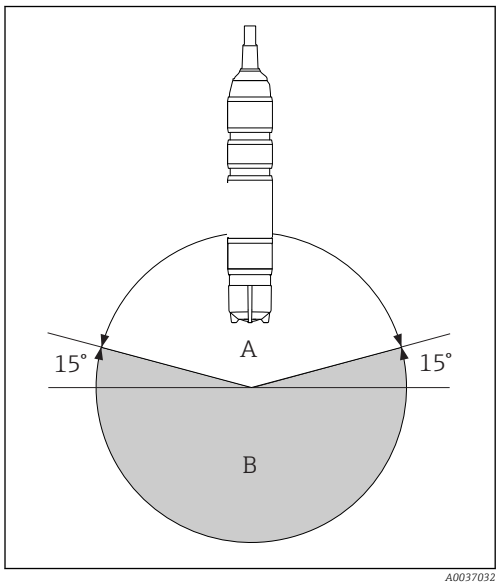

A *Permitted orientation*
B *Incorrect orientation*

Immersion depth

77 mm (3.03 in)

Installation instructions

Installation in Flowfit CCA151 flow assembly

The disinfection sensor (membrane-covered, Ø25 mm) is designed for installation in the Flowfit CCA151 flow assembly.

Please note the following during installation:

- ▶ The flow rate must be at least 5 l/h (1.32 gal/h).
- ▶ If the medium is returned to an overflow basin, pipe or similar, the resulting counterpressure on the sensor must not exceed 1 bar (14.5 psi) and must remain constant.
- ▶ Avoid negative pressure at the sensor, e.g. due to medium being returned to the suction side of a pump.
- ▶ To avoid buildup, heavily contaminated water should also be filtered.

Preparing assembly

1. The assembly is supplied to the customer with a union nut screwed onto the assembly: unscrew union nut from assembly.

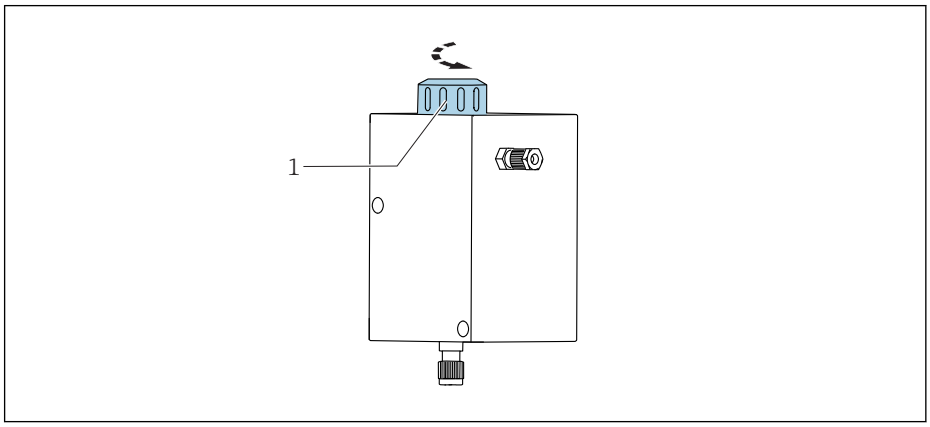

3 Flowfit CCA151 flow assembly

1 Union nut

2. The assembly is supplied to the customer with a dummy plug inserted in the assembly: remove dummy plug from assembly.

Equip sensor with adapter

The required adapter (clamping ring, thrust collar and O-ring) can be ordered as a mounted sensor accessory or as a separate accessory → 12.

1. First slide the clamping ring, then the thrust collar, and then the O-ring from the membrane cap towards the sensor head and into the lower groove.

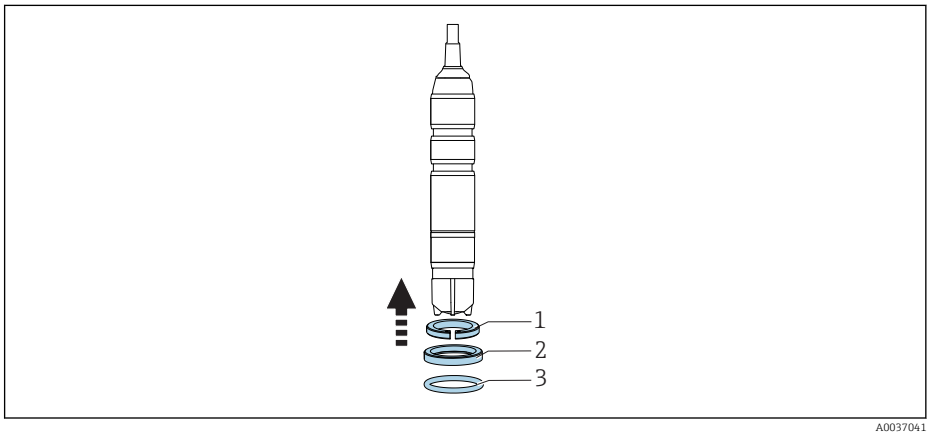

4 Slide clamping ring, thrust collar and O-ring upwards from the membrane cap to the sensor shaft and into the lower groove

Installing sensor in assembly

2. Slide sensor with adapter for Flowfit CCA151 into the opening in the assembly.

3. Screw union nut onto assembly on block.

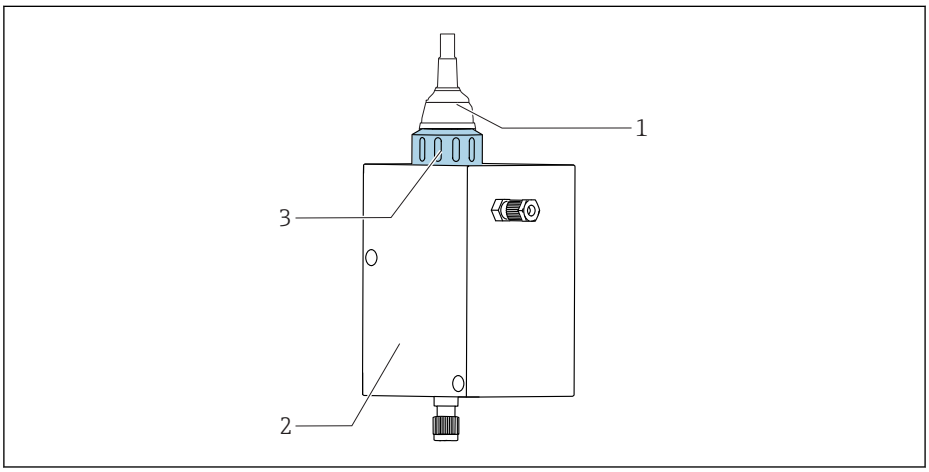

5 *Flowfit CCA151 flow assembly*

1 Disinfection sensor
2 Flowfit CCA151 flow assembly
3 Union nut for securing a disinfection sensor

Installation in Flowfit CCA250 flow assembly

The sensor can be installed in the Flowfit CCA250 flow assembly. It allows a pH and ORP sensor to be installed, in addition to the chlorine or chlorine dioxide sensor. A needle valve regulates the flow in the range of 30 to 120 l/h (7.9 to 30 gal/h).

Please note the following during installation:
- The flow rate must be at least 30 l/h (7.92 gal/h). If the flow drops below this value or stops completely, this can be detected by an inductive proximity switch and used to trigger an alarm with locking of the dosage pumps.
- If the medium is returned to an overflow basin, pipe or similar, the resulting counterpressure on the sensor must not exceed 1 bar (14.5 psi) and must remain constant.
- Negative pressure at the sensor e.g. due to medium being returned to the suction side of a pump, must be avoided.

Equip sensor with adapter

The required adapter can be ordered as a mounted sensor accessory or as a separate accessory.→ 12

1. Slide adapter for Flowfit CCA250 from the sensor head up to the stop on the sensor.

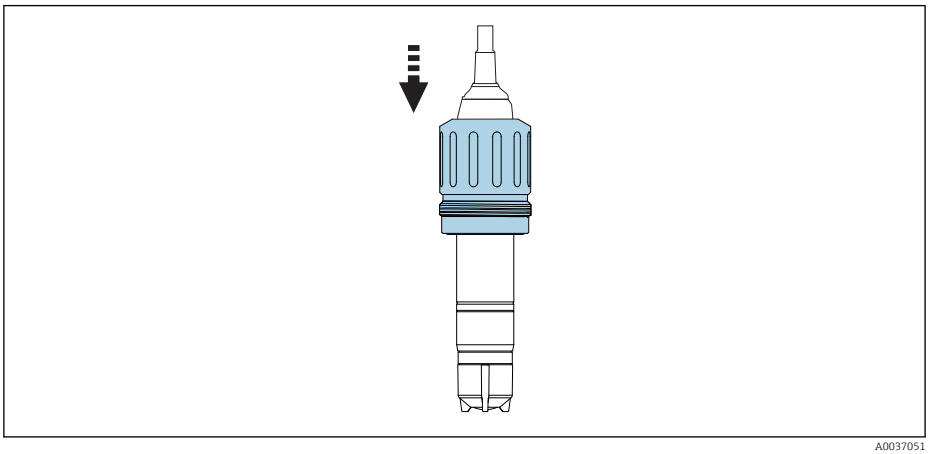

6 *Slide on adapter for Flowfit CCA250.*

2. Lock the adapter in place using the two studs provided.

For detailed information on "Installing sensor in Flowfit CCA250 assembly", see Operating Instructions for assembly

Installation in other flow assemblies

When using other flow assemblies, please ensure the following:
- The flow velocity at the membrane must always be at least 15 cm/s (0.49 ft/s).
- The flow direction is upwards. Transported air bubbles must be removed so that they do not collect in front of the membrane.
- The flow must be directed to the membrane.

Installation in Flexdip CYA112 immersion assembly

Alternatively, the sensor can be installed in an immersion assembly with G1 threaded connection, e. g.

Equip sensor with adapter

The required adapter can be ordered as a mounted sensor accessory or as a separate accessory.→ 12

1. Slide adapter for Flexdip CYA112 from the sensor head up to the stop on the sensor.

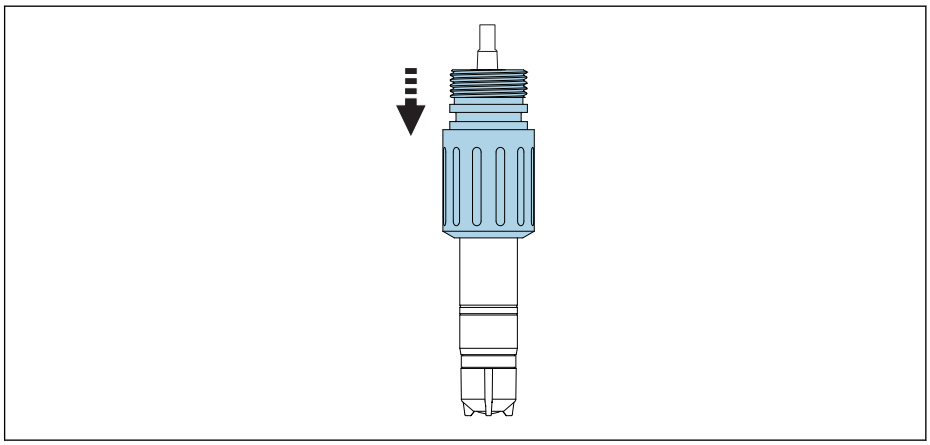

7 Slide on adapter for Flexdip CYA112.

2. Lock the adapter in place using the two studs provided.

For detailed information on "Installing sensor in Flexdip CYA112 assembly", see Operating Instructions for assembly

Environment

Ambient temperature range

-20 to +60 °C (-4 to 140 °F)

Storage temperature

	Longterm storage	Storage up to max 48 h
With electrolyte	+0 to 35 °C (32 to 95 °F) (non-freezing)	35 to 50 °C (95 to 122 °F) (non-freezing)
Without electrolyte	−20 to 60 °C (−4 to 140 °F)	

Degree of protection

IP 68 (1.8 m (5.91 ft)) water column over 7 days at 20 °C (68 °F)

Process

Process temperature

+0 to 55 °C (32 to 130 °F), non-freezing

Process pressure

The inlet pressure depends on the specific fitting and installation.

The measurement can take place with a free outlet.

The medium pressure directly upstream from the sensor membrane must not exceed 1 bar (14.5 psi) abs.

- In terms of sensor condition and performance, it is essential that the flow velocity limits specified in the following table be observed.

	Flow velocity [cm/s]	Volume flow [l/h]		
		Flowfit CCA250	Flowfit CCA151	FlexdipCYA112
Minimum	15	30	5	The sensor is suspended freely in the medium; pay attention to the minimum flow velocity of 15 cm/s during installation.
Maximum	80	145	20	

pH range

Stability range of ClO_2	pH 2 to 10 [1]
Calibration	pH 4 to 8
Measurement	pH 4 to 9

From pH values > 9, ClO_2 is unstable and decomposes.

1) Up to pH 3.5 and in the presence of Cl ions, free chlorine is produced and included in the measurement

Flow

remains stable for a minimum of 5 l/h (1.32 gal/hr), in the Flowfit CCA151 flow assembly

remains stable for a minimum of 30 l/h (8 gal/hr), in the Flowfit CCA250 flow assembly

Minimum flow

remains stable for a minimum of 15 cm/s (0.5 ft/s), e.g. with Flexdip CYA112 immersion assembly

Mechanical construction

Dimensions

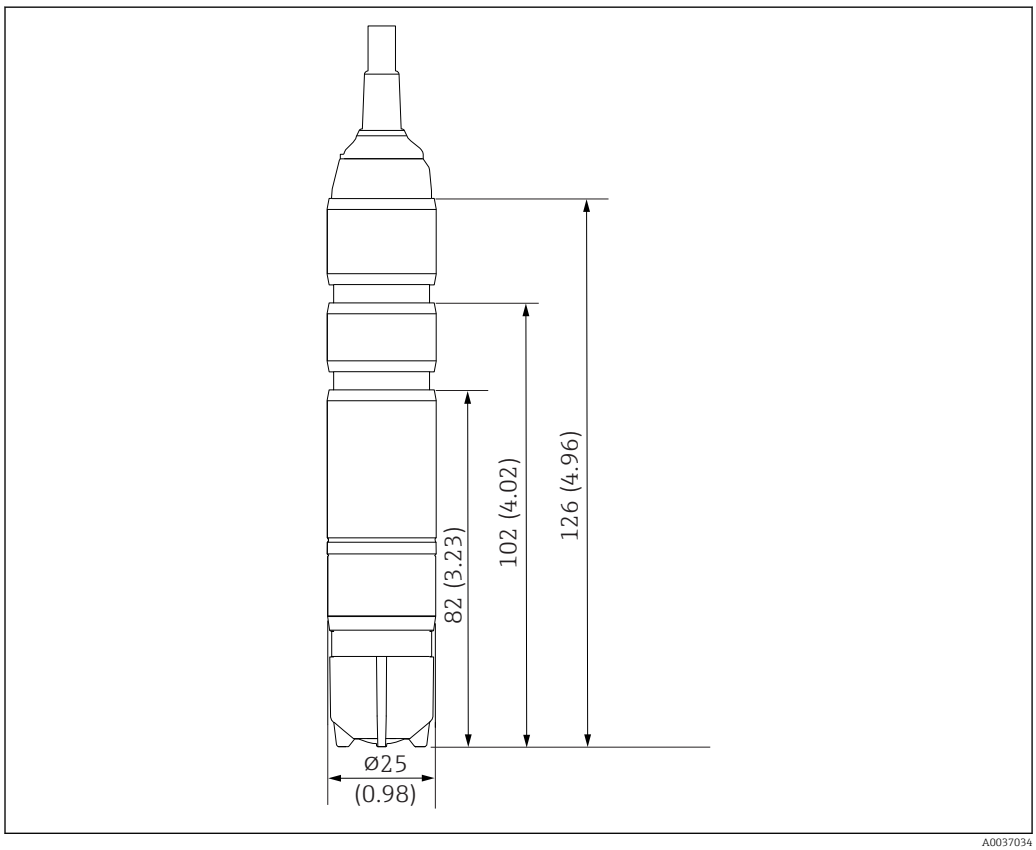

8 Dimensions in mm (in)

Weight

Sensor with membrane cap and electrolyte (without protection cap and without adapter)	Approx. 250 g (8.82 oz)

Materials

Sensor shaft	PVC
Cable sheathing	PVC
Membrane	PVDF
Membrane cap	PVDF
Protection cap	▪ Vessel: PC Makrolon (polycarbonate) ▪ Seal: Kraiburg TPE TM5MED ▪ Cover: PC Makrolon (polycarbonate)
Sealing ring	FKM

Cable specification

max. 3 m (9.84 ft)

Certificates and approvals

CE mark

Declaration of Conformity

The product meets the requirements of the harmonized European standards. As such, it complies with the legal specifications of the EU directives. The manufacturer confirms successful testing of the product by affixing to it the CE mark.

Ordering information

Product page

www.endress.com/ccs50

Product Configurator

On the product page there is a **Configure** button to the right of the product image.

1. Click this button.
   ↳ The Configurator opens in a separate window.
2. Select all the options to configure the device in line with your requirements.
   ↳ In this way, you receive a valid and complete order code for the device.
3. Export the order code as a PDF or Excel file. To do so, click the appropriate button on the right above the selection window.

For many products you also have the option of downloading CAD or 2D drawings of the selected product version. Click the **CAD** tab for this and select the desired file type using picklists.

Scope of delivery

The delivery comprises:
- Disinfection sensor (membrane-covered, Ø25 mm) with protection cap (ready for use)
- Bottle of electrolyte (50 ml (1.69 fl.oz))
- Replacement membrane cap in protection cap
- Operating Instructions

Accessories

The following are the most important accessories available at the time this documentation was issued.

▶ For accessories not listed here, please contact your Service or Sales Center.

Maintenance kit CCV05

Order according to product structure

- 2 x membrane caps and 1 x electrolyte 50 ml (1.69 fl.oz)
- 1 x electrolyte50 ml (1.69 fl.oz)
- 2 x sealing set

Device-specific accessories

Flowfit CCA151
- Flow assembly for chlorine dioxide sensors
- Product Configurator on the product page: www.endress.com/cca151

Technical Information TI01357C

Flowfit CCA250
- Flow assembly for chlorine and pH/ORP sensors
- Product Configurator on the product page: www.endress.com/cca250

Technical Information TI00062C

FlexdipCYA112
- Immersion assembly for water and wastewater
- Modular assembly system for sensors in open basins, channels and tanks
- Material: PVC or stainless steel
- Product Configurator on the product page: www.endress.com/cya112

Technical Information TI00432C

Photometer PF-3
- Compact hand-held photometer for determining free available chlorine
- Color-coded reagent bottles with clear dosing instructions
- Order No.: 71257946

Kit adapter CCS5xD for CCA151
- Clamping ring
- Thrust collar
- O-ring
- Order No. 71372027

Adapter kit CCS5x(D) for CCA250
- Adapter incl. O-rings
- 2 studs for locking in place
- Order No. 71372025

Adapter kit CCS5x(D) for CYA112
- Adapter incl. O-rings
- 2 studs for locking in place
- Order No. 71372026

COY8

Zero-point gel for oxygen and chlorine sensors
- Oxygen-free gel for the validation, calibration and adjustment of oxygen measuring cells
- Product Configurator on the product page: www.endress.com/coy8

Technical Information TI01244C

LENNTECH
Water Treatment Solutions
info@lenntech.com Tel. +31-152-610-900
www.lenntech.com Fax. +31-152-616-289

Endress+Hauser
People for Process Automation