TI00436P/00/EN/32.24-00
71651079
2024-04-01

LENNTECH
WATER TREATMENT SOLUTIONS

Technical Information
Cerabar M
PMC51, PMP51, PMP55

Process pressure measurement
4 to 20 mA, HART, IO-Link, PA, FF







Pressure transmitter with ceramic and metallic measuring cells

Application

The device is used for the following measuring tasks:
- Absolute pressure and gauge pressure measurement in gases, steams or liquids in all areas of process engineering and process measurement technology
- Level, volume or mass measurement in liquids
- High process temperature
  - without diaphragm seals up to 130 °C (266 °F), for a maximum of 60 minutes 150 °C (302 °F)
  - with diaphragm seals up to 400 °C (752 °F)
- High pressure up to 400 bar (6 000 psi)
- International usage thanks to a wide range of approvals

Your benefits

- Very good reproducibility and long-term stability
- High reference accuracy up to ±0.10 %
  as PLATINUM version: ±0.075 %
- Turn down up to 100:1
- Uniform platform for differential pressure, hydrostatics and pressure (Deltabar M – Deltapilot M – Cerabar M)
- Practical user navigation for quick and easy commissioning
- Used for process pressure monitoring up to SIL 2, certified to IEC 61508 Edition 2.0 and IEC 61511 by TÜV NORD
- The patented TempC process membrane for the diaphragm seal reduces the measurement error caused by environmental and process temperature effects to a minimum
- ASME BPE-compliant device versions

Endress+Hauser
People for Process Automation

Table of contents

About this document 4
Document function 4
Symbols used 4
Documentation 4
List of abbreviations 5
Turn down calculation 5

Function and system design 6
Measuring principle 6
Level measurement (level, volume and mass) 7
Electrical differential pressure measurement with gauge pressure measuring cells 7
Communication protocol 8

Input 9
Measured variable 9
Measuring range 9

Output 11
Output signal 11
Signal range 4 to 20 mA 11
Signal on alarm 11
Load - 4 to 20 mA analog 4 to 20 mA HART 12
Load for current output in the case of an IO-Link device . . . 12
Damping 12
Firmware version 13
HART protocol-specific data 13
Wireless HART data 13
IO-Link protocol-specific data 13
Protocol-specific data PROFIBUS PA 14
FOUNDATION Fieldbus protocol-specific data 14

Power supply 17
Terminal assignment 17
Supply voltage 18
Current consumption 18
Electrical connection 18
Terminals 19
Cable entry 19
Connector 19
Cable specification 21
Start-up current 22
Residual ripple 22
Influence of power supply 22
Overvoltage protection (optional) 22

Performance characteristics for measuring instruments with ceramic process membrane 23
Response time 23
Reference operating conditions 23
Total performance 23
Resolution 25
Total error 26
Long-term stability 26
Response time T63 and T90 27
Installation factors 29

Performance characteristics for measuring instruments with metallic process membrane 30
Response time 30
Reference operating conditions 30
Total performance 30
Resolution 33
Total error 33
Long-term stability 34
Response time T63 and T90 34
Installation factors 36

Mounting 37
General installation instructions 37
Measuring arrangement for devices without diaphragm seal – PMC51, PMP51 37
Measuring arrangement for devices with diaphragm seal – PMP55 37
Wall and pipe mounting, transmitter (optional) 38
Wall and pipe-mounting manifold (optional) 38
"Separate housing" version 39
Oxygen applications 40
PWIS cleaning 40
Ultrapure gas applications (PMC51 und PMP51) 40
Applications with hydrogen 40

Environment 41
Ambient temperature range 41
Storage temperature range 41
Climate class 41
Degree of protection 41
Vibration resistance 41
Electromagnetic compatibility 42
Operation in very corrosive environment 42

Process 43
Process temperature range PMC51 43
Process temperature limits 43
Process temperature limits of flexible capillary armoring: PMP55 45
Pressure specifications 46

Mechanical construction 47
Device height 47
F31 housing, aluminum 47
F15 housing, stainless steel (hygienic) 48
Explanation of terms 48
PMC51: height H 48
PMC51: Process connections with internal process membrane 49
PMC51: Process connections with internal process membrane 51
PMC51: Process connections with flush process membrane 52
PMC51: Process connections with flush process membrane 53
PMC51: Process connections with flush process membrane 54

PMC51: Process connections with flush process membrane . . . 57
PMC51 hygienic . . . 58
PMP51: process connections with internal process membrane . . . 63
PMP51: Process connections with internal process membrane . . . 65
PMP51: Process connections with flush process membrane . . . 66
ANSI thread . . . 68
PMP51: Process connections with flush process membrane . . . 69
PMP51: Process connections with flush process membrane . . . 70
PMP51: Process connections with flush process membrane . . . 71
PMP51 hygienic . . . 72
DA63M- valve manifold (optional) . . . 76
PMP51: process connections . . . 77
PMP55 basic device - examples . . . 78
Process connections for PMP55 with flush process membrane . . . 79
Process connections PMP55, flush TempC process membrane . . . 81
PMP55: Process connections with flush process membrane . . . 82
PMP55: Process connections with flush process membrane . . . 83
PMP55: Hygienic process connections with flush process membrane . . . 84
PMP55: Hygienic process connections with flush process membrane . . . 85
PMP55: Process connections with flush process membrane . . . 91
PMP55: Process connections with flush process membrane . . . 94
PMP55 process connections . . . 98
Wall and pipe mounting with mounting bracket . . . 101
Reduction in installation height . . . 102
Weight . . . 102
Flushing rings . . . 103
Materials not in contact with process . . . 104
Materials in contact with process . . . 107
Seals . . . 108
Fill fluid . . . 108

Operability . . . 110
Operating concept . . . 110
Local operation . . . 110
Operating languages . . . 113
Remote operation . . . 114
System integration (except analog electronics) . . . 115

Planning instructions for diaphragm seal systems . . . 117
Applications . . . 117
Design and operation mode . . . 118
Diaphragm seal fill fluid . . . 119
Operating temperature range . . . 120
Information on cleaning . . . 120
Installation instructions . . . 120
Vacuum applications . . . 121

Certificates and approvals . . . 123
CE mark . . . 123
RoHS . . . 123
RCM marking . . . 123
Ex approvals . . . 123
Corrosion test . . . 123
EAC conformity . . . 123
Suitable for hygiene applications . . . 123
Certificate of current Good Manufacturing Practices (cGMP) . . . 123
Certificate of Compliance ASME BPE 2012 . . . 123
Functional safety SIL . . . 124
CRN approval . . . 124
AD2000 . . . 124
Pressure Equipment Directive 2014/68/EU (PED) . . . 124
Classification of process sealing between electrical systems and (flammable or combustible) process fluids in accordance with ANSI/ ISA 12.27.01 . . . 125
Inspection certificate . . . 125

Ordering information . . . 126
Special device versions . . . 126
Scope of delivery . . . 126
Measuring point (TAG) . . . 126
Configuration data sheet (HART, IO-Link, PROFIBUS PA, FOUNDATION Fieldbus electronics) . . . 126
Configuration data sheet (Analog electronics) . . . 129

Supplementary documentation . . . 130
Standard documentation . . . 130
Supplementary device-dependent documentation . . . 130
Field of Activities . . . 130
Safety instructions . . . 130
Special Documentation . . . 130

Accessories . . . 131
Manifolds . . . 131
Additional mechanical accessories . . . 131
Welding necks and weld-in adapters . . . 131
Mounting bracket for wall and pipe mounting . . . 132
M12 connector . . . 132
Service-specific accessories . . . 132

Registered trademarks . . . 132

About this document

Document function

The document contains all the technical data on the device and provides an overview of the accessories and other products that can be ordered for the device.

Symbols used

Safety symbols

Symbol	Meaning
DANGER	**DANGER!** This symbol alerts you to a dangerous situation. Failure to avoid this situation will result in seriousor fatal injury.
WARNING	**WARNING!** This symbol alerts you to a dangerous situation. Failure to avoid this situation can result in seriousor fatal injury.
CAUTION	**CAUTION!** This symbol alerts you to a dangerous situation. Failure to avoid this situation can result in minoror medium injury.
NOTICE	**NOTICE!** This symbol contains information on procedures and other facts which do not result in personalinjury.

Electrical symbols

Symbol	Meaning	Symbol	Meaning
⏚	**Protective ground connection** A terminal which must be connected to ground prior to establishing any other connections.	⏚	**Ground connection** A grounded terminal which, as far as the operator is concerned, is grounded via a grounding system.

Symbols for certain types of information

Symbol	Meaning
✓	**Permitted** Procedures, processes or actions that are permitted.
✗	**Forbidden** Procedures, processes or actions that are forbidden.
ℹ	**Tip** Indicates additional information.
👁	Visual inspection

Symbols in graphics

Symbol	Meaning
1, 2, 3 ...	Item numbers
1. , 2. , 3. ...	Series of steps
A, B, C, ...	Views
A-A, B-B, C-C, ...	Sections

Documentation

See chapter "Additional documentation" → 130

The document types listed are available:
In the Download Area of the Endress+Hauser Internet site: www.endress.com → Download

List of abbreviations

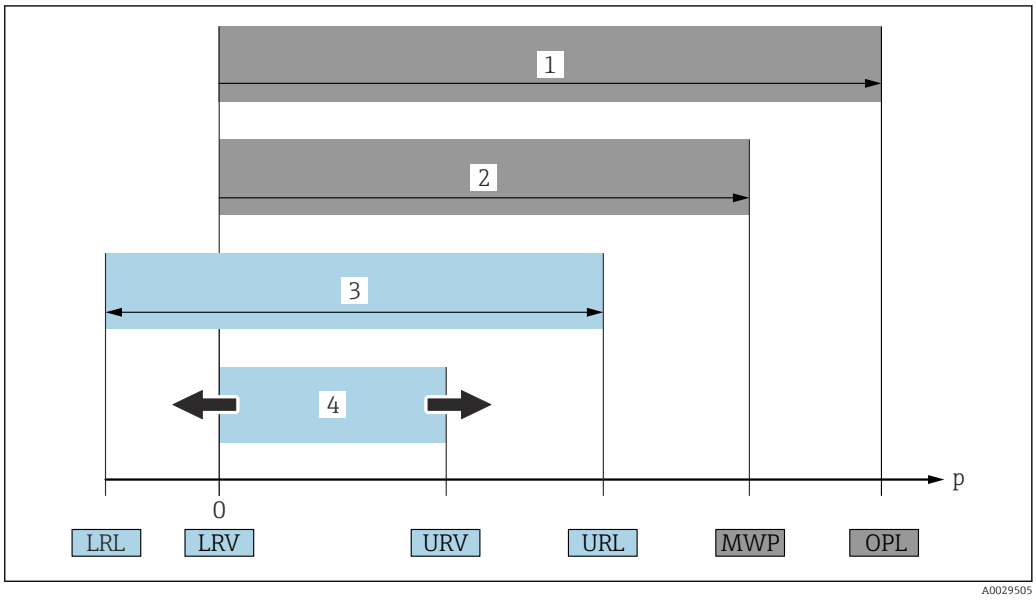

1 *OPL: The OPL (overpressure limit = measuring cell overload limit) for the device depends on the lowest-rated element, with regard to pressure, of the selected components, i.e. the process connection has to be taken into consideration in addition to the measuring cell. Observe pressure-temperature dependency.*
2 *MWP: The MWP (maximum working pressure) for the measuring cells depends on the lowest-rated element, with regard to pressure, of the selected components, i.e. the process connection has to be taken into consideration in addition to the measuring cell. Observe pressure-temperature dependency. The MWP may be applied at the device for an unlimited period of time. The MWP can be found on the nameplate.*
3 *The maximum measuring range corresponds to the span between the LRL and URL. This measuring range is equivalent to the maximum calibratable/adjustable span.*
4 *The calibrated/adjusted span corresponds to the span between the LRV and URV. Factory setting: 0 to URL. Other calibrated spans can be ordered as customized spans.*
p Pressure
LRL Lower range limit
URL Upper range limit
LRV Lower range value
URV Upper range value
TD Turn down. Example - see the following section.

Turn down calculation

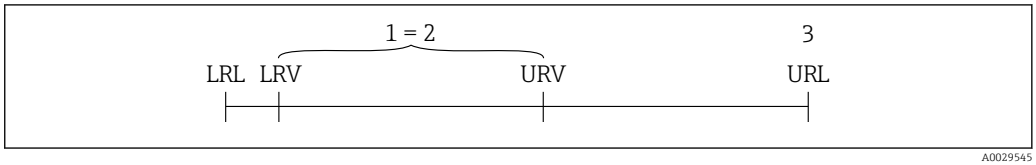

1 *Calibrated/adjusted span*
2 *Zero point-based span*
3 *Upper range limit*

Example:
- Measuring cell: 10 bar (150 psi)
- Upper range limit (URL) = 10 bar (150 psi)
- Calibrated/adjusted span: 0 to 5 bar (0 to 75 psi)
- Lower range value (LRV) = 0 bar (0 psi)
- Upper range value (URV) = 5 bar (75 psi)

$$TD = \frac{URL}{|URV - LRV|}$$

In this example, the TD is 2:1. This span is based on the zero point.

Function and system design

Measuring principle

Ceramic process membrane used in PMC51 (Ceraphire®)

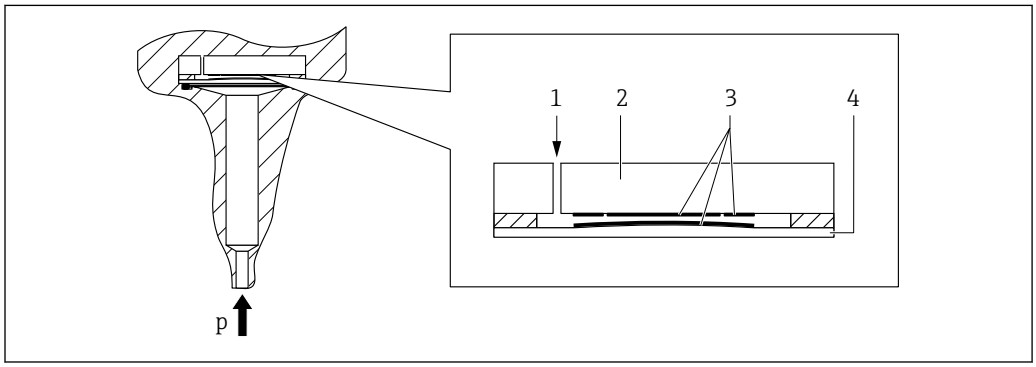

A0020465

1 Atmospheric pressure (gauge pressure measuring cell)
2 Ceramic substrate
3 Electrodes
4 Ceramic process membrane

The ceramic measuring cell is oil-free, i.e., the pressure acts directly on the robust ceramic process membrane and causes it to deflect. A pressure-dependent change in capacitance is measured at the electrodes of the ceramic substrate and the process membrane. The measuring range is determined by the thickness of the ceramic process membrane.

Advantages:
- Guaranteed overload resistance up to 40 times the nominal pressure
- Thanks to ultrapure 99.9 % ceramic (Ceraphire®, see also "www.endress.com/ceraphire")
  - extremely high chemical stability, comparable with Alloy C
  - high mechanical stability
- Can be used in absolute vacuum

Metallic process membrane used in PMP51 and PMP55

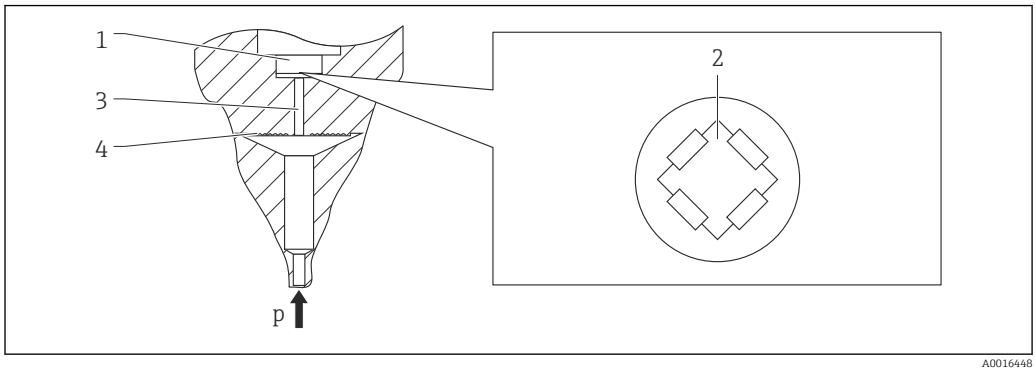

A0016448

1 Silicon measuring element, substrate
2 Wheatstone bridge
3 Channel with fill fluid
4 Metallic process membrane

PMP51

The process pressure deflects the process membrane and a fill fluid transfers the pressure to a resistance bridge (semi-conductor technology). The pressure-dependent change in the bridge output voltage is measured and evaluated.

Advantages:
- Can be used for process pressures up to 400 bar (6 000 psi)
- High long-term stability
- Guaranteed overload resistance up to 4 times the nominal pressure
- Significantly less thermal effect compared to diaphragm seal systems

PMP55

The static pressure acts on the process membrane of the diaphragm seal and is transferred to the membrane of the measuring cell by a diaphragm seal fill fluid. The membrane is deflected and a fill fluid transfers the pressure to a resistance bridge. The pressure-dependent change in the bridge output voltage is measured and evaluated.

Advantages:
- Depending on the version, can be used for process pressures up to 400 bar (6 000 psi) and for extreme process temperatures
- High long-term stability
- Guaranteed overload resistance up to 4 times the nominal pressure

Level measurement (level, volume and mass)

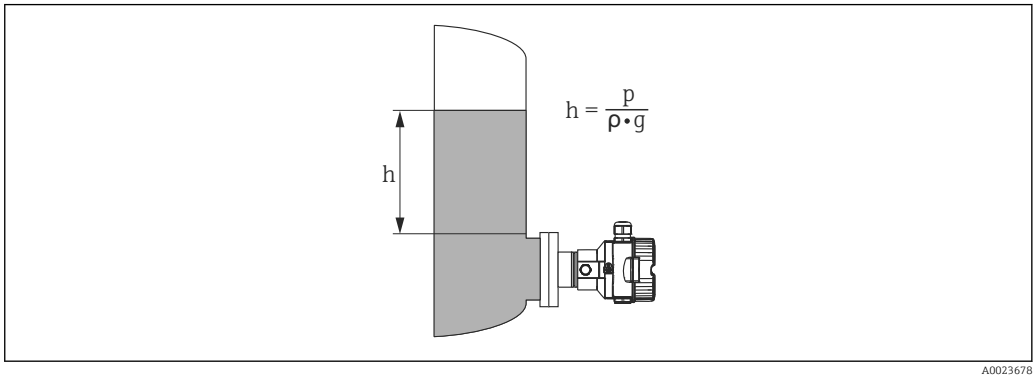

A0023678

h Height (level)
p Pressure
ρ Density of the medium
g Gravitation constant

Your benefits

- Choice of different level measuring modes in the device software
- Volume and mass measurements in any tank shapes by means of a freely programmable characteristic curve
- Choice of diverse level units
- Has a wide range of uses, even in the following cases:
  - in the event of foam formation
  - in tanks with agitators of screen fittings
  - in the event of liquid gases

Electrical differential pressure measurement with gauge pressure measuring cells

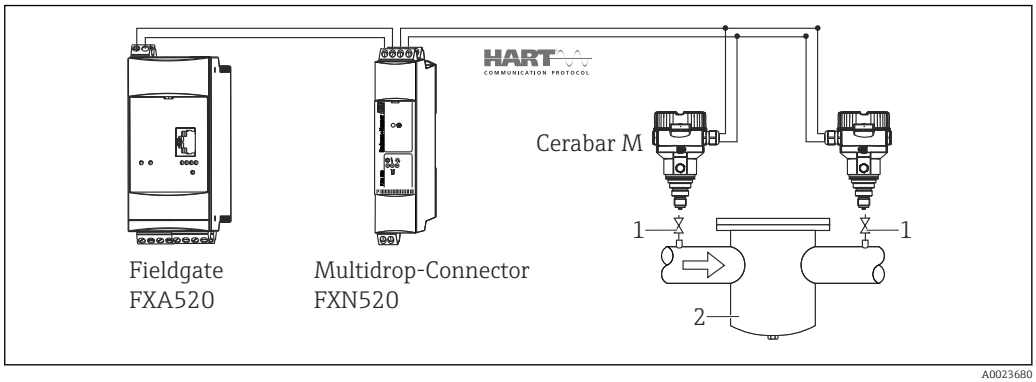

A0023680

1 Shutoff valves
2 e.g. filter

In the example given, two Cerabar M devices (each with a gauge pressure measuring cell) are interconnected. The differential pressure can thus be measured using two independent Cerabar M devices.

⚠ WARNING

Explosion Hazard!

- ▶ If using intrinsically safe devices, strict compliance with the rules for interconnecting intrinsically safe circuits as stipulated in IEC60079-14 (proof of intrinsic safety) is mandatory.

Communication protocol

- 4 to 20 mA without communication protocol (analog electronics)
- 4 to 20 mA with HART communication protocol
- 4 to 20 mA with IO-Link communication protocol
- PROFIBUS PA
  - The Endress+Hauser devices meet the requirements of the FISCO model.
  - Due to a low current consumption of 11 mA ± 1 mA, the following number of devices can be operated on one bus segment if installing as per FISCO: up to 8 devices for Ex ia, CSA IS and FM IS applications or up to 31 devices for all other applications e.g. in non-hazardous areas, Ex nA etc. Further information on PROFIBUS PA can be found in Operating Instructions BA00034S "PROFIBUS DP/PA: Guidelines for planning and commissioning" and in the PNO Guideline.
- FOUNDATION Fieldbus
  - The Endress+Hauser devices meet the requirements of the FISCO model.
  - Due to a low current consumption of 16 mA ± 1 mA, the following number of devices can be operated on one bus segment if installing as per FISCO: up to 6 devices for Ex ia, CSA IS and FM IS applications or up to 22 devices for all other applications e.g. in non-hazardous areas, Ex nA etc. Further information on FOUNDATION Fieldbus, such as requirements for bus system components, can be found in Operating Instructions BA00013S "FOUNDATION Fieldbus Overview".

Input

Measured variable

Measured process variables

- Analog electronics: Absolute pressure and gauge pressure
- HART, PROFIBUS PA, FOUNDATION Fieldbus: Absolute and gauge pressure from which level (level, volume or mass) is derived
- IO-Link: Pressure and level

Measuring range

PMC51 - with ceramic process membrane (Ceraphire®) for gauge pressure

Measuring cell	Maximum measuring range		Lowest calibratable measuring span [1]	MWP	OPL	Vacuum resistance	Option [2]
	lower (LRL)	upper (URL)					
	[bar (psi)]	[bar (psi)]	[bar (psi)]	[bar (psi)]	[bar (psi)]	[bar_{abs} (psi_{abs})]	
100 mbar (1.5 psi)	−0.1 (−1.5)	+0.1 (+1.5)	0.01 (0.15)	2.7 (40.5)	4 (60)	0.7 (10.5)	1C
250 mbar (3.75 psi)	−0.25 (−3.75)	+0.25 (+3.75)	0.01 (0.15)	3.3 (49.5)	5 (75)	0.5 (7.5)	1E
400 mbar (6 psi)	−0.4 (−6)	+0.4 (+6)	0.02 (0.3)	5.3 (79.5)	8 (120)	0	1F
1 bar (15 psi)	−1 (−15)	+1 (+15)	0.05 (1)	6.7 (100.5)	10 (150)	0	1H
2 bar (30 psi)	−1 (−15)	+2 (+30)	0.1 (1.5)	12 (180)	18 (270)	0	1K
4 bar (60 psi)	−1 (−15)	+4 (+60)	0.2 (3)	16.7 (250.5)	25 (375)	0	1M
10 bar (150 psi)	−1 (−15)	+10 (+150)	0.5 (7.5)	26.7 (400.5)	40 (600)	0	1P
40 bar (600 psi)	−1 (−15)	+40 (+600)	2 (30)	40 (600)	60 (900)	0	1S

1) Highest factory-configurable turn down: 20:1, higher available on request or can be set in device.
2) Product Configurator, order code for "Sensor range"

PMC51 - with ceramic process membrane (Ceraphire®) for absolute pressure

Measuring cell	Maximum measuring range		Lowest calibratable measuring span [1]	MWP	OPL	Vacuum resistance	Option [2]
	lower (LRL)	upper (URL)					
	[bar_{abs} (psi_{abs})]	[bar_{abs} (psi_{abs})]	[bar (psi)]	[bar_{abs} (psi_{abs})]	[bar_{abs} (psi_{abs})]	[bar_{abs} (psi_{abs})]	
100 mbar (1.5 psi)	0	+0.1 (+1.5)	0.01 (0.15)	2.7 (40.5)	4 (60)	0	2C
250 mbar (3.75 psi)	0	+0.25 (+3.75)	0.01 (0.15)	3.3 (49.5)	5 (75)	0	2E
400 mbar (6 psi)	0	+0.4 (+6)	0.02 (0.3)	5.3 (79.5)	8 (120)	0	2F
1 bar (15 psi)	0	+1 (+15)	0.05 (1)	6.7 (100.5)	10 (150)	0	2H
2 bar (30 psi)	0	+2 (+30)	0.1 (1.5)	12 (180)	18 (270)	0	2K
4 bar (60 psi)	0	+4 (+60)	0.2 (3)	16.7 (250.5)	25 (375)	0	2M
10 bar (150 psi)	0	+10 (+150)	0.5 (7.5)	26.7 (400.5)	40 (600)	0	2P
40 bar (600 psi)	0	+40 (+600)	2 (30)	40 (600)	60 (900)	0	2S

1) Highest factory-configurable turn down: 20:1, higher available on request or can be set in device.
2) Product Configurator, order code for "Sensor range"

PMP51 and PMP55 – metallic process membrane for gauge pressure

Measuring cell	Maximum measuring range		Lowest calibratable measuring span [1]	MWP	OPL	Vacuum resistance [2]	Option [3]
	lower (LRL)	upper (URL)				Silicone oil/ Inert oil/ Synthetic oil	
	[bar (psi)]	[bar (psi)]	[bar (psi)]	[bar (psi)]	[bar (psi)]	[bar_{abs} (psi_{abs})]	
400 mbar (6 psi)	−0.4 (−6)	+0.4 (+6)	0.02 (0.3)	4 (60)	6 (90)	0.01/0.04/0.01 (0.15/0.6/0.15)	1F
1 bar (15 psi)	−1 (−15)	+1 (+15)	0.05 (1)	6.7 (100)	10 (150)		1H
2 bar (30 psi)	−1 (−15)	+2 (+30)	0.1 (1.5)	13.3 (200)	20 (300)		1K
4 bar (60 psi)	−1 (−15)	+4 (+60)	0.2 (3)	18.7 (280.5)	28 (420)		1M
10 bar (150 psi)	−1 (−15)	+10 (+150)	0.5 (7.5)	26.7 (400.5)	40 (600)		1P
40 bar (600 psi)	−1 (−15)	+40 (+600)	2 (30)	100 (1500)	160 (2400)		1S
100 bar (1500 psi)	−1 (−15)	+100 (+1500)	5 (75)	100 (1500)	400 (6000)		1U
400 bar (6000 psi)	−1 (−15)	+400 (+6000)	20 (300)	400 (6000)	600 (9000)		1W

1) Highest factory-configurable turn down: 20:1, higher available on request or can be set in device.
2) The vacuum resistance applies to the measuring cell under reference operating conditions. A ceramic process membrane is recommended for applications in the limit range. The pressure and temperature application limits of the selected fill fluid must also be observed for the PMP55 → 🖹 119.
3) Product Configurator, order code for "Sensor range"

PMP51 and PMP55 – metallic process membrane for absolute pressure

Measuring cell	Maximum measuring range [1]		Lowest calibratable measuring span [2]	MWP	OPL	Vacuum resistance [3]	Option [4]
	lower (LRL)	upper (URL)				Silicone oil/ Inert oil/ Synthetic oil	
	[bar_{abs} (psi_{abs})]	[bar_{abs} (psi_{abs})]	[bar (psi)]	[bar_{abs} (psi_{abs})]	[bar_{abs} (psi_{abs})]	[bar_{abs} (psi_{abs})]	
400 mbar (6 psi)	0	+0.4 (+6)	0.02 (0.3)	4 (60)	6 (90)	0.01/0.04/0.01 (0.15/0.6/0.15)	2F
1 bar (15 psi)	0	+1 (+15)	0.05 (1)	6.7 (100)	10 (150)		2H
2 bar (30 psi)	0	+2 (+30)	0.1 (1.5)	13.3 (200)	20 (300)		2K
4 bar (60 psi)	0	+4 (+60)	0.2 (3)	18.7 (280.5)	28 (420)		2M
10 bar (150 psi)	0	+10 (+150)	0.5 (7.5)	26.7 (400.5)	40 (600)		2P
40 bar (600 psi)	0	+40 (+600)	2 (30)	100 (1500)	160 (2400)		2S
100 bar (1500 psi)	0	+100 (+1500)	5 (75)	100 (1500)	400 (6000)		2U
400 bar (6000 psi)	0	+400 (+6000)	20 (300)	400 (6000)	600 (9000)		2W

1) PMP55: Within the measuring range, the minimum upper range value of 80 $mbar_{abs}$ (1.16 psi_{abs}) must be observed.
2) Highest factory-configurable turn down: 20:1, higher available on request or can be set in device.
3) The vacuum resistance applies to the measuring cell under reference operating conditions. A ceramic process membrane is recommended for applications in the limit range. The pressure and temperature application limits of the selected fill fluid must also be observed for the PMP55 → 🖹 119.
4) Product Configurator, order code for "Sensor range"

Output

Output signal

- 4 to 20 mA analog, 2-wire
- 4 to 20 mA with superimposed digital communication protocol HART 6.0, 2-wire
- Digital communication IO-Link, 3-wire
- Digital communication signal PROFIBUS PA (Profile 3.02)
- Digital communication signal FOUNDATION Fieldbus

Output	Option [1]
4 to 20mA	1
4 to 20mA HART	2
4 to 20mA, IO-Link	7
PROFIBUS PA	3
FOUNDATION Fieldbus	4

1) Product Configurator, order code for "Output"

Signal range 4 to 20 mA

4 to 20 mA analog, 4 to 20 mA HART and IO-Link: 3.8 to 20.5 mA

Signal on alarm

As per NAMUR NE 43

- 4 to 20 mA analog:
  - Signal over-range: > 20.5 mA
  - Signal under-range: < 3.8 mA
  - Min. alarm (3.6 mA)
- 4 to 20 mA HART:
  Options:
  - Max. alarm: can be set from 21 to 23 mA (factory setting: 22 mA)
  - Hold measured value: last measured value is held
  - Min. alarm: 3.6 mA
- IO-Link:
  - Max. alarm: permanently set to 22 mA
  - Min. alarm: 3.6 mA
  - Hold measured value: last measured value is held
- PROFIBUS PA: can be set in the Analog Input block
  Options: Last Valid Out Value (factory setting), Fail-safe Value, Status Bad
- FOUNDATION Fieldbus: can be set in the Analog Input block
  Options: Last Good Value, Fail-safe Value (factory setting), Wrong Value

Load - 4 to 20 mA analog 4 to 20 mA HART

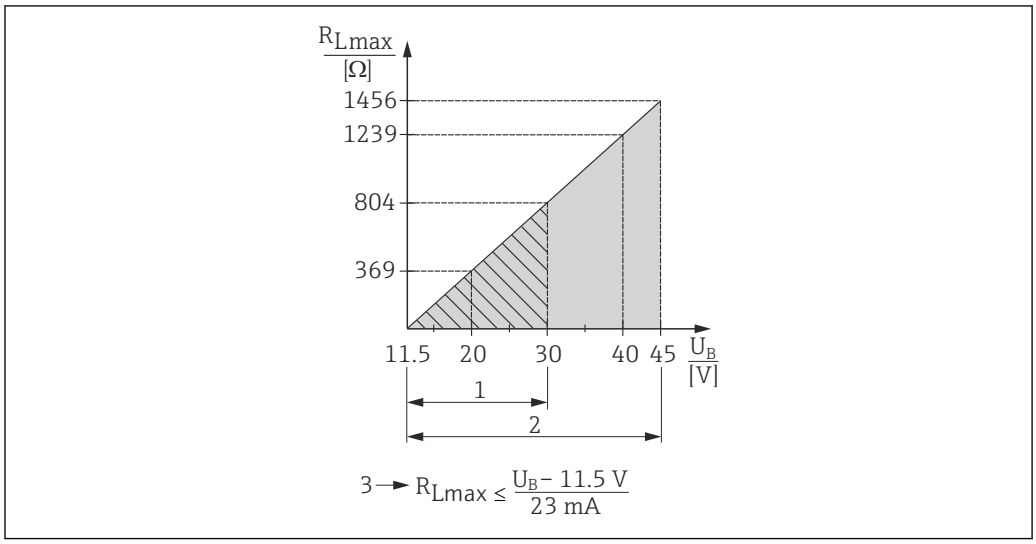

A0023090

1 Supply voltage 11.5 to 30 V DC for intrinsically safe device versions (not for analog)
2 Supply voltage 11.5 to 45 V DC (versions with plug-in connector 35 V DC) for other types of protection and for uncertified device versions
3 R_{Lmax} maximum load resistance
U_B Supply voltage

When operating via a handheld terminal or via a PC with an operating program, a minimum communication resistance of 250 Ω must be taken into account.

Load for current output in the case of an IO-Link device

In order to guarantee sufficient terminal voltage, a maximum load resistance R_L (including line resistance) must not be exceeded depending on the supply voltage U_B of the supply unit.

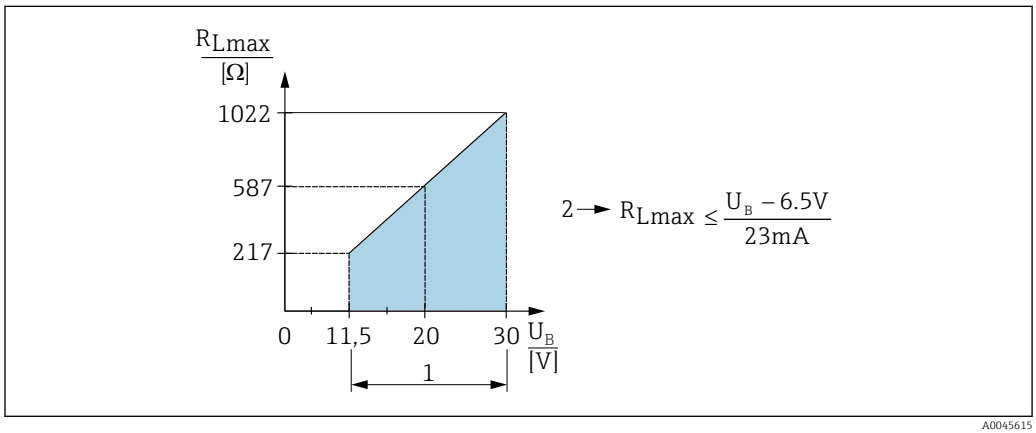

A0045615

1 Power supply 11.5 to 30 V_{DC}
2 R_{Lmax} maximum load resistance
U_B Supply voltage

If the load is too high, the device performs the following points:
- Output of failure current and display of "M803" (Output: MIN alarm current)
- Periodic checking to establish if it is possible to quit fault state

Damping

A damping affects all outputs (output signal, display):
- Via local display (not analog), handheld terminal or PC with operating program continuously from 0 to 999 s
- Via the DIP switch on the electronic insert (not IO-Link), "on" (= set value) and "off" (= damping switched off)
- Factory setting: 2 s

Firmware version

Designation	Option [1]
01.00.zz, FF, DevRev01	76
01.00.zz, PROFIBUS PA, DevRev01	77
01.00.zz, HART, DevRev01	78

1) Product Configurator, "Firmware version" ordering feature

HART protocol-specific data

Manufacturer ID	17 (11 hex)
Device type ID	25 (19 hex)
Device revision	01 (01 hex) - SW version 01.00.zz
HART specification	6
DD revision	▪ 01 (Dutch)) ▪ 02 (Russian))
Device description files (DTM, DD)	Information and files under: ▪ www.endress.com ▪ www.fieldcommgroup.org/registered-products
HART load	Min. 250 Ω
HART device variables	The following measured values are assigned to the device variables: **Measured values for PV (primary variable)** ▪ Pressure ▪ Level ▪ Tank content **Measured values for SV, TV (second and third variable)** ▪ Pressure ▪ Level **Measured values for QV (fourth device variable)** Temperature
Supported functions	▪ Burst mode ▪ Additional transmitter status ▪ Device locking ▪ Alternative modes of operation

Wireless HART data

Minimum starting voltage	11.5 V [1]
Start-up current	12 mA (default) or 22 mA (customer setting)
Starting time	5 s
Minimum operating voltage	11.5 V [1]
Multidrop current	4 mA
Time for connection setup	1 s

1) Or higher if operating near ambient temperature limits (−40 to +85 °C (−40 to +185))

IO-Link protocol-specific data

IO-Link is a point-to-point connection for communication between the device and an IO-Link master. The IO-Link communication interface enables direct access to the process and diagnostic data. It also provides the option of configuring the device while in operation.

The device supports the following features:

IO-Link specification	Version 1.1
IO-Link Smart Sensor Profile 2nd Edition	Supported: ▪ Identification ▪ Diagnosis ▪ Digital Measuring Sensor (as per SSP 4.3.3)
IO-Link transfer rate	COM2; 38.4 kBaud
Minimum cycle time	10 ms

Process data width	14 bytes process data 2 bytes diagnostic data
IO-Link data storage	Yes
Block configuration according to V1.1	Yes
Device operational	5 s after the supply voltage is applied, the device is operational (first valid measured value after 2 s)

Device description

In order to integrate field devices into a digital communication system, the IO-Link system requires a description of the device parameters such as output data, input data, data format, quantity of data and supported IO-Link transfer rate.

These data are contained in the device description (IODD [1)]) which is made available to the IO-Link master via generic modules during commissioning of the communication system.

The IODD can be downloaded as follows:
- Endress+Hauser: www.endress.com
- IODDfinder: https://ioddfinder.io-link.com/#/

Protocol-specific data PROFIBUS PA

Manufacturer ID	17 (11 hex)
Ident number	1554 hex
Profile Version	3.02 SW Version 01.00.zz
GSD Revision	5
DD Revision	1
GSD File DD Files	Information and files can be found: ▪ www.endress.com ▪ www.profibus.org
Output values	**Measured values for PV (via Analog Input Function Block)** ▪ Pressure ▪ Level ▪ Tank content **Measured values for SV** ▪ Pressure ▪ Temperature
Input values	Input value sent from PLC, can be shown on display
Supported functions	▪ Identification & Maintenance Simple device identification via control system and nameplate ▪ Condensed status ▪ Automatic ident number adaptation and switchable to following ident numbers: ▪ 9700: Profile-specific transmitter identification number with the "Classic" or "Condensed" status. ▪ 151C: Compatibility mode for the old Cerabar M (PMC41, PMC45, PMP41, PMP45, PMP46, PMP48). ▪ 1553: Identification number for the new Cerabar M (PMC51, PMP51 , PMP55). ▪ Device locking: The device can be locked by hardware or software.

FOUNDATION Fieldbus protocol-specific data

Device type	0x1019
Device revision	01 (hex)
DD revision	0x01021

1) IO Device Description

Device description files (DTM, DD)	Information and files under: ▪ www.endress.com ▪ www.fieldcommgroup.org/registered-products
CFF revision	0x000102
ITK version	5.2.0
ITK certification driver no.	IT067700
Link Master functionality supported (LAS)	Yes
Link Master/Basic Device selectable	Yes; Factory setting: Basic Device
Number of VCRs	44
Number of link objects in VFD	50
Number of FB schedule objects	40

Virtual communication references (VCRs)

Permanent entries	44
Client VCRs	0
Server VCRs	5
Source VCRs	8
Sink VCRs	0
Subscriber VCRs	12
Publisher VCRs	19

Link settings

Slot time	4
Min. inter PDU delay	12
Max. response delay	40

Transducer Blocks

Block	Content	Output values
TRD1 Block	Contains all parameters related to the measurement	▪ Pressure or level (channel 1) ▪ Process temperature (channel 2) ▪ Measured pressure value (channel 3) ▪ Max. pressure (channel 4) ▪ Level before linearization (channel 5)
Diagnostic Block	Contains diagnostic information	Error code via DI channels (channel 10 to 15)
Display Block	Contains parameters to configure the onsite display	No output values

Function blocks

Block	Content	Number of blocks	Execution time	Functionality
Resource Block	The Resource Block contains all the data that uniquely identify the device. It is an electronic version of a nameplate of the device.	1		Enhanced
Analog Input Block 1 Analog Input Block 2	The AI Block receives the measuring data from the Sensor Block, (selectable via a channel number) and makes the data available to other function blocks at its output. Enhancement: digital outputs for process alarms, fail safe mode.	2	25 ms	Enhanced
Digital Input Block	This block contains the discrete data of the Diagnostic Block (selectable via a channel number 10 to 15) and provides them for other blocks at the output.	1	20 ms	Standard
Digital Output Block	This block converts the discrete input and thus initiates an action (selectable via a channel number) in the DP Flow Block or in the TRD1 Block. Channel 20 resets the counter for max. pressure transgressions value.	1	20 ms	Standard
PID Block	The PID Block serves as a proportional-integral-derivative controller and is used almost universally for closed-loop-control in the field including cascade and feedforward. Input IN can be indicated on the display. The selection is performed in the Display Block (DISPLAY_MAIN_LINE_CONTENT).	1	40 ms	Standard
Arithmetic Block	This block is designed to permit simple use of popular measurement math functions. The user does not have to know how to write equations. The math algorithm is selected by name, chosen by the user for the function to be performed.	1	35 ms	Standard
Input Selector Block	The Input Selector Block facilitates the selection of up to four inputs and generates an output based on the configured action. This block normally receives its inputs from AI Blocks. The block performs maximum, minimum, average and 'first good' signal selection. Inputs IN1 to IN4 can be indicated on the display. The selection is performed in the Display Block (DISPLAY_MAIN_LINE_1_CONTENT).	1	30 ms	Standard
Signal Characterizer Block	The Signal Characterizer Block has two sections, each with an output that is a non-linear function of the respective input. The non-linear function is generated by a single look-up table with 21 arbitrary x-y pairs.	1	40 ms	Standard
Integrator Block	The Integrator Block integrates a variable as a function of the time or accumulates the counts from a Pulse Input Block. The block may be used as a totalizer that counts up until reset or as a batch totalizer that has a setpoint, where the integrated value or accumulated value is compared to pre-trip and trip settings, generating a binary signal when the setpoint is reached.	1	35 ms	Standard

Additional function block information:

Instantiate function blocks	Yes
Number of additional instantiate function blocks	20

Power supply

⚠ WARNING

Limitation of electrical safety due to incorrect connection!

- When using the measuring device in hazardous areas, installation must comply with the corresponding national standards and regulations and the Safety Instructions or Installation or Control Drawings .
- All explosion protection data are given in separate Ex documentation, which is available upon request. The Ex documentation is supplied as standard with all Ex devices .
- In accordance with IEC/EN61010 a suitable circuit breaker must be provided for the device.
- HART: Overvoltage protection HAW569-DA2B for the non-hazardous area, ATEX II 2 (1) Ex ia IIC and IEC Ex ia can be ordered as an option (see "Ordering information" section).
- Protective circuits against reverse polarity, HF influences and overvoltage peaks are integrated.

Terminal assignment

Analog, HART, PROFIBUS PA, FOUNDATION Fieldbus

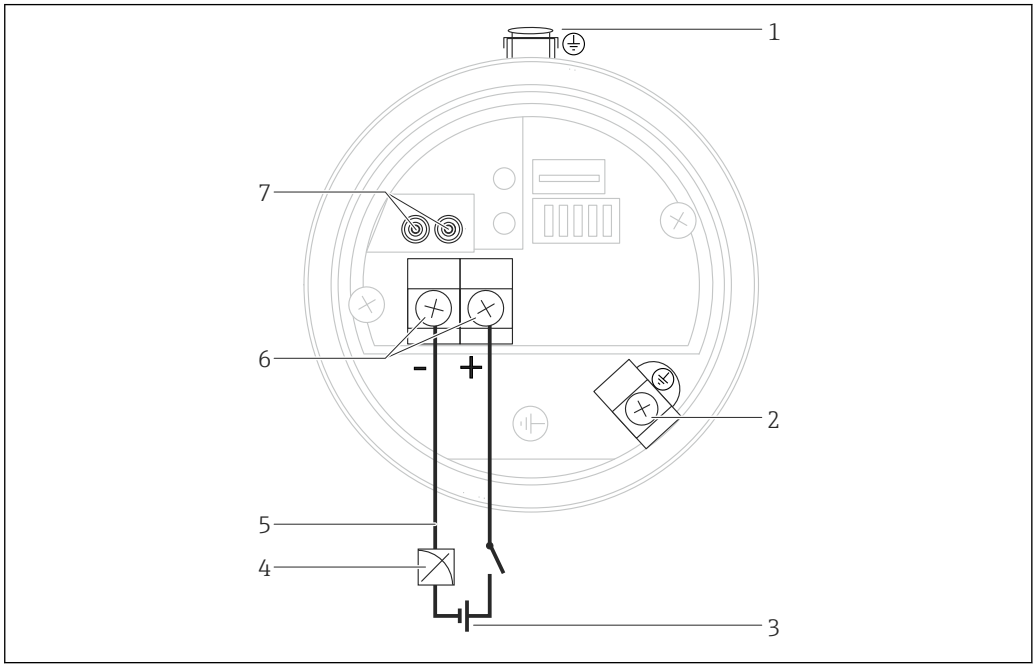

A0023505

1 *External ground terminal (only for devices with certain approvals or if "Measuring point" (TAG) is ordered)*
2 *Internal ground terminal*
3 *Supply voltage → 🖹 18*
4 *4 to 20 mA for HART devices*
5 *For HART and FOUNDATION Fieldbus devices: With a handheld terminal, all the parameters can be configured anywhere along the bus line via menu operation.*
6 *Terminals*
7 *For HART devices: test terminals, see section "Taking 4 to 20 mA test signal" → 🖹 18*

IO-Link

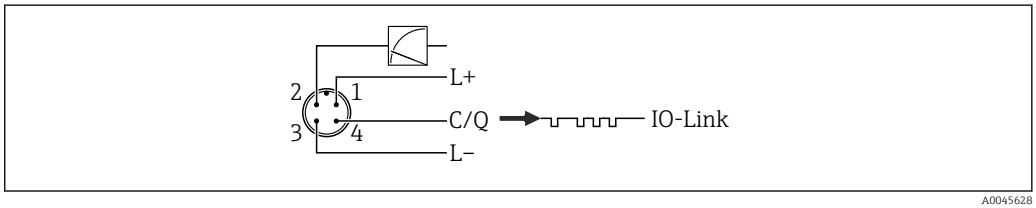

A0045628

1 *Supply voltage +*
2 *4-20 mA*
3 *Supply voltage -*
4 *C/Q (IO-Link communication)*

Supply voltage

4 to 20 mA

Electronic version	
4 to 20 mA	11.5 to 45 V DC (versions with 35 V DC plug-in connection)

Measuring a 4 to 20 mA test signal

A 4 to 20 mA test signal may be measured via the test terminals without interrupting the measurement.

4 to 20 mA HART

Explosion protection	Supply voltage
Intrinsically safe	11.5 to 30 V DC
▪ Other types of protection ▪ Devices without a certificate	11.5 to 45 V DC (versions with 35 V DC plug-in connection)

Measuring a 4 to 20 mA test signal

A 4 to 20 mA test signal may be measured via the test terminals without interrupting the measurement.

IO-Link

- 11.5 to 30 V DC if only the analog output is used
- 18 to 30 V DC if IO-Link is used

PROFIBUS PA

Version for non-hazardous areas: 9 to 32 V DC

FOUNDATION Fieldbus

Version for non-hazardous areas: 9 to 32 V DC

Current consumption

- IO-Link < 60 mA
- PROFIBUS PA: 11 mA ±1 mA, switch-on current corresponds to IEC 61158-2, Clause 21
- FOUNDATION Fieldbus: 16 mA ±1 mA, switch-on current corresponds to IEC 61158-2, Clause 21

Electrical connection

Cable entry	Degree of protection	Option [1]
M20 gland	IP66/68 NEMA 4X/6P	A
G ½" thread	IP66/68 NEMA 4X/6P	C
NPT ½" thread	IP66/68 NEMA 4X/6P	D
M12 plug	IP66/67 NEMA 4X/6P	I
7/8" plug	IP66/68 NEMA 4X/6P	M
HAN7D plug 90 deg.	IP65	P
PE cable 5m	IP66/68 NEMA4X/6P + pressure compensation via cable	S
M16 valve connector	IP64	V

1) Product Configurator, "Electrical connection" ordering feature

PROFIBUS PA

The digital communication signal is transmitted to the bus via a twin-core connecting cable. The bus line also provides the power supply. For further information on the network structure and grounding, and for further bus system components such as bus cables, see the relevant

documentation, e.g., Operating Instructions BA00034S "PROFIBUS DP/PA: Guidelines for planning and commissioning" and the PNO Guideline.

FOUNDATION Fieldbus

The digital communication signal is transmitted to the bus via a twin-core connecting cable. The bus line also provides the power supply. For further information on the network structure and grounding and for further bus system components such as bus cables, see the relevant documentation, e.g., Operating Instructions BA00013S "FOUNDATION Fieldbus Overview" and the FOUNDATION Fieldbus Guideline.

Terminals

- Supply voltage and internal ground terminal: 0.5 to 2.5 mm² (20 to 14 AWG)
- External ground terminal: 0.5 to 4 mm² (20 to 12 AWG)

Cable entry

Approval	Type	Clamping area
Standard, CSA GP ATEX II1/2G or II2G Ex ia, IEC Ex ia Ga/Gb or Ex ia Gb, FM/ CSA IS	Plastic M20x1.5	5 to 10 mm (0.2 to 0.39 in)
ATEX II1/2D Ex t, II1/2GD Ex ia, II3G Ex nA, IEC Ex t Da/Db	Metal M20x1.5 (Ex e)	7 to 10.5 mm (0.28 to 0.41 in)

For other technical data, see the housing section → 47

Connector

Devices with valve connector (HART)

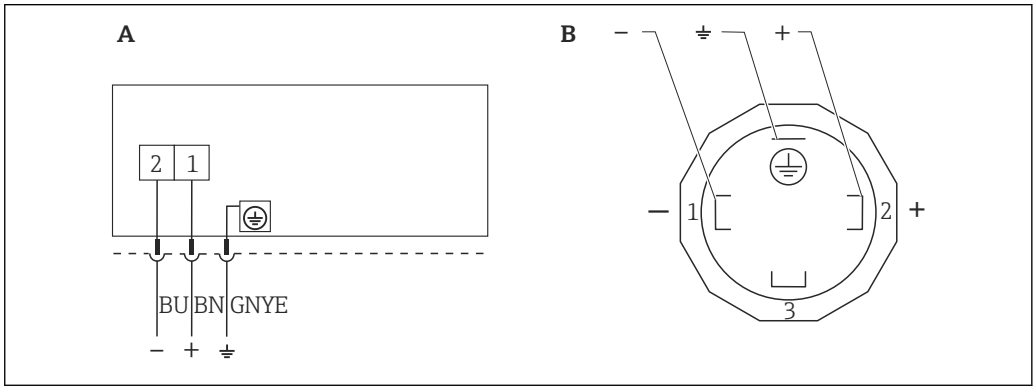

1 *BN = brown, BU = blue, GNYE = green*

A Electrical connection for devices with valve connector
B View of the plug connector at the device

Material: PA 6.6

Connecting devices with Harting plug Han7D (HART)

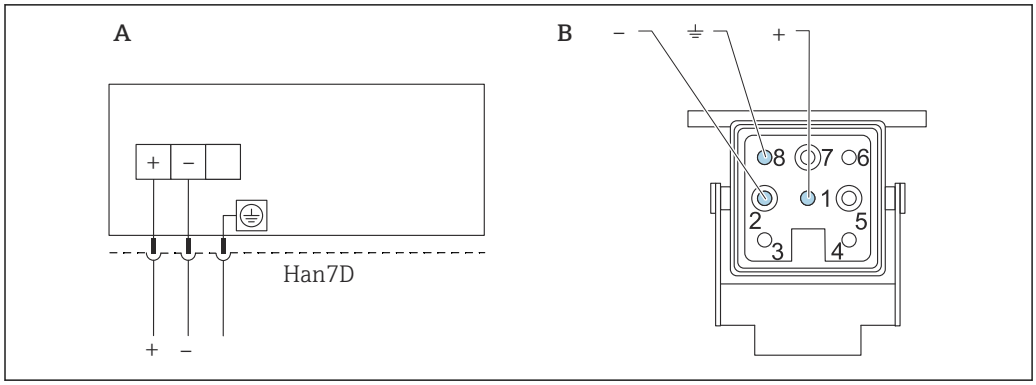

A Electrical connection for devices with Harting plug Han7D
B View of the connection on the device
- Brown
⏚ Green/yellow
+ Blue

Material: CuZn, gold-plated contacts of plug-in jack and plug

Connecting the cable version (all device versions)

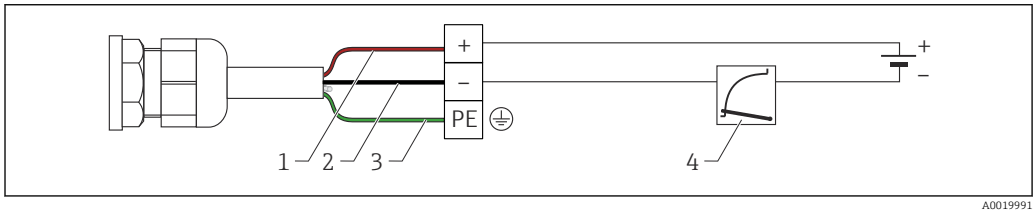

1 RD = red
2 BK = black
3 GNYE = green
4 4 to 20 mA

Connecting devices with M12 plug (analog, HART, PROFIBUS PA)

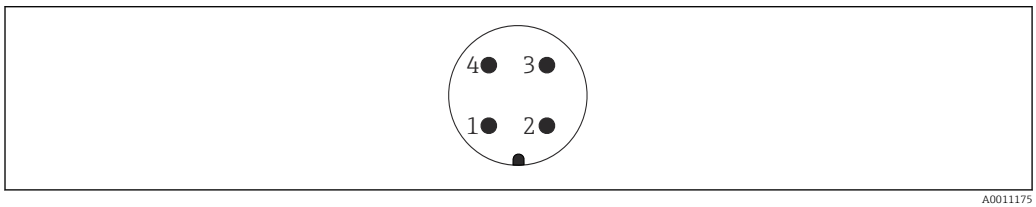

1 Signal +
2 Not assigned
3 Signal –
4 Earth

Endress+Hauser offers the following accessories for devices with an M12 plug:

Plug-in jack M 12x1, straight
- Material: body PA; coupling nut CuZn, nickel-plated
- Degree of protection (fully locked): IP66/67
- Order number: 52006263

Plug-in jack M 12x1, elbowed
- Material: body PBT/PA; coupling nut GD-Zn, nickel-plated
- Degree of protection (fully locked): IP66/67
- Order number: 71114212

Cable 4 x 0.34 mm² (20 AWG) with M12 socket, elbowed, screw plug, length 5 m (16 ft)
- Material: body PUR; coupling nut CuSn/Ni; cable PVC
- Degree of protection (fully locked): IP66/67
- Order number: 52010285

Connecting devices with M12 plug (IO-Link)

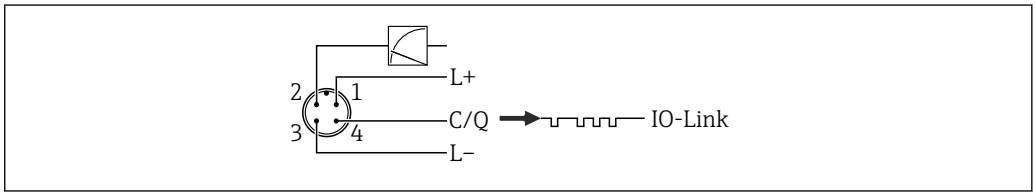

A0045628

1 Supply voltage +
2 4-20 mA
3 Supply voltage -
4 C/Q (IO-Link communication)

Connecting devices with 7/8" plug (analog, HART, FOUNDATION Fieldbus)

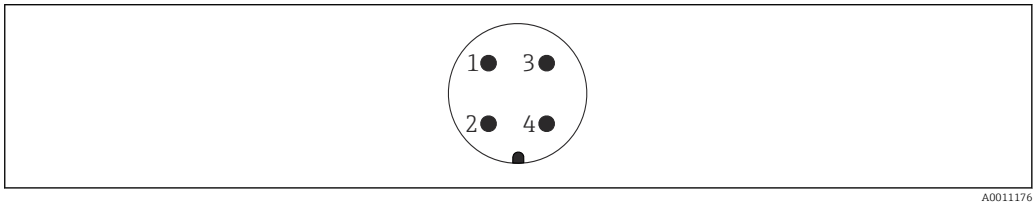

A0011176

1 Signal -
2 Signal +
3 Shield
4 Not assigned

External thread: 7/8 - 16 UNC
- Material: 316L (1.4401)
- Degree of protection: IP66/68

Cable specification

Analog

- Endress+Hauser recommends using twisted, shielded twin-core cables.
- The cable outer diameter depends on the cable entry used.

HART

- Endress+Hauser recommends using twisted, shielded twin-core cables.
- The cable outer diameter depends on the cable entry used.

IO-Link

Endress+Hauser recommends using twisted, four-core cable.

PROFIBUS PA

Endress+Hauser recommends using twisted, shielded twin-core cable, preferably cable type A.

For further information regarding cable specifications, see Operating Instructions BA00034S "PROFIBUS DP/PA: Guidelines for planning and commissioning", the PNO guideline 2.092 "PROFIBUS PA User and Installation Guideline" and IEC 61158-2 (MBP).

FOUNDATION Fieldbus

Use a twisted, shielded twin-core cable, preferably cable type A.

For further information on the cable specifications, see Operating Instructions BA00013S "FOUNDATION Fieldbus Overview", FOUNDATION Fieldbus Guideline and IEC 61158-2 (MBP).

Start-up current

- Analog electronics: 12 mA
- HART: 12 mA or 22 mA (selectable)
- IO-Link: 12 mA

Residual ripple

No influence on 4 to 20 mA signal up to ±5 % residual ripple within the permitted voltage range [according to HART hardware specification HCF_SPEC-54 (DIN IEC 60381-1)].

Influence of power supply

≤0.001 % of URL/V

Overvoltage protection (optional)

The device can be fitted with overvoltage protection. The overvoltage protection is mounted at the factory on the housing thread (M20x1.5) for the cable gland and is approx. 70 mm (2.76 in) in length (take additional length into account when installing). The device is connected as illustrated in the following graphic.

For details refer to TI01013KDE, XA01003KA3 and BA00304KA2.

Ordering information:

Product Configurator, order code for "Mounted accessories", option NA

Wiring

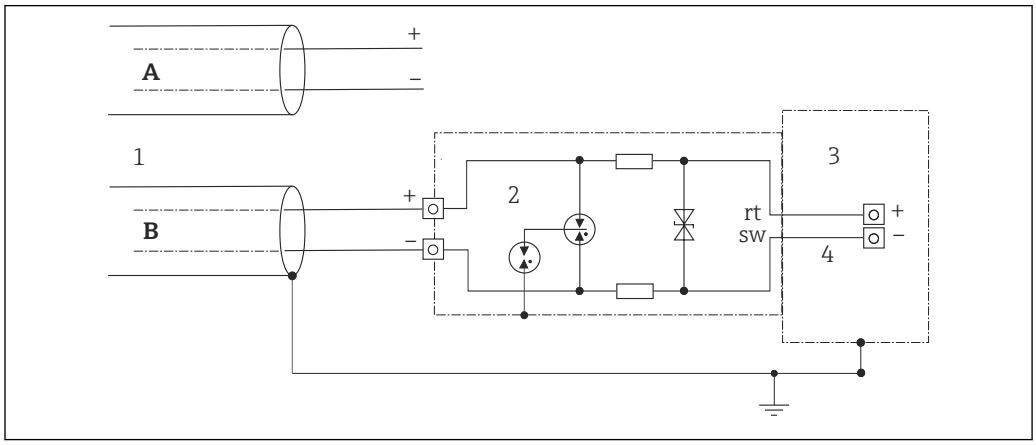

A Without direct shield grounding
B With direct shield grounding
1 Incoming connection cable
2 HAW569-DA2B
3 Unit to be protected
4 Connection cable

Performance characteristics for measuring instruments with ceramic process membrane

Response time

When recording step responses, it is important to bear in mind that the response times of the measuring cell might be added to the specified times.

HART

- Acyclic: min. 330 ms, typically 590 ms (depending on command # and number of preambles)
- Cyclic (burst): min. 160 ms, typically 350 ms (depending on command # and number of preambles)

IO-Link

Cyclic: <10 ms at 38.4 kbps

PROFIBUS PA

- Acyclic: approx. 23 ms to 35 ms (depending on Min. Slave Interval)
- Cyclic: approx. 8 ms to 13 ms (depending on Min. Slave Interval)

FOUNDATION Fieldbus

- Acyclic: typically 70 ms (for standard bus parameter settings)
- Cyclic: max. 20 ms (for standard bus parameter settings)

Reference operating conditions

- As per IEC 62828-2
- Ambient temperature T_A = constant, in the range: +21 to +33 °C (+70 to +91 °F)
- Humidity φ = constant, in the range: 5 to 80 % RH ± 5 %
- Atmospheric pressure p_A = constant, in the range: 860 to 1 060 mbar (12.47 to 15.37 psi)
- Position of the measuring cell: horizontal ±1°
- Input of LOW SENSOR TRIM and HIGH SENSOR TRIM for lower range value and upper range value
- Zero-point based span
- Process membrane material: Al_2O_3 (aluminum oxide ceramic FDA, ultrapure 99.9 %)
- Supply voltage: 24 V DC ±3 V DC
- Load with HART: 250 Ω
- Load in the case of IO-Link: 610 R_L
- Turn down (TD) = URL/ | URV - LRV |

Total performance

The performance characteristics refer to the accuracy of the device. The factors that influence the accuracy can be divided into two groups

- Total performance of device
- Installation factors

All of the performance characteristics meet the requirement of ≥ ± 3 sigma.

The total performance of the device comprises the reference accuracy and the ambient temperature effect and is calculated using the following formula:

Total performance = $\pm \sqrt{((E1)^2 + (E2)^2)}$

E1 = Reference accuracy

E2 = Temperature effect

Calculation of E2:

Temperature effect per ±28 °C (50 °F)

(Corresponds to a range of −3 to +53 °C (+27 to +127 °F))

$E2 = E2_M + E2_E$

$E2_M$ = Main temperature error

$E2_E$ = Electronics error

The values refer to the calibrated span.

Calculation of the total performance with the Endress+Hauser Applicator

Detailed inaccuracies, e.g. for other temperature ranges, can be calculated with the Applicator "Sizing Pressure Performance".

A0038927

Reference accuracy [E1]

The reference accuracy comprises the non-linearity according to the limit point method, pressure hysteresis and non-repeatability in accordance with [IEC62828-1/IEC 61298-2].

Gauge pressure measuring cells

100 mbar (1.5 psi) measuring cell
- Standard: TD 1:1 to 10:1 = ±0.15 %; TD > 10:1 to 20:1 = ±0.2 %
- Platinum: TD 1:1 to 10:1 = ±0.075 %; TD > 10:1 to 20:1 = ±0.0075 % · TD

250 mbar (3.75 psi), 400 mbar (6 psi), 1 bar (15 psi), 2 bar (30 psi), 4 bar (60 psi) and 10 bar (150 psi) measuring cell
- Standard: TD 1:1 to 10:1 = ±0.1 %; TD > 10:1 to 20:1 = ±0.2 %
- Platinum: TD 1:1 to 10:1 = ±0.075 %; TD > 10:1 to 20:1 = ±0.1 %

40 bar (600 psi) measuring cell
- Standard: TD 1:1 to 10:1 = ±0.1 %; TD > 10:1 to 20:1 = ±0.2 %
- Platinum: TD 1:1 to 10:1 = ±0.075 %; TD > 10:1 to 20:1 = ±0.0075 % · TD

Gauge pressure measuring cells with hygienic process connections

100 mbar (1.5 psi) measuring cell
- Standard: TD 1:1 to 10:1 = ±0.10 %; TD > 10:1 to 20:1 = ±0.2 %
- Platinum: TD 1:1 to 10:1 = ±0.075 %; TD > 10:1 to 20:1 = ±0.0075 % · TD

250 mbar (3.75 psi), 400 mbar (6 psi), 1 bar (15 psi), 2 bar (30 psi), 4 bar (60 psi) and 10 bar (150 psi) measuring cell
- Standard: TD 1:1 to 10:1 = ±0.1 %; TD > 10:1 to 20:1 = ±0.2 %
- Platinum: TD 1:1 to 10:1 = ±0.075 %; TD > 10:1 to 20:1 = ±0.1 %

40 bar (600 psi) measuring cell
- Standard: TD 1:1 to 10:1 = ±0.1 %; TD > 10:1 to 20:1 = ±0.2 %
- Platinum: TD 1:1 to 10:1 = ±0.075 %; TD > 10:1 to 20:1 = ±0.0075 % · TD

Absolute pressure measuring cells

100 mbar (1.5 psi) measuring cell
- Standard: TD 1:1 to 10:1 = ±0.15 %; TD > 10:1 to 20:1 = ±0.015 % · TD
- Platinum: TD 1:1 to 10:1 = ±0.075 %; TD > 10:1 to 20:1 = ±0.015 % · TD

250 mbar (3.75 psi), 400 mbar (6 psi), 1 bar (15 psi), 2 bar (30 psi), 4 bar (60 psi) and 10 bar (150 psi) measuring cell
- Standard: TD 1:1 to 10:1 = ±0.1 %; TD > 10:1 to 20:1 = ±0.2 %
- Platinum: TD 1:1 to 10:1 = ±0.075 %; TD > 10:1 to 20:1 = ±0.1 %

40 bar (600 psi) measuring cell
- Standard: TD 1:1 to 10:1 = ±0.1 %; TD > 10:1 to 20:1 = ±0.2 %
- Platinum: TD 1:1 to 10:1 = ±0.075 %; TD > 10:1 to 20:1 = ±0.0075 % · TD

Absolute pressure measuring cells with hygienic process connections

100 mbar (1.5 psi) measuring cell
- Standard: TD 1:1 to 10:1 = ±0.1 %; TD > 10:1 to 20:1 = ±0.15 % · TD
- Platinum: TD 1:1 to 10:1 = ±0.075 %; TD > 10:1 to 20:1 = ±0.015 % · TD

250 mbar (3.75 psi), 400 mbar (6 psi), 1 bar (15 psi), 2 bar (30 psi), 4 bar (60 psi) and 10 bar (150 psi) measuring cell
- Standard: TD 1:1 to 10:1 = ±0.1 %; TD > 10:1 to 20:1 = ±0.2 %
- Platinum: TD 1:1 to 10:1 = ±0.075 %; TD > 10:1 to 20:1 = ±0.1 %

40 bar (600 psi) measuring cell
- Standard: TD 1:1 to 10:1 = ±0.1 %; TD > 10:1 to 20:1 = ±0.2 %
- Platinum: TD 1:1 to 10:1 = ±0.075 %; TD > 10:1 to 20:1 = ±0.0075 % · TD

Temperature effect [E2]

$E2_M$ - Main temperature error

The output changes due to the effect of the ambient temperature [IEC 62828-1/IEC 61298-3] with respect to the reference temperature [IEC 62828-1/DIN 16086]. The values specify the maximum error due to min./max. ambient or process temperature conditions.

100 mbar (1.5 psi), 250 mbar (3.75 psi) and 400 mbar (6 psi) measuring cell
- Standard: ±(0.277 % · TD + 0.275 %)
- Platinum: ±(0.277 % · TD + 0.275 %)

1 bar (15 psi), 2 bar (30 psi), 4 bar (60 psi), 10 bar (150 psi) and 40 bar (600 psi) measuring cell
- Standard: ±(0.157 % · TD + 0.235 %)
- Platinum: ±(0.157 % · TD + 0.235 %)

With hygienic process connections

100 mbar (1.5 psi), 250 mbar (3.75 psi) and 400 mbar (6 psi) measuring cell
- Standard: ±(0.277 % · TD + 0.275 %)
- Platinum: ±(0.277 % · TD + 0.275 %)

1 bar (15 psi), 2 bar (30 psi), 4 bar (60 psi), 10 bar (150 psi) and 40 bar (600 psi) measuring cell
- Standard: ±(0.157 % · TD + 0.235 %)
- Platinum: ±(0.157 % · TD + 0.235 %)

$E2_E$ - Electronics error

- Analog output (4 to 20 mA): 0.2 %
- Digital output (HART/IO-Link/PA/FF): 0 %

Resolution

- Current output: 1 µA
- Display: can be set (factory setting: presentation of the maximum accuracy of the transmitter)

Total error

The total error of the device comprises the total performance and the long-term stability effect and is calculated using the following formula:

Total error = total performance + long-term stability

Calculation of the total error with the Endress+Hauser Applicator

Detailed inaccuracies, e.g. for other temperature ranges, can be calculated with the Applicator "Sizing Pressure Performance".

A0038927

Calculation of the diaphragm seal error with the Endress+Hauser Applicator

Diaphragm seal errors are not taken into consideration. They are calculated separately in the Applicator "Sizing Diaphragm Seal".

A0038925

Long-term stability

The specifications refer to the upper range limit (URL).

400 mbar (6 psi) and 1 bar (15 psi) measuring cell
- 1 year: ±0.20 %
- 5 years: ±0.40 %
- 10 years: ±0.50 %

2 bar (30 psi), 4 bar (60 psi), 10 bar (150 psi) and 40 bar (600 psi) measuring cell
- 1 year: ±0.10 %
- 5 years: ±0.25 %
- 10 years: ±0.40 %

With hygienic process connections

400 mbar (6 psi) and 1 bar (15 psi) measuring cell
- 1 year: ±0.35 %
- 5 years: ±0.50 %
- 10 years: ±0.60 %

2 bar (30 psi), 4 bar (60 psi), 10 bar (150 psi) and 40 bar (600 psi) measuring cell
- 1 year: ±0.20 %
- 5 years: ±0.35 %
- 10 years: ±0.50 %

Response time T63 and T90

Dead time, time constant

Representation of dead time and time constant as per IEC62828-1:

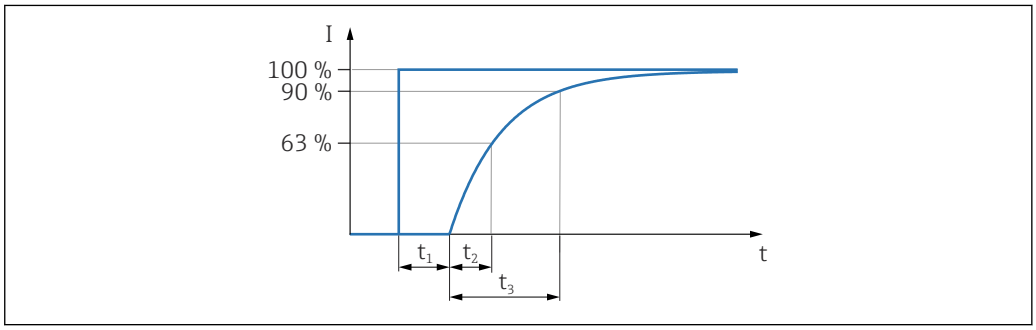

A0019786

Step response time = dead time (t_1) + time constant T90 (t_3) according to IEC62828-1

Dynamic behavior, current output (analog electronics)

	Dead time (t_1)	Time constant T63 (= t_2)	Time constant T90 (= t_3)
Max.	60 ms	40 ms	50 ms

Dynamic behavior, current output (HART electronics)

	Dead time (t_1)	Time constant T63 (= t_2)	Time constant T90 (= t_3)
Max.	50 ms	85 ms	200 ms

Dynamic behavior, digital output (HART electronics)

	Dead time (t_1)	Dead time (t_1) + Time constant T63 (= t_2)	Dead time (t_1) + Time constant T90 (= t_3)
Min.	210 ms	295 ms	360 ms
Max.	1010 ms	1095 ms	1160 ms

Read cycle

- Acyclic: max. 3/s, typically 1/s (depends on command # and number of preambles)
- Cyclic (burst): max. 3/s, typically 2/s

The device commands the BURST MODE function for cyclic value transmission via the HART communication protocol.

Cycle time (update time)

Cyclic (burst): min. 300 ms

IO-Link

	Dead time (t_1)	Time constant (T63) t_2	Time constant (T90) t_3
Min.	50 ms + cycle time	85 ms + cycle time	200 ms + cycle time

Read cycle

- Acyclic: cyclic/n where n is dependent on the size of the acyclical data
- Cyclic: min. 100/s

Cycle time (update time)

Cyclic (burst): min. 10 ms

Dynamic behavior, PROFIBUS PA

	Dead time (t_1)	Dead time (t_1) + Time constant T63 (= t_2)	Dead time (t_1) + Time constant T90 (= t_3)
Min.	85 ms	170 ms	235 ms
Max.	1185 ms	1270 ms	1335 ms

Read cycle (PLC)

- Acyclic: typically 25/s
- Cyclic: typically 30/s (depending on the number and type of function blocks used in the closed-control loop)

Cycle time (update time)

Min. 100 ms

The cycle time in a bus segment in cyclic data communication depends on the number of devices, on the segment coupler used and on the internal PLC cycle time.

Dynamic behavior, FOUNDATION Fieldbus

	Dead time (t_1)	Dead time (t_1) + Time constant T63 (= t_2)	Dead time (t_1) + Time constant T90 (= t_3)
Min.	95 ms	180 ms	245 ms
Max.	1095 ms	1180 ms	1245 ms

Read cycle

- Acyclic: typically 5/s
- Cyclic: max. 10/s (depending on the number and type of function blocks used in a closed-control loop)

Cycle time (update time)

Cyclic: min. 100 ms

Installation factors

Influence of installation position

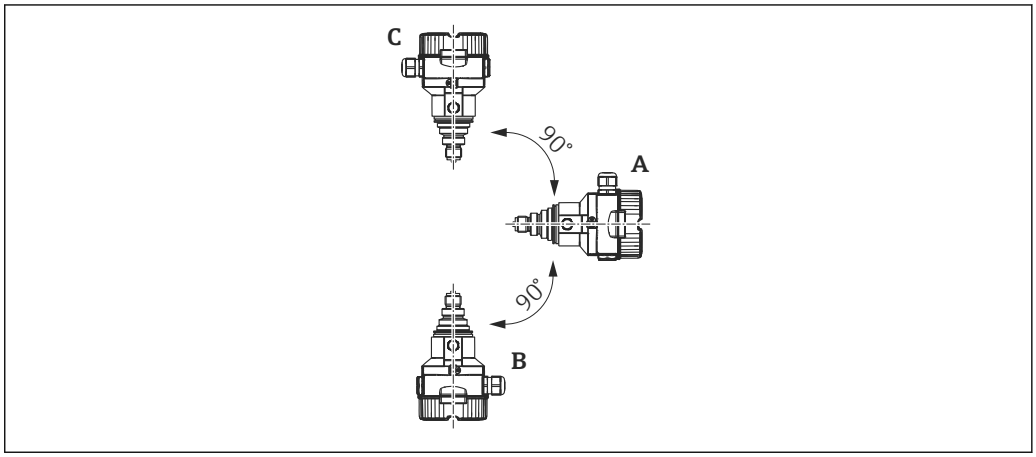

A0023697

Measuring error in mbar (psi)

Process membrane axis is horizontal (A)	Process membrane pointing upwards (B)	Process membrane pointing downwards (C)
Calibration position, no measurement error	<+0.2 mbar (+0.003 psi)	<−0.2 mbar (−0.003 psi)

A position-dependent zero point shift can be corrected on the device.

Warm-up time

- 4 to 20 mA analog: ≤ 1.5 s
- 4 to 20 mA HART: ≤ 5 s
- IO-Link: <1 s
- PROFIBUS PA: ≤ 8 s
- FOUNDATION Fieldbus: ≤ 20 s (≤ 45 s after a TOTAL reset)

Performance characteristics for measuring instruments with metallic process membrane

Response time

When recording step responses, it is important to bear in mind that the response times of the measuring cell might be added to the specified times.

HART

- Acyclic: min. 330 ms, typically 590 ms (depending on command # and number of preambles)
- Cyclic (burst): min. 160 ms, typically 350 ms (depending on command # and number of preambles)

IO-Link

Cyclic: <10 ms at 38.4 kbps

PROFIBUS PA

- Acyclic: approx. 23 ms to 35 ms (depending on Min. Slave Interval)
- Cyclic: approx. 8 ms to 13 ms (depending on Min. Slave Interval)

FOUNDATION Fieldbus

- Acyclic: typically 70 ms (for standard bus parameter settings)
- Cyclic: max. 20 ms (for standard bus parameter settings)

Reference operating conditions

- As per IEC 62828-2
- Ambient temperature T_A = constant, in the range: +21 to +33 °C (+70 to +91 °F)
- Humidity φ = constant, in the range: 5 to 80 % RH %
- Atmospheric pressure p_A = constant, in the range: 860 to 1060 mbar (12.47 to 15.37 psi)
- Position of the measuring cell: constant, in the range: ±1° horizontally
- Input of LOW SENSOR TRIM and HIGH SENSOR TRIM for lower range value and upper range value
- Zero-point based span
- Material of the process membrane: AISI 316L
- Fill fluid PMP51: synthetic oil as per FDA 21 CFR 178.3620 (b)(1) and NSF H-1
- Supply voltage: 24 V DC ±3 V DC
- Load for HART: 250 Ω
- Load in the case of IO-Link: 610 R_L

Total performance

The performance characteristics refer to the accuracy of the device. The factors that influence the accuracy can be divided into two groups

- Total performance of device
- Installation factors

All of the performance characteristics meet the requirement of ≥ ± 3 sigma.

The total performance of the device comprises the reference accuracy and the ambient temperature effect and is calculated using the following formula:

Total performance = $\pm \sqrt{((E1)^2 + (E2)^2)}$

E1 = Reference accuracy

E2 = Ambient temperature effect

Calculation of E2:

Ambient temperature effect per ±28 °C (50 °F)

(Corresponds to a range of −3 to +53 °C (+27 to +127 °F))

$E2 = E2_M + E2_E$

$E2_M$ = Main temperature error

$E2_E$ = Electronics error

- The values apply to process membranes made of 316L (1.4435)
- The values refer to the calibrated span.

Reference accuracy [E1]

The reference accuracy comprises the non-linearity according to the limit point method, pressure hysteresis and non-repeatability in accordance with [IEC62828-1/IEC 61298-2].

PMP51

400 mbar (6 psi) measuring cell
- Standard: TD 1:1 = ±0.1 %; TD > 1:1 to 20:1 = ±0.15 % · TD
- Platinum: -

1 bar (15 psi) measuring cell
- Standard: TD 1:1 to 5:1 = ±0.1 %; TD > 5:1 to 20:1 = ±0.03 % · TD
- Platinum: TD 1:1 to 2.5:1 = ±0.075 %; TD > 2.5:1 to 20:1= ±0.03 · TD

2 bar (30 psi) measuring cell
- Standard: TD 1:1 to 10:1 = ±0.1 %; TD > 10:1 to 20:1 = ±0.015 % · TD
- Platinum: TD 1:1 to 5:1 = ±0.075 %; TD > 5:1 to 20:1 = ±0.015 % · TD

4 bar (60 psi) measuring cell
- Standard: TD 1:1 to 10:1 = ±0.1 %; TD > 10:1 to 20:1 = ±0.2 %
- Platinum: TD 1:1 to 10:1 = ±0.075 %; TD > 10:1 to 20:1 = ±0.0075 % · TD

10 bar (150 psi) and 40 bar (600 psi) measuring cell
- Standard: TD 1:1 to 10:1 = ±0.1 %; TD > 10:1 to 20:1 = ±0.2 %
- Platinum: TD 1:1 to 10:1 = ±0.075 %; TD > 10:1 to 20:1 = ±0.1 %

100 bar (1 500 psi) measuring cell
- Standard: TD 1:1 to 10:1 = ±0.1 %; TD > 10:1 to 20:1 = ±0.2 %
- Platinum: TD 1:1 to 10:1 = ±0.075 %; TD > 10:1 to 20:1 = ±0.15 %

400 bar (6 000 psi) measuring cell
- Standard: TD 1:1 to 5:1 = ±0.1 %; TD > 5:1 to 20:1 = ±0.03 % · TD
- Platinum: TD 1:1 to 5:1 = ±0.1 %; TD > 5:1 to 20:1 = ±0.03 % · TD

PMP51 with hygienic process connections

400 mbar (6 psi) measuring cell
- Standard: TD 1:1 = ±0.1 %; TD > 1:1 to 10:1 = ±0.3 % · TD
- Platinum: -

1 bar (15 psi) measuring cell
- Standard: TD 1:1 = ±0.1 %; TD > 1:1 to 10:1 = ±0.3 % · TD
- Platinum: TD 1:1 = ±0.1 %; TD > 1:1 to 10:1 = ±0.2 % · TD

2 bar (30 psi) measuring cell
- Standard: TD 1:1 to 5:1 = ±0.1 %; TD > 5:1 to 10:1 = ±0.2 %
- Platinum: TD 1:1 to 5:1 = ±0.075 %; TD > 5:1 to 10:1 = ±0.1 %

4 bar (60 psi), 10 bar (150 psi) and 40 bar (600 psi) measuring cell
- Standard: TD 1:1 to 10:1 = ±0.1 %; TD > 10:1 to 20:1 = ±0.2 %
- Platinum: TD 1:1 to 10:1 = ±0.075 %; TD > 10:1 to 20:1 = ±0.1 %

PMP55

400 mbar (6 psi) measuring cell
- Standard: TD 1:1 = ±0.15 %; TD > 1:1 to 20:1 = ±0.15 % · TD
- Platinum: not available

1 bar (15 psi) measuring cell
- Standard: TD 1:1 to 5:1 = ±0.15 %; TD > 5:1 to 20:1 = ±0.03 % · TD
- Platinum: TD 1:1 to 2.5:1 = ±0.075 %; TD > 2.5:1 to 20:1 = ±0.03 % · TD

2 bar (30 psi) measuring cell
- Standard: TD 1:1 to 10:1 = ±0.15 %; TD > 10:1 to 20:1 = ±0.015 % · TD
- Platinum: TD 1:1 to 5:1 = ±0.075 %; TD > 5:1 to 20:1 = ±0.015 % · TD

4 bar (60 psi) measuring cell
- Standard: TD 1:1 to 10:1 = ±0.15 %; TD > 10:1 to 20:1 = ±0.2 %
- Platinum: TD 1:1 to 10:1 = ±0.075 %; TD > 10:1 to 20:1 = ±0.0075 % · TD

10 bar (150 psi) and 40 bar (600 psi) measuring cell
- Standard: TD 1:1 to 10:1 = ±0.15 %; TD > 10:1 to 20:1 = ±0.2 %
- Platinum: TD 1:1 to 10:1 = ±0.075 %; TD > 10:1 to 20:1 = ±0.1 %

100 bar (1 500 psi) measuring cell
- Standard: TD 1:1 to 10:1 = ±0.15 %; TD > 10:1 to 20:1 = ±0.2 %
- Platinum: TD 1:1 to 10:1 = ±0.075 %; TD > 10:1 to 20:1 = ±0.15 %

400 bar (6 000 psi) measuring cell
- Standard: TD 1:1 to 5:1 = ±0.15 %; TD > 5:1 to 20:1 = ±0.03 % · TD
- Platinum: TD 1:1 to 5:1 = ±0.15 %; TD > 5:1 to 20:1 = ±0.03 % · TD

Platinum only for direct diaphragm seal mounting.

Temperature effect [E2]

$E2_M$ - Main temperature error

The output changes due to the effect of the ambient temperature [IEC 62828-1/IEC 61298-3] with respect to the reference temperature [IEC 62828-1/DIN 16086]. The values specify the maximum error due to min./max. ambient or process temperature conditions.

400 mbar (6 psi) measuring cell
±(0.08 % · TD + 0.16 %)

1 bar (15 psi) measuring cell
±(0.08 % · TD + 0.16 %)

2 bar (30 psi) measuring cell
±(0.08 % · TD + 0.16 %)

4 bar (60 psi) measuring cell
±(0.08 % · TD + 0.16 %)

10 bar (150 psi) and 40 bar (600 psi) measuring cell
±(0.06 % · TD + 0.06 %)

100 bar (1 500 psi) measuring cell
±(0.03 % · TD + 0.12 %)

400 bar (6 000 psi) measuring cell
±(0.03 % · TD + 0.12 %)

PMP51 with hygienic process connections

400 mbar (6 psi) measuring cell with clamp ½"
- Standard: ±(0.4 % · TD + 0.1 %)
- Platinum: -

400 mbar (6 psi) and 1 bar (15 psi) measuring cell
- Standard: ±(0.25 % · TD + 0.1 %)
- Platinum: ±(0.25 % · TD + 0.1 %)

2 bar (30 psi), 4 bar (60 psi), 10 bar (150 psi) and 40 bar (600 psi) measuring cell
- Standard: ±(0.2 % · TD + 0.1 %)
- Platinum: ±(0.2 % · TD + 0.1 %)

$E2_E$ - Electronics error

- Analog output (4 to 20 mA): 0.2 %
- Digital output (HART/IO-Link/PA/FF): 0 %

Calculation of the total performance with the Endress+Hauser Applicator

Detailed inaccuracies, e.g. for other temperature ranges, can be calculated with the Applicator "Sizing Pressure Performance".

A0038927

Calculation of the diaphragm seal error with the Endress+Hauser Applicator

Diaphragm seal errors are not taken into consideration. They are calculated separately in the Applicator "Sizing Diaphragm Seal".

A0038925

Resolution

- Current output: 1 µA
- Display: can be set (factory setting: presentation of the maximum accuracy of the transmitter)

Total error

The total error of the device comprises the total performance and the long-term stability effect and is calculated using the following formula:

Total error = total performance + long-term stability

Calculation of the total error with the Endress+Hauser Applicator

Detailed inaccuracies, e.g. for other temperature ranges, can be calculated with the Applicator "Sizing Pressure Performance".

A0038927

Calculation of the diaphragm seal error with the Endress+Hauser Applicator

Diaphragm seal errors are not taken into consideration. They are calculated separately in the Applicator "Sizing Diaphragm Seal".

A0038925

Long-term stability

The specifications refer to the upper range limit (URL).

- 1 year: ±0.10 %
- 5 years: ±0.20 %
- 10 years: ±0.25 %

PMP51 with hygienic process connections

400 mbar (6 psi) and 1 bar (15 psi) measuring cell
- 1 year: ±0.25 %
- 5 years: ±0.48 %
- 10 years: ±0.58 %

2 bar (30 psi), 4 bar (60 psi), 10 bar (150 psi) and 40 bar (600 psi) measuring cell
- 1 year: ±0.10 %
- 5 years: ±0.33 %
- 10 years: ±0.43 %

Response time T63 and T90

Dead time, time constant

Representation of dead time and time constant as per IEC62828-1:

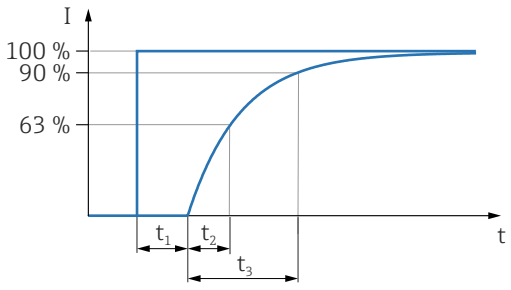

A0019786

Step response time = dead time (t_1) + time constant T90 (t_3) according to IEC62828-1

Dynamic behavior, current output (analog electronics)

	Device	Dead time (t_1)	Time constant T63 (= t_2)	Time constant T90 (= t_3)
Max.	PMP51	40 ms	40 ms	50 ms
Max.	PMP55	PMP51 + influence of the diaphragm seal		

Dynamic behavior, current output (HART electronics)

	Device	Dead time (t_1)	Time constant T63 (= t_2)	Time constant T90 (= t_3)
Max.	PMP51	70 ms	80 ms	185 ms
Max.	PMP55	PMP51 + influence of the diaphragm seal		

Dynamic behavior, digital output (HART electronics)

	Device	Dead time (t_1)	Dead time (t_1) + Time constant T63 (= t_2)	Dead time (t_1) + Time constant T90 (= t_3)
Min.	PMP51	210 ms	285 ms	345 ms
Max.		1010 ms	1085 ms	1145 ms
Max.	PMP55	PMP51 + influence of the diaphragm seal		

Read cycle

- Acyclic: max. 3/s, typically 1/s (depends on command # and number of preambles)
- Cyclic (burst): max. 3/s, typically 2/s

The device commands the BURST MODE function for cyclic value transmission via the HART communication protocol.

Cycle time (update time)

Cyclic (burst): min. 300 ms

IO-Link

	Device	Dead time (t_1)	Time constant (T63) t_2	Time constant (T90) t_3
Min.	PMP51	70 ms + cycle time	80 ms + cycle time	185 ms + cycle time
	PMP55	PMP51 + influence of the diaphragm seal		

Read cycle

- Acyclic: cyclic/n where n is dependent on the size of the acyclical data
- Cyclic: min. 100/s

Cycle time (update time)

Cyclic: min. 10 ms

Dynamic behavior, PROFIBUS PA

	Device	Dead time (t_1)	Dead time (t_1) + Time constant T63 (= t_2)	Dead time (t_1) + Time constant T90 (= t_3)
Min.	PMP51	85 ms	160 ms	220 ms
Max.		1185 ms	1260 ms	1320 ms
Max.	PMP55	PMP51 + influence of the diaphragm seal		

Read cycle (PLC)

- Acyclic: typically 25/s
- Cyclic: typically 30/s (depending on the number and type of function blocks used in the closed-control loop)

Cycle time (update time)

Min. 100 ms

The cycle time in a bus segment in cyclic data communication depends on the number of devices, on the segment coupler used and on the internal PLC cycle time.

Dynamic behavior, FOUNDATION Fieldbus

	Device	Dead time (t_1)	Dead time (t_1) + Time constant T63 (= t_2)	Dead time (t_1) + Time constant T90 (= t_3)
Min.	PMP51	95 ms	170 ms	230 ms
Max.		1095 ms	1170 ms	1230 ms
Max.	PMP55	PMP51 + influence of the diaphragm seal		

Read cycle

- Acyclic: typically 5/s
- Cyclic: max. 10/s (depending on the number and type of function blocks used in a closed-control loop)

Cycle time (update time)

Cyclic: min. 100 ms

Installation factors

Influence of installation position

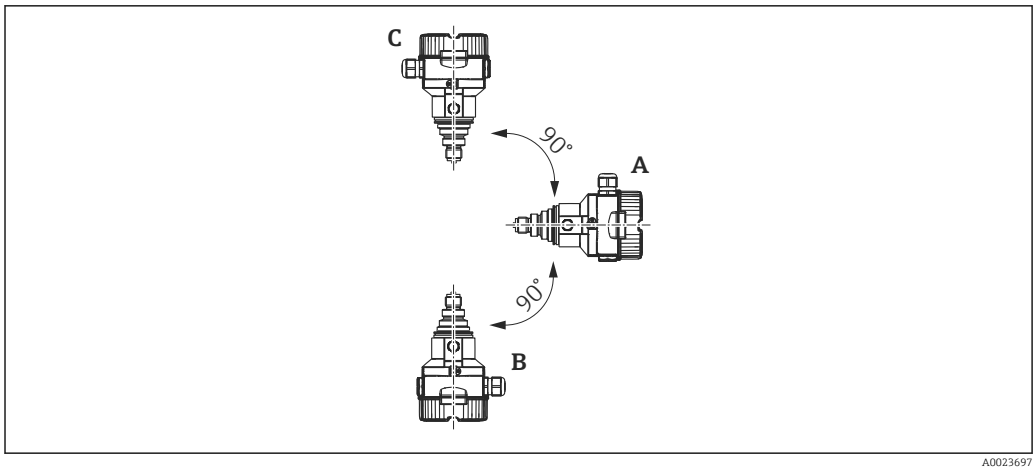

A0023697

Measuring error in mbar (psi)

	Process membrane axis is horizontal (A)	Process membrane pointing upwards (B)	Process membrane pointing downwards (C)
PMP51 with ½" thread and silicone oil	Calibration position, no measurement error	<+4 mbar (+0.06 psi)	<−4 mbar (−0.06 psi)
PMP51 with thread > ½" and flanges		<+10 mbar (+0.145 psi) The value is doubled for inert oil.	<−10 mbar (−0.145 psi) The value is doubled for inert oil.

A position-dependent zero point shift can be corrected on the device.

Warm-up time

- 4 to 20 mA analog: ≤ 1.5 s
- 4 to 20 mA HART: ≤ 5 s
- IO-Link: <1 s
- PROFIBUS PA: ≤ 8 s
- FOUNDATION Fieldbus: ≤ 20 s (≤ 45 s after a TOTAL reset)

Mounting

General installation instructions

The position-dependent zero point shift can be corrected:
- directly at the device via operating keys on the electronic insert
- directly at the device via operating keys on the display (except analog electronics)
- via digital communication if the cover is not open (except analog electronics).

- Endress+Hauser offers a mounting bracket for installing the device on pipes or walls.
- Use flushing rings for flange and cell diaphragm seals if buildup or clogging can be expected at the diaphragm seal connection. The flushing ring can be fitted between the process connection and diaphragm seal. Material buildup in front of the process membrane can be flushed away, and the pressure chamber vented, via the two lateral flushing holes.
- To guarantee leak-tightness of the transmitter, Endress+Hauser recommends you use only the original cable glands (also available as spare part).

Measuring arrangement for devices without diaphragm seal – PMC51, PMP51

Cerabar M transmitters without diaphragm seals are mounted as per the norms for a manometer (DIN EN 837-2). We recommend the use of shutoff devices and siphons. The orientation depends on the measuring application.

Pressure measurement in gases

Mount Cerabar M with shutoff device above the tapping point so that any condensate can flow into the process.

Pressure measurement in steams

Use a siphon if measuring pressure in steams. The siphon reduces the temperature to almost the ambient temperature. Fill the siphon with liquid before commissioning. Preferably mount the Cerabar M with a siphon below the tapping point.

Advantages:
- Defined water column only causes minimal/negligible measured errors
- Only minimal/negligible thermal effects on the device
  The device may also be mounted above the tapping point. Pay attention to the maximum permitted ambient temperature of the transmitter!
- Fill the siphon with liquid before commissioning.

Pressure measurement in liquids

Mount Cerabar M with shutoff device below or at the same level as the tapping point.

Level measurement

- Mount Cerabar M below the lowest measuring point (zero point of the measurement).
- Do not mount the device at the following positions: In the filling curtain, in the tank outlet or at a point in the vessel which could be affected by pressure pulses from an agitator or a pump.
- The calibration and functional test can be carried out more easily if you mount the device downstream of a shutoff device.

Measuring arrangement for devices with diaphragm seal – PMP55

→ 117

Wall and pipe mounting, transmitter (optional)

Endress+Hauser offers the following mounting bracket for installing the device on pipes or walls:

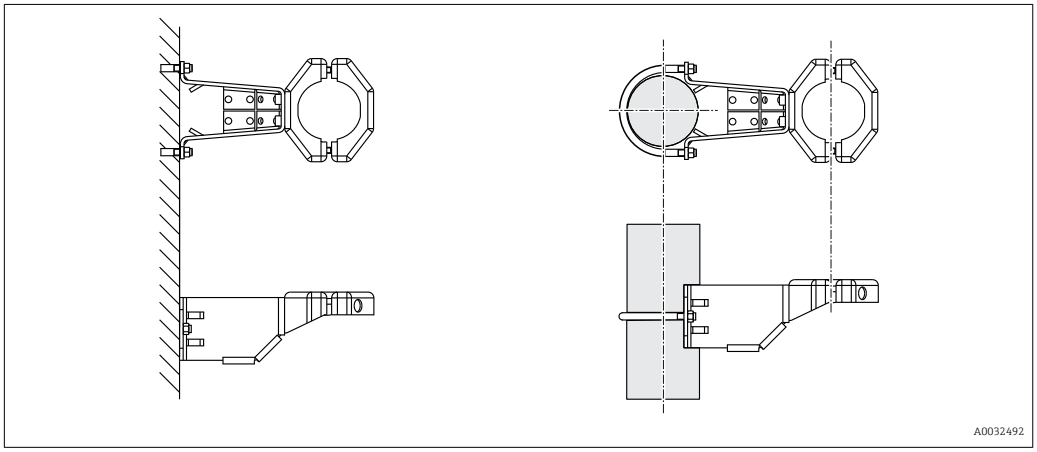

Ordering information:
- Product configurator "Accessory Enclosed" ordering feature, option PA.
- included in the delivery for devices with a separate housing (available for order via feature "Separate housing")
- available for order as a separate accessory (Part No.: 71102216).

Further details→ 🖹 101.

Wall and pipe-mounting manifold (optional)

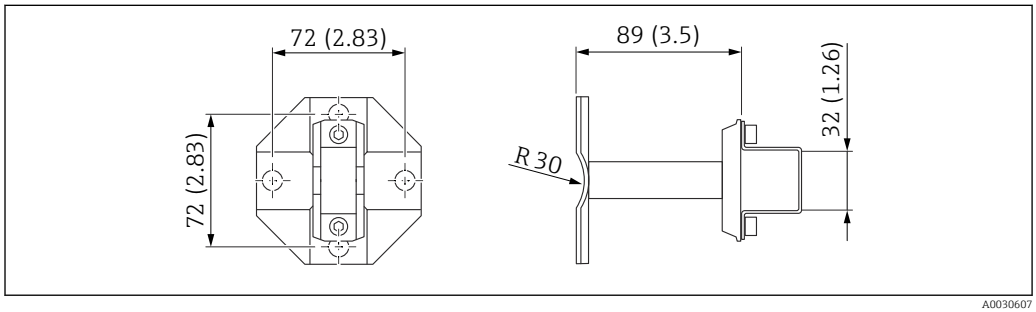

Technical data (e.g. dimensions or order numbers for screws) see accessory document SD01553P/00/EN.

Ordering information:

Product Configurator, order code for "Accessories enclosed", option "PK"

"Separate housing" version

With the "separate housing" version, you are able to mount the housing with the electronics insert at a distance from the measuring point. This allows for trouble-free measurement:
- Under particularly difficult measuring conditions (at installation locations that are cramped or difficult to access)
- If rapid cleaning of the measuring point is required and
- If the measuring point is exposed to vibrations.

You can choose between different cable versions:
- PE: 2 m (6.6 ft), 5 m (16 ft) and 10 m (33 ft)
- FEP: 5 m (16 ft).

Ordering information:
- Product Configurator, order code for "Separate housing" or
- Product Configurator, order code for "Accessory enclosed" ordering feature, option PA

Dimensions → 🖹 101

In the case of the "separate housing" version, the measuring cell is delivered with the process connection and cable ready mounted. The housing and a mounting bracket are enclosed as separate units. The cable is provided with a socket at both ends. These sockets are simply connected to the housing and the measuring cell.

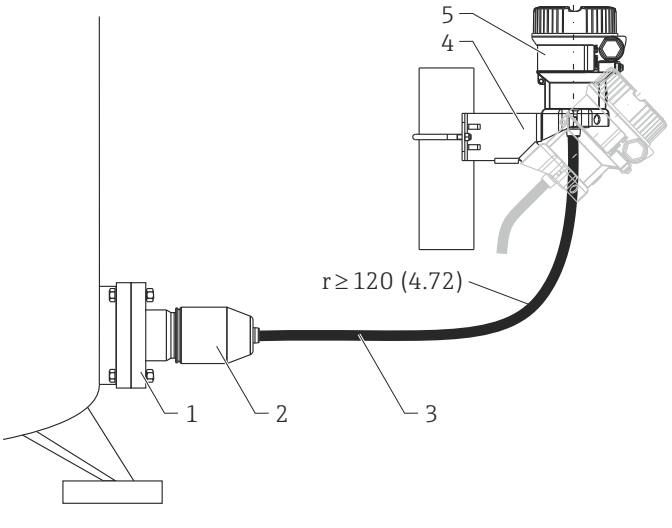

1 Process connection with measuring cell - see the following section for the degrees of protection
2 Process connection adapter (weight: 0.93 kg (2.05 lb))
3 Cable (weight: 0.05 kg/meter (0.11 lb)), both ends are fitted with a socket
4 Mounting bracket provided, suitable for pipe and wall mounting (for pipes from 1 1/4" up to 2" diameter)
5 Housing with electronic insert - degrees of protection → 🖹 41

Engineering unit mm (in)

Degree of protection for the process connection and measuring cell with the use of
- FEP cable:
  - IP 69 [2)]
  - IP 66 NEMA 4/6P
  - IP 68 (1.83 mH_2O for 24 h) NEMA 4/6P
- PE cable:
  - IP 66 NEMA 4/6P
  - IP 68 (1.83 mH_2O for 24 h) NEMA 4/6P

Technical data of the PE and FEP cable:
- Minimum bending radius: 120 mm (4.72 in)
- Cable extraction force: max. 450 N (101.16 lbf)
- Resistance to UV light

2) Designation of the IP protection class according to DIN EN 60529. Previous designation "IP69K" according to DIN 40050 Part 9 is no longer valid (standard withdrawn on November 1, 2012). The tests required by both standards are identical.

Use in hazardous area:
- Intrinsically safe installations (Ex ia/IS)
- FM/CSA IS: for Div.1 installation only

Oxygen applications

Oxygen and other gases can react explosively to oils, grease and plastics, such that, among other things, the following precautions must be taken:
- All components of the system, such as measuring instruments, must be cleaned in accordance with the BAM (DIN 19247) requirements.
- Depending on the materials used, a certain maximum temperature and a maximum pressure must not be exceeded for oxygen applications.

The devices suitable for gaseous oxygen applications are listed in the following table with the p_{max} specification.

Order code for devices [1], cleaned for oxygen applications	p_{max} for oxygen applications	T_{max} for oxygen applications
PMC51 [2] – devices with measuring cells, nominal value <10 bar (150 psi)	Over pressure limit (OPL) of the measuring cell [3] [4]	60 °C (140 °F)
PMC51 [2] – devices with measuring cells, nominal value ≥10 bar (150 psi)	40 bar (600 psi)	60 °C (140 °F)
PMP51 , PMP55 [5]	Depends on the lowest-rated element, with regard to pressure, of the selected components: over pressure limit (OPL) of the measuring cell [3], process connection (1.5 x PN) or fill fluid (80 bar (1 200 psi)	60 °C (140 °F)

1) Devices only, not accessories or enclosed accessories.
2) Product Configurator, order code for "Service", option "HB"
3) Product Configurator, order code for "Sensor range"
4) PMC51 with PVDF thread or PVDF flange p_{max} = 15 bar (225 psi)15 bar (225 psi)
5) Product Configurator, order code for "Service", option "HB"

PWIS cleaning

Special cleaning of the transmitter to remove paint-wetting substances, for use in paint shops, for instance.

Ordering information:

Ordering information: Product Configurator, "Service" ordering feature, option HC

The stability of the materials used must be checked before using them in the medium.

Ultrapure gas applications (PMC51 und PMP51)

Endress+Hauser also provides devices which have been cleaned of oil and grease for special applications, such as for ultrapure gas. No special restrictions regarding the process conditions apply to these devices.

Ordering information:
Product Configurator, "Service" ordering feature, option "HA"

Applications with hydrogen

A **ceramic** process membrane or a **gold-plated** metallic process membrane offers universal protection against hydrogen diffusion, both in gas applications and in applications with aqueous solutions.

Applications with hydrogen in aqueous solutions

A **gold/rhodium-coated** metallic process membrane (AU/Rh) offers effective protection against hydrogen diffusion.

Environment

Ambient temperature range

Device

- Without LCD display: −40 to +85 °C (−40 to +185 °F) (−25 to +85 °C (−13 to +185 °F) under static conditions with IO-Link)
- Without LCD with IO-Link **with** current output: +70 °C (+158 °F)
- Without LCD with IO-Link **without** current output: +80 °C (+176 °F)
- With LCD display: −20 to +70 °C (−4 to +158 °F)
  Extended temperature operation range (−40 to +85 °C (−40 to +185 °F)) with limitations in optical properties, such as display speed and contrast, for example
- With separate housing (not for diaphragm seals): −20 to +60 °C (−4 to +140 °F)
  (Installation without insulation)

For applications with very high temperatures, a diaphragm seal with a temperature isolator can be used. Use a mounting bracket!

If vibrations additionally occur in the application, Endress+Hauser recommends the use of a diaphragm seal with a capillary.

Included, optional accessories

M12 plug-in jack, 90° angle and 5 meter cable: −25 to +70 °C (−13 to +158 °F)

Storage temperature range

Version	PMC51	PMP51	PMP55
Without LCD display	−40 to +90 °C (−40 to +185 °F)		
With LCD display	−40 to +85 °C (−40 to +185 °F)		
With M12 plug, elbowed	−25 to +70 °C (−13 to +158 °F)		
With separate housing	−40 to +60 °C (−40 to +140 °F)		–
Diaphragm seal systems [1]	–	–	→ 117

1) Devices with PVC-armored capillary: −25 to +80 °C (−13 to +176 °F)

Climate class

Class 4K4H (air temperature: −20 to +55 °C (−4 to +131 °F), relative humidity: 4 to 100%) satisfied as per DIN EN 60721-3-4 (condensation possible)

Degree of protection

- Depending on the used electrical connection → 18
  Ordering information:
  Product Configurator, "Electrical connection" ordering feature
- Separate housing → 39

Vibration resistance

Device/accessory	Test standard	Vibration resistance
Devices without mounting bracket	GL VI-7-2 ▪ Part 7: Guidelines for the Performance of Type Approvals ▪ Chapter 2: Test Requirements for Electrical / Electronic Equipment and Systems	Guaranteed for 5 to 25 Hz: ±1.6 mm (0.06 in); 25 to 100 Hz: 4 g in all 3 axes
	IEC 62828-1 / IEC 61298-3 IEC 60068-2-6	Guaranteed for 10 to 60 Hz: ±0.35 mm (0.01 in); 60 to 2000 Hz: 5 g in all 3 axes
Devices with mounting bracket	IEC 62828-1 / IEC 61298-3 IEC 60068-2-6	Guaranteed for 10 to 60 Hz: ±0.15 mm (0.01 in); 60 to 500 Hz: 2 g in all 3 axes

NOTICE

Strong vibrations can destroy the device!

- ▶ For applications with strong vibrations, use PMC51/ PMP51 with a separate housing.
- ▶ For applications with strong vibrations, use PMP55 with a capillary.
- ▶ We recommend the use of a suitable bracket for mounting (→ 🖹 38).

Electromagnetic compatibility

- Electromagnetic compatibility as per all the relevant requirements of the EN 61326 series and NAMUR Recommendation EMC (NE21).
- Max. deviation : < 0.5 % of the span

Further details can be found in the manufacturer declaration.

Operation in very corrosive environment

PMP55: For corrosive environments (e.g. maritime environment / coastal areas), Endress+Hauser recommends the use of a PVC or PTFE armor for the capillaries. The transmitter can also be protected by a special coating (**T**echnical **S**pecial **P**roduct (TSP)).

Process

Process temperature range PMC51

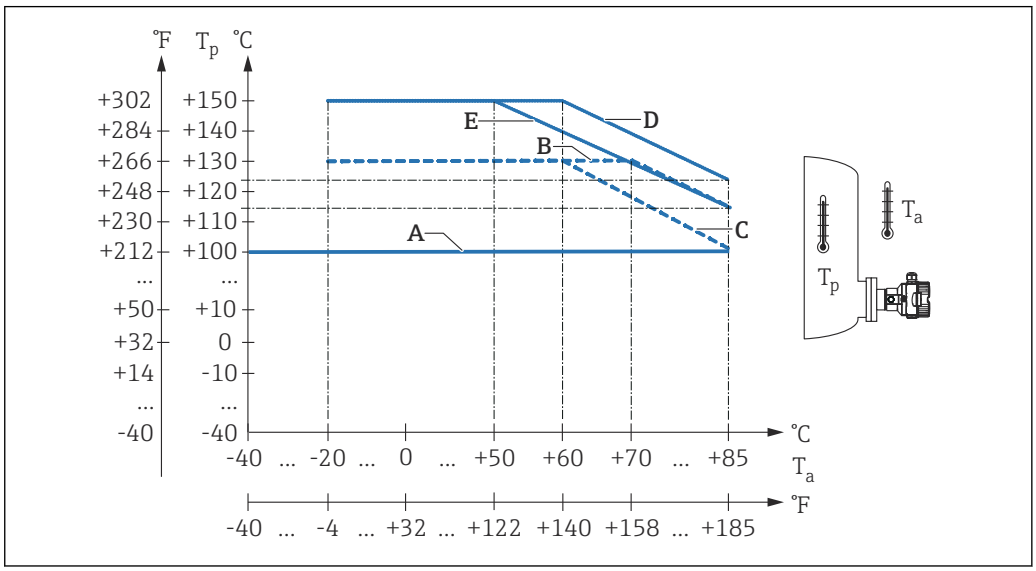

A, B C, D and E, see following section. T_a = Ambient temperature. T_p = Process temperature

Process temperature limits

For oxygen applications → 📄 40

PMC51 (with ceramic process membrane)

- A: −40 to +100 °C (−40 to +212 °F) for process connections with threaded connection or flange
- B: −20 to +130 °C (−4 to +266 °F) for hygienic process connections
- C: Devices with IO-Link: −20 to +130 °C (−4 to +266 °F) for hygienic process connections
- D: For a maximum of 60 minutes: +150 °C (+302 °F) for hygienic process connections
- E: Devices with IO-Link for a maximum of 60 minutes: +150 °C (+302 °F) for hygienic process connections
- For saturated steam applications, use a device with a metallic process membrane, or provide a siphon for temperature isolation when installing.
- Observe the process temperature range of the seal. See the following table.

Seal	Notes	Process temperature range		Option [1]
		Thread/flange	Hygienic process connections	
FKM	-	−20 to +100 °C (−4 to +212 °F)	-	A
FKM	Cleaned for O2 application	−5 to +60 °C (+23 to +140 °F)	-	A [2]
FKM	FDA , 3A Class I, USP Class VI	−5 to +100 °C (+23 to +212 °F)	−5 to +150 °C (+23 to +302 °F)	B
FFKM Perlast G75LT	-	−20 to +100 °C (−4 to +212 °F)	−20 to +150 °C (−4 to +302 °F)	C
NBR	FDA 21 CFR 177.2600	−10 to +100 °C (+14 to +212 °F)	-	F
NBR, low temperature	-	−40 to +100 °C (−40 to +212 °F)	-	H
HNBR	FDA 21 CFR 177.2600, 3A Class I, AFNOR, BAM	−25 to +100 °C (−13 to +212 °F)	−20 to +100 °C (−4 to +212 °F)	G
EPDM 70	FDA 21 CFR 177.2600	−40 to +100 °C (−40 to +212 °F)	-	J
EPDM 331	FDA 21 CFR 177.2600, 3A Class II, USP Class VI, DVGW (UBA "KTW", W270), NSF61	−20 to +100 °C (−4 to +212 °F)	−20 to +150 °C (−4 to +302 °F)	K
FFKM Kalrez 6375	-	+5 to +100 °C (+41 to +212 °F)	-	L
FFKM Kalrez 7075	-	+5 to +100 °C (+41 to +212 °F)	-	M
FFKM Kalrez 6221	FDA 21 CFR 177.2600, USP Class VI	−5 to +100 °C (+23 to +212 °F)	−5 to +150 °C (+23 to +302 °F)	N

Seal	Notes	Process temperature range		Option [1]
		Thread/flange	Hygienic process connections	
Fluoroprene XP40	FDA 21 CFR 177.2600, USP Class VI, 3A Class I	+5 to +100 °C (+41 to +212 °F)	+5 to +150 °C (+41 to +302 °F)	P
VMQ silicone	FDA 21 CFR 177.2600	−35 to +85 °C (−31 to +185 °F)	−20 to +85 °C (−4 to +185 °F)	S

1) Product Configurator, order code for "Seal"
2) With "HB" option, see Product Configurator, order code for "Service"

Applications with jumps in temperature

Extreme jumps in temperature can result in temporary measurement errors. Temperature compensation takes effect after a few minutes. Internal temperature compensation is faster the smaller the jump in temperature and the longer the time interval involved.

For further information please contact your local Endress+Hauser Sales Center.

PMP51 (with metallic process membrane)

Designation	Limits
Process connections with internal process membrane	−40 to +125 °C (−40 to +257 °F)
Process connections with flush process membrane [1]	−40 to +100 °C (−40 to +212 °F)
Hygienic process connections	−40 to +130 °C (−40 to +266 °F) For a maximum of 60 minutes: 150 °C (302 °F)

1) Process connection GRC, GRJ, GZJ, G0J, G7J, G8J: Supplied seal to −20 °C (−4 °F) process temperature

PMP55 (with diaphragm seal)

Depends on diaphragm seal and fill fluid: −70 °C (−94 °F) up to +400 °C (+752 °F). Observe the temperature application limits → 119.

Diaphragm seal with tantalum process membrane

−70 to +300 °C (−94 to +572 °F)

Devices with PTFE-coated process membrane

The non-stick coating has excellent gliding properties and is used to protect the process membrane against abrasive media.

NOTICE

Incorrect use of the PTFE foil will destroy the device!

- The PTFE foil is designed to protect the unit against abrasion. It does not provide protection against corrosive media.

Range of application of the PTFE foil

For the range of application of the 0.25 mm (0.01 in) PTFE foil on an AISI 316L (1.4404/1.4435) process membrane, see the following graphic:

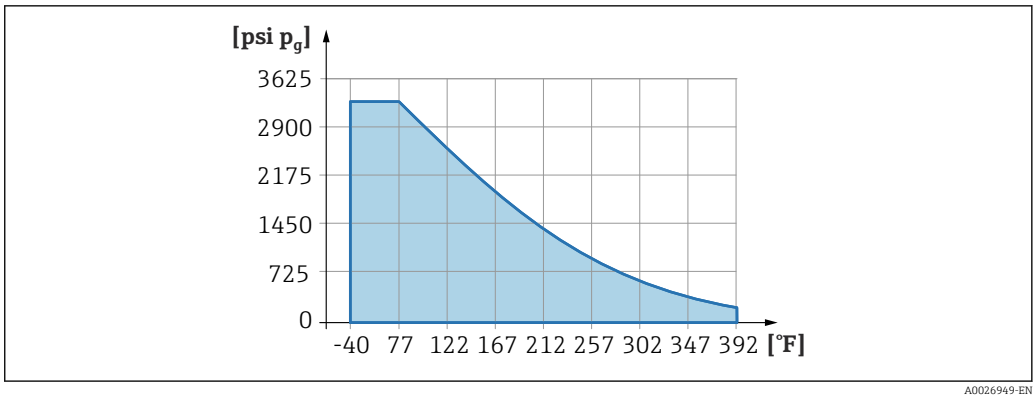

A0026949-EN

For vacuum applications: p_{abs} ≤ 1 bar (14.5 psi) to 0.05 bar (0.725 psi) up to max. +150 °C (302 °F).

Process temperature limits of flexible capillary armoring: PMP55

- 316L: No restrictions
- PTFE: No restrictions
- PVC: See the following diagram

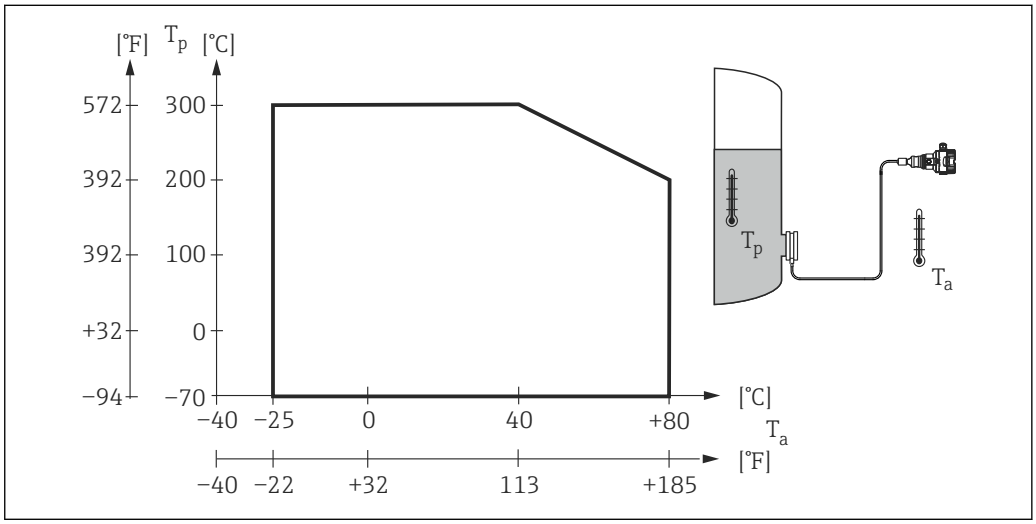

A0028227

Pressure specifications

⚠ WARNING

The maximum pressure for the measuring instrument depends on the lowest-rated element with regard to pressure (components are: process connection, optional mounted parts or accessories).

- Only operate the measuring instrument within the prescribed limits of the components!
- MWP (maximum working pressure): The MWP is specified on the nameplate. This value refers to a reference temperature of +20 °C (+68 °F) and may be applied to the device for an unlimited time. Note temperature dependence of MWP. For flanges, refer to the following standards for the permitted pressure values at higher temperatures: EN 1092-1 (with regard to their stability/ temperature property, the materials 1.4435 and 1.4404 are grouped together under EN 1092-1; the chemical composition of the two materials can be identical.), ASME B 16.5a, JIS B 2220 (the latest version of the standard applies in each case). MWP data that deviate from this are provided in the relevant sections of the Technical Information.
- The overload limit is the maximum pressure that a device may be subjected to during a test. It exceeds the maximum operating pressure by a certain factor. This value refers to a reference temperature of +20 °C (+68 °F).
- The Pressure Equipment Directive (2014/68/EU) uses the abbreviation "PS". The abbreviation "PS" corresponds to the MWP (maximum working pressure) of the measuring instrument.
- In the case of measuring cell range and process connection combinations where the overpressure limit (OPL) of the process connection is less than the nominal value of the measuring cell, the device is set at the factory, at the very maximum, to the OPL value of the process connection. If the entire measuring cell range must be used, select a process connection with a higher OPL value (1.5 x MWP; MWP = PN).
- Oxygen applications: In oxygen applications, the values for "p_{max} and T_{max} for oxygen applications may not be exceeded.
- Devices with ceramic process membrane: Avoid steam hammering! Steam hammering can cause zero point drift. Recommendation: Residue (such as condensation or drops of water) can remain on the process membrane after CIP cleaning and lead to local steam hammering if steam cleaning is performed again. In practice, drying the process membrane (e.g. by blowing off excess moisture) has proven to be a successful way of avoiding steam hammering.

Burst pressure

Device	Measuring range	Burst pressure
PMP51 [1)]	400 mbar (6 psi)...10 bar (150 psi)	100 bar (1 450 psi)
	40 bar (600 psi)	250 bar (3 625 psi)
	100 bar (1 500 psi)	1 000 bar (14 500 psi)
	400 bar (6 000 psi)	2 000 bar (29 000 psi)

1) PMP55 with mounted diaphragm seal system, PMC51 with ceramic process membrane and the universal adapter process connection are exceptions.

Mechanical construction

Device height

The device height is calculated from

- the height of the housing
- the height of optional mounted parts such as temperature isolators or capillaries
- the height of the relevant process connection.

The individual heights of the components are listed in the following sections. To calculate the device height simply add up the individual heights of the components. If necessary, the installation clearance (the space used to install the device) must also be taken into account. You can use the following table for this:

Section	Page	Height	Example
Height of housing	→ 47 ff.	(A)	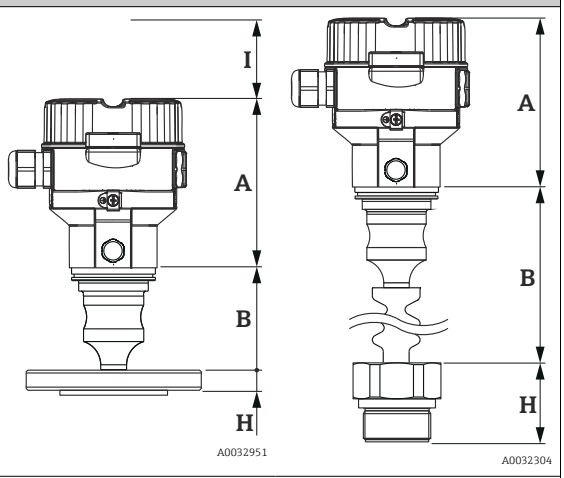
Optional mounted parts	→ 78	(B)	
Process connections	→ 49 → 63	(H)	
Installation clearance	-	(I)	
Device height			

F31 housing, aluminum

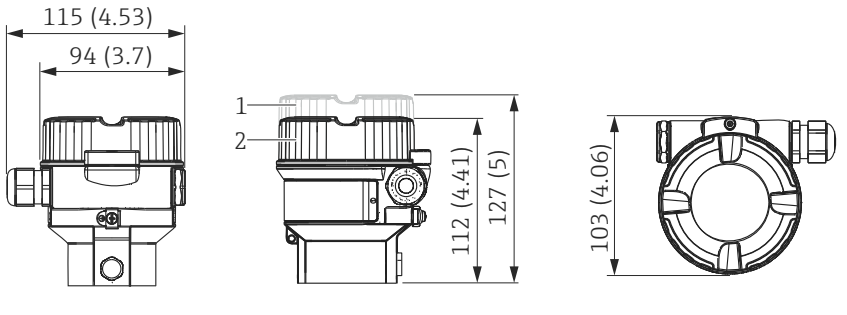

1 Cover with viewing window
2 Cover without viewing window

Engineering unit mm (in). Front view, left-hand side view, top view

Material	Weight kg (lbs)		Option [1]
	With display	Without display	
Aluminium [2]	1.1 (2.43)	1.0 (2.21)	I
Aluminum with glass viewing window [2]			J

1) Product Configurator, "Housing" ordering feature
2) Degree of protection dependent on cable entry used → 41

F15 housing, stainless steel (hygienic)

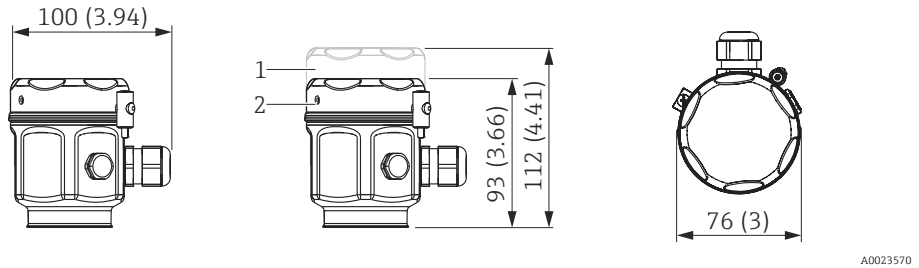

1 Cover with viewing window
2 Cover without viewing window

Engineering unit mm (in). Front view, left-hand side view, top view
Thread depth of cable gland 10 mm (0.39 in) max.

Material	Weight kg (lbs)		Option [1]
	With display	Without display	
Stainless steel [2]	1.1 (2.43)	1.0 (2.21)	Q
Stainless steel with glass viewing window [2]			R
Stainless steel with plastic viewing window [2]			S

1) Product Configurator, "Housing" ordering feature
2) Degree of protection depends on the cable entry used → 🖹 41

Explanation of terms

- DN or NPS or A = alphanumeric designation of the flange size
- PN or Class or K = alphanumeric pressure rating of a component

PMC51: height H

Process connection	F31 housing	F15 housing
FNPT1/2 MNPT1/2 MNPT1/2 FNPT1/4 G1/2 G1/2 M20x1.5 B0202 B0203	28 mm (1.1 in)	34 mm (1.34 in)
MNPT1-1/2 MNPT2 G1-1/2 G2 M44x1.25	59 mm (2.32 in)	66 mm (2.6 in)
Flanges	83 mm (3.27 in)	90 mm (3.54 in)
Hygienic process connections	90 mm (3.54 in)	97 mm (3.82 in)

PMC51: Process connections with internal process membrane

ISO 228 G thread

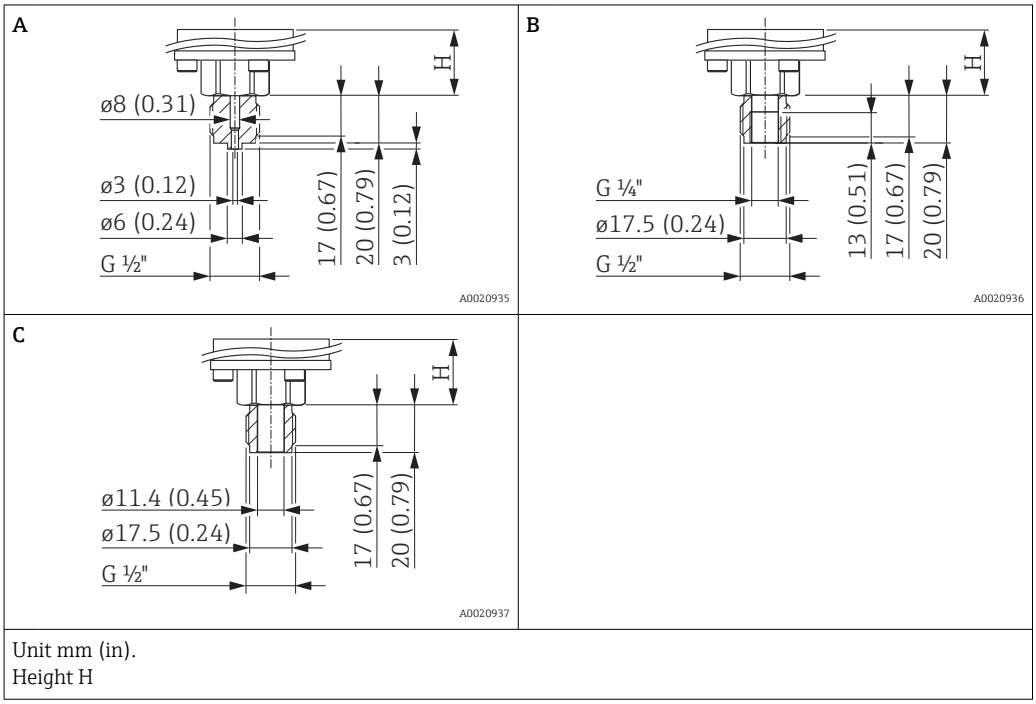

Unit mm (in).
Height H

Item	Designation	Material	Weight [1]	Option [2]
			kg (lb)	
A	ISO 228 G ½" A EN 837 thread	AISI 316L	0.60 (1.32)	GCJ
		Alloy C276 (2.4819)		GCC
		PVDF ▪ Mount only with enclosed mounting bracket ▪ MWP 10 bar (150 psi), OPL max. 15 bar (225 psi) ▪ Process temperature range: −10 to +60 °C (+14 to +140 °F)		GCF
B	ISO 228 G ½" A thread, G ¼" (female)	AISI 316L		GLJ
		Alloy C276 (2.4819)		GLC
C	ISO 228 G ½" A thread, bore 11.4 mm (0.45 in)	AISI 316L		GMJ
		Alloy C276 (2.4819)		GMC

1) Total weight consisting of measuring cell assembly and process connection.
2) Product Configurator, order code for "Process connection"

ANSI thread

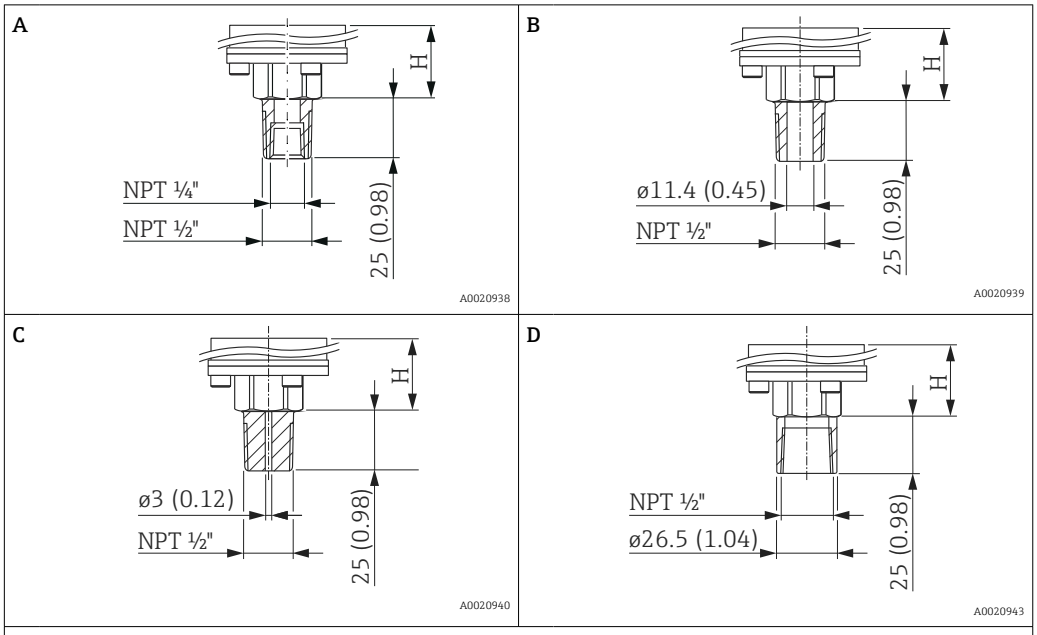

Unit mm (in).
Height H

Item	Designation	Material	Weight [1]	Option [2]
			kg (lb)	
A	ANSI ½" MNPT, ¼" FNPT	AISI 316L	0.60 (1.32)	RLJ
		Alloy C276 (2.4819)		RLC
B	ANSI ½" MNPT, Bore 11.4 mm (0.45 in)	AISI 316L		RKJ
		Alloy C276 (2.4819)		RKC
C	ANSI ½" MNPT, Bore 3 mm (0.12 in)	**PVDF** ▪ Mount only with enclosed mounting bracket ▪ MWP 10 bar (150 psi), OPL max. 15 bar (225 psi) ▪ Process temperature range: +10 to +60 °C (+14 to +140 °F)		RJF
D	ANSI ½" FNPT Bore 11.4 mm (0.45 in)	AISI 316L		R1J
		Alloy C276 (2.4819)		R1C

1) Total weight consisting of measuring cell assembly and process connection.
2) Product Configurator, order code for "Process connection"

PMC51: Process connections with internal process membrane

JIS thread

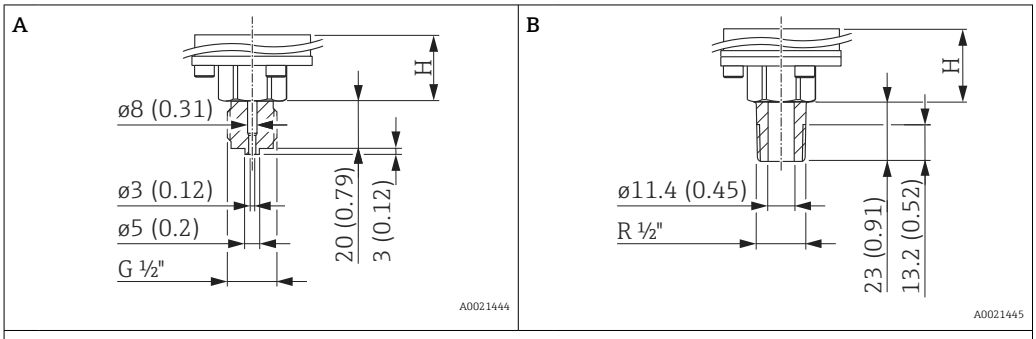

Unit mm (in).
Height H

Item	Designation	Material	Weight [1]	Option [2]
			kg (lb)	
A	JIS B0202 G ½" (male)	AISI 316L	0.60 (1.32)	GNJ
B	JIS B0203 R ½" (male)			GOJ

1) Total weight consisting of measuring cell assembly and process connection.
2) Product Configurator, order code for "Process connection"

DIN 13 thread

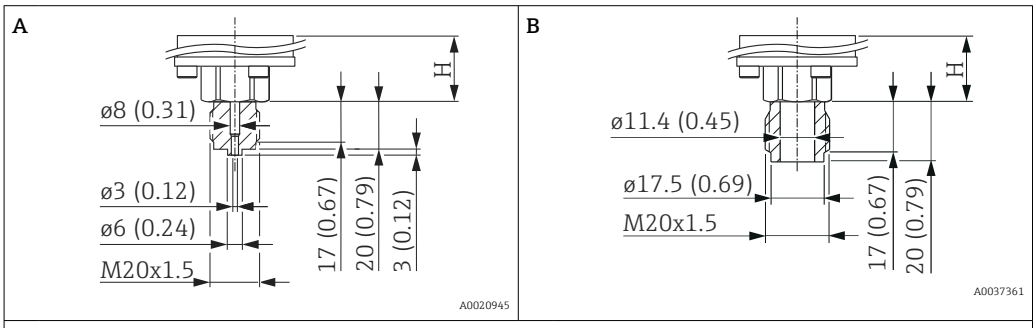

Unit mm (in). Height H

Item	Designation	Material	Weight [1]	Option [2]
			kg (lb)	
A	DIN 13 M20 x 1.5, EN 837 bore 3 mm (0.12 in)	AISI 316L	0.60 (1.32)	G5J
		Alloy C276 (2.4819)		G6J
B	DIN 13 M20 x 1.5 11.4 mm (0.45 in)	AISI 316L		G1J

1) Total weight consisting of measuring cell assembly and process connection.
2) Product Configurator, order code for "Process connection"

PMC51: Process connections with flush process membrane

DIN 13 thread

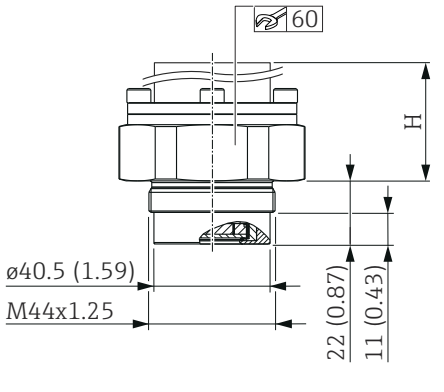

Unit mm (in).
Height H

Designation	Material	Weight [1]	Option [2]
		kg (lb)	
DIN 13 M44 x 1.25	AISI 316L	0.90 (1.98)	G4J

1) Total weight consisting of measuring cell assembly and process connection.
2) Product Configurator, order code for "Process connection"

ISO 228 G thread

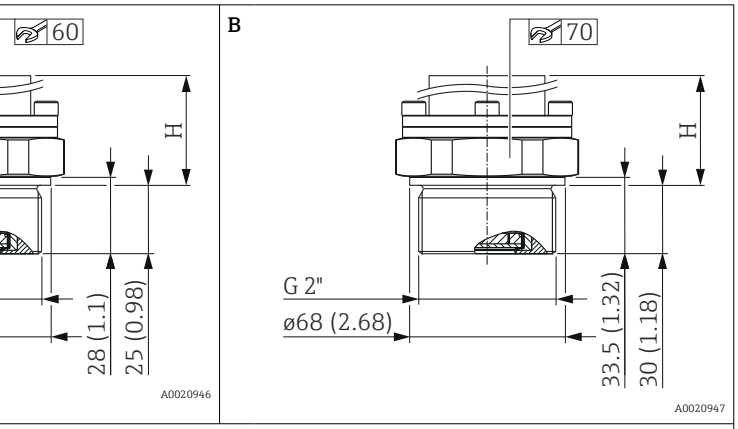

Unit mm (in).
Height H

Item	Designation	Material	Weight [1]	Option [2]
			kg (lb)	
A	ISO 228 G 1 ½" A thread	AISI 316L	0.8 (1.76)	GVJ
B	ISO 228 G 2" A thread	AISI 316L	1.2 (2.65)	GWJ

1) Total weight consisting of measuring cell assembly and process connection.
2) Product Configurator, order code for "Process connection"

PMC51: Process connections with flush process membrane

ANSI thread

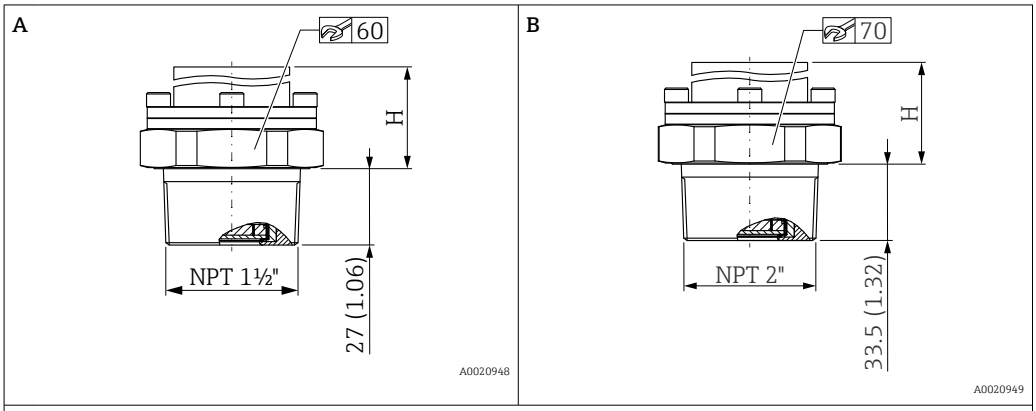

Unit mm (in).
Height H

Item	Designation	Material	Weight [1]	Approval [2]	Option [3]
			kg (lb)		
A	ANSI 1 ½" MNPT thread	AISI 316L	0.80 (1.76)	CRN	U7J
B	ANSI 2" MNPT thread	AISI 316L	1.20 (2.65)	CRN	U8J

1) Total weight consisting of measuring cell assembly and process connection.
2) CSA approval: Product Configurator, order code for "Approval"
3) Product Configurator, order code for "Process connection"

PMC51: Process connections with flush process membrane

EN flanges, connection dimensions as per EN 1092-1

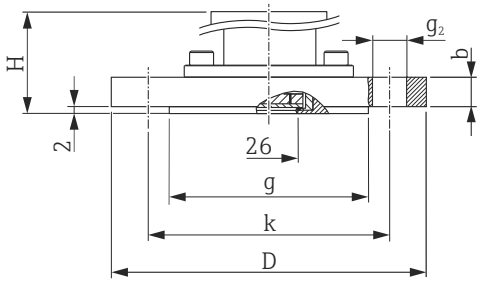

D *Diameter of flange*
b *Thickness*
g *Raised face*
k *Pitch diameter*
g_2 *Diameter of hole*

Unit mm.
Height H

Flange							Boltholes			Weight [1]	Option [2]
Material	DN	PN	Form	D	b	g	Quantity	g_2	k		
				mm	mm	mm		mm	mm	kg (lb)	
AISI 316L	DN 25	PN 10-40	B1	115	18	68	4	14	85	1.9 (4.19)	CNJ
AISI 316L	DN 32	PN 10-40	B1	140	18	78	4	18	100	2.5 (5.51)	CPJ
AISI 316L	DN 40	PN 10-40	B1	150	18	88	4	18	110	3.0 (6.62)	CQJ
ECTFE [3]	DN 40	PN 10-40	B2	150	21	88	4	18	110	3.0 (6.62)	CQP
AISI 316L	DN 50	PN 10-40	B1	165	20	102	4	18	125	3.5 (7.72)	CXJ
PVDF [4]	DN 50	PN 10-16	B2	165	21.4	102	4	18	125	1.4 (3.09)	CFF
ECTFE [3]	DN 50	PN 25-40	B2	165	20	102	4	18	125	3.7 (8.16)	CRP
AISI 316L	DN 80	PN 10-40	B1	200	24	138	8	18	160	5.8 (12.79)	CZJ
ECTFE [3]	DN 80	PN 25-40	B2	200	24	138	8	18	160	5.2 (11.47)	CSP

1) Total weight consisting of measuring cell assembly and process connection.
2) Product Configurator, order code for "Process connection"
3) ECTFE coating on AISI 316L (1.4404). When operating in hazardous areas, avoid electrostatic charging of the plastic surfaces.
4) MWP 10 bar (150 psi), OPL max. 15 bar (225 psi); process temperature range: −10 to +60 °C (+14 to +140 °F)

ASME flanges, connection dimensions as per ASME B 16.5, raised face RF

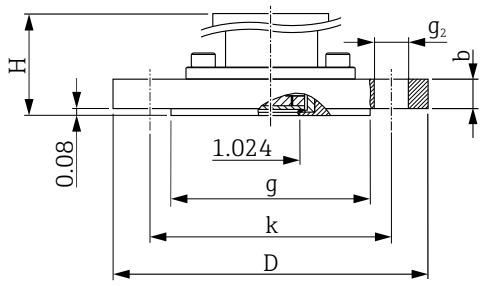

D *Diameter of flange*
b *Thickness*
g *Raised face*
k *Pitch diameter*
g_2 *Diameter of hole*

Unit in.
Height H

Flange						Boltholes			Weight [1]	Option [2]
Material	NPS	Class	D	b	g	Quantity	g_2	k		
	[in]	[lb./sq.in]	[in]	[in]	[in]		[in]	[in]	[kg (lb)]	
AISI 316/316L [3]	1	150	4.25	1.18	2	4	0.62	3.12	2.3 (5.07)	ACJ [4]
AISI 316/316L [3]	1	300	4.88	1.18	2	4	0.75	3.5	8.5 (18.74)	ANJ [4]
AISI 316/316L [3]	1 ½	150	5	0.69	2.88	4	0.62	3.88	2.1 (4.63)	AEJ
AISI 316/316L [3]	1 ½	300	6.12	0.81	2.88	4	0.88	4.5	3.3 (7.28)	AQJ
AISI 316/316L [3]	2	150	6	0.75	3.62	4	0.75	4.75	3.1 (6.84)	AFJ
ECTFE [5]	2	150	6	0.75	3.62	4	0.75	4.75	3.1 (6.84)	AFN
PVDF [6]	2	150	6	0.75	3.62	4	0.75	4.75	0.5 (1.1)	AFF
AISI 316/316L [3]	2	300	6.5	0.88	3.62	8	0.75	5	4.0 (8.82)	ARJ
AISI 316/316L [3]	3	150	7.5	0.94	5	4	0.75	6	5.7 (12.57)	AGJ
ECTFE [5]	3	150	7.5	0.94	5	4	0.75	6	5.7 (12.57)	AGN
PVDF [6]	3	150	7.5	0.94	5	4	0.75	6	1.6 (3.53)	AGF
AISI 316/316L [3]	3	300	8.25	1.12	5	8	0.88	6.62	7.5 (16.54)	ASJ
AISI 316/316L [3]	4	150	9	0.94	6.19	8	0.75	7.5	7.6 (16.76)	AHJ
ECTFE [5]	4	150	9	0.94	6.19	8	0.75	7.5	7.8 (17.20)	AHN
AISI 316/316L [3]	4	300	10	1.25	6.19	8	0.88	7.88	12.4 (27.34)	ATJ

1) Total weight consisting of measuring cell assembly and process connection.
2) Product Configurator, order code for "Process connection"
3) Combination of AISI 316 for required pressure resistance and AISI 316L for required chemical resistance (dual rated)
4) Screws must be 15 mm (0.59 in) longer than the standard flange screws.
5) ECTFE coating on AISI 316/316L. When operating in hazardous areas, avoid electrostatic charging of the plastic surfaces.
6) MWP 10 bar (150 psi), OPL max. 15 bar (225 psi); process temperature range: −10 to +60 °C (+14 to +140 °F)

JIS flanges, connection dimensions as per JIS B 2220 BL, raised face RF

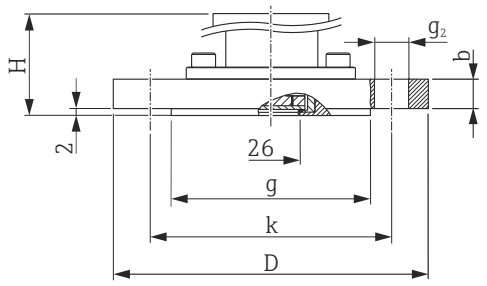

A0020955

D *Diameter of flange*
b *Thickness*
g *Raised face*
k *Pitch diameter*
g_2 *Diameter of hole*

Unit mm.
Height H

Flange						Boltholes			Weight [1]	Option [2]
Material	A	K	D	b	g	Quantity	g_2	k		
			mm	mm	mm		mm	mm	kg (lb)	
AISI 316L (1.4435)	50 A	10 K	155	16	96	4	19	120	2.9 (6.39)	KFJ
	80 A	10 K	185	18	127	8	19	150	3.9 (8.60)	KGJ
	100 A	10 K	210	18	151	8	19	175	5.3 (11.69)	KHJ

1) Total weight consisting of measuring cell assembly and process connection.
2) Product Configurator, order code for "Process connection"

PMC51: Process connections with flush process membrane

China standard flanges, connection dimensions HG/T 20592-2009 (DN flanges) or HG/T 20615-2009 ("-flanges), raised face RF

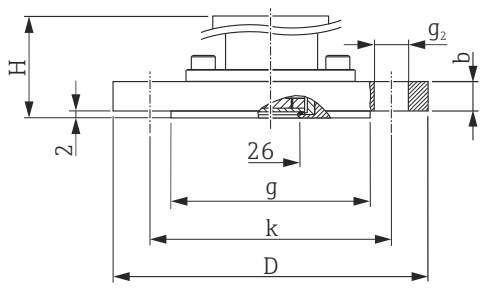

D *Diameter of flange*
b *Thickness*
g *Raised face*
k *Pitch diameter*
g_2 *Diameter of hole*
d_M *Max. diameter of the membrane*

Unit mm

Flange [1]						Boltholes			Weight	Option [2]
DN / NPS	PN / Class	D	b	g	m	Quantity	g_2	k		
		[mm]	[mm]	[mm]	[mm]		[mm]	[mm]	[kg (lb)]	
DN	PN									
DN50	40 bar	165	20	102	27.5	4	18	125	3 (6.6)	7HJ
DN80	40 bar	200	24	138	45.5	8	18	160	5.5 (12.13)	7KJ
[in]	Class									
2"	150lb./sq.in	150	17.5	92.1	22.55	4	18	120.7	2.2 (4.85)	7PJ
2"	300 lb./sq.in	165	20.7	92.1	22.55	8	18	127	3 (6.62)	7RJ
3"	150 lb./sq.in	190	22.3	127	40	4	18	152.4	4.7 (10.36)	7VJ
3"	300 lb./sq.in	210	27	127	40	8	22	168.3	6.6 (14.55)	7XJ

1) Material: AISI 316L
2) Product Configurator, order code for "Process connection"

PMC51 hygienic

Hygienic process connections with flush process membrane

In order to guarantee a hygiene approval, a seal with appropriate approval must be selected for the hygienic process connection:
- For 3A approval, you require a seal made of EPDM or HNBR → 43
- For EHEDG approval, you require a seal made of VMQ silicone, FFKM Kalrez → 43

A

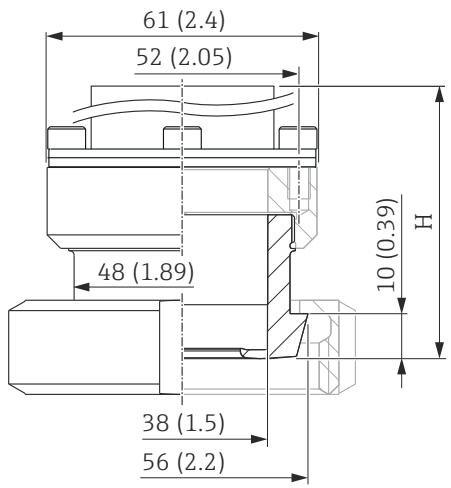

B

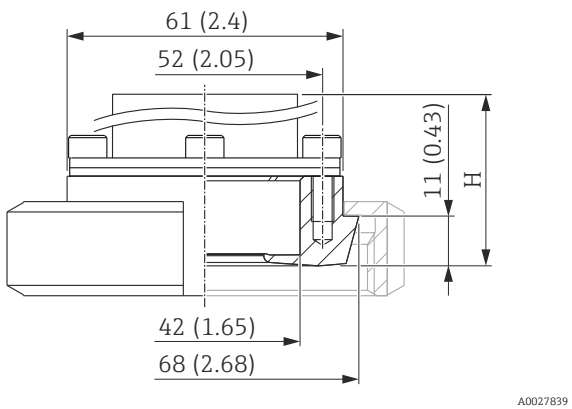

C

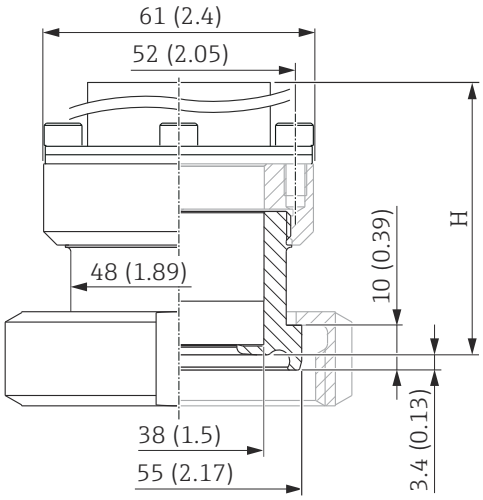

D

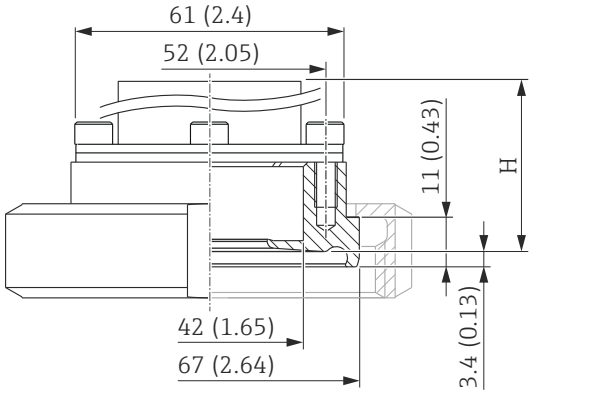

Unit mm (in)

Item	Designation	PN	Material [1]	Weight	Option [2]
				kg (lb) [3]	
A	DIN 11851 DN40	PN 25	AISI 316L (1.4435)	1.3 (2.87)	MZJ [4]
B	DIN 11851 DN50	PN 25		1.27 (2.80)	MRJ [4]
C	DIN 11864 DN40, DIN 11866-A pipe	PN 16		1.30 (2.87)	NCJ [4]
D	DIN 11864 DN50, DIN 11866-A pipe	PN 16		1.28 (2.82)	NDJ [4]

1) Delta ferrite content <1 %. The roughness of the surface in contact with the medium is R_a <0.76 µm (30 µin).
2) Product Configurator, order code for "Process connection"
3) Total weight consisting of the measuring cell assembly and the process connection.
4) Endress+Hauser supplies these slotted nuts in stainless steel AISI 304 (DIN/EN material number 1.4301) or in AISI 304L (DIN/EN material number 1.4307).

E

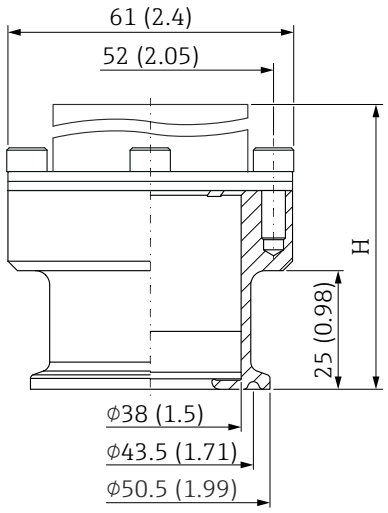

F

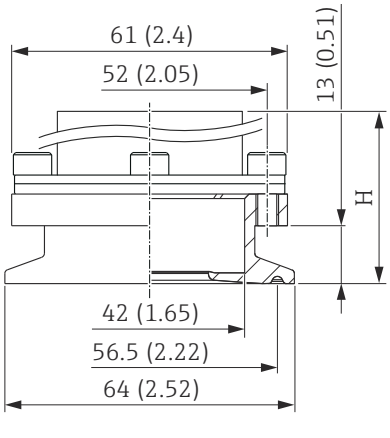

G

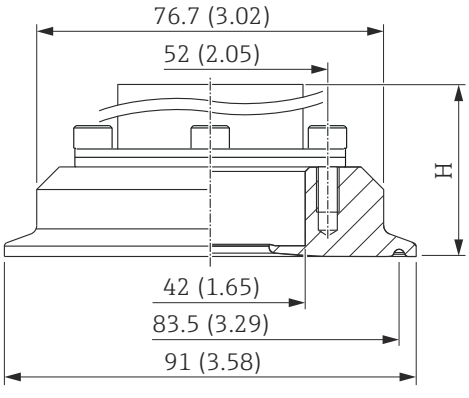

H

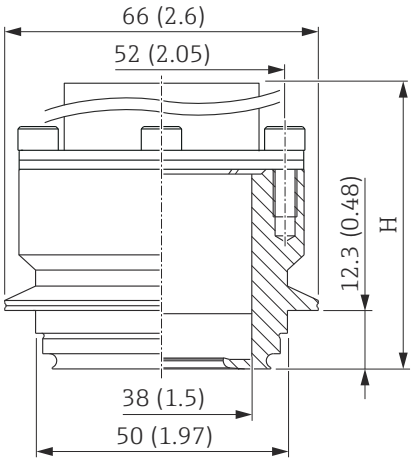

I

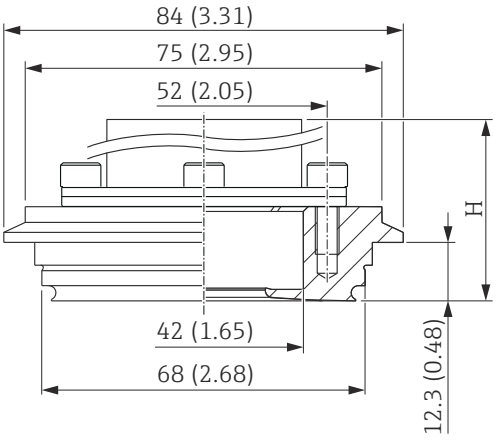

Unit mm (in)

Item	Designation	PN	Material [1]	Weight	Option [2]
				kg (lb) [3]	
E	Tri-Clamp ISO 2852, DN40-DN38 (1 1/2")	PN 40	AISI 316L (1.4435)	0.95 (2.09)	TJJ
F	Tri-Clamp ISO 2852, DN40-DN51 (2")	PN 40	AISI 316L (1.4435)	0.83 (1.83)	TDJ
G	Tri-Clamp ISO 2852, DN76.1 (3")	PN 40		1.2 (2.65)	TFJ

Item	Designation	PN	Material [1]	Weight	Option [2]
				kg (lb) [3]	
H	Varivent F pipe, DN25-32	PN 40		1.12 (2.47)	TQJ
I	Varivent N pipe, DN40–162	PN 40		1.09 (2.40)	TRJ

1) Delta ferrite content <1 %. The roughness of the surface in contact with the medium is R_a <0.76 µm (30 µin).
2) Product Configurator, order code for "Process connection"
3) Total weight consisting of the measuring cell assembly and the process connection.

J

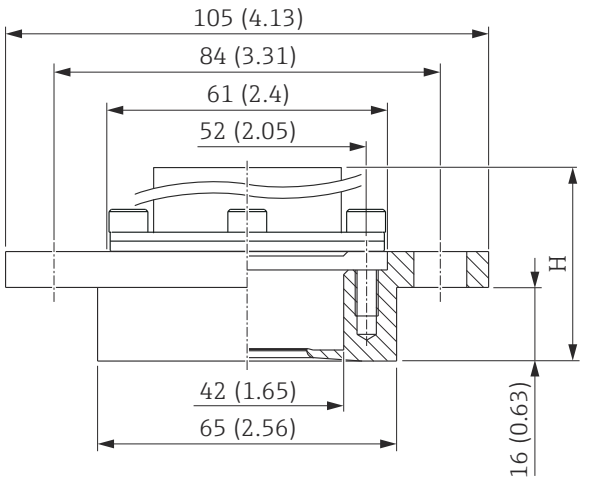

K

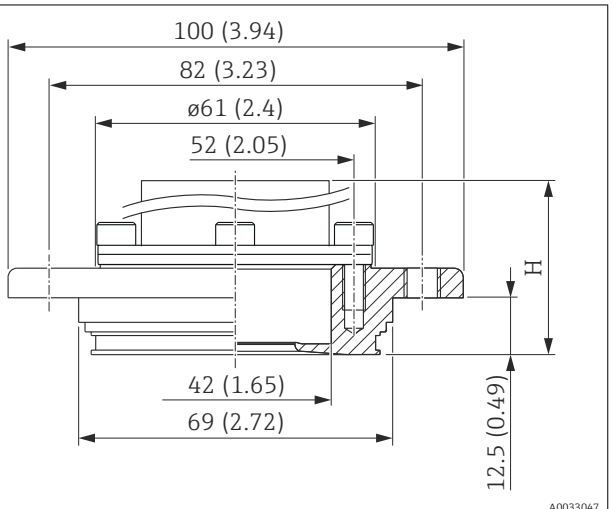

L

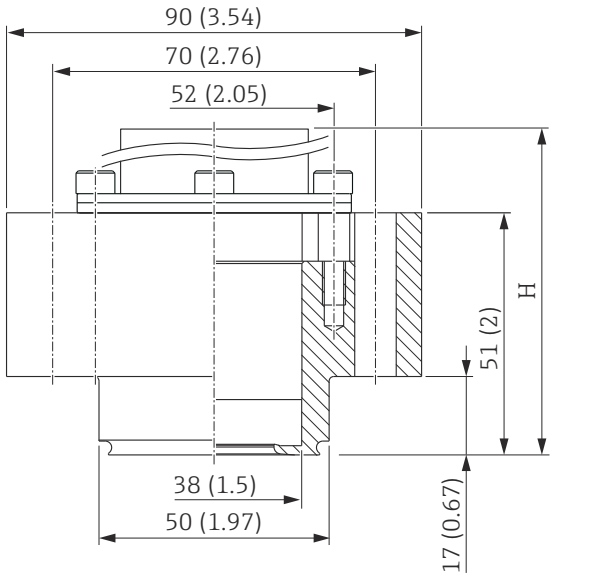

Unit mm (in)

Item	Designation	PN	Material [1]	Weight	Option [2]
				kg (lb) [3]	
J	DRD, DN50 (65 mm) slip-on flange	PN 25	AISI 316L (1.4435)	1.28 (2.82)	TIJ
K	APV inline, DN50	PN 25		1.18 (2.60)	TMJ
L	NEUMO BioControl, DN50	PN 16		1.99 (4.39)	S4J [4]

1) Delta ferrite content <1 %. The roughness of the surface in contact with the medium is R_a <0.76 µm (30 µin).
2) Product Configurator, order code for "Process connection"
3) Total weight consisting of the measuring cell assembly and the process connection.
4) 4 DIN 912 M8 x 45 screws are enclosed (material A4-80)

M

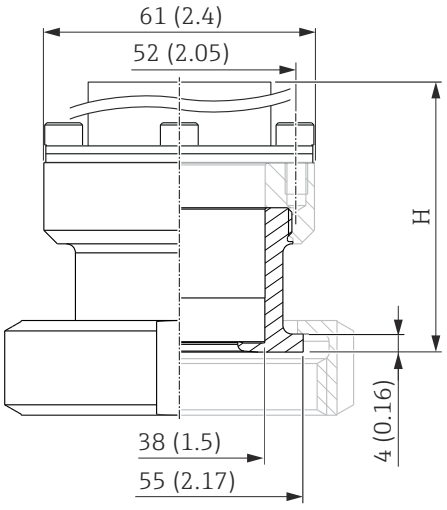

N

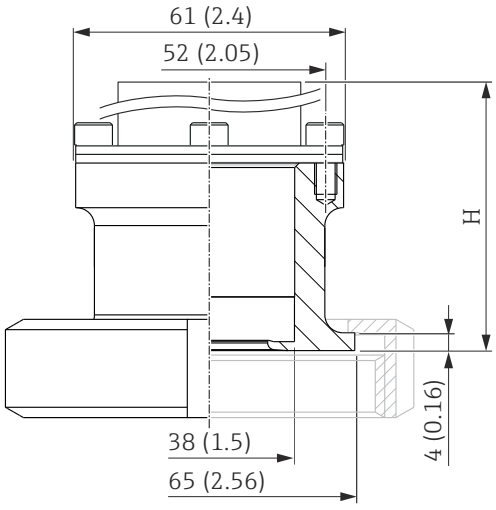

Unit mm (in)

Item	Designation	PN	Material [1]	Weight	Option [2]
				kg (lb) [3]	
M	SMS 1 ½"	PN 25	AISI 316L (1.4435)	1.27 (2.80)	TXJ [4]
N	SMS 2"	PN 25		1.39 (3.06)	T7J [4]

1) Delta ferrite content <1 %. The roughness of the surface in contact with the medium is R_a <0.76 µm (30 µin).
2) Product Configurator, order code for "Process connection"
3) Total weight consisting of the measuring cell assembly and the process connection.
4) Endress+Hauser supplies these slotted nuts in stainless steel AISI 304 (DIN/EN material number 1.4301) or in AISI 304L (DIN/EN material number 1.4307).

Universal process adapter

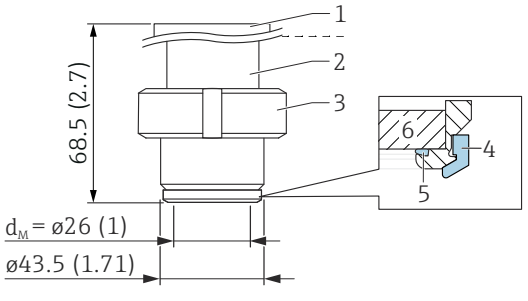

1 Top section: AISI 316L (1.4404)
2 Bottom section: AISI 316L (1.4435)
3 Slotted nut: AISI 304 (1.4301) or AISI 304L (1.4307)
4 Form seal: silicone or EPDM
5 Measuring cell seal
6 Ceramic measuring cell

Unit mm (in)

- The roughness of the surface in contact with the medium is R_a <0.76 µm (30 µin).
- Silicone form seal: FDA 21CFR177.2600/USP Class VI, order number: 52023572
- EPDM form seal: FDA, USP Class VI; 5 pcs, order number: 71100719

Designation	PN bar (psi)	Weight [kg (lb)] [2]	Option [1]
Universal process adapter Form seal made of silicone	10 (145)	0.74 (1.63)	UPJ
Universal process adapter Form seal made of EPDM			UNJ

1) Product Configurator, order code for "Process connection"
2) Total weight consisting of the measuring cell assembly and the process connection.

Material of the form seal (exchangeable seal)	Material of the measuring cell seal on ceramic sensor (seal not exchangeable)	Approval of measuring cell seal	Option [1]
Silicone	EPDM	FDA [2] 3A Class II, USP Class VI. DVGW, KTW, W270, WRAS, ACS, NSF61	K
EPDM	EPDM	FDA [2]	J
		FDA [2] 3A Class II, USP Class VI. DVGW, KTW, W270, WRAS, ACS, NSF61	K

1) Product Configurator, order code for "Seal"
2) Food-safe FDA 21 CFR 177.2600

PMP51: process connections with internal process membrane

ISO 228 G thread

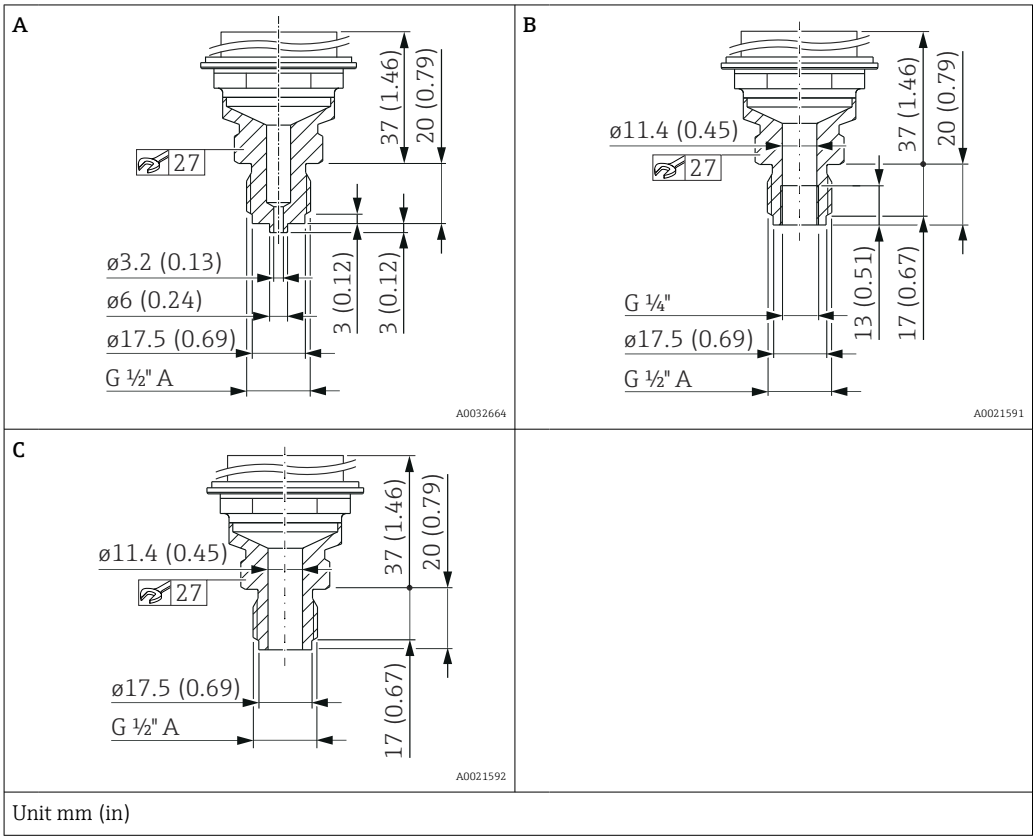

Unit mm (in)

Item	Designation	Material	Weight kg (lb)	Option [1]
A	ISO 228 G ½" A EN 837 thread	AISI 316L	0.63 (1.39)	GCJ
		Alloy C276 (2.4819)		GCC
B	ISO 228 G ½" A thread, G ¼" (female)	AISI 316L		GLJ
		Alloy C276 (2.4819)		GLC
C	ISO 228 G ½" A thread, Bore 11.4 mm (0.45 in)	AISI 316L		GMJ
		Alloy C276 (2.4819)		GMC

1) Product Configurator, order code for "Process connection"

DIN 13 thread

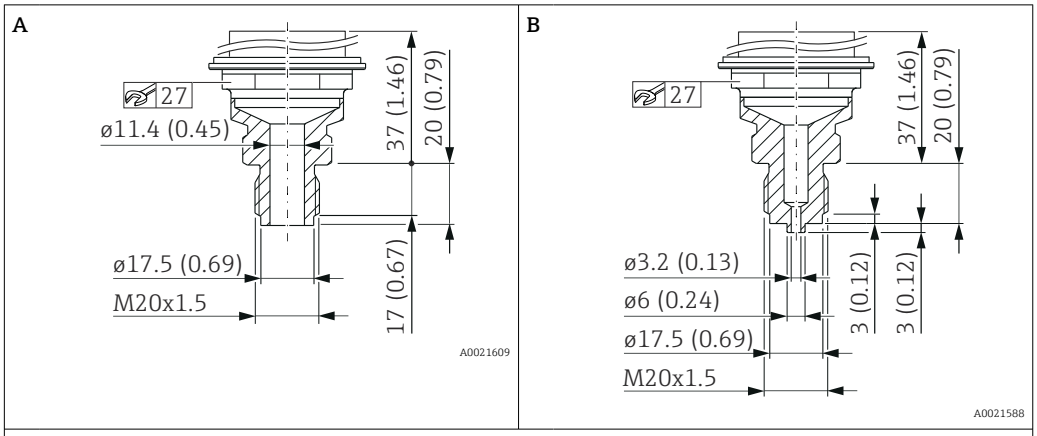

Unit mm (in)

Item	Designation	Material	Weight kg (lb)	Option [1]
A	DIN 13 M20 x 1.5 Bore 11.4 mm (0.45 in)	AISI 316L	0.6 (1.32)	G1J
		Alloy C276 (2.4819)		G2J
B	DIN 13 M20 x 1.5, EN 837, Bore 3 mm (0.12 in)	AISI 316L		G5J
		Alloy C276 (2.4819)		G6J

1) Product Configurator, order code for "Process connection"

PMP51: Process connections with internal process membrane

ANSI thread

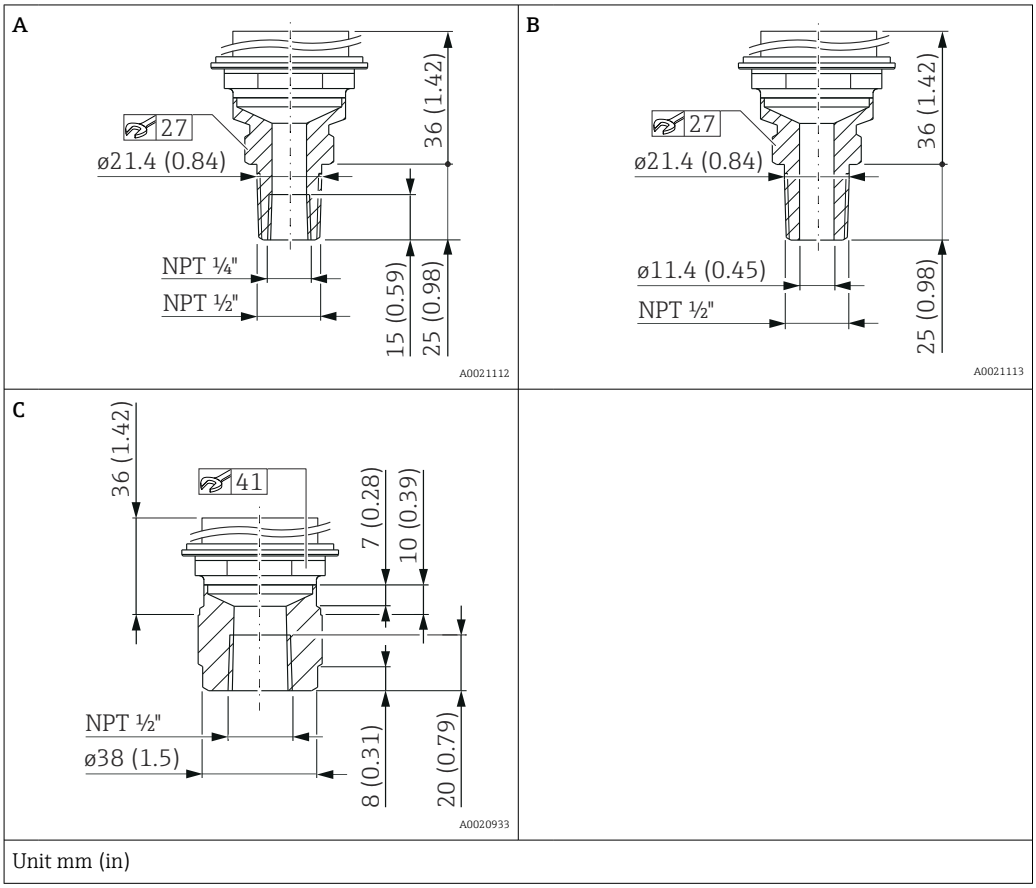

Unit mm (in)

Item	Designation	Material	Weight	Option [1]
			kg (lb)	
A	ANSI ½" MNPT, ¼" FNPT	AISI 316L	0.63 (1.39)	RLJ
		Alloy C276 (2.4819)		RLC
B	ANSI ½" MNPT, Bore 11.4 mm (0.45 in) = 400 bar (6 000 psi)	AISI 316L		RKJ
		Alloy C276 (2.4819)		RKC
C	ANSI ½" FNPT	AISI 316L	0.7 (1.54)	R1J
		Alloy C276 (2.4819)		R1C

1) Product Configurator, order code for "Process connection"

PMP51: Process connections with flush process membrane

ISO 228 G thread

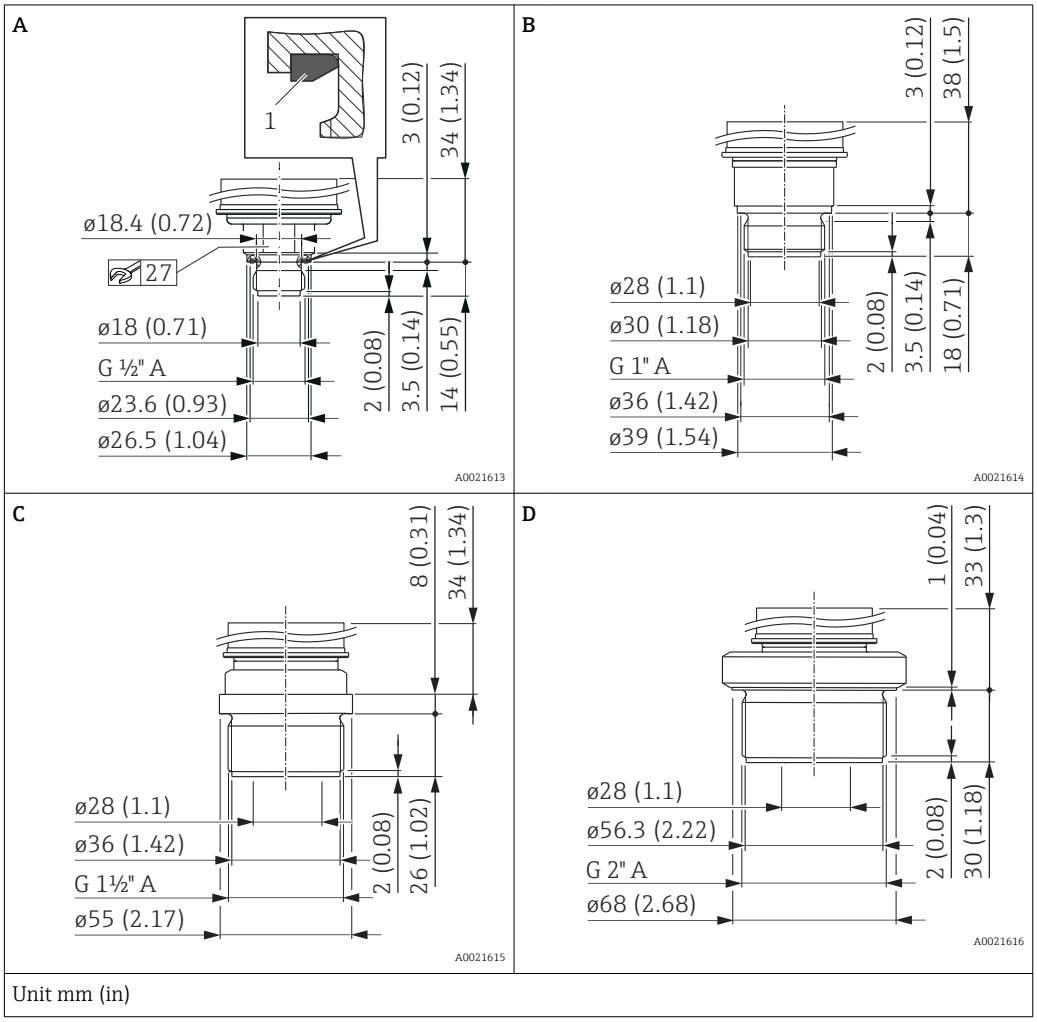

Unit mm (in)

Item	Designation	Material	Weight	Option [1]
			kg (lb)	
A	ISO 228 G ½" A DIN 3852 thread FKM form seal (item 1) pre-installed	AISI 316L	0.4 (0.88)	GRJ
		Alloy C276 (2.4819)		GRC
B	ISO 228 G 1" A thread	AISI 316L	0.7 (1.54)	GTJ
C	ISO 228 G 1 ½" A thread	AISI 316L	1.1 (2.43)	GVJ
D	ISO 228 G 2" A thread	AISI 316L	1.5 (3.31)	GWJ

1) Product Configurator, order code for "Process connection"

DIN 13 thread

A

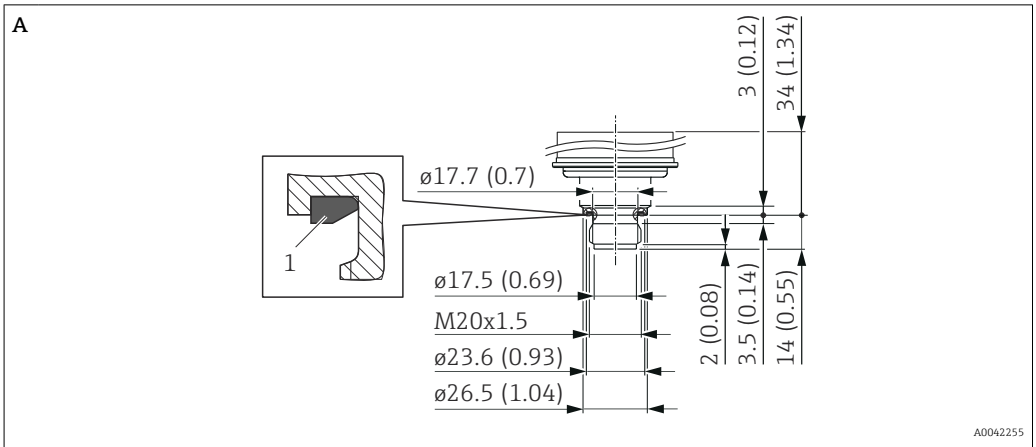

Unit mm (in)

Designation	Material	Weight	Option [1]
		kg (lb)	
DIN 13 M20 x 1.5 thread FKM 80 flat seal (item 1) pre-installed	AISI 316L	0.6 (1.32)	G7J
	Alloy C276 (2.4819)		G8J

1) Product Configurator, order code for "Process connection"

ANSI thread

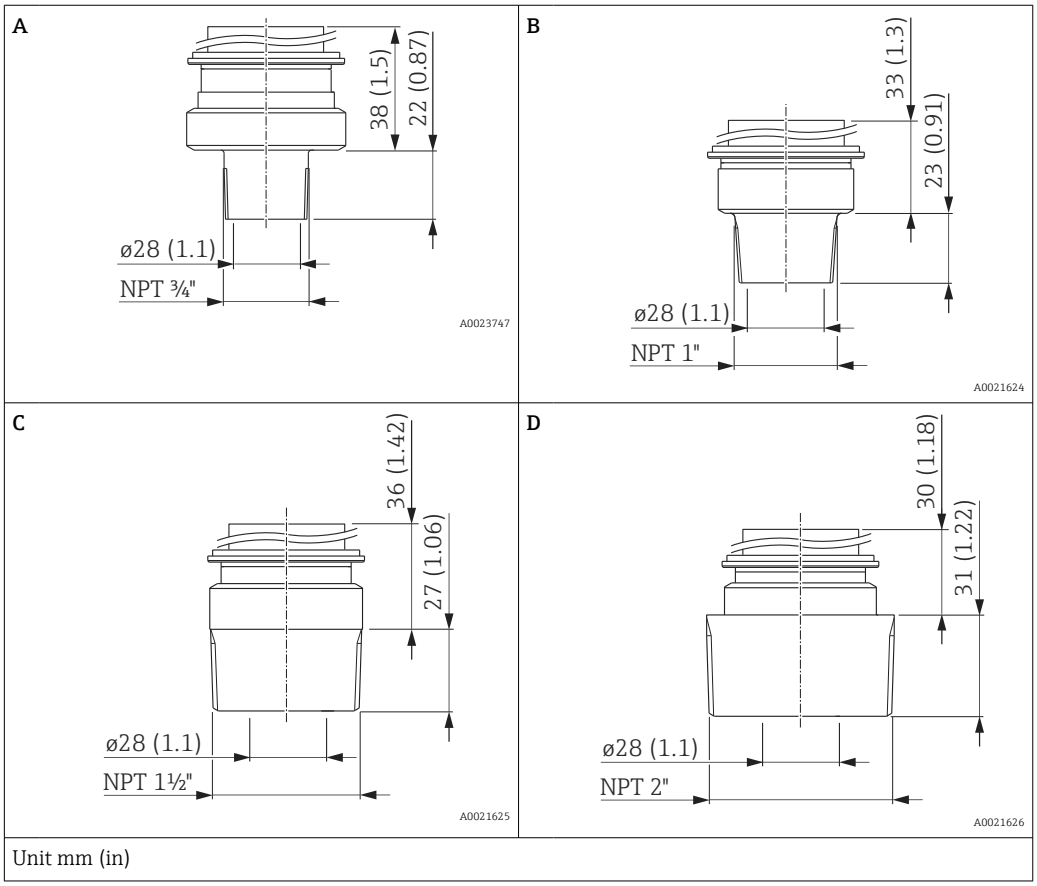

Unit mm (in)

Item	Designation	Material	Weight	Option [1]
			kg (lb)	
A	ANSI ¾" MNPT	AISI 316L	0.6 (1.32)	U4J
B	ANSI 1" MNPT		0.7 (1.54)	U5J
C	ANSI 1 ½" MNPT		1 (2.21)	U7J
D	ANSI 2" MNPT		1.3 (2.87)	U8J

1) Product Configurator, order code for "Process connection"

PMP51: Process connections with flush process membrane

EN flanges, connection dimensions as per EN 1092-1

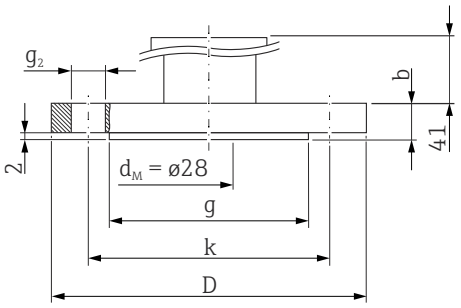

D *Diameter of flange*
b *Thickness*
g *Raised face*
k *Pitch diameter*
g_2 *Diameter of hole*
d_M *Max. diameter of the membrane*

Unit mm

Flange [1]						Boltholes			Weight Flange	Option [2]
DN	PN	Form	D	b	g	Quantity	g_2	k		
			[mm]	[mm]	[mm]		[mm]	[mm]	[kg (lb)]	
DN 25	PN 10-40	B1	115	18	68	4	14	85	1.2 (2.65)	CNJ
DN 32	PN 10-40	B1	140	18	78	4	18	100	1.9 (4.19)	CPJ
DN 40	PN 10-40	B1	150	18	88	4	18	110	2.2 (4.85)	CQJ
DN 50	PN 10-40	B1	165	20	102	4	18	125	3.0 (6.62)	CXJ
DN 80	PN 10-40	B1	200	24	138	8	18	160	5.3 (11.69)	CZJ

1) Material: AISI 316L
2) Product Configurator, order code for "Process connection"

PMP51: Process connections with flush process membrane

ASME flanges, connection dimensions as per ASME B 16.5, raised face RF

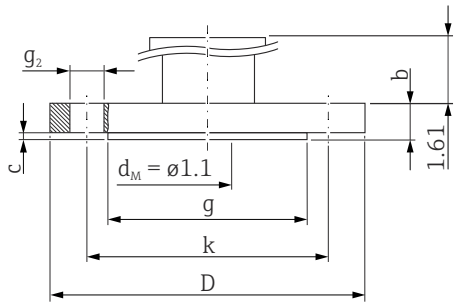

D *Diameter of flange*
b *Thickness*
g *Raised face*
c *Raised face*
k *Pitch diameter*
g_2 *Diameter of hole*
d_M *Max. diameter of the membrane*

Unit in.

Flange [1]						Boltholes			Weight	Option [2]
NPS	Class	D	b	g	c	Quantity	g_2	k		
[in]	lb./sq.in	[in]	[in]	[in]	[in]		[in]	[in]	[kg (lb)]	
1	150	4.25	0.61	2.44	0.08	4	0.62	3.13	1.1 (2.43)	ACJ
1	300	4.88	0.69	2.7	0.06	4	0.75	3.5	1.3 (2.87)	ANJ
1 ½	150	5	0.69	2.88	0.08	4	0.62	3.88	1.5 (3.31)	AEJ
1 ½	300	6.12	0.81	2.88	0.08	4	0.88	4.5	2.6 (5.73)	AQJ
2	150	6	0.75	3.62	0.08	4	0.75	4.75	2.4 (5.29)	AFJ
2	300	6.5	0.88	3.62	0.08	8	0.75	5	3.2 (7.06)	ARJ
3	150	7.5	0.94	5	0.08	4	0.75	6	4.9 (10.8)	AGJ
3	300	8.25	1.12	5	0.08	8	0.88	6.62	6.7 (14.77)	ASJ
4	150	9	0.94	6.19	0.08	8	0.75	7.5	7.1 (15.66)	AHJ
4	300	10	1.25	6.19	0.08	8	0.88	7.88	11.6 (25.88)	ATJ

1) Material: AISI 316/316L; Combination of AISI 316 for required pressure resistance and AISI 316L for required chemical resistance (dual rated)
2) Product Configurator, order code for "Process connection"

PMP51: Process connections with flush process membrane

China standard flanges, connection dimensions HG/T 20592-2009 (DN flanges) or HG/T 20615-2009 ("-flanges), raised face RF

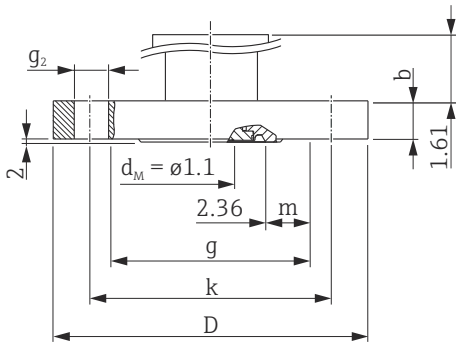

D *Diameter of flange*
b *Thickness*
g *Raised face*
k *Pitch diameter*
g_2 *Diameter of hole*
d_M *Max. diameter of the membrane*

Unit mm

Flange [1]						Boltholes			Weight	Option [2]
DN / NPS	PN / Class	D	b	g	m	Quantity	g_2	k		
		[mm]	[mm]	[mm]	[mm]		[mm]	[mm]	[kg (lb)]	
DN	PN									
DN50	40 bar	165	20	102	27.5	4	18	125	3 (6.6)	7HJ
DN80	40 bar	200	24	138	45.5	8	18	160	5.5 (12.13)	7KJ
[in]	Class									
2"	150lb./sq.in	150	17.5	92.1	22.55	4	18	120.7	2.2 (4.85)	7PJ
2"	300 lb./sq.in	165	20.7	92.1	22.55	8	18	127	3 (6.62)	7RJ
3"	150 lb./sq.in	190	22.3	127	40	4	18	152.4	4.7 (10.36)	7VJ
3"	300 lb./sq.in	210	27	127	40	8	22	168.3	6.6 (14.55)	7XJ

1) Material: AISI 316L
2) Product Configurator, order code for "Process connection"

PMP51 hygienic **Hygienic process connections with flush process membrane**

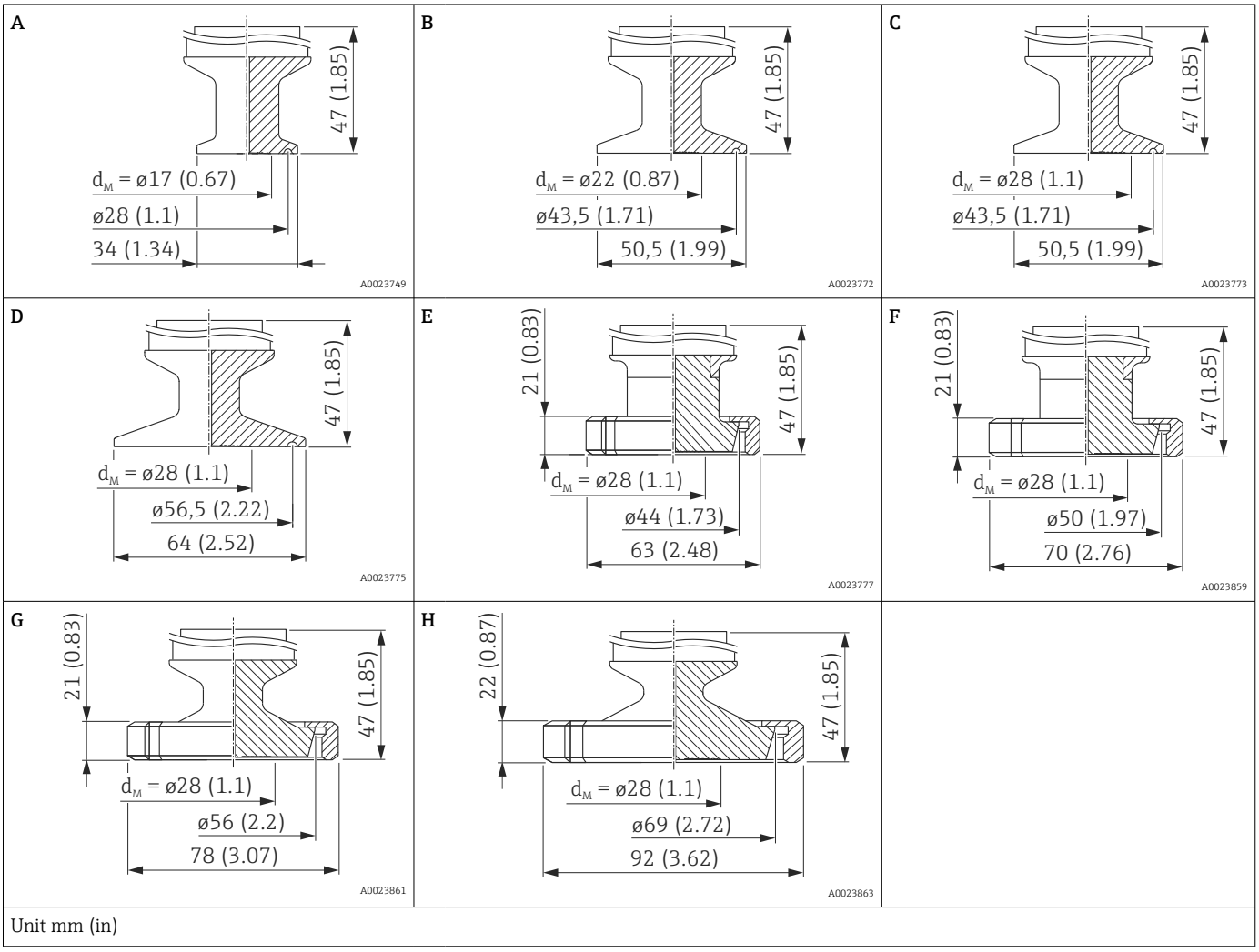

Unit mm (in)

Item [1) 2)]	Designation	PN	Weight	Option [3)]
			kg (lb) [4)]	
A	Clamp ISO2852, DN 18-22, DIN 32676 DN 15-20	PN 40	0.5 (1.10)	TBJ
B	Tri-Clamp ISO2852 DN 25 (1"), DIN 32676 DN 25	PN 40	0.6 (1.32)	TCJ
C	Tri-Clamp ISO2852 DN 38 (1½"), DIN 32676 DN 40	PN 40	0.95 (2.09)	TJJ
D	Tri-Clamp ISO2852 DN 40-51 (2"), DIN 32676 DN 50	PN 40	0.83 (1.83)	TDJ
E	DIN 11851 DN 25	PN 40	0.7 (1.54)	MXJ
F	DIN 11851 DN 32	PN 40	0.8 (1.76)	MIJ
G	DIN 11851 DN 40	PN 40	1.3 (2.87)	MZJ
H	DIN 11851 DN 50	PN 25	1.27 (2.80)	MRJ

1) Material: AISI 316L (1.4435)
2) The roughness of the surface in contact with the medium is R_a0.76 µm (30 µin). ASME BPE-compliant version optionally available for use in biochemical processes, surfaces in contact with the medium R_a0.38 µm (15 µin), electropolished; to be ordered using feature 570 "Service", option "HK" in the order code.
3) Product Configurator, order code for "Process connection"
4) Total weight consisting of the measuring cell assembly and the process connection.

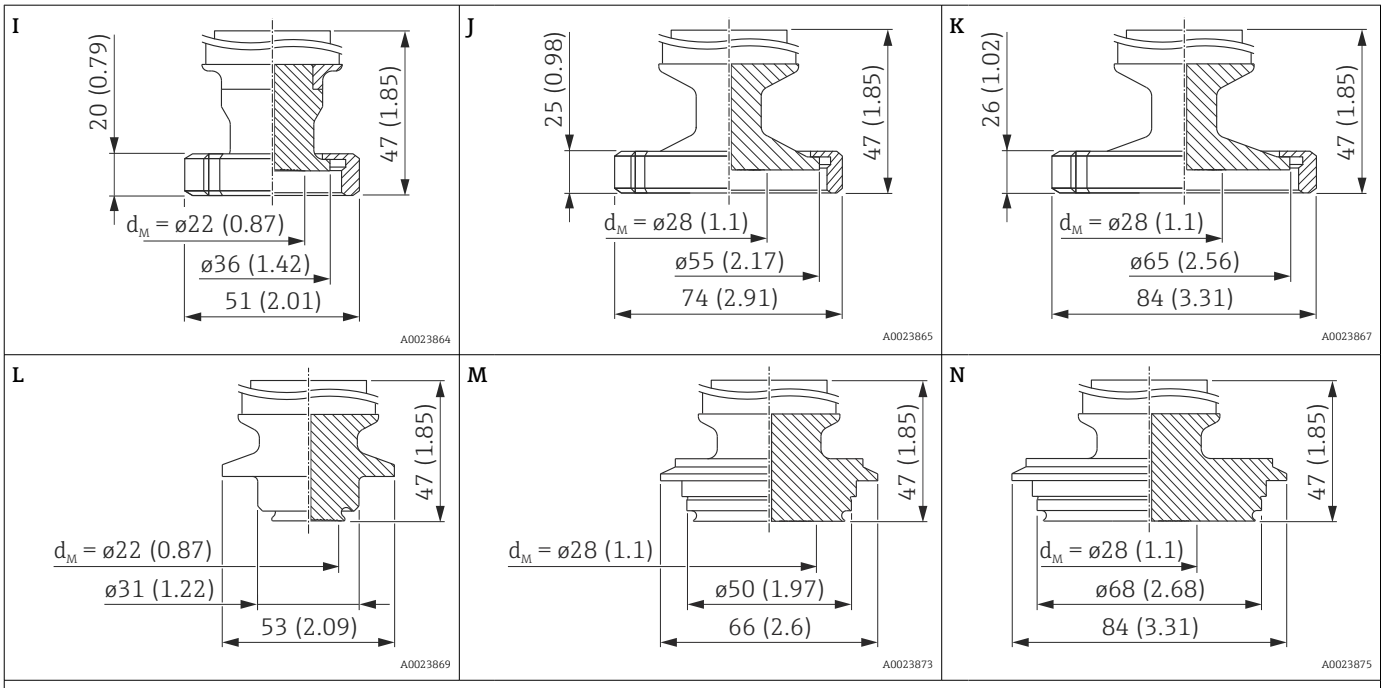

Unit mm (in)

Item [1) 2)]	Designation	PN	Weight	Option [3)]
			kg (lb) [4)]	
I	SMS 1"	PN 25	0.7 (1.54)	T6J
J	SMS 1½"	PN 25	1.27 (2.80)	T7J
K	SMS 2"	PN 25	1.39 (3.06)	TXJ
L	Varivent B pipe DN 10-15	PN 40	0.7 (1.54)	TPJ
M	Varivent F pipe DN 25-32	PN 40	1.12 (2.47)	TQJ
N	Varivent N pipe DN 40-162	PN 40	1.09 (2.40)	TRJ

1) Material: AISI 316L (1.4435)
2) The roughness of the surface in contact with the medium is R_a0.76 µm (30 µin). ASME BPE-compliant version optionally available for use in biochemical processes, surfaces in contact with the medium R_a0.38 µm (15 µin), electropolished; to be ordered using feature 570 "Service", option "HK" in the order code.
3) Product Configurator, order code for "Process connection"
4) Total weight consisting of the measuring cell assembly and the process connection.

O

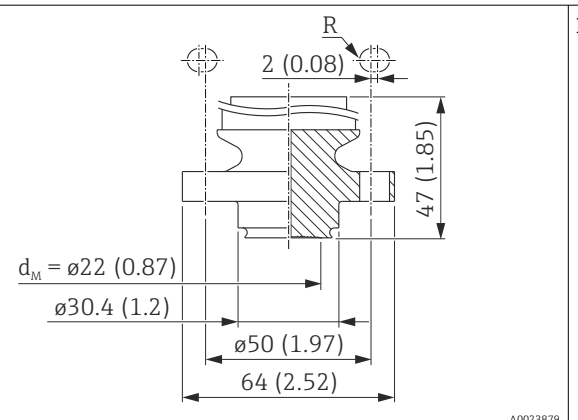

P

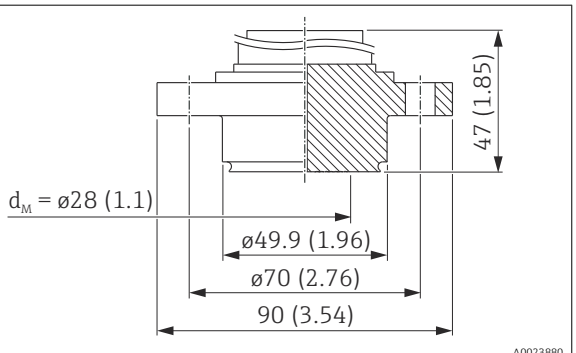

Q

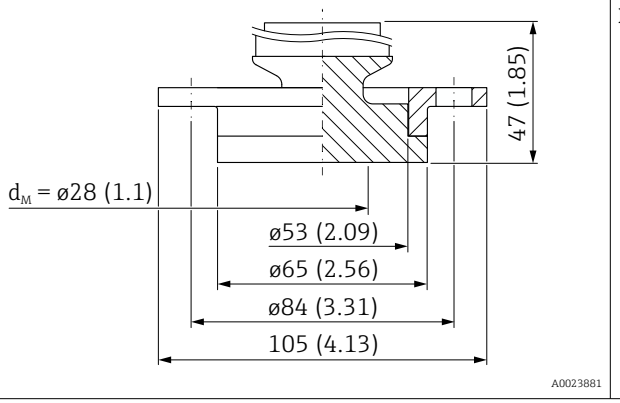

R

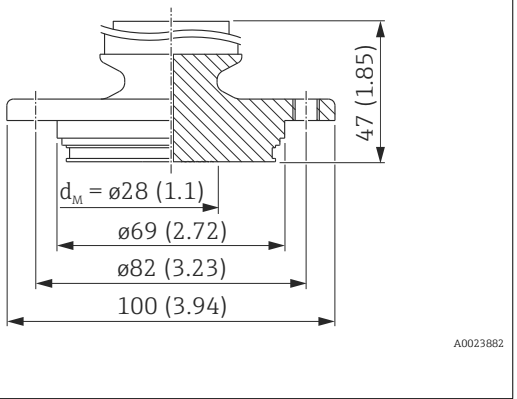

Unit mm (in)

Item [1) 2)]	Designation	PN	Boltholes		Weight	Option [3)]
			Quantity	Diameter	kg (lb) [4)]	
				mm (in)		
O	NEUMO BioControl D 25	PN 16	4	R: 3.5 (0.14)	0.8 (1.76)	S1J
P	NEUMO BioControl D 50	PN 16	4	9 (0.35)	1.99 (4.39)	S4J
Q	DRD DN 50 slip-on flange	PN 25	4	11.5 (0.45)	1.28 (2.82)	TIJ
R	APV Inline DN 50	PN 25	6	8.6 (0.34)	1.18 (2.60)	TPJ
			2	M8		

1) Material: AISI 316L (1.4435)
2) The roughness of the surface in contact with the medium is R_a0.76 µm (30 µin). ASME BPE-compliant version optionally available for use in biochemical processes, surfaces in contact with the medium R_a0.38 µm (15 µin), electropolished; to be ordered using feature 570 "Service", option "HK" in the order code.
3) Product Configurator, order code for "Process connection"
4) Total weight consisting of the measuring cell assembly and the process connection.

S

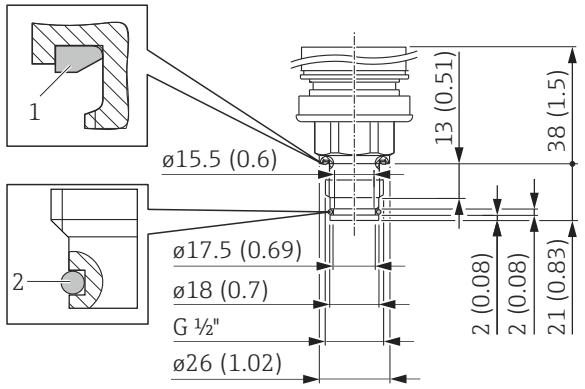

T

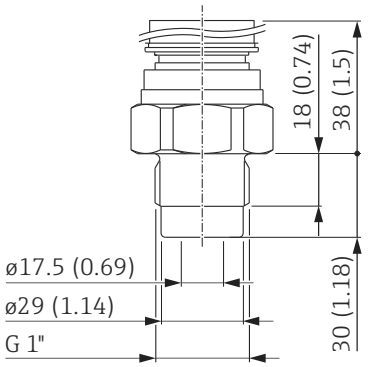

U

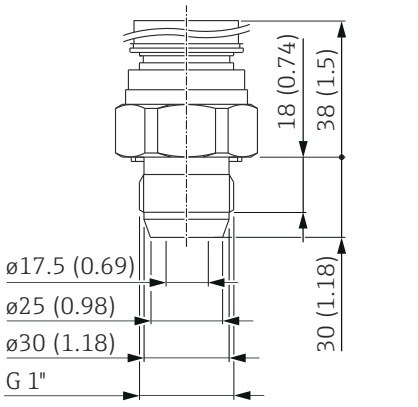

Unit mm (in)

Item [1) 2)]	Designation	Seal		PN	Weight	Option [3)]
		Item	Designation		kg (lb) [4)]	
S	ISO228 G ½" thread	1	FKM form seal pre-installed	PN 40	0.5 (1.1)	G0J
		2	FKM O-ring, pre-installed			
T	ISO228 G1" thread	-	Seal established via O-ring.	PN 40	0.8 (1.76)	GZJ [5)]
U	ISO228 G1" thread	1	Conical metal joint	PN 100	0.8 (1.76)	GXJ

1) Material: AISI 316L (1.4435)
2) The roughness of the surface in contact with the medium is R_a0.76 µm (30 µin). ASME BPE-compliant version optionally available for use in biochemical processes, surfaces in contact with the medium R_a0.38 µm (15 µin), electropolished; to be ordered using feature 570 "Service", option "HK" in the order code.
3) Product Configurator, order code for "Process connection"
4) Total weight consisting of the measuring cell assembly and the process connection.
5) EHEDG in conjunction with EHEDG-certified process adapter or weld-in adapter; for details, see TI00426F.

DA63M- valve manifold (optional)

Endress+Hauser supplies milled valve manifolds via the transmitter's product structure in the following versions:

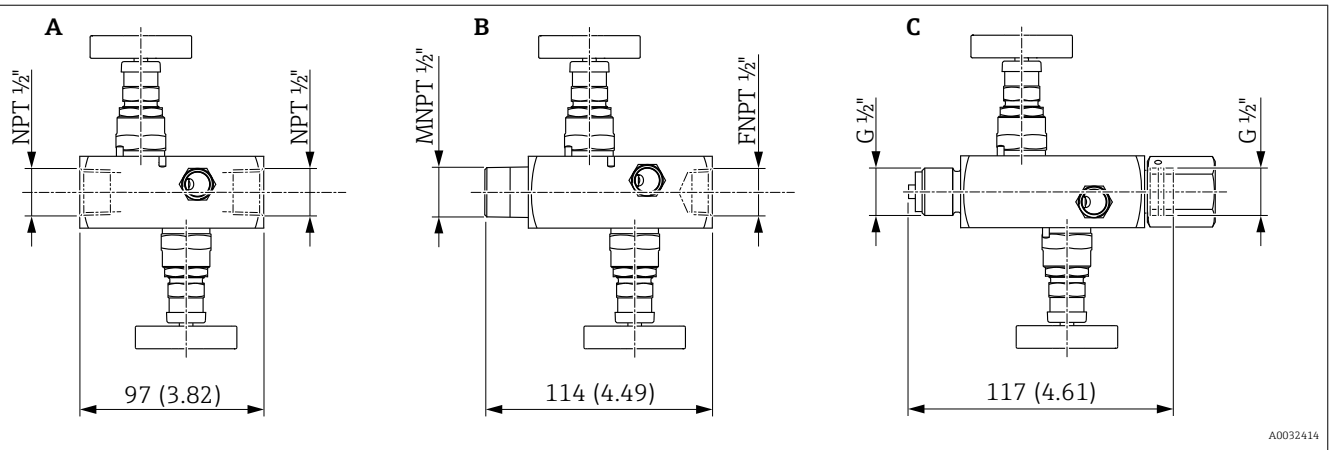

A 2-way valve manifold FNPT x FNPT
B 2-way valve manifold MNPT x FNPT
C 2-way valve manifold G ½" + adjusting nut

Engineering unit mm (in)

2-way valve manifolds in 316L or AlloyC can be ordered
- as **enclosed** accessories (seal for mounting included)
- as a **mounted** accessory (mounted valve manifolds are supplied with a documented leakage test).

Certificates ordered with the equipment (e.g., 3.1 material certificate and NACE) and tests (e.g. PMI and pressure test) apply to the transmitter and the valve manifold.

For other details (order option, dimension, weight, materials), see SD01553P/00/EN "Mechanical accessories for pressure measuring devices".

During the operating life of the valves, it may be necessary to re-tighten the packing.

Mounting on valve manifold

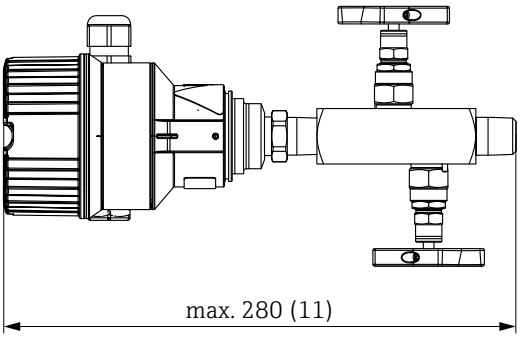

Engineering unit mm (in)

Ordering information:

Product Configurator, "Mounted accessories" ordering feature

PMP51: process connections **Prepared for diaphragm seal mounting**

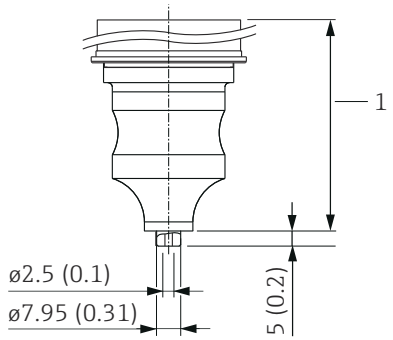

1 Setscrew with hexagonal recess 4 mm (0.16 in), material A2-70
2 Bearing DIN 5401 (1.3505)
3 Hole for filling fluid
4 With F31 aluminum housing: 56 mm (2.2 in), with F15 stainless steel housing: 66 mm (2.6 in)

Engineering unit mm (in)

Material	Designation	Weight kg (lb)	Approval [1]	Option [2]
AISI 316L (1.4404)	Prepared for diaphragm seal mounting	1.9 (4.19)	CRN	XSJ

1) CSA approval: Product Configurator, "Approval" ordering feature
2) Product Configurator, "Process connection" ordering feature

PMP55 basic device - examples

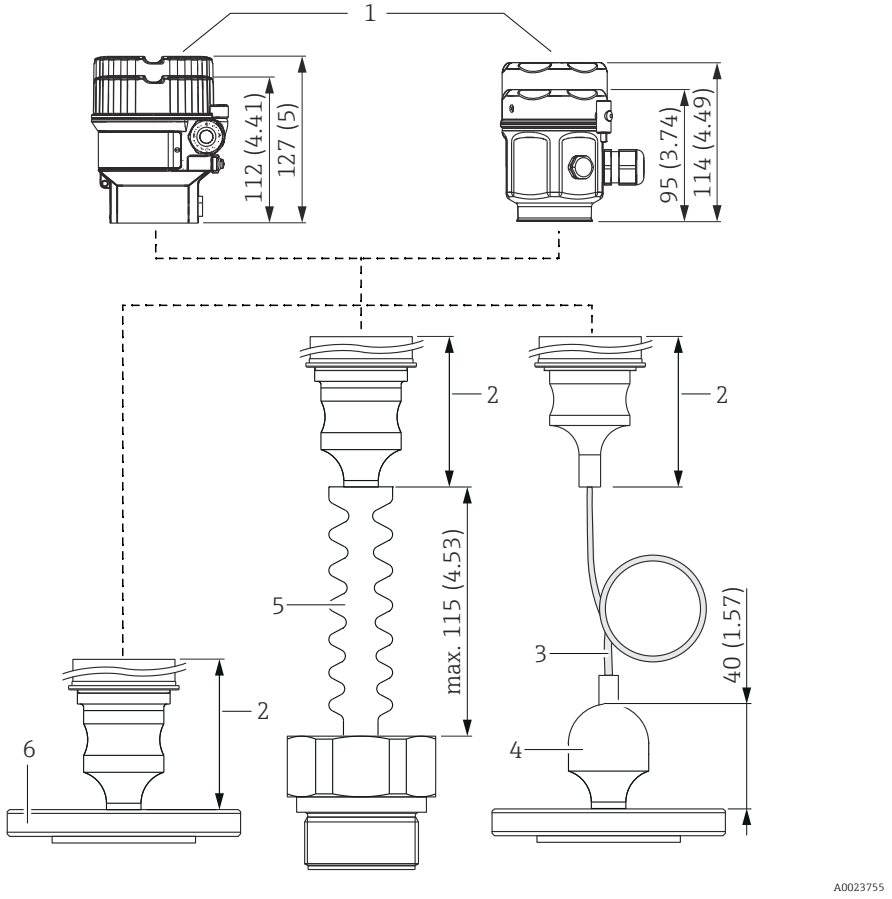

1 PMP55 basic device
2 With F31 aluminum housing: 56 mm (2.2 in), with F15 stainless steel housing: 66 mm (2.6 in)
3 Outer diameter of the capillary - see following table
4 Process connections with capillary lines are 40 mm (1.57 in) higher than process connections without capillary lines
5 Diaphragm seal with temperature isolator
6 Diaphragm seal, here e.g. flange diaphragm seal

Engineering unit mm (in).

Outer diameter of capillary

Designation	Outer diameter
Flexible armor made from 316L	8 mm (0.31 in)
Flexible armor with PVC-coating	10 mm (0.39 in)
Flexible armor with PTFE-coating	12.5 mm (0.49 in)

Diaphragm seal connection

Designation	Option [1)]
Direct	A
Temperature isolator	B
..... m capillary	D
..... ft capillary	E

1) Product Configurator, order code for "Diaphragm seal connection"

Process connections for PMP55 with flush process membrane

- The weights of the diaphragm seals are given in the tables. See → 47 for the weight of the housing
- The following drawings illustrate how the system works in principle. In other words, the dimensions of a diaphragm seal supplied can deviate from the dimensions given in this document.
- Observe the information in the "Planning instructions for diaphragm seal systems" section → 117
- For further information please contact your local Endress+Hauser Sales Center.

Pancake seal with flush process membrane

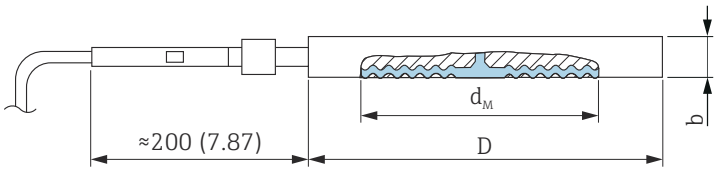

D *Diameter*
d_M *Max. diameter of process membrane*
b *Thickness*

Unit mm (in)

Flange					Diaphragm seal	Option [1]
Material	DN / NPS	NPS / Class [2]	D	b	Weight	
	DN	PN	[mm]	[mm]	[kg (lb)]	
AISI 316L	DN 50	PN 16-400 [3]	102	20 - 22	1.3 (2.87)	UIJ [4]
	DN 80	PN 16-400 [3]	138	20 - 22	2.3 (5.07)	UJJ [4]
	DN 100	PN 16-400 [3]	162	20 - 22	3.1 (6.84)	UKJ
	[in]	[lb/sq.in]	[in]	[in]	[kg (lb)]	
	2	150-2500	3.89	0.79 - 0.87	1.3 (2.87)	ULJ [4]
	3	150-2500	5.00	0.79 - 0.87	2.3 (5.07)	UMJ [4]
	4	150-2500	6.22	0.79 - 0.87	3.1 (6.84)	URJ

1) Product Configurator, order code for "Process connection"
2) The specified nominal pressure applies to the diaphragm seal. The maximum pressure for the measuring instrument is dependent on the lowest-rated element, with regard to pressure, of the selected components → 46.
3) MWP = 250 bar (3 625 psi) in the case of PTFE coating, see "Range of application of the PTFE foil" for details→ 44
4) With TempC process membrane.

Maximum diameter of the process membrane $Ød_M$

DN	PN	$Ød_M$ (mm)					
		316L TempC	316L	Alloy C276	Tantalum	Monel (Alloy 400)	PTFE
50	16-400	61	58	62	60	59	52
80	16-400	89	89	90	92	89	80
100	16-400	-	89	90	92	89	-

NPS	Class	$Ød_M$ (in)					
in		316L TempC	316L	Alloy C276	Tantalum	Monel (Alloy 400)	PTFE
2	150-2500	2.40	2.05	2.32	2.36	2.32	2.05
3	150-2500	3.50	3.50	3.54	3.62	3.50	3.14
4	150-2500	-	3.14	3.50	3.62	3.50	-

Process connections PMP55, flush TempC process membrane

ISO228 and ASME thread, TempC

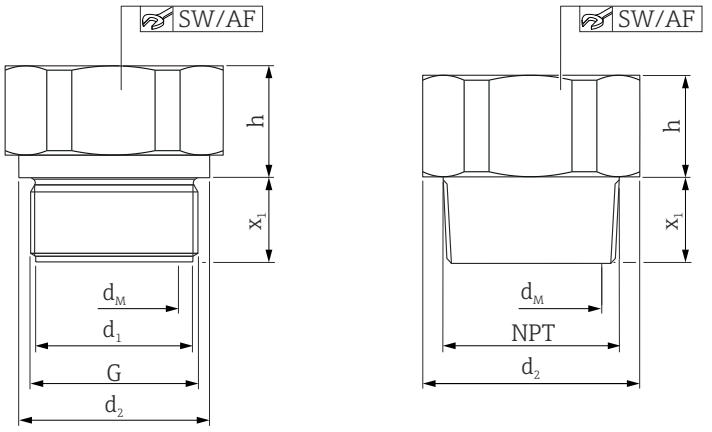

d_1 Diameter
d_2 Diameter
G Thread
x_1 Screw-in length
SW/AF Width across flats
d_M Max. diameter of process membrane
h Height

Unit mm (in). Left: thread ISO228, right: thread ASME
Schematic diagram, the design may differ.

Thread							Diaphragm seal			Option [1]
Material	G	PN	d_1	d_2	x_1	AF	d_M	h	Weight	
			[mm]	[mm]	[mm]		[mm]	[mm]	[kg (lb)]	
AISI 316L	G 1" A	400	30	39	21	41	28	19	0.35 (0.77)	GTJ
Alloy C276									0.38 (0.84)	GTC
AISI 316L	G 1 ½" A	400	–	55	30	46	41	20	0.73 (1.61)	GVJ
Alloy C276									0.79 (1.74)	GVC
AISI 316L	G 2"	400	–	68	30	60	48	20	1.20 (2.65)	GWJ
Alloy C276									1.30 (2.87)	GWC

1) Product Configurator, order code for "Process connection"

Thread							Diaphragm seal			Option [1]
Material	MNPT	PN	d_1	d_2	x_1	AF	d_M	h	Weight	
			[mm]	[mm]	[mm]		[mm]	[mm]	[kg (lb)]	
AISI 316L	1" MNPT	400	–	45	23	41	28	16	0.38 (0.84)	U5J
Alloy C276									0.41 (0.90)	U5C
AISI 316L	1 ½" MNPT	400	–	60	30	46	41	20	0.70 (1.54)	U7J
Alloy C276									0.76 (1.68)	U7C
AISI 316L	2" MNPT	400	–	60	34	46	48	21	1.10 (2.43)	U8J
Alloy C276									1.19 (2.62)	U8C

1) Product Configurator, order code for "Process connection"

PMP55: Process connections with flush process membrane

Tri-Clamp ISO 2852

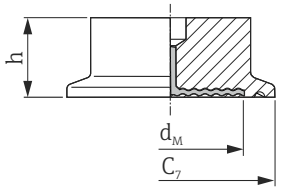

A0021644

C_7 Diameter
h Height
d_M Max. diameter of process membrane

Unit mm (in)

Material [1].	DN ISO 2852	DN DIN 32676	NPS	C_7	d_M			h	Weight	Option [2]
					Standard	TempC	Electropolished			
			[in]	[mm]	[mm]	[mm]	[mm]	[mm]	[kg (lb)]	
AISI 316L	DN 25 / 33.7	DN 25	1	50.5	24	-	-	37	0.32 (0.71)	TCJ
	DN 38	DN 40	1 ½	50.5	36	36	32	30	1 (2.21)	TJJ [3] [4]
	DN 51 / 40	DN 50	2	64	48	41	46	30	1.1 (2.43)	TDJ [3] [4]
	DN 63.5	–	2 ½	77.5	61	61	-	30	0.7 (1.54)	TEJ [5]
	DN 76.1	–	3	91	73	61	-	30	1.2 (2.65)	TFJ [4]

1) Surface roughness of the surfaces in contact with the medium R_a <0.76 µm (29.9 µin) as standard. Lower surface roughness available on request
2) Product Configurator, order code for "Process connection"
3) Diaphragm seal version optionally in compliance with ASME BPE for use in biochemical processes, wetted surfaces R_a <0.38 µm (15 µin)) , electropolished; ordering information: Product Configurator, order code for "Service", option HK
4) Alternatively available with TempC process membrane.
5) With TempC process membrane

Max. PN = 40 bar (580 psi). The maximum PN depends on the clamp used.

PMP55: Process connections with flush process membrane

Tri-Clamp ISO 2852 inline seal

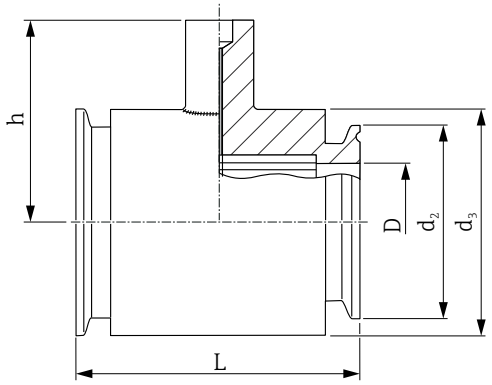

h *Height*
D *Diameter*
d_2 *Diameter*
d_3 *Diameter*
L *Installed length*

Unit mm (in)

Material [1]	DN ISO 2852	NPS	PN	D	d_2	d_3	h	L	Weight	Option [2]
		[in]		[mm]	[mm]	[mm]	[mm]	[mm]	[kg (lb)]	
AISI 316L	DN 10	¾	PN 40	10.5	25	34	41.5	140	0.6 (1.32)	SIJ
	DN 25	1	PN 40	22.5	50.5	54	67	126	1.7 (3.75)	SBJ
	DN 38	1 ½	PN 40	35.5	50.5	69	67	126	1.0 (2.21)	SCJ [3]
	DN 51	2	PN 40	48.6	64	78	79	100	1.7 (3.75)	SDJ [3]

1) Roughness of the surfaces in contact with the medium R_a <0.76 µm (29.9 µin) as standard.
2) Product Configurator, order code for "Process connection"
3) incl. 3.1 and pressure test according to Pressure Equipment Directive, Category II

PMP55: Hygienic process connections with flush process membrane

Varivent for pipes

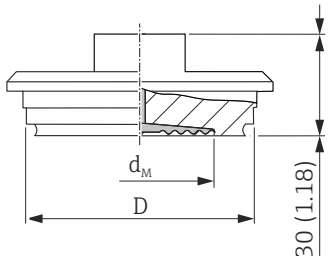

D *Diameter*
d_M *Max. diameter of process membrane*

Unit mm (in)

Material [1]	Designation	PN	D	d_M		Weight	Option [2]
				Standard	TempC		
			[mm]	[mm]	[mm]	[kg (lb)]	
AISI 316L	Type F for DN 25 - DN 32 pipes	PN 40	50	34	36	0.4 (0.88)	TQJ [3]
AISI 316L	Type N for DN 40 - DN 162 pipes	PN 40	68	58	61	0.8 (1.76)	TRJ [4] [3]

1) Roughness of surfaces in contact with the medium R_a <0.76 µm (29.9 µin) as standard.
2) Product Configurator, order code for "Process connection"
3) Alternatively available with TempC process membrane.
4) ASME BPE-compliant diaphragm seal version optionally available for use in biochemical processes, surfaces in contact with the medium R_a <0.38 µm (15 µin)), electropolished; ordering information: Product Configurator, order code for "Service", option HK. In combination with the "Electropolished" option, the wetted parts of the Varivent connection type N are made of 316L (1.4435).

DRD DN50 (65 mm)

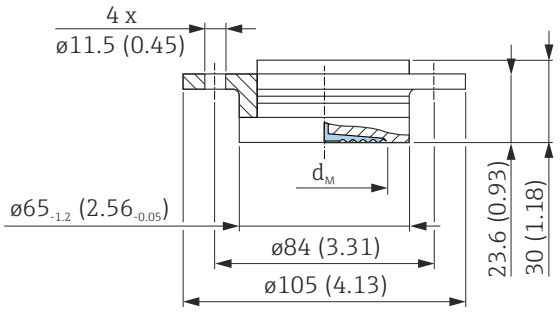

d_M *Max. diameter of process membrane*

Unit mm (in)

Material [1]	PN	d_M		Weight	Option [2]
		Standard	TempC		
		[mm]	[mm]	[kg (lb)]	
AISI 316L	PN 25	50	48	0.75 (1.65)	TQJ [3]

1) Roughness of surfaces in contact with the medium R_a <0.76 µm (29.9 µin) as standard.
2) Product Configurator, order code for "Process connection"
3) Alternatively available with TempC process membrane.

PMP55: Hygienic process connections with flush process membrane

SMS nozzle with coupling nut

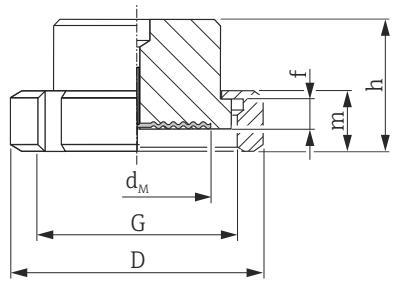

A0021674

D *Diameter*
f *Nozzle height*
G *Thread*
h *Height*
m *Height*
d_M *Max. diameter of process membrane*

Unit mm (in)

Material [1]	NPS	PN	D	f	G	m	h	d_M	Weight	Option [2]
			[mm]	[mm]		[mm]	[mm]	[mm]	[kg (lb)]	
AISI 316L	1	PN 25	54	3.5	Rd 40 – 1/6	20	42.5	24	0.25 (0.55)	T6J
	1 ½	PN 25	74	4	Rd 60 – 1/6	25	57	36	0.65 (1.43)	T7J [3]
	2	PN 25	84	4	Rd 70 – 1/6	26	62	48	1.05 (2.32)	TXJ [3]

1) Roughness of surfaces in contact with the medium R_a <0.76 µm (29.9 µin) as standard.
2) Product Configurator, order code for "Process connection"
3) Alternatively available with TempC process membrane.

Aseptic pipe union, nozzle, DIN 11864-1 Form A; DIN 11866-A pipe

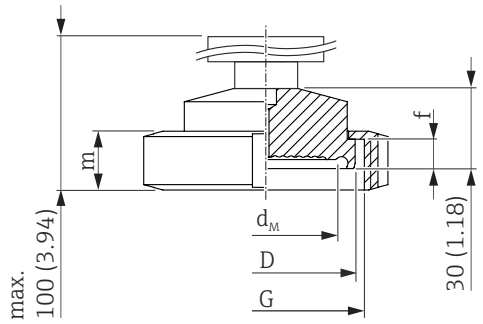

D *Diameter*
f *Nozzle height*
G *Thread*
m *Height*
d_M *Max. diameter of process membrane*

Unit mm (in)

Material [1]	Nozzle				Slotted nut		Diaphragm seal		Option [2]
	DN	PN	D	f	G	m	d_M	Weight	
	[in]	[bar]	[mm]	[mm]			[mm]	[kg (lb)]	
AISI 316L	DN 40	PN 40	55	10	Rd 65 x 1/6"	21	36	0.63 (1.39)	NCJ
	DN 50	PN 25	67	11	Rd 78 x 1/6"	22	48	0.92 (2.03)	NDJ

1) Roughness of surfaces in contact with the medium R_a <0.76 µm (29.9 µin) as standard.
2) Product Configurator, order code for "Process connection"

Aseptic flange connection, DIN 11864-2 Form A; pipe DIN 11866-1

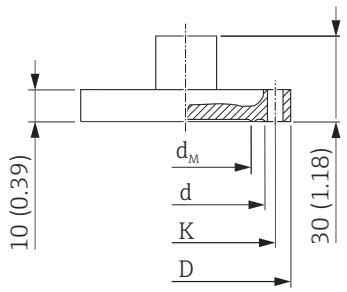

D *Diameter*
k *Pitch diameter*
d *Diameter*
d_M *Max. diameter of process membrane*

Unit mm (in)

Material [1]	Collar flange					Diaphragm seal		Option [2]
	DN	PN	K	d	D	d_M	Weight	
	[in]	[bar]	[mm]	[mm]	[mm]	[mm]	[kg (lb)]	
AISI 316L	DN 32	PN 16	59	47.7	76	25	1.5 (3.31)	NFJ
	DN 40		65	53.7	82	35	1.7 (3.75)	NXJ
	DN 50		77	65.7	94	45	2.2 (4.85)	NZJ

1) Roughness of surfaces in contact with the medium R_a <0.76 µm (29.9 µin) as standard.
2) Product Configurator, order code for "Process connection"

Taper adapter with grooved union nut, DIN 11851

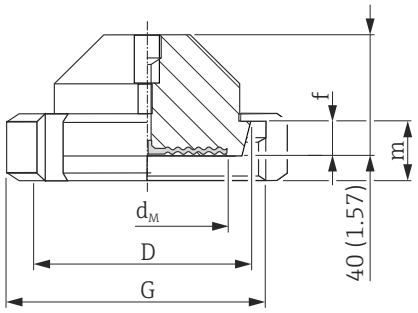

D *Diameter*
f *Nozzle height*
G *Thread*
m *Height*
d_M *Max. diameter of process membrane*

Unit mm (in)

Material [1]	Taper adapter				Slotted nut		Diaphragm seal			Option [2]
	DN	PN	D	f	G	m	d_M		Weight	
		PN					Standard	TempC		
	[in]	[bar]	[mm]	[mm]		[mm]	[mm]	[mm]	[kg (lb)]	
AISI 316L	DN 32	PN 40	50	10	Rd 58 x 1/6"	21	32	28	0.45 (0.99)	MIJ [3]
	DN 40	PN 40	56	10	Rd 65 x 1/6"	21	38	36	0.45 (0.99)	MZJ [3]
	DN 50	PN 25	68.5	11	Rd 78 x 1/6"	19	52	48	1.1 (2.43)	MRJ [3]
	DN 65	PN 25	86	12	Rd 95 x 1/6"	21	66	61	2.0 (4.41)	MSJ [3]
	DN 80	PN 25	100	12	Rd 110 x 1/4"	26	81	61	2.55 (5.62)	MTJ [3]

1) Roughness of surfaces in contact with the medium R_a <0.76 µm (29.9 µin) as standard.
2) Product Configurator, order code for "Process connection"
3) Alternatively available with TempC process membrane.

NEUMO BioControl

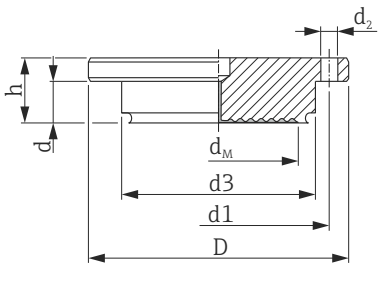

D Diameter
h/d Height
d1/ d3 diameter
d_2 Diameter of hole
d_M Max. diameter of process membrane

Unit mm (in)

Material [1]	NEUMO BioControl Process temperature range: −10 to +200 °C (+14 to +392 °F)								Diaphragm seal			Option [2]
									d_M		Weight	
	DN	PN	D	d	d_2	d_3	d_1	h	Standard	TempC		
		[bar]	[mm]	[mm]	[mm]	[mm]	[mm]	[mm]	[mm]	[mm]	[kg (lb)]	
AISI 316L	DN 50	PN 16	90	17	4 x Ø 9	50	70	27	40	36	1.1 (2.43)	S4J [3]
	DN 80	PN 16	140	25	4 x Ø 11	87.4	115	37	61	61	2.6 (5.73)	S6J [4]

1) Roughness of surfaces in contact with the medium R_a <0.76 µm (29.9 µin) as standard.
2) Product Configurator, order code for "Process connection"
3) Alternatively available with TempC process membrane.
4) With TempC process membrane

Universal process adapter

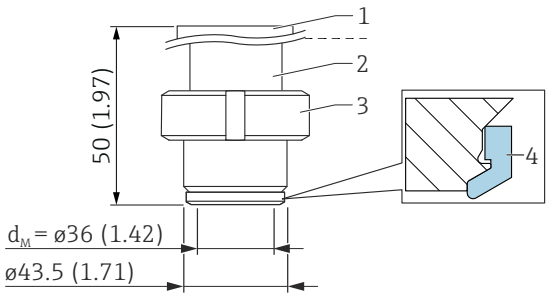

1 Top section: AISI 316L (1.4404)
2 Bottom section: AISI 316L (1.4435)
3 Slotted nut: AISI 304 (1.4301) or AISI 304L (1.4307)
4 Molded seal: Silicone

Unit mm (in)

- The roughness of the surface in contact with the medium R_a < 0.76 µm (30 µin)
- Temperature operating range: −60 to +150 °C (−76 to +302 °F)
- Silicone form seal: FDA 21CFR177.2600/USP Class VI, order number: 52023572

Designation	PN	Weight	Option [1]
	bar (psi)	[kg (lb)]	
Universal process adapter Silicone form seal (4)	10	0.8 (1.76)	UPJ [2]

1) Product Configurator, order code for "Process connection"
2) Alternatively available with TempC process membrane.

PMP55: Process connections with flush process membrane

EN flanges, connection dimensions as per EN 1092-1

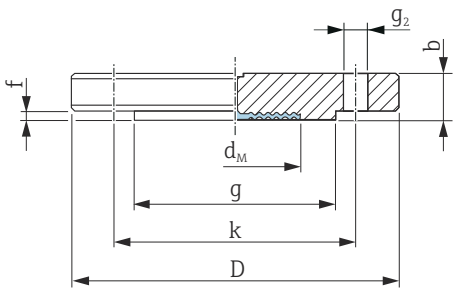

A0021680

D *Diameter of flange*
b *Thickness*
g *Raised face*
f *Raised face*
k *Pitch diameter*
g_2 *Diameter of hole*
d_M *Max. diameter of process membrane*

Unit mm

Flange [1) 2) 3)]							Boltholes			Diaphragm seal	Option [4)]
DN	PN	Form	D	b	g	f	Quantity	g_2	k	Weight	
			[mm]	[mm]	[mm]	[mm]		[mm]	[mm]	[kg (lb)]	
DN 25	10-40	B1	115	18	68	3	4	14	85	2.1 (4.63)	CNJ [5)]
DN 25	63-160	B2	140	24	68	2	4	18	100	2.5 (5.51)	QIJ
DN 25	250	B2	150	28	68	2	4	22	105	3.7 (8.16)	QJJ
DN 25	400	B2	180	38	68	2	4	26	130	7.0 (15.44)	QSJ
DN 32	10-40	B1	140	18	77	2.6	4	18	100	1.9 (4.19)	CPJ
DN 40	10-40	B1	150	18	87	2.6	4	18	110	2.2 (4.85)	CQJ
DN 50	10-40	B1	165	20	102	3	4	18	125	3.0 (6.62)	CXJ [5)]
DN 50	63	B2	180	26	102	3	4	22	135	4.6 (10.14)	PDJ
DN 50	100-160	B2	195	30	102	3	4	26	145	6.2 (13.67)	QOJ
DN 50	250	B2	200	38	102	3	8	26	150	7.7 (16.98)	QMJ
DN 50	400	B2	235	52	102	3	8	30	180	14.7 (32.41)	QVJ
DN 80	10-40	B1	200	24	138	3	8	18	160	5.3 (11.69)	CZJ [5)]
DN 80	100	B2	230	32	138	3	8	24	180	8.9 (19.62)	PPJ
DN 100	100	B2	265	36	175	3	8	30	210	13.7 (30.21)	PQJ

1) Material: AISI 316L
2) The roughness of the surface in contact with the medium, including the raised face of the flanges (all standards) made of Alloy C276, Monel, tantalum or PTFE is R_a <0.8 µm (31.5 µin). Lower surface roughness available on request.
3) The flange raised face is made of the same material as the process membrane.
4) Product Configurator, order code for "Process connection"
5) Alternatively available with TempC process membrane. Diameter of process membrane modified in TempC version: DN 25: 28 mm; DN 50: 61 mm.

Maximum diameter of the process membrane $Ød_M$

DN	PN	$Ød_M$ (mm)					
		316L TempC	316L	Alloy C276	Tantalum	Monel (Alloy 400)	PTFE
DN 25	PN 10-40	28	29.6	33	33	33	28
DN 25	PN 63-160	-	28	28	28	28	-
DN 25	PN 250	-	28	28	28	28	-
DN 25	PN 400	-	28	28	28	28	-
DN 32	PN 10-40	-	34	42	42	34	-
DN 40	PN 10-40	-	38	48	51	42	-
50	PN 10-40	61	58	57	60	59	52
DN 50	PN 63	-	52	62	60	59	-
DN 50	PN 100-160	-	52	62	60	59	-
DN 50	PN 250	-	52	62	60	59	-
DN 50	PN 400	-	52	62	60	59	-
DN 80	PN 10-40	89	89	89	92	89	80
DN 80	PN 100	-	80	90	92	90	-
DN 100	PN 100	-	80	90	92	89	-

EN flanges with barrel, connection dimensions as per EN 1092-1

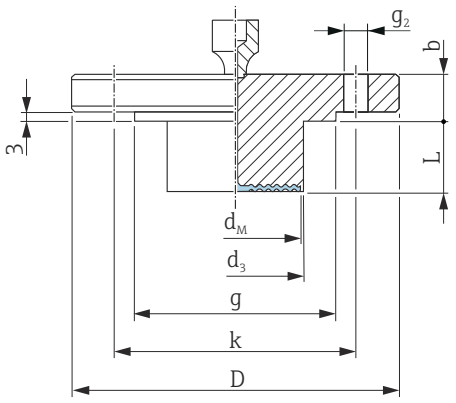

D *Diameter of flange*
b *Thickness*
g *Raised face*
k *Pitch diameter*
g_2 *Diameter of hole*
d_M *Max. diameter of process membrane*
d_3 *Barrel diameter*
L *Barrel length*

Unit mm

Flange [1) 2)]						Boltholes			Diaphragm seal		Option [3)]
DN	PN	Form	D	b	g	Quantity	g_2	k	d_M	Weight	
			[mm]	[mm]	[mm]		[mm]	[mm]	d_M	[kg (lb)]	
DN 50	PN 10-40	B1	165	20	102	4	18	125	47	[4)]	FDJ [4)]
DN 80	PN 10-40	B1	200	24	138	8	18	160	72	[4)]	FEJ [4)]

1) Material: AISI 316L
2) In the case of process membranes made of Alloy C276, Monel or tantalum, the raised face of the flange and the barrel are made of 316L
3) Product Configurator, order code for "Process connection"
4) Available with 50 mm (1.97 in), 100 mm (3.94 in) and 200 mm (7.87 in) barrel, see the following table for barrel diameter and weight

Option [1)]	DN	PN	(L)	d_3	Weight
			[mm]	[mm]	[kg (lb)]
FDJ	DN 50	PN 10-40	50 / 100 / 200	48.3	3.2 (7.1)/ 3.8 (8.4)/ 4.4 (9.7)
FEJ	DN 80	PN 10-40	50 /100 / 200	76	6.2 (13.7)/ 6.7 (14.8)/ 7.8 (17.2)

1) Product Configurator, order code for "Process connection"

PMP55: Process connections with flush process membrane

ASME flanges, as per connection dimensions ASME B 16.5, raised face RF

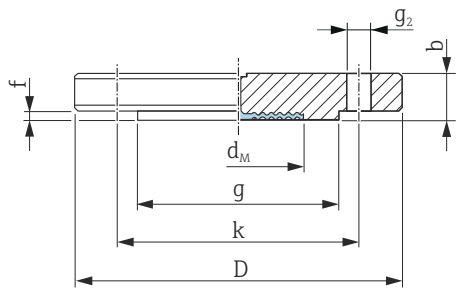

D *Diameter of flange*
b *Thickness*
g *Raised face*
f *Raised face*
k *Pitch diameter*
g_2 *Diameter of hole*
d_M *Max. diameter of process membrane*

Unit in

Flange [1) 2) 3)]						Boltholes			Diaphragm seal	Option [4)]
NPS	Class	D	b	g	f	Quantity	g_2	k	Weight	
[in]	[lb./sq.in]	[in]	[in]	[in]	[in]		[in]	[in]	[kg (lb)]	
1	150	4.25	0.56	2	0.08	4	0.62	3.12	1.2 (2.65)	ACJ [5)]
1	300	4.88	0.69	2	0.08	4	0.75	3.5	1.3 (2.87)	ANJ [5)]
1	400/600	4.88	0.69	2	0.25	4	0.75	3.5	1.4 (3.09)	A0J
1	900/1500	5.88	1.12	2	0.25	4	1	4	3.2 (7.06)	A2J
1	2500	6.25	1.38	2	0.25	4	1	4.25	4.6 (10.14)	A4J
1 ½	150	5	0.69	2.88	0.06	4	0.62	3.88	1.5 (3.31)	AEJ
1 ½	300	6.12	0.81	2.88	0.06	4	0.88	4.5	2.6 (5.73)	AQJ
2	150	6	0.75	3.62	0.06	4	0.75	4.75	2.2 (4.85)	AFJ [5)]
2	300	6.5	0.88	3.62	0.06	8	0.75	5	3.4 (7.5)	ARJ [5)]
2	400/600	6.5	1	3.62	0.25	8	0.75	5	4.3 (9.48)	A1J
2	900/1500	8.5	1.5	3.62	0.25	8	1	6.5	10.3 (22.71)	A3J
2	2500	9.25	2	3.62	0.25	8	1.12	6.75	15.8 (34.84)	A5J
3	150	7.5	0.94	5	0.06	4	0.75	6	5.1 (11.25)	AGJ [5)]
3	300	8.25	1.12	5	0.06	8	0.75	6	7.0 (15.44)	ASJ [5)]
4	150	9	0.94	6.19	0.06	8	0.75	7.5	7.2 (15.88)	AHJ
4	300	10	1.25	6.19	0.06	8	0.88	7.88	11.7 (25.8)	ATJ

1) Material AISI 316/316L: Combination of AISI 316 for required pressure resistance and AISI 316L for required chemical resistance (dual rated)
2) The roughness of the surface in contact with the medium including the raised face of the flanges (all standards) made of Alloy C276, Monel, tantalum or PTFE is R_a <0.8 µm (31.5 µin). Lower surface roughness available on request.
3) The flange raised face is made of the same material as the process membrane.
4) Product Configurator, order code for "Process connection"
5) Alternatively available with TempC process membrane. Diameter of process membrane is modified in TempC version: nominal diameter 1": 1.1 in; 2": 2.40 in.

Maximum diameter of the process membrane $Ød_M$

NPS	Class	$Ød_M$ (in)				
		316L TempC	316L	Alloy C276	Tantalum	Monel (Alloy 400)
1	150	1.10	-	1.30	1.34	1.30
1	300	1.10	-	1.30	1.34	1.30
1	400/600	-	1.10	1.30	1.34	1.30
1	900/1500	-	1.10	1.10	1.02	1.10
1	2500	-	1.10	1.30	1.34	1.30
1 ½	150	-	1.50	1.89	2.01	1.89
1 ½	300	-	1.50	1.89	2.01	1.89
2	150	2.40	-	2.44	2.44	2.44
2	300	2.40	-	2.44	2.44	2.44
2	400/600	-	2.05	2.44	2.44	2.44
2	900/1500	-	2.05	2.44	2.44	2.44
2	2500	-	2.05	2.44	2.44	2.44
3	150	3.50	-	3.62	3.62	3.62
3	300	3.50	-	3.62	3.62	3.62
4	150	-	3.15	3.62	3.62	3.62
4	300	-	3.15	3.62	3.62	3.62

ASME flanges with barrel, connection dimensions as per ASME B 16.5, raised face RF

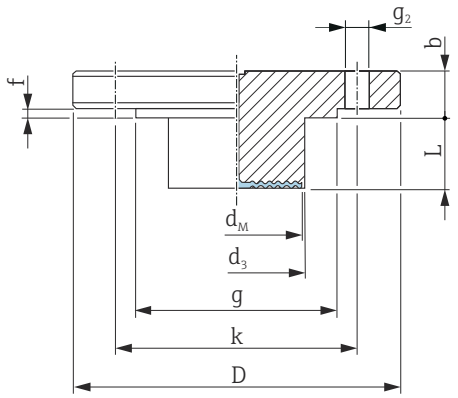

D *Diameter of flange*
b *Thickness*
g *Raised face*
k *Pitch diameter*
g_2 *Diameter of hole*
d_M *Max. diameter of process membrane*
d_3 *Barrel diameter*
L *Barrel length*

Unit in

Flange [1) 2)]						Boltholes			Diaphragm seal		Option [3)]
NPS	Class	D	b	g	f	Quantity	g_2	k	d_M	Weight	
[in]	[lb./sq.in]	[in]	[in]	[in]	[in]		[in]	[in]	[in]	[kg (lb)]	
2	150	6	0.75	3.62	0.06	4	0.75	4.75	1.85	[4)]	FMJ [4)]
3	150	7.5	0.94	5	0.06	4	0.75	6	2.83	[4)]	FNJ [4)]
3	300	8.25	1.12	5	0.06	8	0.88	6.62	2.83	[4)]	FWJ [4)]
4	150	9	0.94	6.19	0.06	8	0.75	7.5	3.5	[4)]	FOJ [4)]
4	300	10	1.25	6.19	0.06	8	0.88	7.88	3.5	[4)]	FXJ [4)]

1) Material: AISI 316/316L. Combination of AISI 316 for required pressure resistance and AISI 316L for required chemical resistance (dual rated)
2) In the case of process membranes made of Alloy C276, Monel or tantalum, the raised face of the flange and the barrel are made of 316L.
3) Product Configurator, order code for "Process connection"
4) Available with 2", 4", 6" and 8"" barrel, see the following table for barrel diameter and weight

Option [1)]	NPS	Class	(L)	d_3	Weight
	[in]	[lb./sq.in]	in (mm)	in (mm)	[kg (lb)]
FMJ	2	150	2 (50.8) / 4 (101.6) / 6 (152.4) / 8 (203.2)	1.9 (48.3)	3.0 (6.6)/ 3.4 (7.5)/ 3.9 (8.6)/ 4.4 (9.7)
FNJ	3	150	2 (50.8) / 4 (101.6) / 6 (152.4) / 8 (203.2)	2.99 (76)	6.0 (13.2) / 6.6 (14.5) / 7.1 (15.7) / 7.8 (17.2)
FWJ	3	300	2 (50.8) / 4 (101.6) / 6 (152.4) / 8 (203.2)	2.99 (76)	7.9 (17.4) / 8.5 (18.7) / 9.0 (19.9) / 9.6 (21.2)
FOJ	4	150	2 (50.8) / 4 (101.6) / 6 (152.4) / 8 (203.2)	3.7 (94)	8.6 (19) / 9.9 (21.8) / 11.2 (24.7) / 12.4 (27.3)
FXJ	4	300	2 (50.8) / 4 (101.6) / 6 (152.4) / 8 (203.2)	3.7 (94)	13.1 (28.9)/ 14.4 (31.6)/ 15.7 (34.6)/ 16.9 (37.3)

1) Product Configurator, order code for "Process connection"

JIS flanges, connection dimensions as per JIS B 2220 BL, raised face RF

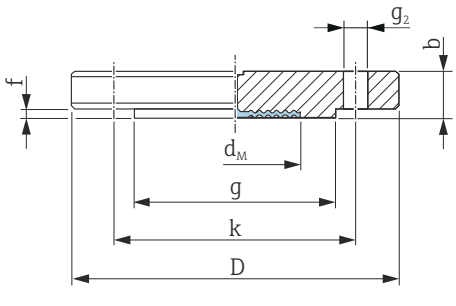

D *Diameter of flange*
b *Thickness*
g *Raised face*
f *Thickness of raised face*
k *Pitch diameter*
g_2 *Diameter of hole*
d_M *Max. diameter of process membrane*

Unit mm

Flange [1) 2) 3)]						Boltholes			Diaphragm seal	Option [4)]
A	K	D	b	g	f	Quantity	g_2	k	Weight	
		[mm]	[mm]	[mm]	[mm]		[mm]	[mm]	[kg (lb)]	
25 A	10 K	125	14	67	1	4	19	90	1.5 (3.31)	KCJ
40 A	10 K	140	16	81	2	4	19	105	2.0 (4.41)	KEJ
50 A	10 K	155	16	96	2	4	19	120	2.3 (5.07)	KFJ
80 A	10 K	185	18	127	2	8	19	150	3.3 (7.28)	KGJ
100 A	10 K	210	18	151	2	8	19	175	4.4 (9.7)	KHJ

1) Material: AISI 316L
2) The roughness of the surface in contact with the medium, including the raised face of the flanges (all standards) made of Alloy C276, Monel, tantalum or PTFE is R_a <0.8 µm (31.5 µin). Lower surface roughness available on request.
3) The flange raised face is made of the same material as the process membrane.
4) Product Configurator, order code for "Process connection"

Maximum diameter of the process membrane Ød_M

A [1)]	K [2)]	Ød_M (mm)					
		316L TempC	316L	Alloy C276	Tantalum	Monel (Alloy 400)	PTFE
25	10	-	28	-	-	-	-
40	10	-	38	-	-	-	-
50	10	-	52	62	60	59	-
80	10	-	80	-	-	-	-
100	10	-	80	-	-	-	-

1) Alphanumeric designation of the flange size.
2) Alphanumeric pressure rating of a component.

PMP55 process connections **Welded separators, TempC**

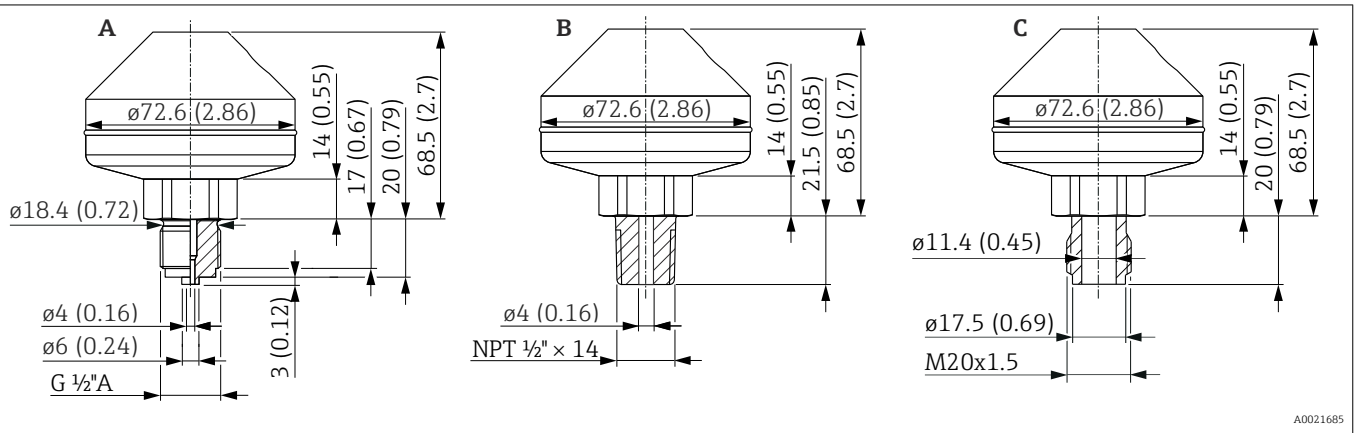

Unit mm (in)

Item	Designation	Material	Measuring range	PN	Weight	Option [1]
			[bar (psi)]		[kg (lb)]	
A	Welded, ISO 228 G ½ A EN 837	AISI 316L	≤ 160 (2320)	PN 160	1.43 (3.15)	UBJ
B	Welded, ANSI ½ MNPT					UCJ
C	Welded, DIN 13 M20x1.5 thread					UFJ

1) Product Configurator, order code for "Process connection"

Threaded separators, PN100, TempC

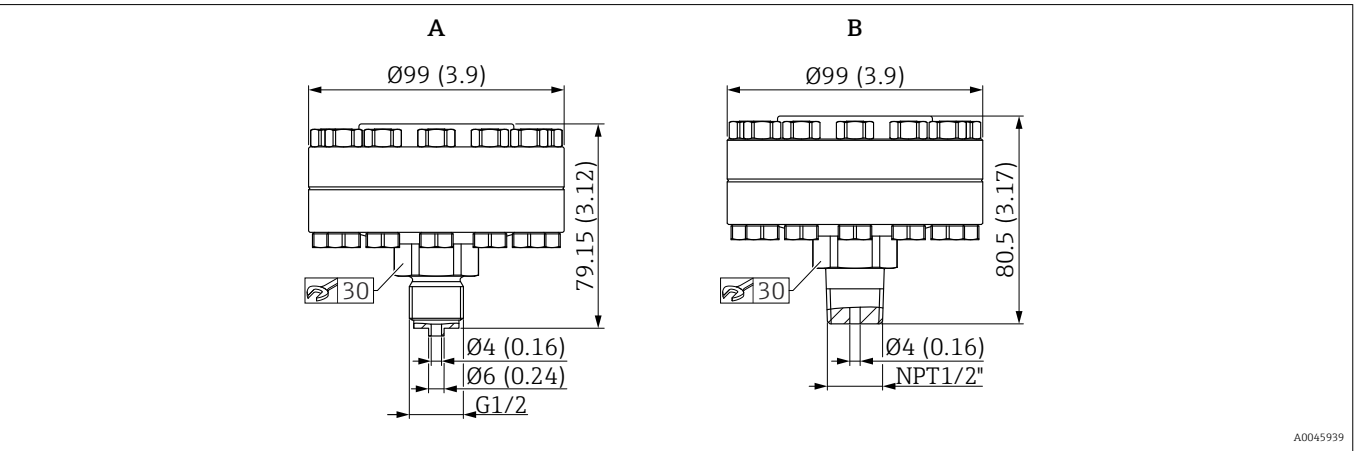

Unit mm (in)

Item	Designation	Material	Measuring range	PN	Weight	Option [1]
			bar (psi)		kg (lb)	
A	Threaded, ISO 228 G½ EN 837 with metal seal (silver-plated) −60 to +400 °C (−76 to +752 °F)	AISI 316L, screws made of A4	≤ 40 (580)	PN 40	2.35 kg (5.18 lb)	UDJ
B	Threaded, ASME MNPT ½ with metal seal (silver-plated) −60 to +400 °C (−76 to +752 °F)				2.35 kg (5.18 lb)	UEJ

1) Product Configurator, order code for "Process connection"

Threaded separators, PN250

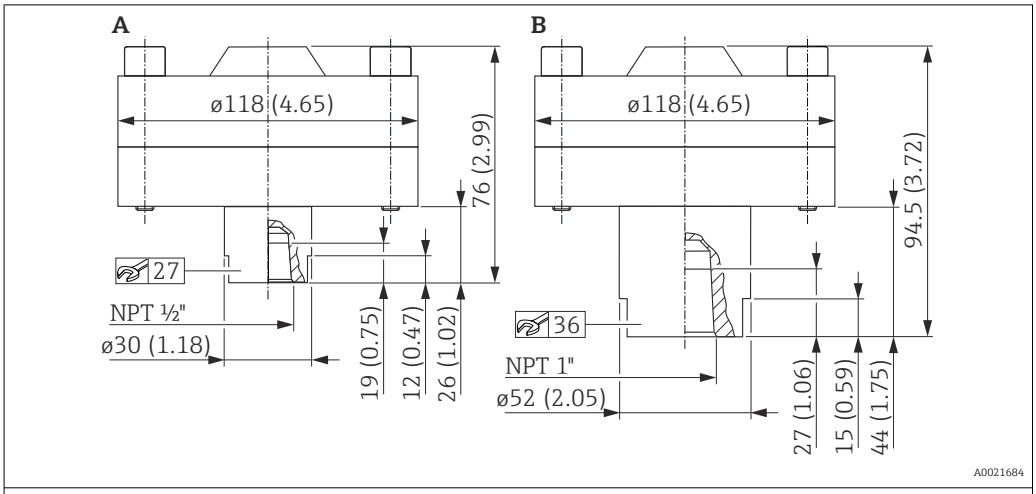

Unit mm (in)

Item	Designation	Material	Measuring range	PN	Weight	Option [1]
			[bar (psi)]		[kg (lb)]	
A	Threaded, ½" NPT with FKM seal −20 to +200 °C (−4 to +392 °F)	AISI 316L Screws made of A4	≤ 250 (3625)	PN 250	4.75 (10.47)	UGJ
B	Threaded, 1" NPT with FKM seal −20 to +200 °C (−4 to +392 °F)				5.0 (11.03)	UHJ

1) Product Configurator, order code for "Process connection"

Threaded separators, PN400

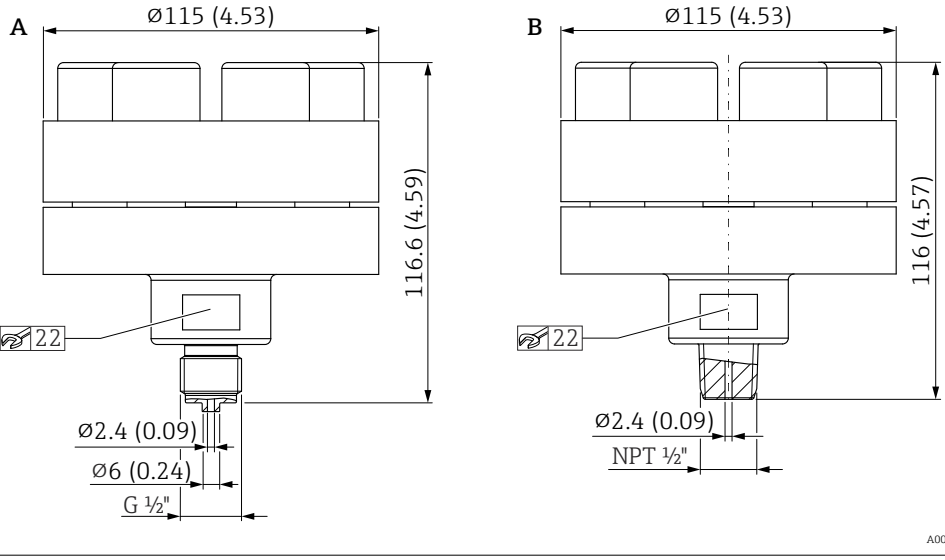

Unit mm (in)

Item	Designation	Material	Measuring range [bar (psi)]	PN [1]	Weight [kg (lb)]	Option [2]
A	Threaded, ISO 228 G ½ A EN 837, with integrated seal lip −60 to +400 °C (−76 to +752 °F)	AISI 316L, screws made of A4	> 40 (580)	PN 400	4.75 (10.47)	UDJ
B	Threaded, ANSI ½ MNPT, with integrated seal lip −60 to +400 °C (−76 to +752 °F)					UEJ

1) This separator is assembled prior to delivery and must not be disassembled!
2) Product Configurator, order code for "Process connection"

Wall and pipe mounting with mounting bracket

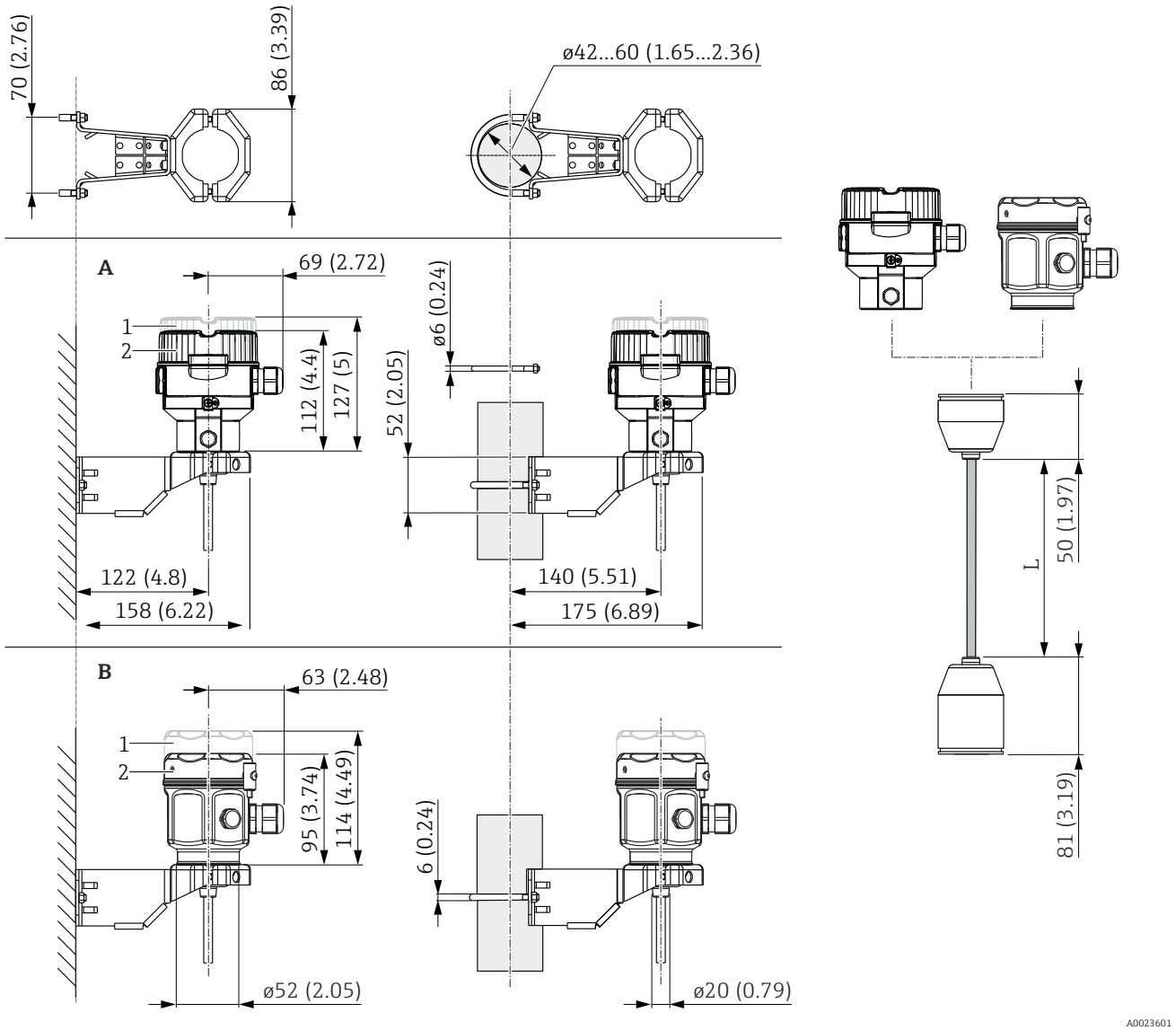

1 Housing cover with viewing window
2 Housing cover without viewing window
L PE: 2 m (6.6 ft), 5 m (16 ft) and 10 m (33 ft), FEP: 5 m (16 ft).

Engineering unit mm (in)

Item	Designation	Weight (kg (lb))		Option [1]
		Housing (F31 or F15)	Mounting bracket	
A	Dimensions with F31 housing	→ 47	0.5 (1.10)	U
B	Dimensions with F15 housing			

1) Product Configurator, "Separate housing" ordering feature

Also available for order as a separate accessory: Part number 71102216

Reduction in installation height

If the separate housing is used, the mounting height of the process connection is reduced compared to the dimensions of the standard version.

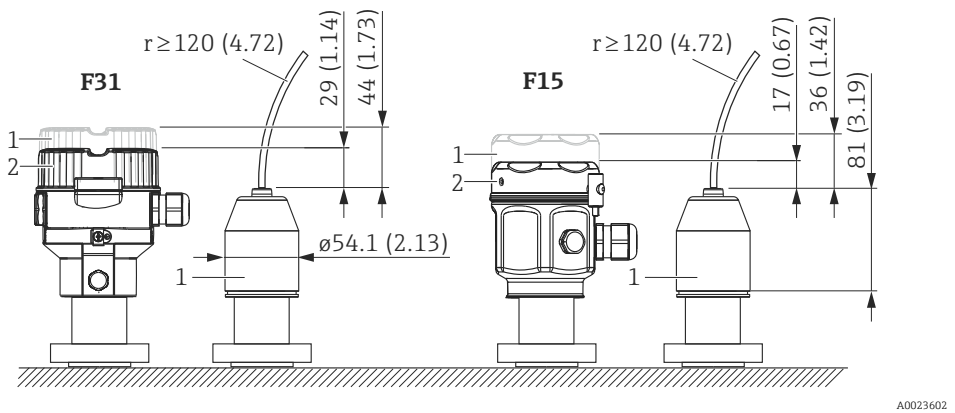

1 Process connection adapter

Engineering unit mm (in)

Weight

Component	Weight
Housing	See "Housing" section
Process connection	See "Process connections" section
Temperature isolator	0.355 kg (0.78 lb)
Capillary with armoring made of AISI 316L (1.4404)	0.16 kg/m (0.35 lb/m) + 0.35 kg (0.77 lb) (weight per capillary tube)
Capillary with armoring made of AISI 316L (PVC)	0.21 kg/m (0.46 lb/m) + 0.35 kg (0.77 lb) (weight per capillary tube)
Capillary with armoring made of AISI 316L (PTFE)	0.29 kg/m (0.64 lb/m) + 0.35 kg (0.77 lb) (weight per capillary tube)

Flushing rings

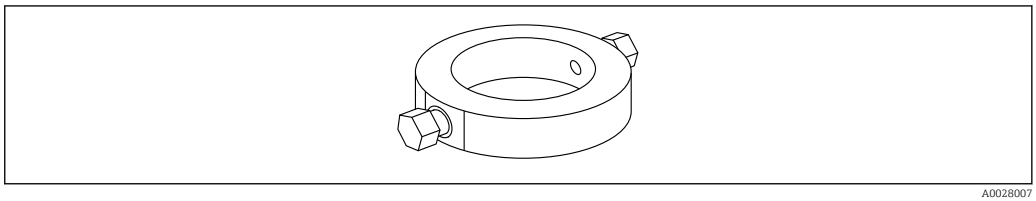

A0028007

Use flushing rings if there is a risk of medium buildup or clogging at the process connection. The flushing ring is fitted between the process connection and the process connection provided by the customer. Using the two lateral flushing holes, medium buildup or clogging in front of the process membrane can be rinsed away and the pressure chamber vented. Various nominal widths and forms allow adaption to the respective process flange.

For other details (dimension, weight, materials), see SD01553P "Mechanical accessories for pressure measuring instruments".

Ordering information

Cerabar

Flushing rings can be ordered as a separate accessory or as an order option for the device.

Used for:
- PMP55, PMP75
- PMC51B, PMC71B, PMP51B, PMP71B

Select the appropriate option in the order features in the Product Configurator.

Material	Nominal diameter	Approval	Accessory [1] Part number
AISI 316L	EN1092-1		
	DN25 [2]	-	71377379
	DN50 [3]	-	71377380
	DN80 [4]	-	71377383
	ASME B16.5		
	NPS 1" [5]	CRN	71377369
	NPS 2" [6]	CRN	71377370
	NPS 3" [7]	CRN	71377371

1) Inspection certification according to EN10204-3.1 material
2) Product Configurator: PMP55, PMP75 order code "620", option "PO"; PMC51B, PMC71B, PMP51B, PMP71B order code "620", option "RD"
3) Product Configurator: PMP55, PMP75 order code "620", option "PP"; PMC51B, PMC71B, PMP51B, PMP71B order code "620", option "RE"
4) Product Configurator: PMP55, PMP75 order code "620", option "PQ"; PMC51B, PMC71B, PMP51B, PMP71B order code "620", option "RF"
5) Product Configurator: PMP55, PMP75 order code "620", option "PK"; PMC51B, PMC71B, PMP51B, PMP71B order code "620", option "RA"
6) Product Configurator: PMP55, PMP75 order code "620", option "PL"; PMC51B, PMC71B, PMP51B, PMP71B order code "620", option "RB"
7) Product Configurator: PMP55, PMP75 order code "620", option "PM"; PMC51B, PMC71B, PMP51B, PMP71B order code "620", option "RC"

Materials not in contact with process

F31 housing

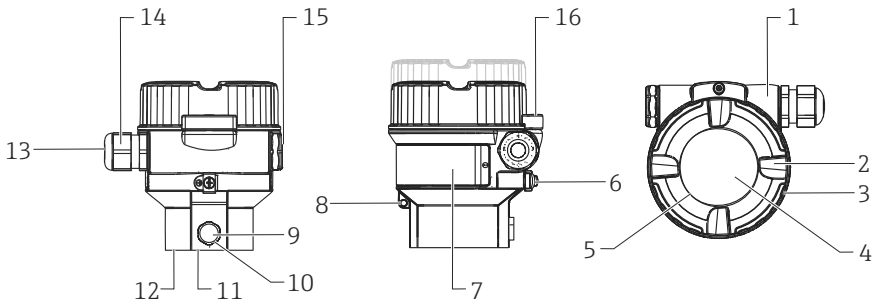

Front view, left-hand side view, top view

Item number	Component	Material
1	F31 housing, RAL 5012 (blue)	Polyester powder coating on aluminum as per EN1706 AC43400 (reduced copper content ≤ 0.1 % to prevent corrosion)
2	Cover, RAL 7035 (gray)	Polyester powder coating on aluminum as per EN1706 AC43400 (reduced copper content ≤ 0.1 % to prevent corrosion)
3	Cover seal	HNBR
4	Sight glass	Mineral glass
5	Sight glass seal	Silicone (VMQ)
6	External ground terminal	AISI 304 (1.4301)
7	Nameplates	Plastic film
8	Fastening for wired-on tag plate	AISI 304 (1.4301)/AISI 316 (1.4401)
9	Pressure compensation filter	AISI 316L (1.4404) and PBT-FR
10	Pressure compensation filter, O-ring	VMQ or EPDM
11	Sealing ring	EPDM
12	Snap ring	PC Plastic
13	Seal of cable gland and plug	EPDM/NBR
14	Cable gland	Polyamide PA, for dust ignition-proof: CuZn nickel-plated
15	Plug	PBT-GF30 FR
		for dust ignition-proof, Ex d, FM XP and CSA XP: AISI 316L (1.4435)
16	Cover clamp	AISI 316L (1.4435) clamp, A4 screw

F15 housing

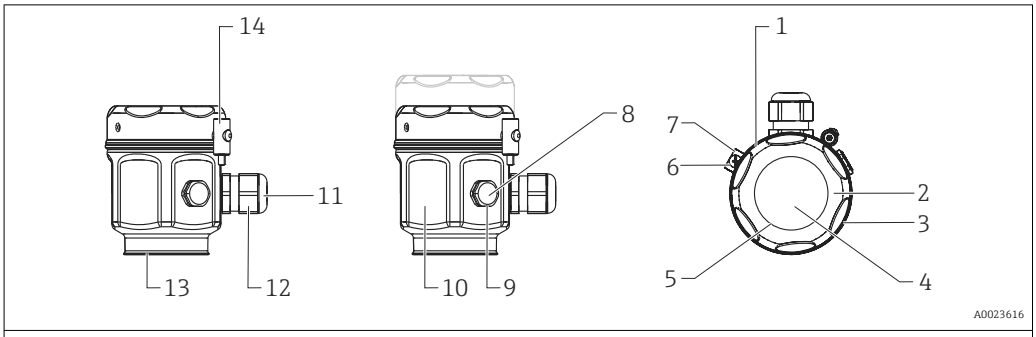

Front view, left-hand side view, top view

Item number	Component	Material
1	F15 housing	AISI 316L (1.4404)
2	Cover	
3	Cover seal	Silicone with PTFE coating
4	Sight glass for non-hazardous area, ATEX Ex ia, NEPSI Zone 0/1 Ex ia, IECEx Zone 0/1 Ex ia, FM NI, FM IS, CSA IS	Polycarbonate (PC)
4	Sight glass for ATEX 1/2 D, ATEX 1/3 D, ATEX 1 GD, ATEX 1/2 GD, ATEX 3 G, FM DIP, CSA dust ignition-proof	Mineral glass
5	Sight glass seal	Silicone (VMQ)
6	External ground terminal	AISI 304 (1.4301)
7	Fastening for wired-on tag plate	AISI 304 (1.4301)/AISI 316 (1.4401)
8	Pressure compensation filter	AISI 316L (1.4404) and PBT-FR
9	Pressure compensation filter, O-ring	VMQ or EPDM
10	Nameplates	Lasered on
11	Cable gland	Polyamide PA, for dust ignition-proof: CuZn nickel-plated
12	Seal of cable gland and plug	NBR/Silicone/EPDM
13	Sealing ring	EPDM
14	Screw	A4-50

Connecting parts

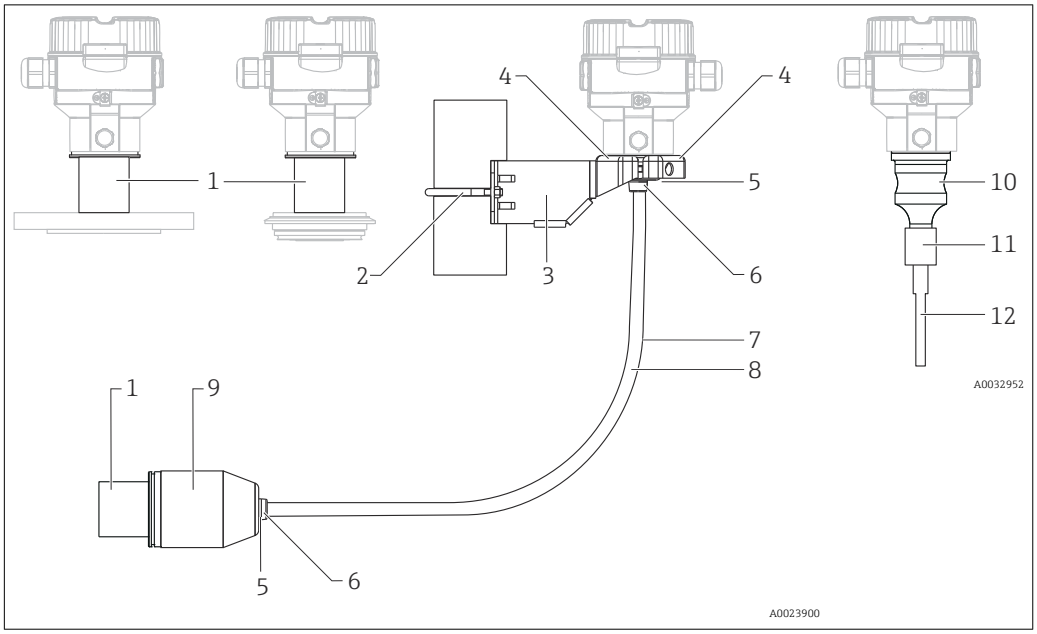

Item number	Component	Material
1	Connection between the housing and process connection	AISI 316L (1.4404)
2	Mounting bracket	Bracket AISI 316L (1.4404)
3		Screw and nuts A4-70
4		Half-shells: AISI 316L (1.4404)
5	Seal for cable from separate housing	FKM, EPDM
6	▪ Gland for cable from separate housing: ▪ Screws:	▪ AISI 316L (1.4404) ▪ A2
7	PE cable for separate housing	Abrasion-resistant cable with Dynema strain-relief members; shielded with aluminum-coated film; insulated with polyethylene (PE-LD), black; copper wires, twisted, UV-resistant
8	FEP cable for separate housing	Abrasion-resistant cable; shielded with galvanized steel wire netting; insulated with fluorinated ethylene propylene (FEP), black; copper wires, twisted, UV-resistant
9	Process connection adapter for separate housing	AISI 316L (1.4404)
10	Cell body	AISI 316L (1.4404)
11	Connection between body of measuring cell and capillary	AISI 316L (1.4404)
12	Heat-shrink tubing (available only if flexible armor for capillary has PVC coating or PTFE hose)	Polyolefin

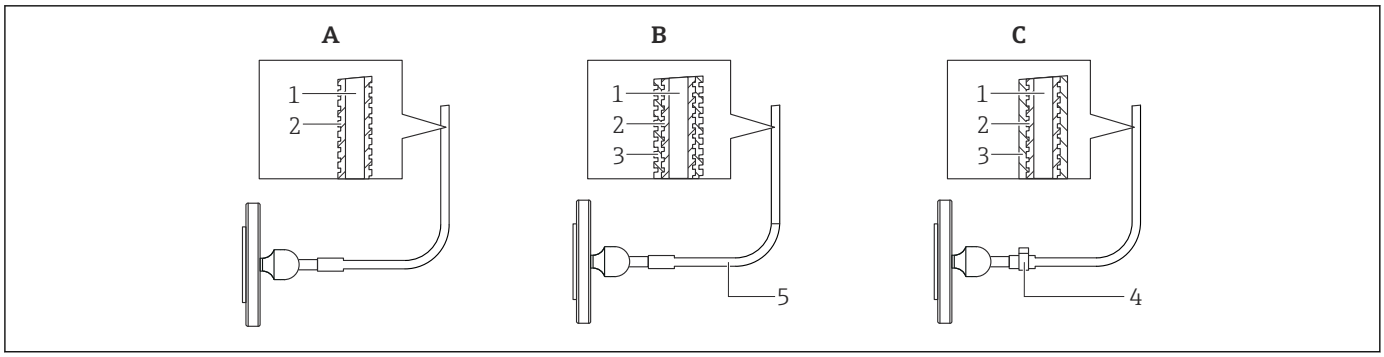

A0028087

Item	Component	A Standard [1] Armor for capillary	B PVC-coated Armor for capillary	C PTFE hose Armor for capillary
1	Capillary	AISI 316 Ti (1.4571)	AISI 316 Ti (1.4571)	AISI 316 Ti (1.4571)
2	Flexible armor for capillary	AISI 316L (1.4404) [2]	AISI 316L (1.4404)	AISI 316L (1.4404)
3	Coating/armor	-	PVC [3]	PTFE [4]
4	Single-ear clamp	-	-	1.4301
5	Shrink tubing at capillary junction	-	Polyolefin	-

1) If no option is specified when ordering, order option "SA" is supplied.
2) Product Configurator, order code for "Armor for capillary:" option "SA"
3) Product Configurator, order code for "Armor for capillary:" option "SB"
4) Product Configurator, order code for "Armor for capillary:" option "SC"

Materials in contact with process

NOTICE

- Device components in contact with the process are listed in the "Mechanical construction" → 47 and "Ordering information" → 126 sections.

Delta-ferrite content

The delta- ferrite content of the wetted parts material can be guaranteed and certified to ≤ 3% if the option "KF" is chosen in the Product Configurator "Material of the process isolating diaphragm" ordering feature. When PMC51 with hygienic process connections is chosen, the deltaferrite content can be guaranteed and certified to ≤ 1% if the option "KF" is chosen in the Product Configurator “Material of the process isolating diaphragm” ordering feature.

TSE Certificate of Suitability (Transmissible Spongiform Encephalopathy)

The following applies to all device components in contact with the process:

- They do not contain any materials derived from animals.
- No additives or operating materials derived from animals are used in production or processing.

Process connections

- "Clamp connections" and "Hygienic process connections" (see also "Ordering information" section): AISI 316L (DIN/EN material number 1.4435)
- Endress+Hauser supplies process connections with threaded connections and EN flanges made of stainless steel as per AISI 316L (DIN/EN material number 1.4404 or 1.4435). With regard to their stability-temperature property, the materials 1.4404 and 1.4435 are grouped together under 13E0 in EN 1092-1: 2001 Tab. 18. The chemical composition of the two materials can be identical.
- Some process connections are also available in Alloy C276 (DIN/EN material number 2.4819). For this purpose see the information in the "Mechanical construction" section.

Process membrane

Device	Designation	Option [1]
PMC51	Al_2O_3 aluminum oxide ceramic (FDA [2] , USP Class VI+121°C), ultrapure 99.9 % (see also www.endress.com/ceraphire)	Standard
PMP51	AISI 316L (DIN/EN material number 1.4435)	A
	AISI 316L with gold-rhodium coating	M
	Alloy C276 (DIN/EN material number 2.4819)	B
PMP55	AISI 316L (DIN/EN material number 1.4435)	A
	AISI 316L, TempC	E
	AISI 316L with gold-rhodium coating	M
	AISI 316L with 0.25 mm (0.01 in) PTFE coating	S
	Alloy C276 (DIN/EN material number 2.4819)	B [3]
	Monel (2.4360)	C [3]
	Tantalum (UNS R05200)	D [3]

1) Product Configurator, order code for "Membrane material"
2) The US Food & Drug Administration (FDA) has no objections to the use of ceramics made from aluminum oxide as a surface material in contact with foodstuffs. This declaration is based on the FDA certificates of our ceramic suppliers.
3) The material of the flange raised face is the same as is used for the process membrane.

Seals

Device	Designation	Option [1]
PMC51	FKM	A
	FKM, FDA, 3A Class I, USP Class VI	B
	FFKM Perlast G75LT	C
	NBR	F
	HNBR, FDA, 3A Class II, KTW, AFNOR, BAM	G
	NBR, low temperature	H
	EPDM, FDA	J
	EPDM, FDA, 3A Class II, USP Class VI+121°C, DVGW, KTW, W270, WRAS, ACS, NSF61	K
	FFKM Kalrez 6375	L
	FFKM Kalrez 7075	M
	FFKM Kalrez 6221, FDA, USP Class VI	N
	Fluoroprene XP40, FDA, USP Class VI+121°C, 3A Class I	P
	VMQ silicone, FDA	S

1) Product Configurator, "Seal" ordering feature

Fill fluid

Designation	Option PMP51 [1]
Silicone oil	1
Inert oil	2
Synthetic oil as per FDA 21 CFR 178.3620 (b)(1) and NSF H-1	3

1) Product Configurator, order code for "Fill fluid"

Designation	Option PMP55 [1]
Silicone oil, suitable for foods FDA 21 CFR 175.105	1
Inert oil	2
Vegetable oil, suitable for foods FDA 21 CFR 172.856	4
High-temperature oil	5
Low-temperature oil	6

1) Only select fill fluids with FDA approval for diaphragm seal devices with 3-A and EHEDG certificates!

Operability

Operating concept

Operator-oriented menu structure for user-specific tasks

- Commissioning
- Operation
- Diagnosis
- Expert level

Quick and safe commissioning

Guided menus for applications

Reliable operation

- Local operation possible in several languages
- Standardized operation at the device and in the operating tools
- Parameters can be locked/unlocked using the device's write protection switch (not IO-Link), using the device software or via remote control

Efficient diagnostic behavior increases measurement availability

- Remedial measures are integrated in plain text
- Diverse simulation options

Local operation

Local display (optional)

A 4-line liquid crystal display (LCD) is used for display and operation. The local display shows measured values, dialog text as well as fault and notice messages in plain text, thereby supporting the user in every stage of operation. The liquid crystal display of the device can be turned in 90° stages. Depending on the installation position of the device, this makes it easy to operate the device and read the measured values.

Functions:

- 8-digit measured value display, including algebraic sign and decimal point, in relation to the set pressure range.
  - Bar graph for 4 to 20 mA HART as current display
  - Bar graph for IO-Link as current display
  - Bar graph for PROFIBUS PA as graphic display of the standardized value of the AI Block
  - Bar graph for FOUNDATION Fieldbus as graphic display of the transducer output
- Simple and complete menu guidance as parameters are split into several levels and groups
- Each parameter is given a 3-digit ID number for easy navigation.
- Option for configuring the display according to individual requirements and preferences, such as language, alternating display, display of other measured values such as measuring cell temperature, contrast setting
- Comprehensive diagnostic functions (fault and warning message, maximum/minimum indicators, etc.)

Overview

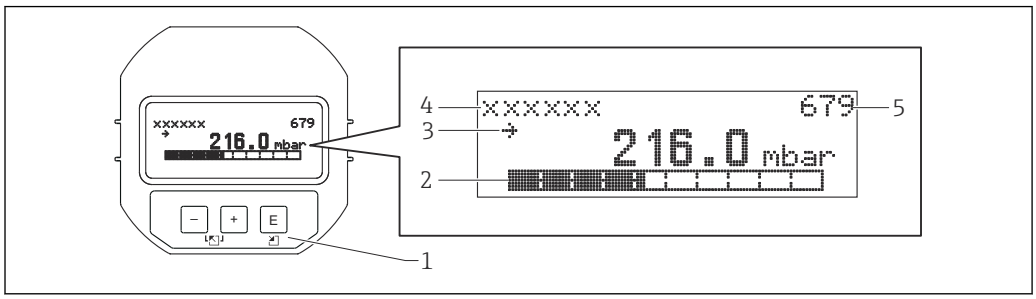

A0016498

1 Operating keys
2 Bar graph
3 Symbol
4 Header
5 Parameter identification number

Ordering information: Product Configurator, order code for "Output, Operation"

Function	Operation via display				
	Analog	HART	IO-Link	PROFIBUS PA	FOUNDATION Fieldbus
Position adjustment (zero point correction)	–	✔	✔	✔	✔
Setting lower range value and upper range value - reference pressure present at the device	–	✔	✔	✔	✔
Device reset	–	✔	✔	✔	✔
Locking and unlocking parameters relevant to the measured value	–	✔	✔	✔	✔
Switching damping on and off	–	✔	✔	✔	✔

Local display (optional) for devices with analog electronics

A 4-line liquid crystal display (LCD) is used. The local display shows measured values, fault messages and notice messages. The liquid crystal display of the device can be turned in 90° stages. Depending on the orientation of the device, this makes it easy to operate the device and read the measured values.

Functions:
- 8-digit measured value display including sign and decimal point, bar graph for 4 to 20 mA as current display.
- Diagnostic functions (fault and warning message etc.)

Overview

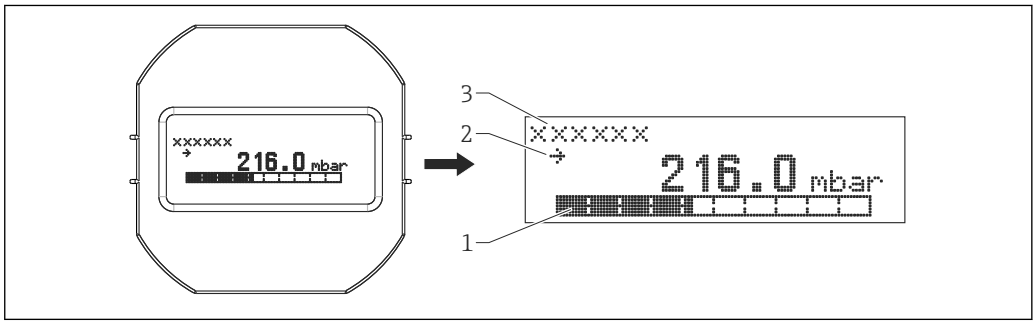

1 Bar graph
2 Symbol
3 Parameter name

Ordering information: Product Configurator, "Display, operation" ordering feature

Operating keys and elements located inside on the electronic insert

Function	Operation with operating keys and elements on the electronic insert				
	Analog	HART	IO-Link	PROFIBUS PA	FOUNDATION Fieldbus
Position adjustment (zero point correction)	✔	✔	✔	✔	✔
Setting lower range value and upper range value - reference pressure present at the device	✔	✔	✔	–	–
Device reset	✔	✔	✔	✔	✔
Locking and unlocking parameters relevant to the measured value	–	✔	–	✔	✔
Value acceptance indicated by the green LED	✔	✔	✔	✔	✔
Switching damping on and off	✔	✔	–	✔	✔

Ordering information:

Product Configurator, "Output, Operation" ordering feature

Analog

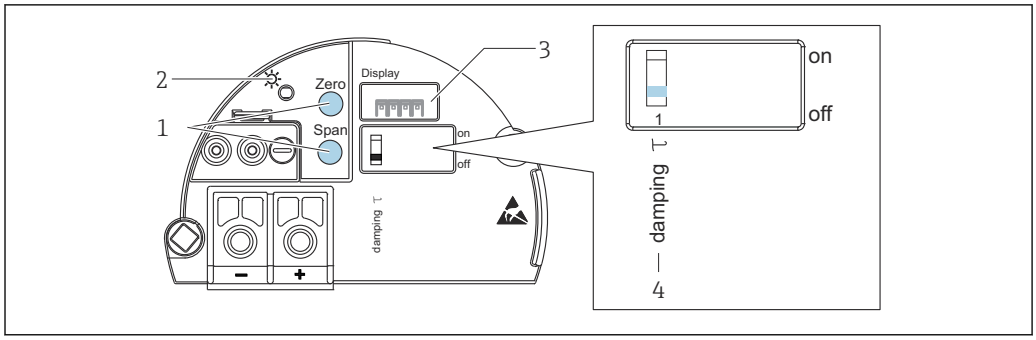

1 Operating keys for lower range value (zero), upper range value (span), position zero adjustment or reset
2 Green LED to indicate successful operation
3 Slot for optional local display
4 DIP switch for switching damping on/off

HART

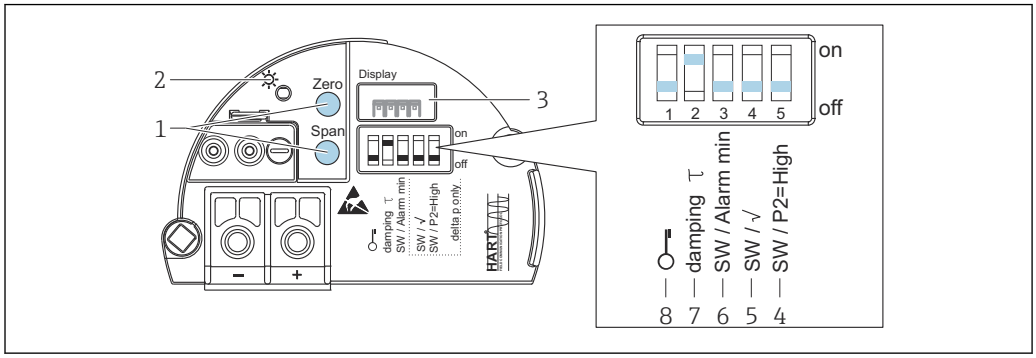

1 Operating keys for lower range value (zero) and upper range value (span)
2 Green LED to indicate successful operation
3 Slot for optional local display
4 DIP switch only for Deltabar M
5 DIP switch only for Deltabar M
6 DIP switch for alarm current SW / Alarm Min (3.6 mA)
7 DIP switch for switching damping on/off
8 DIP switch for locking/unlocking parameters relevant to the measured value

IO-Link

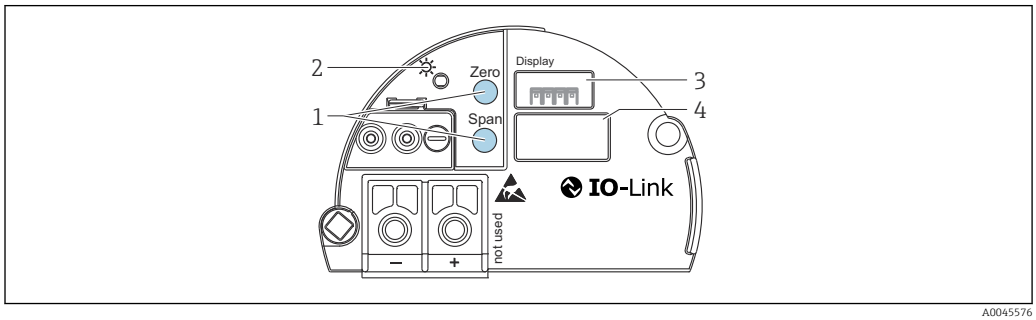

1 Operating keys for lower range value (zero) and upper range value (span)
2 Green LED to indicate successful operation
3 Slot for optional local display
4 Slot for M12 plug

PROFIBUS PA

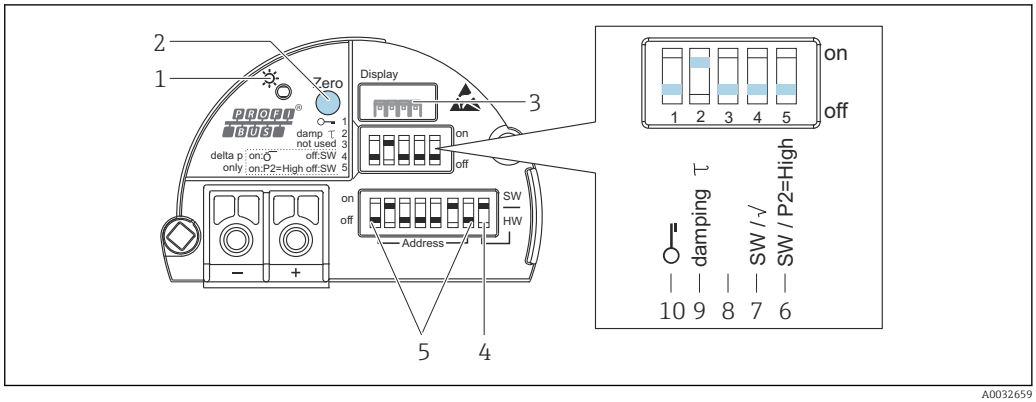

A0032659

1 Green LED to indicate successful operation
2 Operating key for position zero adjustment (Zero) or reset
3 Slot for optional local display
4 DIP-switch for bus address SW / HW
5 DIP-switch for hardware address
6 DIP switch only for Deltabar M
7 DIP switch only for Deltabar M
8 Not used
9 DIP switch for switching damping on/off
10 DIP switch for locking/unlocking parameters relevant to the measured value

FOUNDATION Fieldbus

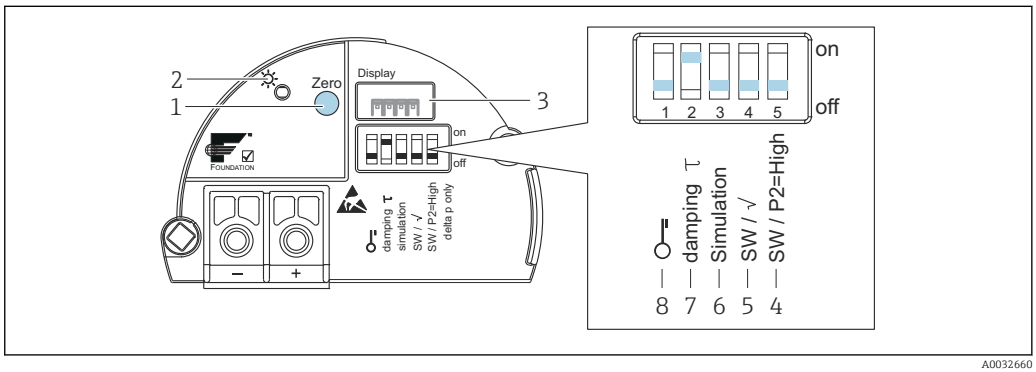

A0032660

1 Operating key for position zero adjustment (Zero) or reset
2 Green LED to indicate successful operation
3 Slot for optional local display
4 DIP switch only for Deltabar M
5 DIP switch only for Deltabar M
6 DIP-switch for simulation mode
7 DIP switch for switching damping on/off
8 DIP switch for locking/unlocking parameters relevant to the measured value

Operating languages

You can also choose another language in addition to the standard language "English":

Designation	Option [1)]
English	AA
German	AB
French	AC
Spanish	AD
Italian	AE
Dutch	AF

Designation	Option [1]
Chinese	AK
Japanese	AL

1) Product Configurator "Additional Operation Language" ordering feature

Remote operation

Depending on the position of the write protection switch on the device, all software parameters are accessible.

Hardware and software for remote operation	HART	IO-Link	PROFIBUS PA	FOUNDATION Fieldbus
FieldCare → 🖹 114	✔ [1]	✔ [2]	✔ [3]	✔
FieldXpert SFX100 → 🖹 114	✔	–	–	✔
NI-FBUS Configurator → 🖹 115	–	–	–	✔
Field Xpert SMT70, SMT77→ 🖹 114	✔ [1]	✔ [2]	–	✔

1) Commubox FXA195 required
2) SFP20 required
3) Profiboard or Proficard required

FieldCare

FieldCare is an Endress+Hauser asset management tool based on FDT technology. With FieldCare, you can configure all Endress+Hauser devices as well as devices from other manufacturers that support the FDT standard.

FieldCare supports the following functions:
- Configuration of transmitters in offline and online mode
- Loading and saving of device data (upload/download)
- Documentation of measuring point

Connection options:
- HART via Commubox FXA195 and the USB port of a computer
- IO-Link with FieldPort SFP20 and the USB port of a computer and IO-Link IODD Interpreter DTM
- PROFIBUS PA via segment coupler and PROFIBUS interface card

For further information, please contact your local Endress+Hauser Sales Center.

Field Xpert SFX100

Field Xpert is an industrial PDA with integrated 3.5" touchscreen from Endress+Hauser based on Windows Mobile. It offers wireless communication via the optional VIATOR Bluetooth modem from Endress+Hauser. Field Xpert also works as a stand-alone device for asset management applications. For details, refer to BA00060S/04/EN.

Field Xpert SMT70, SMT77

The Field Xpert SMT70 tablet PC for device configuration enables mobile plant asset management in hazardous (Ex Zone 2) and non-hazardous areas. It is suitable for commissioning and maintenance staff. It manages Endress+Hauser and third-party field instruments with a digital communication interface and documents the progress of the work. The SMT70 is designed as a complete solution. It comes with a pre-installed driver library and is an easy-to-use, touch-enabled tool for managing field devices throughout their entire life cycle.

The Field Xpert SMT77 for device configuration enables mobile plant asset management in areas categorized as Ex Zone 1. It is suitable for commissioning and maintenance staff for easy management of field instruments with a digital communication interface. The touch-enabled tablet PC is designed as a complete solution. It comes with comprehensive pre-installed driver libraries and offers users a modern software user interface to manage field instruments throughout the entire life cycle.

Required tool for IO-Link: "IO-Link IODD Interpreter DTM" on www.endress.com

FieldPort SFP20

The FieldPort SFP20 is a USB interface for the configuration of Endress+Hauser IO-Link devices, and also of devices from other vendors. Combined with the IO-Link CommDTM and the IODD Interpreter, the FieldPort SFP20 complies with the FDT/DTM standards.

Commubox FXA195

For intrinsically safe HART communication with FieldCare via the USB port. For details refer to TI00404F/00/EN.

Profiboard

For connecting a PC to PROFIBUS.

Proficard

For connecting a laptop to PROFIBUS.

FF configuration program

FF configuration program, such as NI-FBUS Configurator, to
- connect devices with "FOUNDATION Fieldbus signal" into an FF-network
- set FF-specific parameters

Remote operation via NI-FBUS Configurator:

The NI-FBUS Configurator is an easy-to-use graphical environment for creating linkages, loops, and a schedule based on the FOUNDATION Fieldbus concept.

You can use the NI-FBUS Configurator to configure a fieldbus network as follows:
- Set block and device tags
- Set device addresses
- Create and edit function block control strategies (function block applications)
- Configure measuring cell-specific parameters
- Create and edit schedules
- Read and write to control systems and control loops
- Invoke methods specified in the manufacturer-specific DD (e.g. basic device settings)
- Display DD menus (e.g. tab for calibration data)
- Download a configuration
- Verify a configuration and compare it to a saved configuration
- Monitor a downloaded configuration
- Replace a virtual device with a real device
- Save and print a configuration

System integration (except analog electronics)

The device can be given a tag name (max. 8 alphanumeric characters).

Designation	Option [1]
Measuring point (TAG), see additional spec.	Z1
Bus address, see additional spec.	Z2

1) Product Configurator, order code for "Marking"

IO-Link Smart Sensor Profile 2nd Edition

Supports
- Identification
- Diagnosis
- Digital Measuring Sensor (as per SSP 4.3.3)

IO-Link (optional)

Operating concept for devices with IO-Link

- Operator-oriented menu structure for user-specific tasks
- Fast and safe commissioning

Efficient diagnostic behavior increases measurement availability

- Remedial measures
- Simulation options

IO-Link information

IO-Link is a point-to-point connection for communication between the measuring device and an IO-Link master. The measuring device features an IO-Link communication interface type 2 (pin 4) with a second IO function on pin 2. This requires an IO-Link-compatible assembly (IO-Link master) for operation. The IO-Link communication interface enables direct access to the process and diagnostic data. It also provides the option of configuring the measuring device while in operation.

Characteristics of the IO-Link interface:
- IO-Link specification: Version 1.1
- IO-Link Smart Sensor Profile 2nd Edition
- Speed: COM2; 38.4 kBaud
- Minimum cycle time: 10 ms
- Process data width: 14 Byte
- IO-Link data storage: Yes
- Block configuration: Yes
- Device operational: The measuring device is operational 5 seconds after the supply voltage is applied

IO-Link download

http://www.endress.com/download
- Select "Device Driver" from the search options shown
- For "Type", select "IO Device Description (IODD)"
  Select IO-Link (IODD)
  IODD for Cerabar M PMC51, PMP51, PMP55
- Under the product root, select the desired device and follow any further instructions.

https://ioddfinder.io-link.com/
Search by
- Manufacturer
- Article number
- Product type

Device Search (IO-Link)

The Device Search parameter is used to uniquely identify the device during installation.

Planning instructions for diaphragm seal systems

NOTICE

Diaphragm seal systems sized/ordered incorrectly

The performance and permitted area of application of a diaphragm seal system depend on the process membrane used, the fill fluid, the connection, the design and the prevailing process and ambient conditions.

- ▶ To help you select the right diaphragm seal systems for your particular applications, Endress +Hauser provides its customers with the "Applicator Sizing Diaphragm Seal" selection tool, which is available free of charge at "www.endress.com/applicator" or as a download.

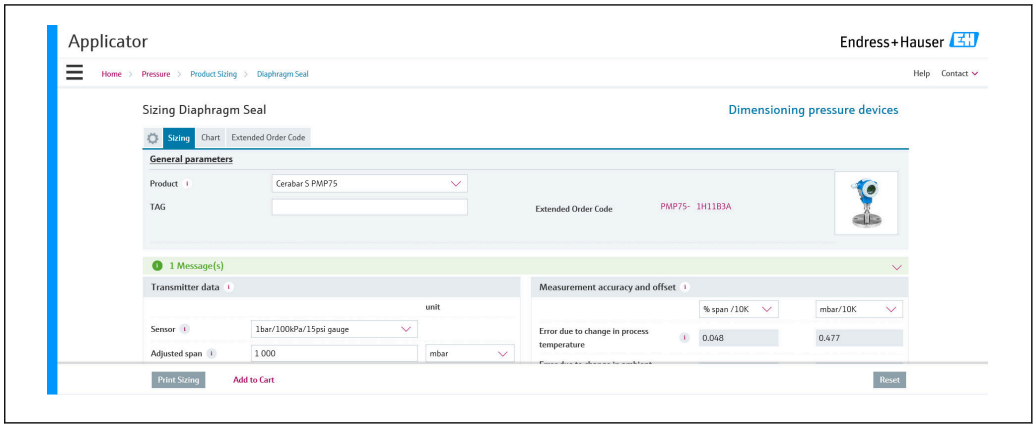

A0034616

For further details, or for information on an optimum diaphragm seal solution, your local Endress+Hauser Sales Center is also always happy to help.

Applications

Diaphragm seal systems should be used if the process and the device need to be separated. Diaphragm seal systems offer clear advantages in the following instances:

- In the case of extreme process temperatures
- For aggressive media
- If extreme measuring point cleaning is necessary, or in the event of very damp mounting locations
- If the measuring point is exposed to severe vibrations
- For mounting locations that are difficult to access

Design and operation mode

Diaphragm seals act as separators between the measuring system and the process.

A diaphragm seal system consists of:
- A diaphragm seal
- A capillary tube or a temperature isolator if necessary
- Fill fluid and
- A pressure transmitter.

The process pressure acts via the process membrane of the diaphragm seal on the liquid-filled system, which transfers the process pressure onto the measuring cell of the pressure transmitter.

Endress+Hauser delivers all diaphragm seal systems as welded versions. The system is hermetically sealed, which ensures the highest reliability.

The diaphragm seal determines the application range of the system by:
- The diameter of the process membrane
- The process membrane stiffness and material
- The design (oil volume)

Diameter of process membrane

The greater the diameter of the process membrane (less stiff), the smaller the temperature effect on the measurement result.

Stiffness of process membrane

The stiffness depends on the diameter of the process membrane, the material, any existing coating, the thickness and shape of the process membrane. The process membrane thickness and the shape are determined by the design. The stiffness of the process membrane of a diaphragm seal influences the temperature application range and the measurement error caused by temperature effects.

The Endress+Hauser TempC process membrane: maximum accuracy and process safety during pressure and differential pressure measurement with diaphragm seals

To measure with even greater accuracy in these applications and increase process safety, Endress +Hauser has developed the TempC process membrane which is based on a completely revolutionary technology. This process membrane guarantees the utmost level of accuracy and process safety in diaphragm seal applications.
- The very low temperature effect minimizes the effect of process temperature and ambient temperature fluctuations, thereby guaranteeing accurate and reliable measurements. Measurement inaccuracies caused by temperature are reduced to a minimum.
- The TempC process membrane can be used at temperatures between −70 °C (−94 °F) and +400 °C (+752 °F). This guarantees maximum process safety even in the event of very long sterilization and cleaning cycles (SIP/CIP) in tanks and pipes at high temperatures.
- Smaller instrumentation dimensions are possible thanks to the TempC process membrane. With a smaller process connection, the new process membrane measures at least as accurately as a conventional membrane with a larger diameter.
- Due to the geometry of the membrane, an overshoot occurs initially immediately following a temperature shock. This results in a transient response, the duration and deviation of which are significantly less compared to traditional membrane types. In the case of batch processes, these shorter recovery times mean a far higher level of availability of the production facilities. The effect of the overshoot on the output signal can be reduced by setting a damping in the case of a TempC process membrane.
- In addition, the TempC process membrane excels in terms of its improved hygienic cleanability and its insensitivity to substantial changes in the pressure load.

Ordering information:

See the Product Configurator for the individual process connection and the choice of process membrane.

Selection in the Applicator:

Under "Transmitter data" in the "Membrane material" field.

Capillary

Capillaries with an internal diameter of 1 mm (0.04 in) are used as standard.

The capillary tube influences the thermal change, the ambient temperature operating range and the response time of a diaphragm seal system as a result of its length and internal diameter.

Fill fluid

When selecting the fill fluid, the medium temperature and ambient temperature, as well as the process pressure, are of crucial importance. Observe the temperatures and pressures during commissioning and cleaning. A further selection criterion is the compatibility of the fill fluid with the requirements of the medium. For example, only fill fluids that do not present a health hazard may be used in the food industry, e.g. vegetable oil or silicone oil (see also the following section "Diaphragm seal fill fluids").

The fill fluid used affects the thermal change, the temperature application range of a diaphragm seal system and the response time. A change in the temperature causes a volume change of the fill fluid. The volume change is dependent on the coefficient of thermal expansion of the fill fluid and on the volume of the fill fluid at calibration temperature (constant in the range: +21 to +33 °C (+70 to +91 °F)).

For example, the fill fluid expands in the event of a temperature increase. The additional volume presses against the process membrane of a diaphragm seal. The stiffer a process membrane is, the greater its return force, which counteracts a volume change and acts on the measuring cell together with the process pressure, thus shifting the zero point.

Pressure transmitter

The pressure transmitter influences the temperature application range, the thermal change and the response time as a result of its volume change. The volume change is the volume that has to be shifted to pass through the complete measuring range.

Pressure transmitters from Endress+Hauser are optimized with regard to minimum volume change.

Diaphragm seal fill fluid

Medium	P_{abs} = 0.05 bar (0.725 psi) [1]	P_{abs} = ≥1 bar (14.5 psi) [2]
Silicone oil	−40 to +180 °C (−40 to +356 °F)	−40 to +250 °C (−40 to +482 °F)
High-temperature oil	−20 to +200 °C (−4 to +392 °F)	−20 to +400 °C (−4 to +752 °F) [3] [4] [5]
Low-temperature oil	−70 to +120 °C (−94 to +248 °F)	−70 to +180 °C (−94 to +356 °F)
Vegetable oil	−10 to +160 °C (+14 to +320 °F)	−10 to +220 °C (+14 to +428 °F)
Inert oil	−40 to +100 °C (−40 to +212 °F)	−40 to +175 °C (−40 to +347 °F) [6] [7]

1) Permitted temperature range at p_{abs} = 0.05 bar (0.725 psi) (observe temperature limits of the device and the system!)
2) Permitted temperature range at p_{abs} ≥1 bar (14.5 psi) (observe temperature limits of the device and the system!)
3) 325 °C (617 °F) at ≥1 bar (14.5 psi) absolute pressure.
4) 350 °C (662 °F) at ≥1 bar (14.5 psi) absolute pressure (max. 200 hours).
5) 400 °C (752 °F) at ≥1 bar (14.5 psi) absolute pressure (max. 10 hours).
6) 150 °C (302 °F) at ≥1 bar (14.5 psi) absolute pressure.
7) 175 °C (347 °F) at ≥1 bar (14.5 psi) absolute pressure (max. 200 hours).

The calculation of the operating temperature range of a diaphragm seal system depends on the fill fluid, capillary length and capillary internal diameter, process temperature and oil volume of the diaphragm seal. Detailed calculations, e.g. for temperature ranges, vacuum pressure and temperature ranges, are done separately in the Applicator "Sizing Diaphragm Seal".

A0038925

Operating temperature range

The operating temperature range of a diaphragm seal system depends on the fill fluid, capillary length and internal diameter, process temperature and oil volume of the diaphragm seal.

The range of application can be extended by using a fill fluid with a smaller expansion coefficient and a shorter capillary.

Information on cleaning

Endress+Hauser provides flushing rings as an accessory to enable cleaning of the process membrane without removing the transmitter from the process.

For further information please contact your local Endress+Hauser Sales Center.

We recommend you perform CIP (cleaning in place (hot water)) before SIP (sterilization in place (steam)) for inline seals. Frequent use of SIP cleaning increases the stress and strain on the process membrane. Under unfavorable conditions, frequent changes of temperature can lead to process membrane material fatigue and potentially leaks over the long term.

Installation instructions

Diaphragm seal systems

- A diaphragm seal together with the transmitter form a closed, calibrated system, which is filled through openings in the diaphragm seal and in the transmitter's measurement system. These openings are sealed and must not be opened.
- In the case of devices with diaphragm seals and capillaries, the zero point shift caused by the hydrostatic pressure of the filling liquid column in the capillaries must be taken into account when selecting the measuring cell. If a measuring cell with a small measuring range is selected, a position adjustment can cause range violation.
- For devices with a temperature isolator or capillary, a suitable fastening device (mounting bracket) is recommended.
- When mounting, sufficient strain relief must be provided for the capillary tube to prevent the capillary from bending (capillary bending radius ≥ 100 mm (3.94 in)

Capillary

In order to obtain more precise measurement results and to avoid a defect in the device, mount the capillaries as follows:
- vibration-free (in order to avoid additional pressure fluctuations)
- not in the vicinity of heating or cooling lines
- insulate if the ambient temperature is below or above the reference temperature
- with a bending radius ≥ 100 mm (3.94 in)

thermal insulation

The PMP55 may only be insulated up to a certain height. The maximum permitted insulation height is indicated on the devices and applies to an insulation material with a heat conductivity ≤ 0.04 W/(m x K) and to the maximum permitted ambient and process temperature. The data were determined under the most critical application "quiescent air". Maximum permitted insulation height, here indicated on a PMP55 with a flange:

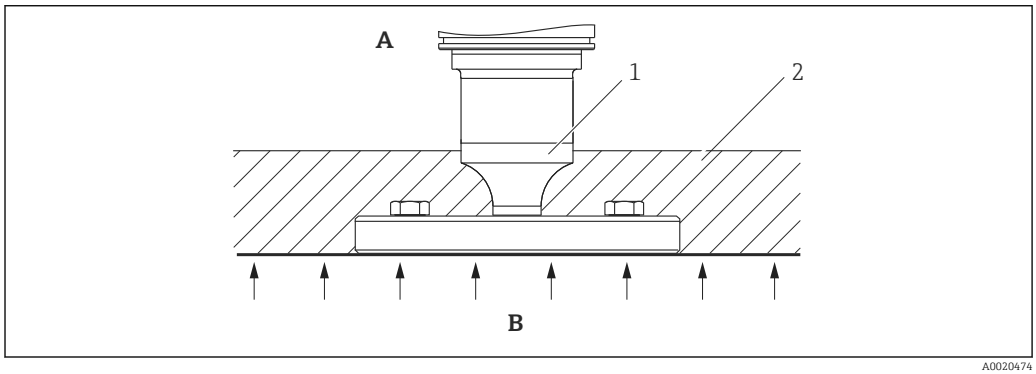

A Ambient temperature ≤ 70 °C (158 °F)
B Process temperature
1 Maximum permitted insulation height
2 Insulation material

Mounting with temperature isolator

Endress+Hauser recommends the use of temperature isolators in the event of constant extreme medium temperatures which cause the maximum permissible electronics temperature of +85 °C (+185 °F) to be exceeded. Depending on the fill fluid used, diaphragm seal systems with temperature isolators can be used for maximum temperatures of up to +400 °C (+752 °F) → 119, , section "Diaphragm seal fill fluids". To minimize the influence of rising heat, Endress+Hauser recommends the device be mounted horizontally or with the housing pointing downwards. The additional installation height causes a zero point shift of maximum 21 mbar (0.315 psi) due to the hydrostatic column in the temperature isolator. You can correct this zero point shift at the device.

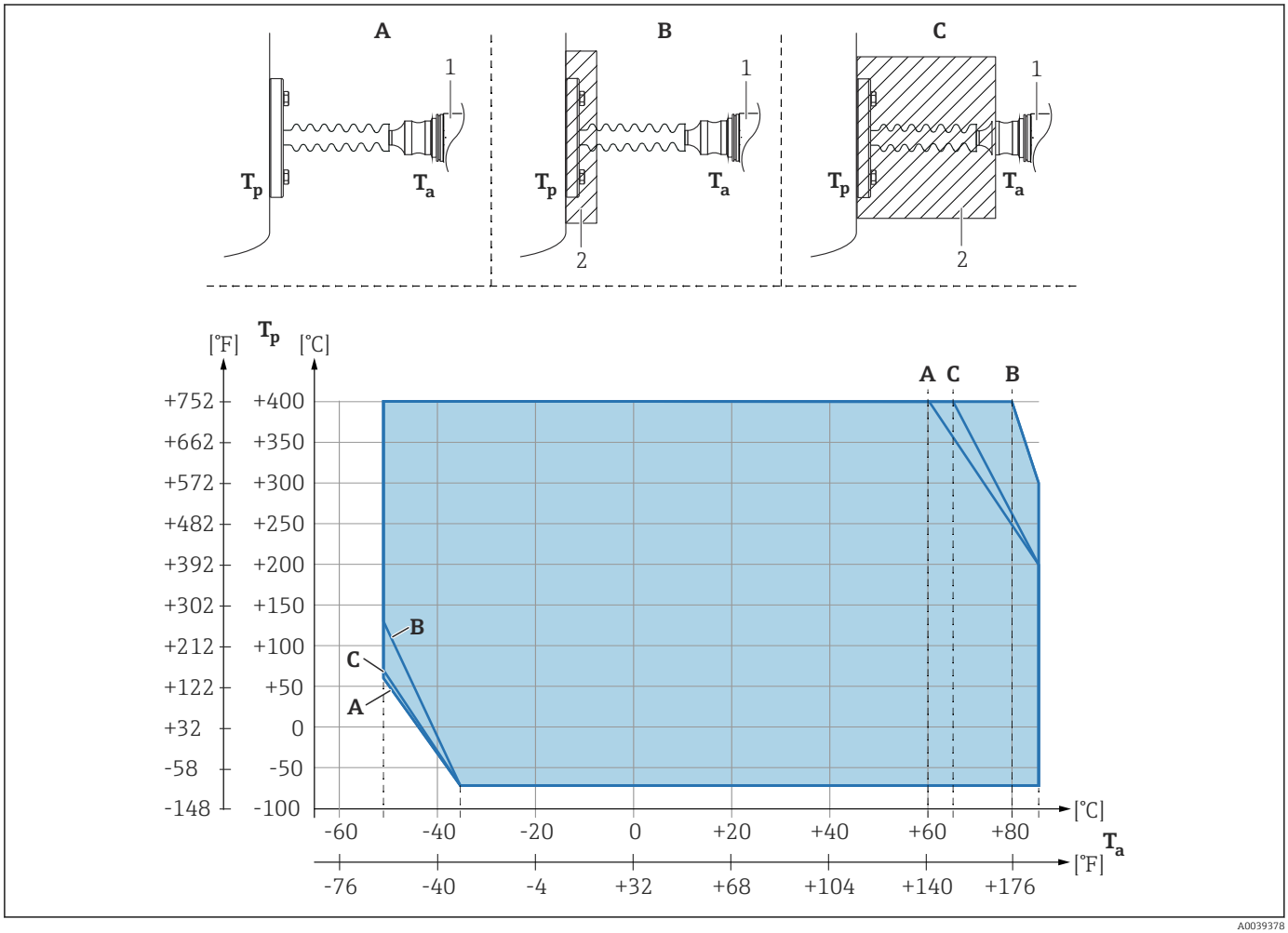

A0039378

A No insulation
B Insulation 30 mm (1.18 in)
C Maximum insulation
1 Transmitter
2 Insulation material

Vacuum applications

Installation instructions

In vacuum applications, ideally use pressure transmitters with a ceramic measuring membrane (oil-free).

For applications under vacuum, Endress+Hauser recommends mounting the pressure transmitter below the diaphragm seal. This prevents vacuum loading of the diaphragm seal caused by the presence of fill fluid in the capillary.

When the pressure transmitter is mounted above the diaphragm seal, the maximum height difference H1 in accordance with the following illustrations must not be exceeded. The following illustration shows installation above the lower diaphragm seal:

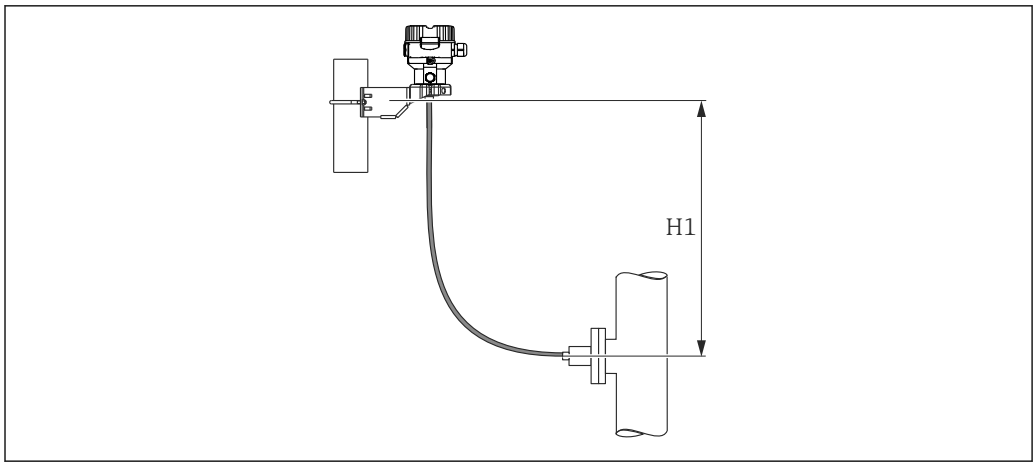

A0023994

The maximum height difference depends on the density of the fill fluid and the lowest pressure that is permitted to occur at the diaphragm seal (empty vessel). See illustration below. The following diagram shows the maximum installation height above the lower diaphragm seal for vacuum applications.

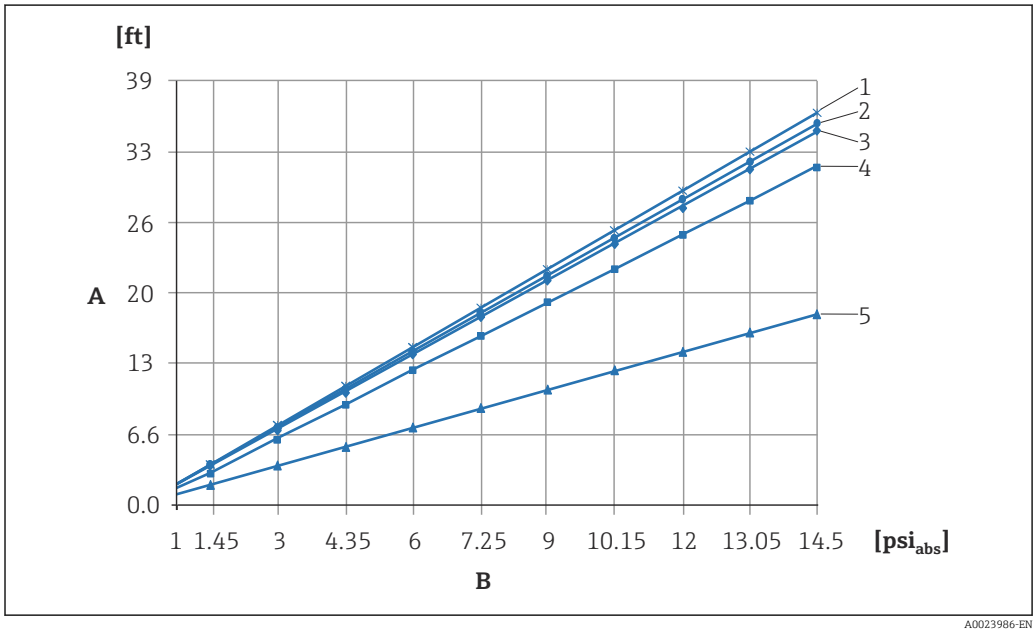

A0023986-EN

A Height difference H1
B Pressure at diaphragm seal
1 Low-temperature oil
2 Vegetable oil
3 Silicone oil
4 High-temperature oil
5 Inert oil

Certificates and approvals

Current certificates and approvals for the product are available at www.endress.com on the relevant product page:

1. Select the product using the filters and search field.
2. Open the product page.
3. Select **Downloads**.

CE mark

The device meets the legal requirements of the relevant EC directives. Endress+Hauser confirms that the device has been successfully tested by applying the CE mark.

RoHS

The measuring system complies with the substance restrictions of the Restriction on Hazardous Substances Directive 2011/65/EU (RoHS 2).

RCM marking

The supplied product or measuring system meets the ACMA (Australian Communications and Media Authority) requirements for network integrity, interoperability, performance characteristics as well as health and safety regulations. Here, especially the regulatory arrangements for electromagnetic compatibility are met. The products bear the RCM marking on the nameplate.

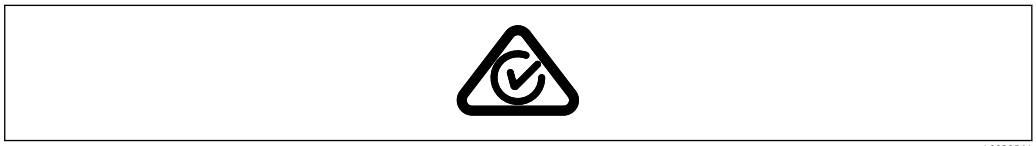

A0029561

Ex approvals

- ATEX
- IECEx
- FM
- CSA
- NEPSI
- Combinations of different approvals also

All explosion protection data are given in separate documentation which is available upon request. The Ex documentation is supplied as standard with all Ex devices .

Corrosion test

Standards and test methods:
- 316L: ASTM A262 Practice E and ISO 3651-2 Method A
- Alloy C22 and Alloy C276: ASTM G28 Practice A and ISO 3651-2 Method C
- 22Cr duplex, 25Cr duplex: ASTM G48 Practice A or ISO 17781 and ISO 3651-2 Method C

The corrosion test is confirmed for all wetted and pressure-bearing parts.

A 3.1 material certificate must be ordered as confirmation of the test.

EAC conformity

The measuring system meets the legal requirements of the applicable EAC guidelines. These are listed in the corresponding EAC Declaration of Conformity along with the standards applied.

The manufacturer confirms successful testing of the device by affixing to it the EAC mark.

Suitable for hygiene applications

For information on installation and approvals, see documentation SD02503F "Hygiene approvals".

For information on 3-A and EHEDG-tested adapters, see documentation TI00426F "Weld-in adapter, process adapter and flanges".

Certificate of current Good Manufacturing Practices (cGMP)

Product Configurator, order code for "Test, Certificate" option "JG"
- The certificate is only available in English
- Materials of construction of product wetted parts
- TSE compliance
- Polishing and surface finish
- Material/ compound compliance table (USP Class VI, FDA conformity)

Certificate of Compliance ASME BPE 2012

Ordering information:

Product Configurator, "Additional approval" ordering feature, option "LW"

Functional safety SIL

The Cerabar M with 4 to 20 mA output signal has been developed to assessed and certified by TÜV NORD CERT as per IEC 61508 Edition 2.0 and IEC 61511. These devices can be used to monitor the process level and pressure up to SIL 2. For a detailed description of the safety functions with Cerabar M, settings and functional safety data, see the "Functional safety manual - Cerabar M" SD00347P.

Ordering information:

Product Configurator, "Additional approval" ordering feature, option "LA"

CRN approval

PMC51

Some device versions have CRN approval. These devices are fitted with a separate plate bearing the registration number CRN 0F23358.5C.

A CRN-approved process connection can be obtained in one of the following ways:
- CRN-approved process connection must be ordered with a CSA approval
- CRN-approved process connection must be ordered with the "CRN" option in the order code for "Additional approval"

PMP51 and PMP55

Some device versions have CRN approval. A CRN-approved process connection with a CSA approval must be ordered for a CRN-approved device. PMP55 devices with a capillary are not CRN-approved. These devices are fitted with a separate plate bearing the registration number 0F22502.5C.

A CRN-approved process connection can be obtained in one of the following ways:
- CRN-approved process connection must be ordered with a CSA approval
- CRN-approved process connection must be ordered with the "CRN" option in the order code for "Additional approval"

AD2000

The pressure retaining material 316L (1.4435/1.4404) corresponds to AD2000 - W2/W10.

Pressure Equipment Directive 2014/68/EU (PED)

Pressure equipment with allowable pressure ≤ 200 bar (2 900 psi)

Pressure equipment (with a maximum allowable pressure PS ≤ 200 bar (2 900 psi)) can be classified as pressure accessories in accordance with Pressure Equipment Directive 2014/68/EU. If the maximum allowable pressure is ≤ 200 bar (2 900 psi) and the pressurized volume of the pressure equipment is ≤ 0.1 l, the pressure equipment is subject to the Pressure Equipment Directive (cf. Pressure Equipment Directive 2014/68/EU, Article 4, point 3). The Pressure Equipment Directive only requires that the pressure equipment shall be designed and manufactured in accordance with the "sound engineering practice of a Member State".

Reasons:

- Pressure Equipment Directive (PED) 2014/68/EU Article 4, point 3
- Pressure Equipment Directive 2014/68/EU, Commission´s Working Group "Pressure", Guideline A-05 + A-06

Note:

A partial examination shall be performed for pressure instruments that are part of safety equipment for the protection of a pipe or vessel from exceeding allowable limits (safety accessory in accordance with Pressure Equipment Directive 2014/68/EU, Article 2, point 4).

Pressure equipment with allowable pressure > 200 bar (2 900 psi)

Pressure equipment designated for application in every process fluid having a pressurized volume of <0.1 l and a maximum allowable pressure PS > 200 bar (2 900 psi) shall satisfy the essential safety requirements set out in Annex I of the Pressure Equipment Directive 2014/68/EU. According to Article 13, pressure equipment shall be classified by category in accordance with Annex II. The conformity assessment of the pressure equipment shall be determined by the category I under consideration of the above-mentioned low pressurized volume. These devices shall be provided with CE marking.

Reasons:

- Classification of pressure equipment acc. to Article 13 and Annex II of Pressure Equipment Directive 2014/68/EU
- Pressure Equipment Directive 2014/68/EU, Commission´s Working Group "Pressure", Guideline A-05

Note:

A partial examination shall be performed for pressure instruments that are part of safety equipment for the protection of a pipe or vessel from exceeding allowable limits (safety accessory in accordance with Pressure Equipment Directive 2014/68/EU, Article 2, point 4).

The following also applies:

- PMP51 /PMP55 with thread and internal process membrane PN > 200:
  Suitable for stable gases in group 1, category I, module A
- PMP55 with inline seal ≥ 1.5"/PN40:
  Suitable for stable gases in group 1, category II, module A2
- PMP55 with separators PN 400:
  Suitable for stable gases in group 1, category I, module A

Classification of process sealing between electrical systems and (flammable or combustible) process fluids in accordance with ANSI/ ISA 12.27.01

Endress+Hauser instruments are designed according to ANSI/ISA 12.27.01 either as single seal or dual seal devices with annunciation, allowing the user to waive the use and save the cost of installing external secondary process seals in the conduit as required by the process sealing sections of ANSI/ NFPA 70 (NEC) and CSA 22.1 (CEC). These instruments comply with the North-American installation practice and provide a very safe and cost-saving installation for pressurized applications with hazardous fluids.

Further information can be found in the control drawings of the relevant devices.

Inspection certificate

Designation	PMC51	PMP51	PMP55	Option [1]
3.1 Material documentation, wetted metal parts, EN10204-3.1 inspection certificate	✔	✔	✔	JA [2]
Declaration of Conformity NACE MR0175, wetted metal parts	✔	✔	✔	JB [2]
Declaration of Conformity NACE MR0103, wetted metal parts	✔	✔	✔	JE [2]
Conformity to AD2000, wetted metallic parts, excepting process membrane	—	✔	✔	JF
Surface finish measurement ISO4287/Ra, wetted metal parts, inspection certificate	✔	✔	✔	KB
Helium leak test, internal procedure, inspection certificate	✔	✔	✔	KD
Pressure test, internal procedure, inspection certificate	✔	✔	✔	KE
3.1 Material certificate+delta ferrite measurement, internal procedure, wetted metallic parts, EN10204-3.1 inspection certificate	✔	✔	✔	KF
3.1 Material certificate+PMI test (XRF), internal procedure, wetted metallic parts, EN10204-3.1 inspection certificate	—	✔	✔	KG
Welding documentation, wetted/pressurized seams	—	✔	—	KS

1) Product Configurator, order code for "Test, Certificate"
2) The selection of this feature for coated process membranes/process connections refers to the metallic base material.

Ordering information

Detailed ordering information is available as follows:
- In the Product Configurator on the Endress+Hauser website:www.endress.com → Click "Corporate" → Select your country → Click "Products" → Select the product using the filters and search field → Open product page → The "Configure" button to the right of the product image opens the Product Configurator.
- From your Endress+Hauser Sales Center:www.addresses.endress.com

Product Configurator - the tool for individual product configuration
- Up-to-the-minute configuration data
- Depending on the device: direct input of information specific to the measuring point, such as measuring range or operating language
- Automatic verification of exclusion criteria
- Automatic generation of the order code with its breakdown in PDF or Excel output format
- Ability to order directly in the Endress+Hauser Online Shop

Special device versions

Endress+Hauser offers special device versions as **T**echnical **S**pecial **P**roducts (TSP).

For further information please contact your local Endress+Hauser Sales Center.

Scope of delivery

- Device
- Optional accessories
- Brief Operating Instruction
- Calibration certificates
- Optional certificates

Measuring point (TAG)

Order code for	895: Marking
Option	Z1: Tagging (TAG), see additional spec.
Location of measuring point identification	To be selected in the additional specification: ▪ Tie-on label, stainless steel ▪ Adhesive paper label ▪ Label provided ▪ RFID TAG ▪ RFID TAG + tie-on label, stainless steel ▪ RFID TAG + adhesive paper label ▪ RFID TAG + label provided
Definition of measuring point identification	To be specified in additional specification: 3 lines each with a maximum of 18 characters The measuring point designation appears on the selected label and/or the RFID TAG.
Identification on electronic nameplate (ENP)	32 characters
Identification on display module	10 characters

Configuration data sheet (HART, IO-Link, PROFIBUS PA, FOUNDATION Fieldbus electronics)

IO-Link: The following data can only be selected for cyclic data and not for acyclic data.

Pressure

If the option "J" was selected for the order code for "Calibration; Unit" in the Product Configurator, the following configuration data sheet must be completed and included with the order.

Pressure unit			
❑ mbar	❑ mmH_2O	❑ mmHg	❑ Pa
❑ bar	❑ mH_2O	❑ kgf/cm^2	❑ kPa
❑ psi	❑ ftH_2O		❑ MPa
	❑ inH_2O		

Calibration range / output		
Lower range value (LRV):	_____	[Pressure unit]
Upper range value (URV):	_____	[Pressure unit]

Display	
1st Value Display [1]	2nd Value Display [1]
❑ Main value	❑ None (Default) ❑ Main Value [%] ❑ Pressure ❑ Current [mA] (HART only) ❑ Temperature

1) (Depending on measuring cell and communication version)

Damping		
Damping:	_____	sec (Default 2 sec)

Smallest calibratable span (preset at factory) → 🖹 9

Level

If the option "K" was selected for the order code for "Calibration; Unit" in the Product Configurator, the following configuration data sheet must be completed and included with the order.

Pressure unit

- ❑ mbar
- ❑ bar
- ❑ psi
- ❑ mmH_2O
- ❑ mH_2O
- ❑ ftH_2O
- ❑ inH_2O
- ❑ mmHg
- ❑ kgf/cm^2
- ❑ Pa
- ❑ kPa
- ❑ MPa

Output unit (scaled unit)

Mass	Lengths	Volume	Volume	Percent
❑ kg	❑ m	❑ l	❑ gal	❑ %
❑ t	❑ dm	❑ hl	❑ Igal	
❑ lb	❑ cm	❑ m^3		
	❑ mm	❑ ft^3		
	❑ ft	❑ in^3		
	❑ inch			

Empty pressure [a]: Low pressure value (empty) _____ [Pressure engineering unit]

Empty calibration [a]: Low level value (empty) _____ [Scaled unit]

Full pressure [b]: High pressure value (full) _____ [Pressure engineering unit]

Full calibration [b]: High level value (full) _____ [Scaled unit]

Example

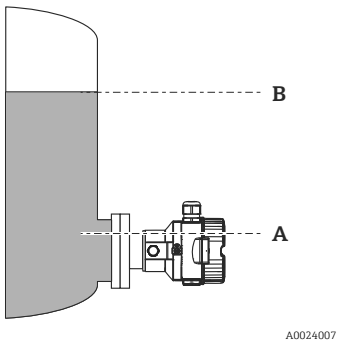

A 0 mbar / 0m
B 300 mbar (4.5 psi) / 3 m (9.8 ft)

Display

1st Value Display [1]

- ❑ Main value

2nd Value Display

- ❑ None (Default)
- ❑ Main Value [%]
- ❑ Pressure
- ❑ Current [mA] (HART only)
- ❑ Temperature

1) (Depending on measuring cell and communication version)

Damping

Damping: _____ sec (Default 2 sec)

Configuration data sheet (Analog electronics)

Pressure

If the option "J" was selected for the order code for "Calibration; Unit" in the Product Configurator, the following configuration data sheet must be completed and included with the order.

Pressure unit

❑ mbar	❑ mmH_2O	❑ mmHg	❑ Pa
❑ bar	❑ mH_2O	❑ kgf/cm^2	❑ kPa
❑ psi	❑ ftH_2O		❑ MPa
	❑ inH_2O		

Calibration range / output

Lower range value (LRV): _____ [Pressure unit]
Upper range value (URV): _____ [Pressure unit]

Display

1st Value Display [1]	2nd Value Display
❑ Main value	❑ None (Default)

1) (Depending on measuring cell and communication version)

Damping

Damping: _____ sec (Default 2 sec)

Smallest calibratable span (preset at factory) → 9

Supplementary documentation

For an overview of the scope of the associated Technical Documentation, refer to the following:
- *Device Viewer* (www.endress.com/deviceviewer): Enter the serial number from the nameplate
- *Endress+Hauser Operations App*: Enter the serial number from the nameplate or scan the 2D matrix code (QR code) on the nameplate

Standard documentation

- Technical Information: planning guide
  The document contains all the technical data on the device and provides an overview of the accessories and other products that can be ordered for the device
- Brief Operating Instructions: takes you quickly to the 1st measured value
  The Brief Operating Instructions contain all the essential information from incoming acceptance to initial commissioning
- Operating Instructions: reference manual
  The Operating Instructions contain all the information that is required in the various phases of the life cycle of the device: from product identification, incoming acceptance and storage, to mounting, connection, operation and commissioning through to troubleshooting, maintenance and disposal

Supplementary device-dependent documentation

Additional documents are supplied depending on the device version ordered: Always comply strictly with the instructions in the supplementary documentation. The supplementary documentation is an integral part of the device documentation.

Field of Activities

Pressure measurement, powerful instruments for process pressure, differential pressure, level and flow:

FA00004P/00/EN

Safety instructions

See Download area of the website.

Special Documentation

Document SD01553P

Mechanical accessories for pressure measuring devices

The documentation provides an overview of available manifolds, oval flange adapters, pressure gauge valves, shutoff valves, siphons, condensate pots, cable shortening kits, test adapters, flushing rings, block-and-bleed valves and protective roofs.

Accessories

Manifolds

→ 🖹 76

For details see SD01553P/00/EN "Mechanical accessories for pressure measuring devices".

Additional mechanical accessories

Oval flange adapters, pressure gauge valves, shutoff valves, siphons, condensate pots, cable shortening kits, adapter test, flushing rings, block&bleed valves, protective roofs.

For details see SD01553P/00/EN "Mechanical accessories for pressure measuring devices".

Welding necks and weld-in adapters

For dimensions and technical data see Technical Information TI00426F/00.

Designation	PMC51	PMP51	PMP55	Option [1]
Weld-in adapter G1/2, 316L,	–	✔	✔	QA
Weld-in adapter G1/2, 316L, 3.1 EN10204-3.1 material, inspection certificate	–	✔	✔	QB
Weld-in tool adapter G1/2, brass	–	✔	✔	QC
Weld-in adapter G1, 316L, conical metal joint	–	✔	–	QE
Weld-in adapter G1, 316L, 3.1 EN10204-3.1 material, inspection certificate, conical metal joint	–	✔	–	QF
Weld-in tool adapter G1, brass conical metal joint	–	✔	–	QG
Weld-in adapter G1/2, 316L, for G1/2 A DIN 3852	–	✔	–	QM
Weld-in adapter G1/2, 316L, 3.1, for G1/2 A DIN 3852, EN10204-3.1 material, inspection certificate	–	✔	–	QN
Weld-in adapter G1-1/2, 316L	✔	✔	✔	QJ
Weld-in adapter G1-1/2, 316L, 3.1 EN10204-3.1 material, inspection certificate	✔	✔	✔	QK
Weld-in tool adapter G1-1/2, brass	✔	✔	✔	QL
Weld-in flange DRD DN50 65mm, 316L	✔	✔	✔	QP
Weld-in fl. DRD DN50 65mm, 316L 3.1 EN10204-3.1 material, inspection certificate	✔	✔	✔	QR
Weld-in tool flange DRD DN50 65mm, brass	✔	✔	✔	QS
Weld-in adapter Uni D65, 316L	✔	–	–	QT
Weld-in adapter Uni D65, 316L, 3.1 EN10204-3.1 material, inspection certificate	✔	–	–	QU
Weld-in tool adapter Uni D65/D85, brass	✔	–	–	Q1
Weld-in adapter Uni D85, 316L	✔	–	–	Q2
Weld-in adapter Uni D85, 316L, 3.1 EN10204-3.1 material, inspection certificate	✔	–	–	Q3
Adapter Uni > DIN11851 DN40, 316L, slotted-nut	✔	–	–	RA
Adapter Uni > DIN11851 DN50, 316L, slotted-nut	✔	–	–	RB
Adapter Uni > DRD DN50 65mm, 316L	✔	–	–	RC
Adapter Uni > Clamp 2", 316L	✔	–	–	RD
Adapter Uni > Clamp 3", 316L	✔	–	✔	RE
Adapter Uni > Varivent N, 316L	✔	–	–	RF
Adapter Uni > Cherry Burell 2", 316L	✔	–	–	RH
Adapter Uni > DIN11851 DN40, 316L, 3.1, slotted-nut, EN10204-3.1 material, inspection certificate	✔	–	–	R1
Adapter Uni > DIN11851 DN50, 316L, 3.1, slotted-nut, EN10204-3.1 material, inspection certificate	✔	–	–	R2
Adapter Uni > DRD DN50 65mm, 316L, 3.1 EN10204-3.1 material, inspection certificate	✔	–	–	R3
Adapter Uni > Clamp 2", 316L, 3.1 EN10204-3.1 material, inspection certificate	✔	–	–	R4
Adapter Uni > Clamp 3", 316L, 3.1 EN10204-3.1 material, inspection certificate	✔	–	✔	R5

Designation	PMC51	PMP51	PMP55	Option [1]
Adapter Uni > Varivent, 316L, 3.1 EN10204-3.1 material, inspection certificate	✔	–	–	R6
Adapter Uni > Cherry Burell, 316L, 3.1 EN10204-3.1 material, inspection certificate	✔	–	–	R7

1) Product Configurator, order code for "Accessories"

For dimensions and technical data see Technical Information TI00426F/00.

Mounting bracket for wall and pipe mounting

→ 38

M12 connector

→ 19

Service-specific accessories

Accessories	Description
DeviceCare SFE100	Configuration tool for HART, PROFIBUS and FOUNDATION Fieldbus field devices Technical Information TI01134S DeviceCare is available for download at www.software-products.endress.com. You need to register in the Endress+Hauser software portal to download the application.
FieldCare SFE500	FDT-based plant asset management tool FieldCare can configure all smart field units in your plant and helps you manage them. By using the status information, FieldCare is also a simple but effective way of checking the status and condition of the field devices. Technical Information TI00028S
FieldPort SFP20	**Mobile configuration tool for all IO-Link devices:** ▪ Pre-installed device and CommDTMs in FieldCare ▪ Pre-installed device and CommDTMs in FieldXpert ▪ M12 connection for IO-Link field devices
Field Xpert SMT70, SMT77	The Field Xpert SMT70 tablet PC for device configuration enables mobile plant asset management in hazardous (Ex Zone 2) and non-hazardous areas. It is suitable for commissioning and maintenance staff. It manages Endress+Hauser and third-party field instruments with a digital communication interface and documents the progress of the work. The SMT70 is designed as a complete solution. It comes with a pre-installed driver library and is an easy-to-use, touch-enabled tool for managing field devices throughout their entire life cycle. The Field Xpert SMT77 for device configuration enables mobile plant asset management in areas categorized as Ex Zone 1. It is suitable for commissioning and maintenance staff for easy management of field instruments with a digital communication interface. The touch-enabled tablet PC is designed as a complete solution. It comes with comprehensive pre-installed driver libraries and offers users a modern software user interface to manage field instruments throughout the entire life cycle.

Registered trademarks

- KALREZ®
  Registered label of E.I. Du Pont de Nemours & Co., Wilmington, USA
- TRI-CLAMP®
  Registered label of Ladish & Co., Inc., Kenosha, USA
- HART®
  Registered trademark of the FieldComm Group, Austin, USA
- IO-Link
  Registered trademark of the IO-Link Community.

- PROFIBUS PA®
  Trademark of the PROFIBUS User Organization, Karlsruhe, Germany
- FOUNDATION™ Fieldbus
  Registered trademark of the FieldComm Group, Austin, USA
- GORE-TEX® trademark of W.L. Gore & Associates, Inc., USA

LENNTECH
Water Treatment Solutions
info@lenntech.com Tel. +31-152-610-900
www.lenntech.com Fax. +31-152-616-289

Endress+Hauser
People for Process Automation