Technical Information

Liquiphant M
FTL50, FTL51, FTL50H, FTL51H

Vibronic

Point level switch for all kinds of liquids

Application

- Process temperatures from −50 °C to 150 °C (-58 to 302 °F)
- Pressures up to 100 bar (1450 psi)
- Viscosities up to 10,000 mm^2/s (cSt)
- For liquids with densities ≥ 0.5 g/cm^3(SGU)

FTL50: Compact design
FTL51: Extension pipe up to 3 m (9.8 ft) and up to 6 m (20 ft) on request
FTL50H, FTL51H: Certified for the food and pharmaceutical industries

Ideal substitute for float switches, as reliable function not affected by flow, turbulence, bubbles, foam, vibration, solids content or buildup.

Your benefits

- Recommended for safety systems requiring functional safety to SIL2/SIL3 as per IEC 61508/IEC 61511-1
- Design in accordance with ASME B31.3
- Recommended for use in sterile applications in the life science industry (design in accordance with ASME BPE)
- No adjustment: quick, low-cost startup
- No mechanically moving parts: no maintenance, no wear, long operating life
- Functional safety: Monitoring of tuning fork for damage
- Compact stainless steel housing (optional): the IP69 protection rating guarantees that the unit remains impermeable, even in the event of intensive cleaning or flooding for several hours

Endress+Hauser
People for Process Automation

Table of contents

Application 4
Point level detection 4

Function and system design 4
Measuring principle 4
Modularity 4
Electronic versions 5
Electronics for continuous density measurement 5
Galvanic isolation 5
Design 5

Input 5
Measured variable 5
Measuring range (detection range) 5
Density 5

Electronic insert FEL51 (AC 2-wire) 6
Power supply 6
Electrical connection 6
Output signal 6
Signal on alarm 6
Connectable load 6

Electronics FEL51 (AC, in compact housing) 8
Power supply 8
Electrical connection 8
Output signal 8
Signal on alarm 8
Connectable load 9

Electronic insert FEL52 (DC PNP) 10
Power supply 10
Electrical connection 10
Output signal 10
Signal on alarm 10
Connectable load 10

Electronics FEL52 (DC PNP, in compact housing) . . 11
Power supply 11
Electrical connection 11
Output signal 11
Signal on alarm 12
Connectable load 12

Electronic insert FEL54 (AC/DC with relay output) . 13
Power supply 13
Electrical connection 13
Output signal 13
Signal on alarm 13
Connectable load 13

Electronic insert FEL55 (8/16 mA) 14
Power supply 14
Electrical connection 14
Output signal 14
Signal on alarm 14
Connectable load 14

Electronic insert FEL56 (NAMUR L-H edge) 15
Power supply 15
Electrical connection 15
Output signal 15
Signal on alarm 15
Connectable load 15

Electronic insert FEL58 (NAMUR H-L edge) 16
Power supply 16
Electrical connection 16
Output signal 16
Signal on alarm 16
Connectable load 16

Electronics FEL58 (NAMUR H-L edge, compact housing) 17
Power supply 17
Electrical connection 17
Output signal 17
Signal on alarm 17
Connectable load 17

Electronic insert FEL57 (PFM) 18
Power supply 18
Electrical connection 18
Output signal 19
Signal on alarm 19
Connectable load 19

Electronic insert FEL50A (PROFIBUS PA) 20
Power supply 20
Electrical connection 20
Output signal 21
Signal on alarm 21

Electronic insert FEL50D (density) 22
Power supply 22
Electrical connection 22
Signal on alarm 22
Adjustment 22
Operating principle 23
Light signals 23

Connection and function 24
Connecting cables 24
Safety mode 24
Switching time 24
Switch-on behavior 24

Performance characteristics 24
Reference operating conditions 24
Maximum measured error 24
Repeatability 24
Hysteresis 24

Influence of medium temperature 24
Influence of medium density 24
Influence of medium pressure 24
Switching delay 24

Operating conditions. 25
Installation 25
Examples of mounting 25
Orientation 27

Environment. 27
Ambient temperature range 27
Storage temperature 27
Installation height as per IEC61010-1 Ed.3 27
Climate class 27
Degree of protection 28
Vibration resistance 28
Electromagnetic compatibility 28

Medium conditions 29
Medium temperature 29
Thermal shock 29
Medium pressure pe 29
Test pressure 29
State of aggregation 29
Density 29
Viscosity 29
Solids content 29
Lateral loading capacity 29

Mechanical construction 30
Design 30
Dimensions 31
Weights 36
Materials and surfaces 36
Process connections 37

Human interface 38
Electronic inserts 38
Compact housing 38
Operating concept 41

Certificates and approvals 41
CE mark 41
RoHS 41
RCM-tick mark 41
EAC conformity 41
CRN approval 41
Pressure Equipment Directive 2014/68/EU (PED) 41
Process seal according to ANSI/ISA 12.27.01 42
General approvals 42
Certificate of current Good Manufacturing Practises (cGMP) 43
Other certificates 43
Manufacturer declarations 43
Use in hazardous zones 43
ASME B 31.3 44
Pressure equipment directive 44

Ordering information 44

Accessories 44
Weld-in adapter 44
Weather protection cover 46
Lap joint flange 47
Lap joint flanges 47
Sliding sleeves for unpressurized operation 47
High pressure sliding sleeves 48
Cover with sight glass 49
Cover with sight glass 49
Circular connector 49

Documentation. 50
Operating Instructions 50
Technical Information 50
Functional safety (SIL) 50
Safety Instructions 51
Safety Instructions (NEPSI) 51
Control Drawings 51

Application

Point level detection

Maximum or minimum detection in tanks or pipes containing all kinds of liquids, including use in hazardous areas, food and pharmaceuticals.

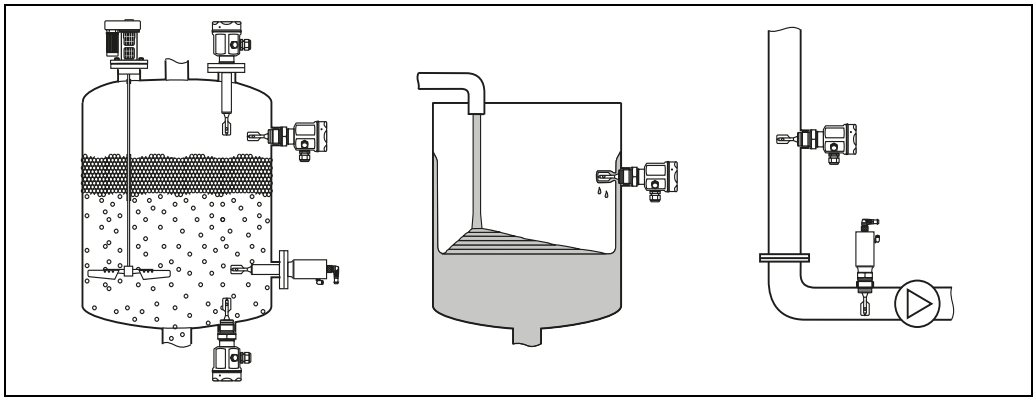

L00-FTL5xxxx-11-05-xx-xx-000

Function and system design

Measuring principle

The sensor's fork vibrates at its intrinsic frequency. This frequency is reduced when covered with liquid. This change in frequency causes the point level switch to switch.

Modularity

Point level switch
Liquiphant M FTL with electronic versions
FEL51, FEL52, FEL54

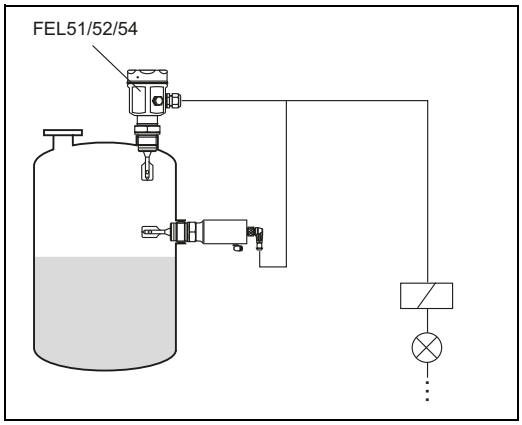

L00-FTL5xxxx-15-05-xx-xx-000

Point level switch
Liquiphant M FTL with electronic versions
FEL55, FEL56, FEL57, FEL58
for connecting to a separate switching unit
or an isolating amplifier FEL50A
for connecting to a PROFIBUS PA segment

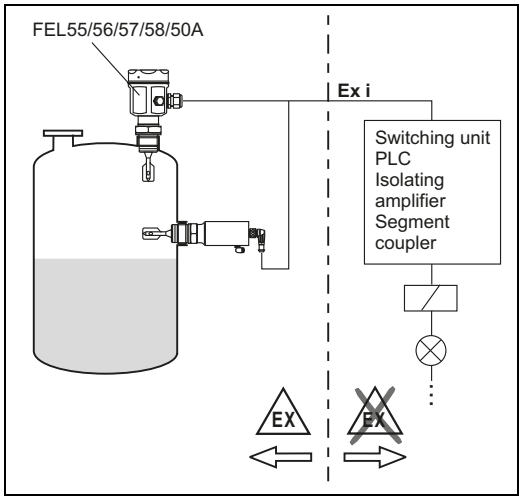

L00-FTL5xxxx-15-05-xx-en-000

Electronic versions	FEL51: Two-wire AC version; Switches the load directly into the power supply circuit via an electronic switch. FEL52: Three-wire DC version; Switches the load via the transistor (PNP) and separate connection e.g. in conjunction with programmable logic controllers (PLCs), DI modules as per EN 61131-2. FEL54: Universal current version with relay output; Switches the loads via 2 floating change-over contacts. FEL55: Signal transmission 16/8 mA on two-wire cabling e.g. in conjunction with programmable logic controllers (PLCs), AI modules 4 to 20 mA as per EN 61131-2. FEL56: For separate switching unit; signal transmission L-H edge 0.6 to 1.0 / 2.2 to 2.8 mA to EN 50227 (NAMUR) on two-wire cabling. FEL58: For separate switching unit; signal transmission H-L edge 2.2 to 3.5 / 0.6 to 1.0 mA to EN 50227 (NAMUR) on two-wire cabling. Checking of connecting cabling and other devices by pressing a key on the electronic insert. FEL57: For separate switching unit; PFM signal transmission; Current pulses superposed on the power supply along the two-wire cabling. Proof test from the switching unit without changing levels. FEL50A: For connecting to PROFIBUS PA; Cyclic and acyclic data exchange acc. to PROFIBUS-PA Profile 3.0 Discrete Input
Electronics for continuous density measurement	FEL50D: For connecting to Density Computer FML621
Galvanic isolation	FEL51, FEL52, FEL50A: between sensor and power supply FEL54: between sensor and power supply and load FEL55, FEL56, FEL57, FEL58, FEL50D: see connected switching unit
Design	FTL50: Compact FTL51: With extension pipe FTL50H: Compact, with polished tuning fork and hygienic process connections FTL51H: With extension pipe, polished tuning fork and hygienic process connections

Input

Measured variable	Level (limit value)
Measuring range (detection range)	FTL50: dependent on mounting point FTL51: dependent on mounting point and the extension pipe ordered. Standard extension pipe up to 3 m (9.8 ft) and up to 6 m (20 ft) on request.
Density	Setting on the electronic insert > 0.5 g/cm^3 (SGU) or > 0.7 g/cm^3 (SGU) (others on request)

Electronic insert FEL51 (AC 2-wire)

Power supply

Supply voltage: AC 19 to 253 V
Power consumption: < 0.83 W
Residual current consumption: < 3.8 mA
Short-circuit protection
Overvoltage protection FEL51: overvoltage category III

Electrical connection

Two-wire AC connection

Switches the load directly into the power supply circuit via an electronic switch.

Always connect in series with a load!

Check the following:
- The residual current in blocked state (up to 3.8 mA)
- That for low voltage
  - the voltage drop across the load is such that the minimum terminal voltage at the electronic insert (19 V) when blocked is not undershot.
  - the voltage drop across the electronics when switched through is observed (up to 12 V)
- That a relay cannot de-energize with holding power below 3.8 mA.
  If this is the case, a resistor should be connected parallel to the relay. An RC module is available under the part number: 71107226
- When selecting the relay, pay attention to the holding power / rated power (see "Connectable load")

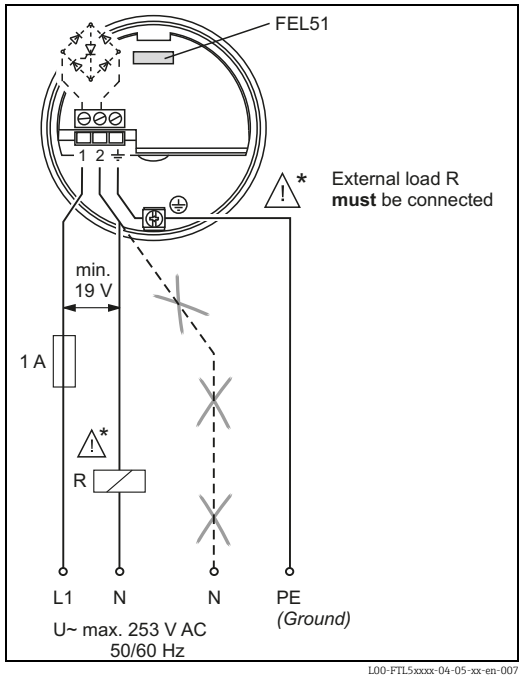

L00-FTL5xxxx-04-05-xx-en-007

Output signal

I_L = load current (switched through)

< 3.8 mA = residual current (blocked)

☼ = lit

● = unlit

L00-FTL2xxxx-07-05-xx-xx-000

Safety mode	Level	Output signal	LEDs green	LEDs red
MAX		1 —I_L→ 2	☼	●
		1 - < 3.8 mA - → 2	☼	☼
MIN		1 —I_L→ 2	☼	●
		1 - < 3.8 mA - → 2	☼	☼

L00-FTL5xxxx-04-05-xx-xx-001

Signal on alarm

Output signal on power failure or in the event of damaged sensor: < 3.8 mA

Connectable load

- Voltage drop via FEL51 ≤ 12 V
- Residual current if electrical switch is blocked: ≤ 3.8 mA
- Load switched directly into the power supply circuit via the thyristor.
  Transient (40 ms) ≤ 1.5 A, ≤ 375 VA at 253 V or ≤ 36 VA at 24 V (not short-circuit-proof)

The load is switched via an electronic switch directly in the power circuit.
Always connect in series with a load!
Not suitable for connection to low-voltage PLC inputs!

Selection guide for relays

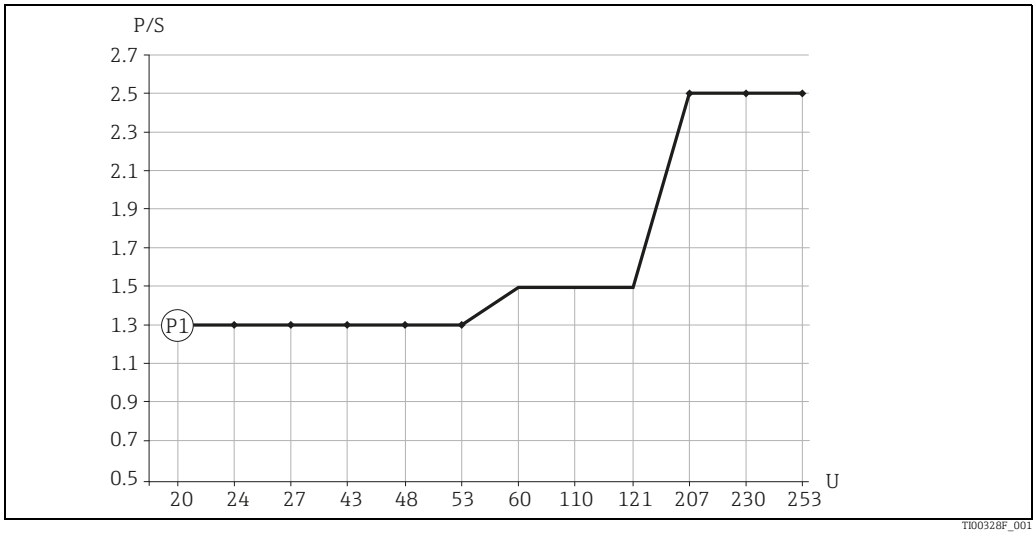

Minimum nominal power of load
P/S nominal power in [W] / [VA]
U operating voltage in [V]

Position	Operating voltage	Nominal power	
		min.	max.
P1 AC operation	24 V	> 1.3 VA	< 8.4 VA
	110 V	> 1.5 VA	< 38.5 VA
	230 V	> 2.5 VA	< 80.5 VA

Relays with less nominal power can be operated via an RC module connected in parallel (optional).

Electronics FEL51 (AC, in compact housing)

Power supply

Supply voltage: AC 19 to 253 V
Power consumption: < 0.83 W
Residual current consumption: < 3.8 mA
Short-circuit protection
Overvoltage protection FEL51: overvoltage category III

Electrical connection

Two-wire AC connection

	Connector	MAX	MIN
Switches the load directly into the power supply circuit via an electronic switch. Always connect in series with a load! Check the following: ▪ The residual current in blocked state (up to 3.8 mA) ▪ That for low connection voltage – the voltage drop across the load is such that the minimum terminal voltage at the electronic insert (19 V) when blocked is not undershot. – the voltage drop across the electronics when switched through is observed (up to 12 V)	FTL5#(H)- #######C3#	(GN/YE) 1 (BU) 3 (BN) > 19 V R 1.0 A PE (Ground) L1 N	(GN/YE) 1 (BU) 2 (BK) > 19 V R 1.0 A PE (Ground) L1 N
	FTL5#(H)- #######D3# (Pg11) oder FTL5#(H)- #######E3# (NPT ½") -30°C ≤ TA ≤ +70°C -22° F ≤ TA ≤ +158°F	1 3 > 19 V R 1.0 A PE (Ground) L1 N	1 2 > 19 V R 1.0 A PE (Ground) L1 N

L00-FTL5xxxx-04-05-xx-xx-012

▪ That a relay cannot de-energize with holding power below 3.8 mA.
If this is the case, a resistor should be connected parallel to the relay (e.g. RC module: part number 71107226).

▪ When using in conjunction with a cable end (FTL5#(H)- #######C3#), the compact housing should only be used in enclosed areas.

Output signal

I_L = load current (switched through)

< 3.8 mA = residual current (blocked)

☼ = lit

● = unlit

L00-FTL2xxxx-07-05-xx-xx-000

Safety mode	Level	Output signal	LEDs green	LEDs red
MAX		1 —I_L→ 3	☼	●
		1 - < 3.8 mA - → 3	☼	☼
MIN		1 —I_L→ 2	☼	●
		1 - < 3.8 mA - → 2	☼	☼

L00-FTL5xxxx-04-05-xx-xx-001a

Signal on alarm

Output signal on power failure or in the event of damaged sensor: < 3.8 mA

Connectable load

- Voltage drop via FEL51 ≤ 12 V
- Residual current if electrical switch is blocked: ≤ 3.8 mA
- Load switched directly into the power supply circuit via the thyristor.
  Transient (40 ms) ≤ 1.5 A, ≤ 375 VA at 253 V or ≤ 36 VA at 24 V (not short-circuit-proof)

The load is switched via an electronic switch directly in the power circuit.
Always connect in series with a load!
Not suitable for connection to low-voltage PLC inputs!

Selection guide for relays

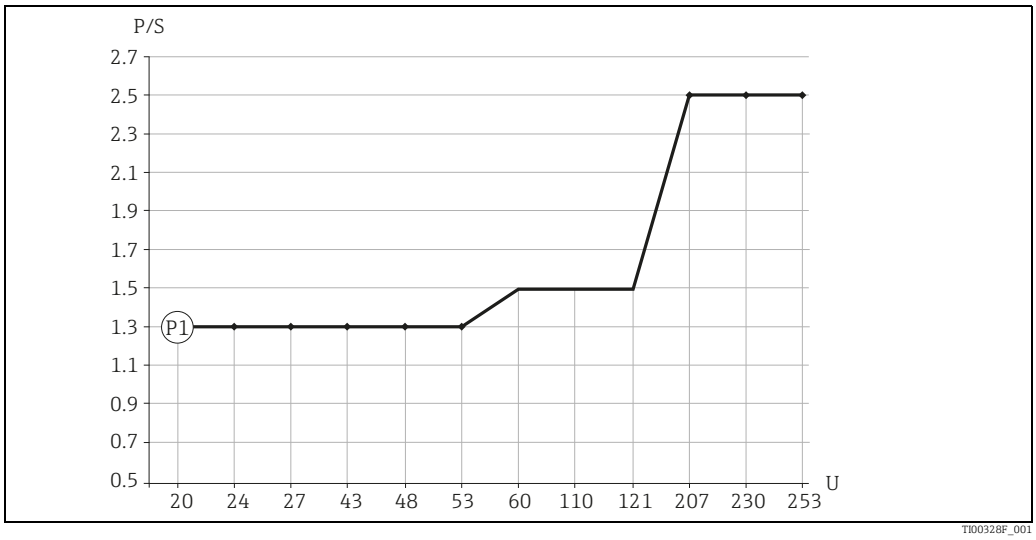

Minimum nominal power of load
P/S nominal power in [W] / [VA]
U operating voltage in [V]

Position	Operating voltage	Nominal power	
		min.	max.
P1 AC operation	24 V	> 1.3 VA	< 8.4 VA
	110 V	> 1.5 VA	< 38.5 VA
	230 V	> 2.5 VA	< 80.5 VA

Relays with less nominal power can be operated via an RC module connected in parallel (optional).

Electronic insert FEL52 (DC PNP)

Power supply

Supply voltage: DC 10 to 55 V
Ripple: ≤ 1.7 V, 0 to 400 Hz
Current consumption: ≤ 15 mA
Power consumption: ≤ 0.83 W
Reverse polarity protection
Overvoltage protection FEL52: overvoltage category III

Electrical connection

Three-wire DC connection

Switches the load via the transistor (PNP) and separate connection. Preferably used with programmable logic controllers (PLC), DI modules as per EN 61131-2.
Positive signal at switching output of the electronics (PNP); Output blocked on reaching point level.

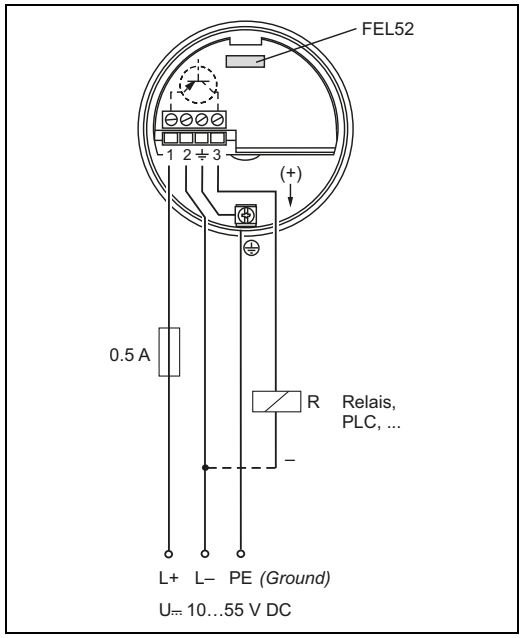

L00-FTL5xxxx-04-05-xx-xx-030

Output signal

I_L = load current (switched through)

< 100 µA = residual current (blocked)

☼ = lit

● = unlit

L00-FTL2xxxx-07-05-xx-xx-000

Safety mode	Level	Output signal	LEDs green	LEDs red
MAX		L+ 1 I_L + 3	☼	●
		1 < 100 µA 3	☼	☼
MIN		L+ 1 I_L + 3	☼	●
		1 < 100 µA 3	☼	☼

L00-FTL5xxxx-04-05-xx-xx-004

Signal on alarm

Output signal on power failure or in the event of damaged sensor: < 100 µA

Connectable load

- Load switched via the transistor and separate PNP connection, ≤ DC 55 V
- Load current ≤ 350 mA (pulsed overload and short-circuit protection)
- Residual current < 100 µA (with transistor blocked).
- Capacitance load ≤ 0.5 µF at 55 V, ≤ 1.0 µF at 24 V
- Residual voltage < 3 V (with transistor switched through);

Electronics FEL52 (DC PNP, in compact housing)

Power supply

Supply voltage: DC 10 to 55 V
Ripple: ≤ 1.7 V, 0 to 400 Hz
Current consumption: ≤ 15 mA
Power consumption: ≤ 0.83 W
Reverse polarity protection
Overvoltage protection FEL52: overvoltage category III

Electrical connection

Three-wire DC connection

Preferably used with programmable logic controllers (PLC), DI module as per EN 61131-2.
Positive signal at switching output of the electronics (PNP);
Output blocked on reaching point level.

Note!
When using in conjunction with a cable end (FTL5#(H)-#######C3#), the compact housing should only be used in enclosed areas.

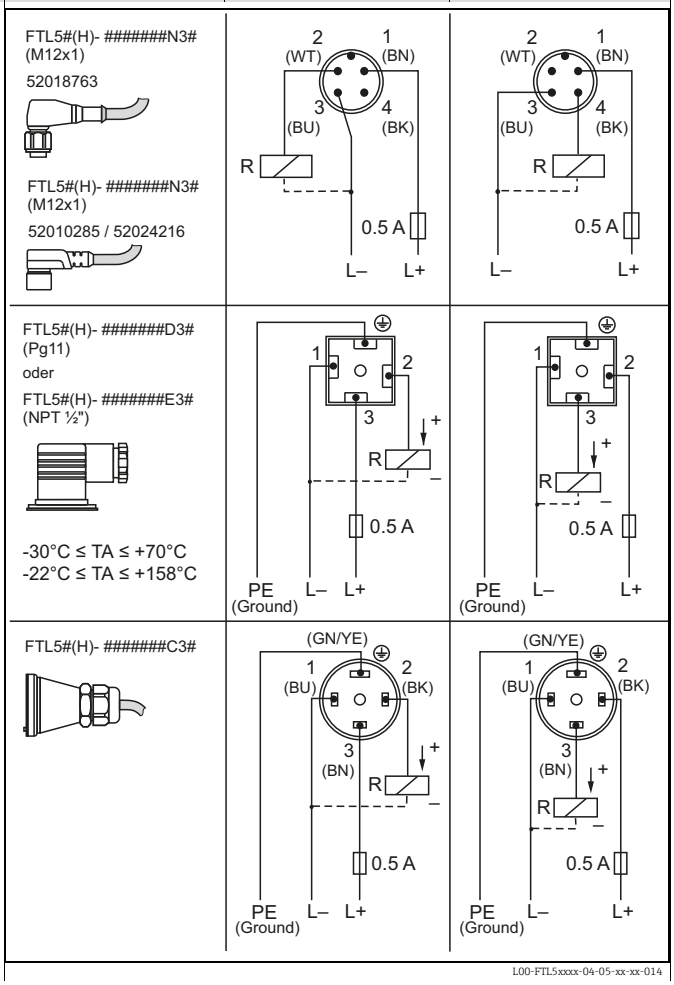

Output signal

With valve connector or cable tail

I_L = load current (switched through)

< 100 µA = residual current (blocked)

☼ = lit

● = unlit

L00-FTL2xxxx-07-05-xx-xx-000

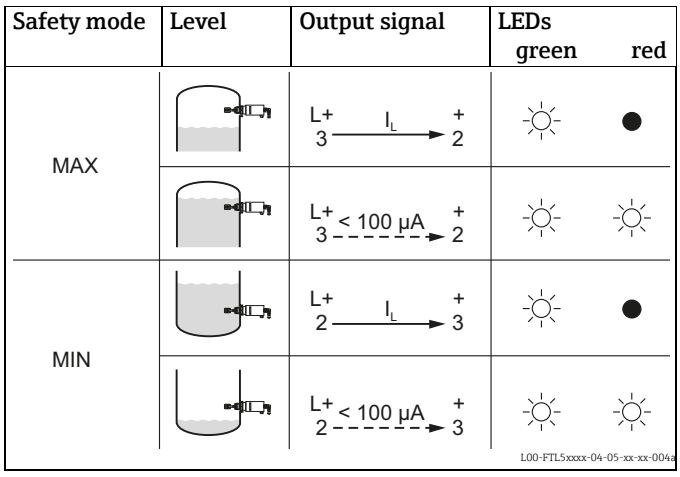

With M12x1 connector 52010285 / 52024216 (without LEDs)

L00-FTL5xxxx-16-05-xx-xx-002

I_L = load current (switched through)

< 100 µA = residual current (blocked)

☼ = lit

● = unlit

L00-FTL2xxxx-07-05-xx-xx-000

Safety mode	Level	Output signal	LEDs
MAX		L+ 1 I_L – 2	☼ ●
		L+ 1 < 100 µA – 2	☼ ☼ ●
MIN		L+ 1 I_L – 4	☼ ☼ ●
		L+ 1 < 100 µA – 4	☼ ●

L00-FTL5xxxx-04-05-xx-xx-010

With M12x1 connector 52018763 (with LEDs)

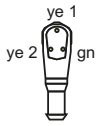

L00-FTL5xxxx-16-05-xx-xx-001

I_L = load current (switched through)

< 100 µA = residual current (blocked)

☼ = lit

● = unlit

L00-FTL2xxxx-07-05-xx-xx-000

Safety mode	Level	Output signal	LEDs
MAX		L+ 1 I_L – 2	● ☼
		L+ 1 < 100 µA – 2	● ☼ ☼
MIN		L+ 1 I_L – 4	● ☼ ☼
		L+ 1 < 100 µA – 4	☼ ●

L00-FTL5xxxx-04-05-xx-xx-011

Signal on alarm

Output signal on power failure or in the event of damaged sensor: < 100 µA

Connectable load

- Load switched via the transistor and separate PNP connection, ≤ DC 55 V
- Load current ≤ 350 mA (pulsed overload and short-circuit protection)
- Residual current < 100 µA (with transistor blocked).
- Capacitance load ≤ 0.5 µF at 55 V, ≤ 1.0 µF at 24 V
- Residual voltage < 3 V (with transistor switched through);

Electronic insert FEL54 (AC/DC with relay output)

Power supply

Supply voltage: AC 19 to 253 V, 50/60 Hz or DC 19 to 55 V
Power consumption: ≤ 1.3 W
Reverse polarity protection
Overvoltage protection FEL54: overvoltage category III

Electrical connection

Universal current connection with relay output

Power supply:
Please note the different voltage ranges for AC and DC.AC.

Output:
When connecting an instrument with high inductance, provide a spark arrester to protect the relay contact.
A fine-wire fuse (depending on the load connected) protects the relay contact on short-circuiting.
Both relay contacts switch simultaneously.

* When jumpered, the relay output works with NPN logic.

** See "Connectable load"

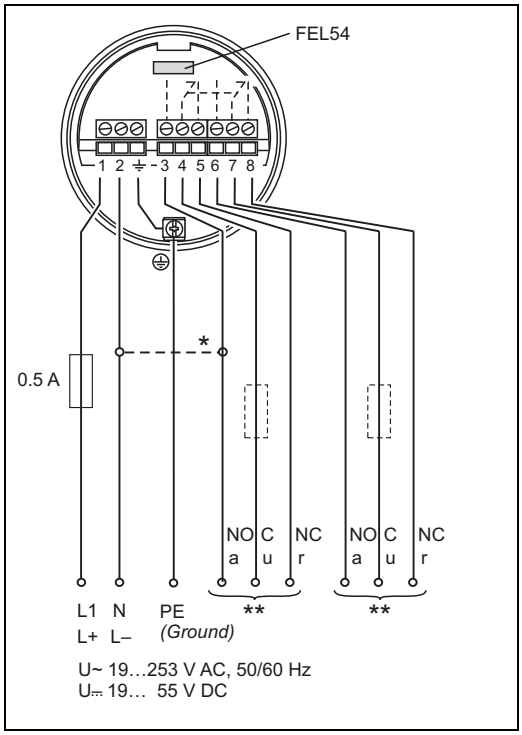

L00-FTL5xxxx-04-05-xx-xx-002

Output signal

= relay energized

= relay de-energized

= lit

= unlit

L00-FTL2xxxx-07-05-xx-xx-001

Safety mode	Level	Output signal	LEDs green	LEDs red
MAX		3 4 5 / 6 7 8	☼	●
		3 4 5 / 6 7 8	☼	☼
MIN		3 4 5 / 6 7 8	☼	●
		3 4 5 / 6 7 8	☼	☼

L00-FTL5xxxx-04-05-xx-xx-005

Signal on alarm

Output signal on power failure or in the event of damaged sensor: relay de-energized

Connectable load

- Loads switched via 2 floating change-over contacts (DPDT).
- I~ ≤ 6 A (Ex de 4 A), U~ ≤ AC 253 V; P~ ≤ 1500 VA, cos φ = 1, P~ ≤ 750 VA, cos φ > 0.7
- I⎓ ≤ 6 A (Ex de 4 A) to DC 30 V , I⎓ ≤ 0.2 A to 125 V
- When connecting a low-voltage circuit with double insulation according to IEC 1010, the following applies: the sum of the voltages of the relay output and power supply is ≤ 300 V
- The electronic insert FEL52 DC-PNP is preferred for low DC load currents (e.g. when connecting to a PLC)
- Relay contact material: silver/nickel AgNi 90/10

Electronic insert FEL55 (8/16 mA)

Power supply

Supply voltage: DC 11 to 36 V
Power consumption: < 600 mW
Reverse polarity protection
Overvoltage protection FEL55: overvoltage category III

Electrical connection

Two-wire connection for separate switching unit

For separate switching unit.
Signal transmission 16/8 mA on two-wire cabling.
For connection to programmable logic controllers (PLC) for example, AI modules 4 to 20 mA to EN 61131-2.
Output signal jump from high to low current on point level.

Fuse required for non-Ex applications!
Only use power units with safe galvanic isolation (e.g. SELV).

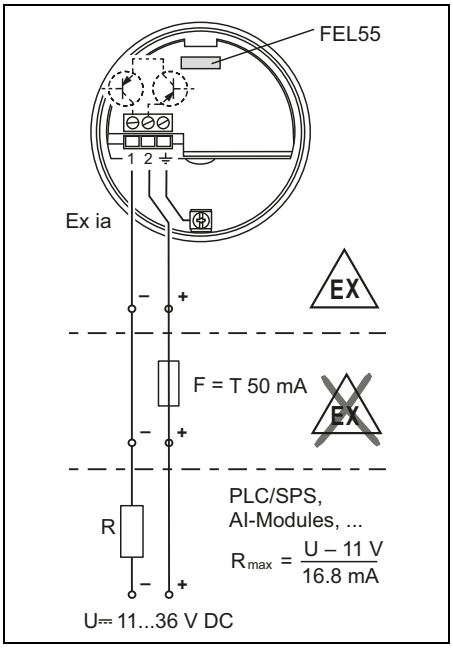

L00-FTL5xxxx-04-05-xx-en-000

Output signal

~ 16 mA = 16 mA ± 5 %

~ 8 mA = 8 mA ± 6 %

☼ = lit

● = unlit

L00-FTL2xxxx-07-05-xx-xx-000

Safety mode	Level	Output signal	LEDs green	LEDs red
MAX		+ 2 ~16 mA → 1	☼	●
		+ 2 ~8 mA → 1	☼	☼
MIN		+ 2 ~16 mA → 1	☼	●
		+ 2 ~8 mA → 1	☼	☼

L00-FTL5xxxx-04-05-xx-xx-006

Signal on alarm

Output signal on power failure or in the event of damaged sensor: < 3.6 mA

Connectable load

- R = (U - 11 V) : 16.8 mA
- U = connection voltage: DC 11 to 36 V (in wet environments DC 11 to 35 V)

Example: PLC with 250 Ω with 2-wire version

250 Ω = (U – 11V) / 16.8 mA
4.2 [Ω /A] = U – 11 V
U = 15.2 V

Electronic insert FEL56 (NAMUR L-H edge)

Power supply

Supply voltage: DC 8.2 V ±20 %
Power consumption: < 6 mW at I < 1 mA; < 38 mW at I = 2.8 mA
Connection data interface: IEC 60947-5-6

Electrical connection

Two-wire connection for separate switching unit

For connecting to isolating amplifiers acc. to NAMUR (IEC 60947-5-6), e.g. FTL325N, FTL375N from Endress+Hauser.
Output signal jump from low to high current on point level.

(L–H edge)

Connecting to multiplexer:
Set clock time to min. 2 s.

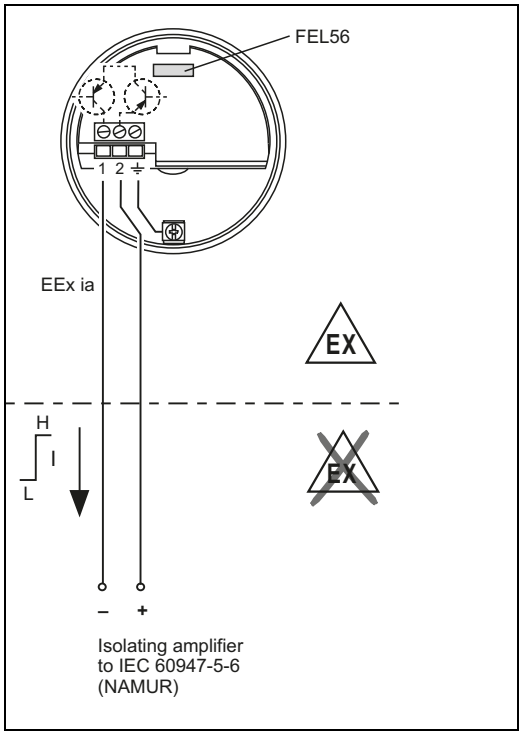

L00-FTL5xxxx-04-05-xx-en-004

Output signal

= lit

= flashes

= unlit

L00-FTL5xxxx-07-05-xx-xx-002

Safety mode	Level	Output signal	LEDs green	LEDs red
MAX		+ 2 → 1: 0.6 … 1.0 mA	flashes	unlit
		+ 2 → 1: 2.2 … 2.8 mA	flashes	lit
MIN		+ 2 → 1: 0.6 … 1.0 mA	flashes	unlit
		+ 2 → 1: 2.2 … 2.8 mA	flashes	lit

L00-FTL5xxxx-04-05-xx-xx-003

Signal on alarm

Output signal in the event of damaged sensor: > 2.2 mA

Connectable load

See Technical Data of the isolating amplifier connected according to IEC 60947–5–6 (NAMUR)

Electronic insert FEL58 (NAMUR H-L edge)

Power supply

Supply voltage: DC 8.2 V ±20 %
Power consumption: < 6 mW at I < 1 mA; < 38 mW at I = 3.5 mA
Connection data interface: IEC 60947-5-6

Electrical connection

Two-wire connection for separate switching unit

For connecting to isolating amplifiers as per NAMUR (IEC 60947-5-6), e.g. FTL325N, FTL375N from Endress+Hauser.
Output signal jump from high to low current on point level.

(H–L edge)

Additional function:
Test key on the electronic insert.
Pressing the key breaks the connection to the isolating amplifier.

✎ Note!
In Ex–d applications, the additional function can only be used if the housing is not exposed to an explosive atmosphere.

Connecting to multiplexer:
Set clock time to min. 2 s.

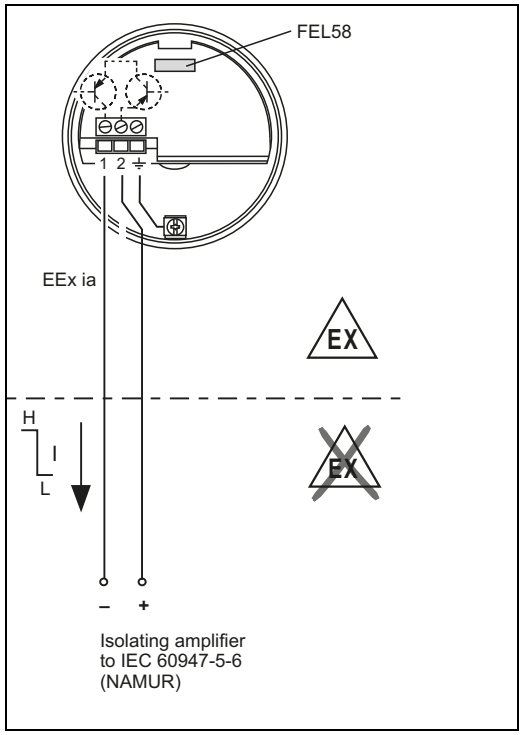

L00-FTL5xxxx-04-05-xx-en-002

Output signal

Safety mode	Level	Output signal	LEDs green	LEDs yellow
MAX		+ 2 → 1: 2.2 … 3.5 mA	☼	☼
		+ 2 → 1: 0.6 … 1.0 mA	◐	●
MIN		+ 2 → 1: 2.2 … 3.5 mA	☼	☼
		+ 2 → 1: 0.6 … 1.0 mA	◐	●

☼ = lit
◐ = flashes
● = unlit

L00-FTL5xxxx-07-05-xx-xx-002

L00-FTL5xxxx-04-05-xx-xx-007

Signal on alarm

Output signal in the event of damaged sensor: < 1.0 mA

Connectable load

- See Technical Data of the isolating amplifier connected according to IEC 60947–5–6 (NAMUR)
- Connection also to isolating amplifiers which have special safety circuits (I > 3.0 mA)

Electronics FEL58 (NAMUR H-L edge, compact housing)

Power supply

Supply voltage: DC 8.2 V ±20 %
Power consumption: < 6 mW at I < 1 mA; < 38 mW at I = 3.5 mA
Connection data interface: IEC 60947-5-6

Electrical connection

Two-wire connection for separate switching unit

For connecting to isolating amplifiers acc. to NAMUR (IEC 60947-5-6), e.g. FTL325N, FTL375N from Endress+Hauser. Output signal jump from high to low current on point level.

(H–L edge)

Additional function:
If the test magnet is held against the
marking on the nameplate,
the output signal is inverted.

Connecting to multiplexer:
Set clock time to min. 3 s.

The NAMUR interface has
a defined power consumption rate.
Thus, it is not possible to use the M12 connector
with an integrated LED
(52018763).

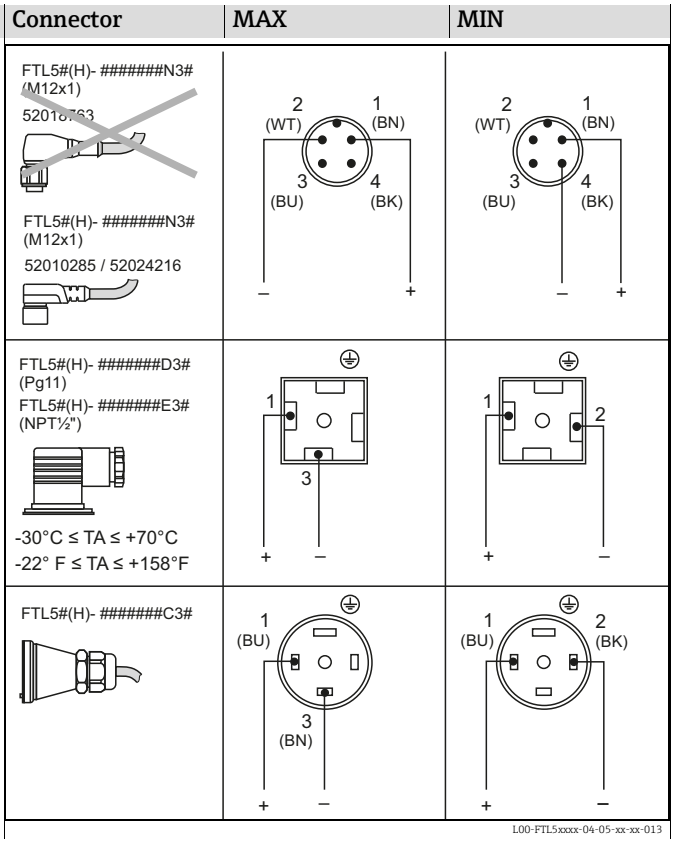

Output signal

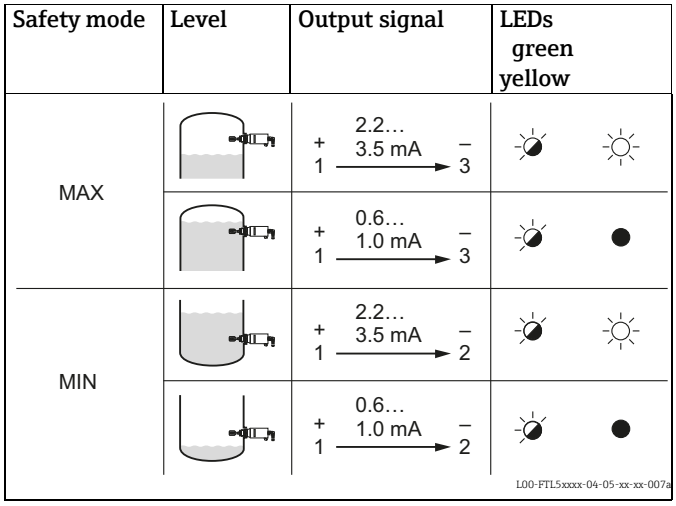

= lit

= flashes

= unlit

L00-FTL5xxxx-07-05-xx-xx-002

Note!
The light emitting diodes are not readable on the version FTL5x(H)-## ## ## #C 3# (compact IP66/68 316L with a 5 m cable).

Signal on alarm

Output signal in the event of damaged sensor: < 1.0 mA

Connectable load

- See Technical Data of the isolating amplifier according to IEC 60947–5–6 (NAMUR)
- Connection also to isolating amplifiers which have special safety circuits (I > 3.0 mA)

Electronic insert FEL57 (PFM)

Power supply

Supply voltage: DC 9.5 to 12.5 V
Current consumption: 10 to 13 mA
Power consumption: < 150 mW
Reverse polarity protection

Electrical connection

Two-wire connection for separate switching unit

For connecting to Endress+Hauser switching units Nivotester FTL320, FTL325P, FTL370, FTL372, FTL375P (also with proof test).

Output signal jump of the PFM signal from high to low frequency when sensor is covered. Switching between minimum/maximum safety in the Nivotester.

Additional function "proof test":
After interruption of the power supply, a test cycle is activated which checks the sensor and electronics without any change in level. Approved for overfill protection acc. to WHG (German Water Resources Act). The following can be switched at the electronic insert:

- **Standard (STD):**
  Corrosion of the fork unlikely;
  simulation approx. 8 s
  tuning fork exposed – covered – exposed.
  For proof testing, the Nivotester tests the sensor's level notification function.
- **Extended (EXT)**:
  Corrosion of the fork possible;
  Simulation approx. 41 s: tuning fork exposed – covered – corroded – exposed.
  For proof testing, the Nivotester tests the sensor's level notification function and fault notification (alarm) function.

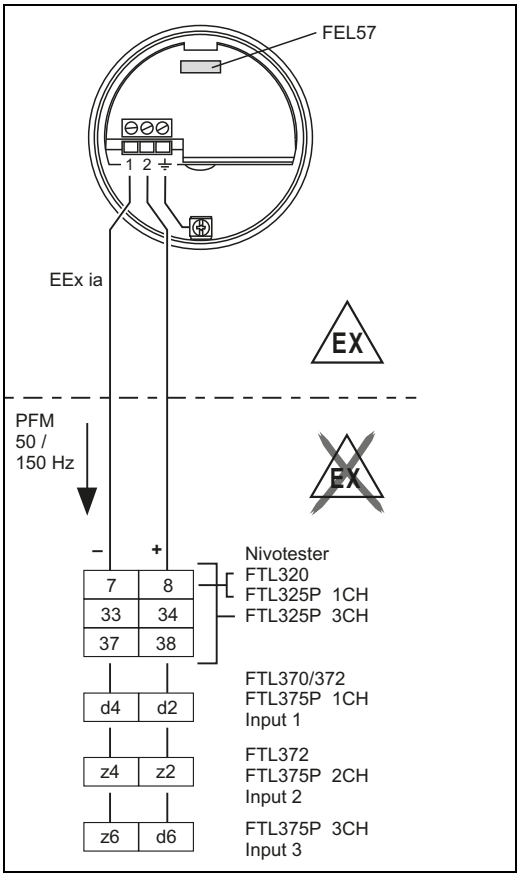

L00-FTL5xxxx-04-05-xx-en-003

The check is activated and monitored at the switching unit.

The twin-core connecting cable (instrument cable) with a cable resistance of ≤ 25 Ω per core is connected to the screw terminals (conductor cross-sections 0.5 to 2.5 mm / 0.02 to 0.1 in) in the connection compartment. Protective circuits against reverse polarity, HF influences and overvoltage peaks are installed.
Maximum cable length up to 1000 m (3281 ft).

A shielded connecting cable is recommended in the event of strong electromagnetic interference. Here the shielding must be connected to the sensor and the power supply.

Switching behavior of the connected device:

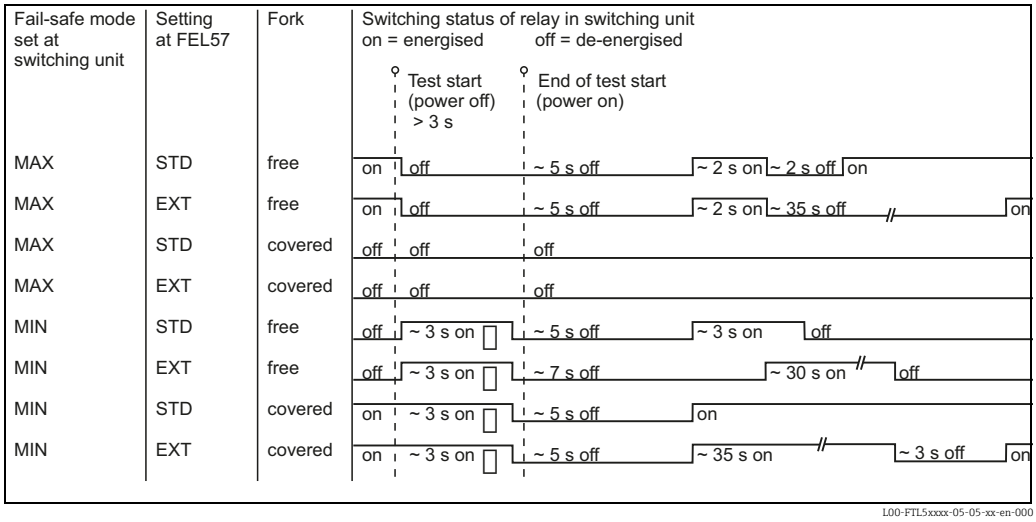

* De-energized on power supply failure

Please note this switching response and function of the plant especially when replacing a Liquiphant incorporating electronic insert EL17Z or FEL37 with a Liquiphant M incorporating electronic insert FEL57.

Output signal

= lit

= unlit

L00-FTL2xxxx-07-05-xx-xx-000

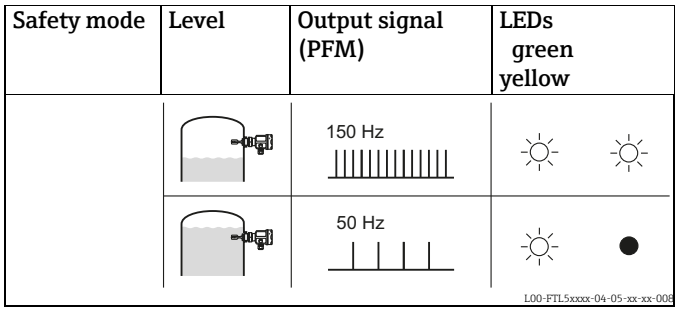

Signal on alarm

Output signal on power failure or in the event of damaged sensor: 0 Hz

Connectable load

- Floating relay contacts in the connected switching unit Nivotester FTL325P, FTL375P
- For contact load, see the Technical Data of the switching unit.

Electronic insert FEL50A (PROFIBUS PA)

Power supply

Bus voltage: DC 9 to 32 V
Bus current:
- 12.5 mA +/− 1.0 mA (software version: 01.03.00, hardware version: 02.00)
- 10.5 mA +/− 1.0 mA (software version: 01.03.00, hardware version: 01.00)

Electrical connection

Two-wire connection for power supply and data transfer

For connecting to PROFIBUS PA

Additional functions:

– Digital communication enables the representation, reading and editing of the following parameters: Fork frequency, switch-on frequency, switch-off frequency, switch-on time and switch-off time, status, measured value, density switch.

– Matrix locking possible
– Switch to WHG mode possible (WHG approval)
– For a detailed description, see BA00198F

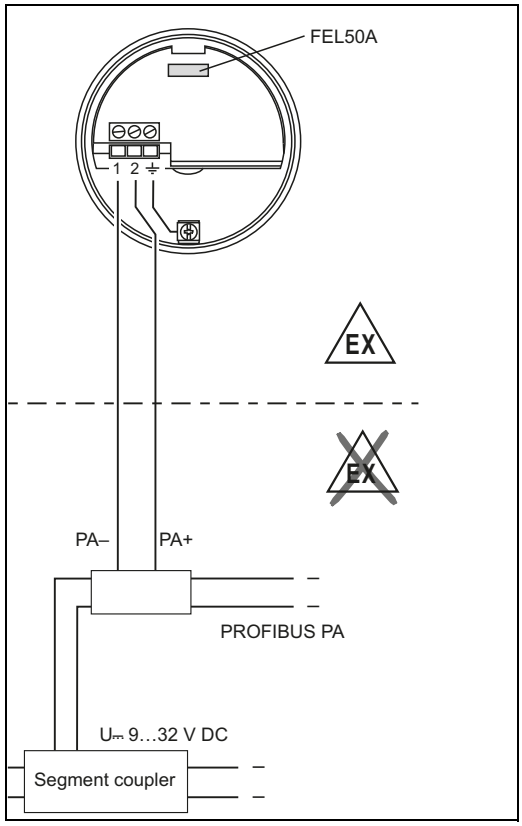

L00-FTL5xxxx-04-05-xx-en-005

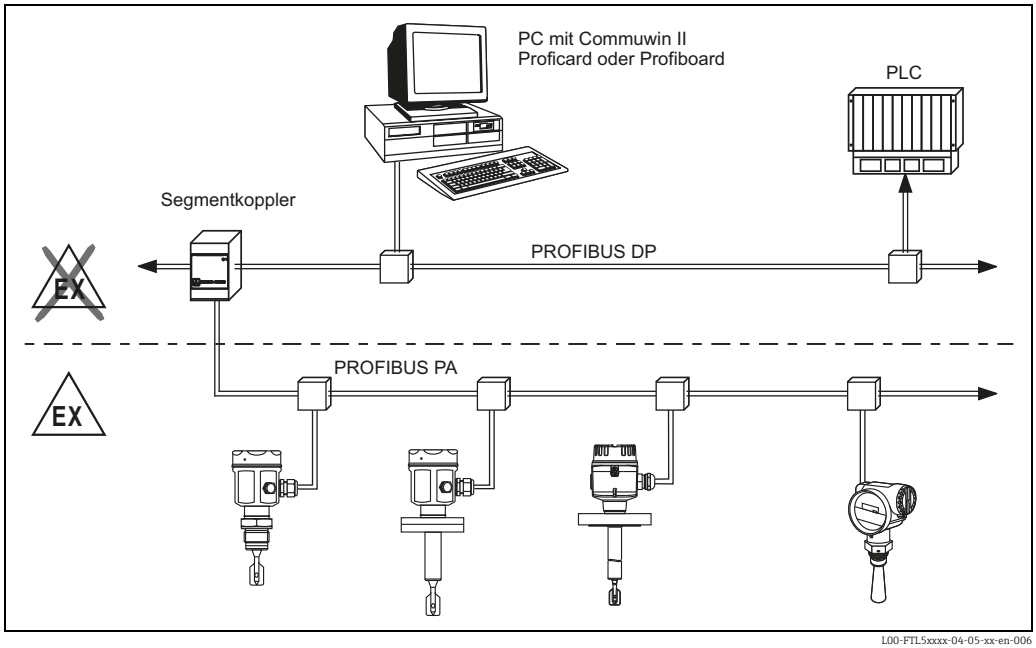

L00-FTL5xxxx-04-05-xx-en-006

Output signal

☼ = lit

● = unlit

L00-FTL2xxxx-07-05-xx-xx-000

Setting	Level	LEDs green	LEDs yellow	FEL50A
not inverted	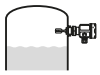	☼	●	OUT_D = 0 PA bus signal
	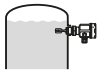	☼	☼	OUT_D = 1 PA bus signal
inverted	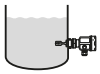	☼	☼	OUT_D = 0 PA bus signal
	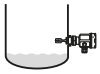	☼	●	OUT_D = 1 PA bus signal

L00-FTL5xxxx-04-05-xx-xx-009

Signal on alarm

Failure information can be opened using the following interfaces:
Yellow LED flashing, status code, diagnostic code; see BA00198F

Electronic insert FEL50D (density)

Power supply

Frequency range: 300 to 1500 Hz
Signal level: 4 mA
Pulse height: 16 mA
Pulse width: 20 µS

Electrical connection

Two-wire connection at Density Computer FML621
For connecting to the density and concentration computer FML621.

The output signal is based on pulse technology.
With the aid of this signal, the fork frequency is constantly forwarded to the switching unit.

Caution!
Operation with other switching units,
such as FTL325P, is not permitted.

This electronic insert cannot be installed in devices that were

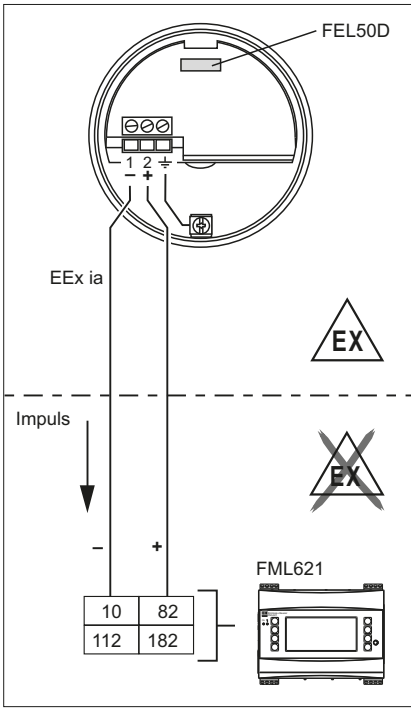

TI420Fen004

Signal on alarm

Output signal on power failure or in the event of damaged sensor: 0 Hz

Adjustment

In the Liquiphant M modular system, the option of an adjustment is also provided in addition to the electronics
(see feature 60: "Accessories").

There are three types of adjustment:

Standard adjustment (see ordering information for additional option, basic version A)
- Here, two fork parameters are determined to describe the sensor characteristics, indicated in the adjustment report and provided with the product.
  These parameters must be transmitted to the Density Computer FML621.

Special adjustment (see ordering information for additional option, special adjustment, density H_2O (K) or special adjustment, density H_2O with 3.1 certificate (L))
- Here, three fork parameters are determined to describe the sensor characteristics, indicated in the adjustment report and provided with the product.
  These parameters must be transmitted to the Density Computer FML621.
  Greater accuracy is achieved with this type of adjustment (see also "Performance characteristics").

Field Adjustment
- During field adjustment, a density value actually determined by the customer is entered and the system is automatically adjusted to this value (wet adjustment).

Note!
More information on Liquiphant M Density is available in Technical Information TI00420F. This can be downloaded from www.endress.com => Download.

Operating principle

Measuring the density of a liquid medium in pipes and tanks. Also suitable for use in hazardous areas, and preferably for applications in the chemical and food industry.

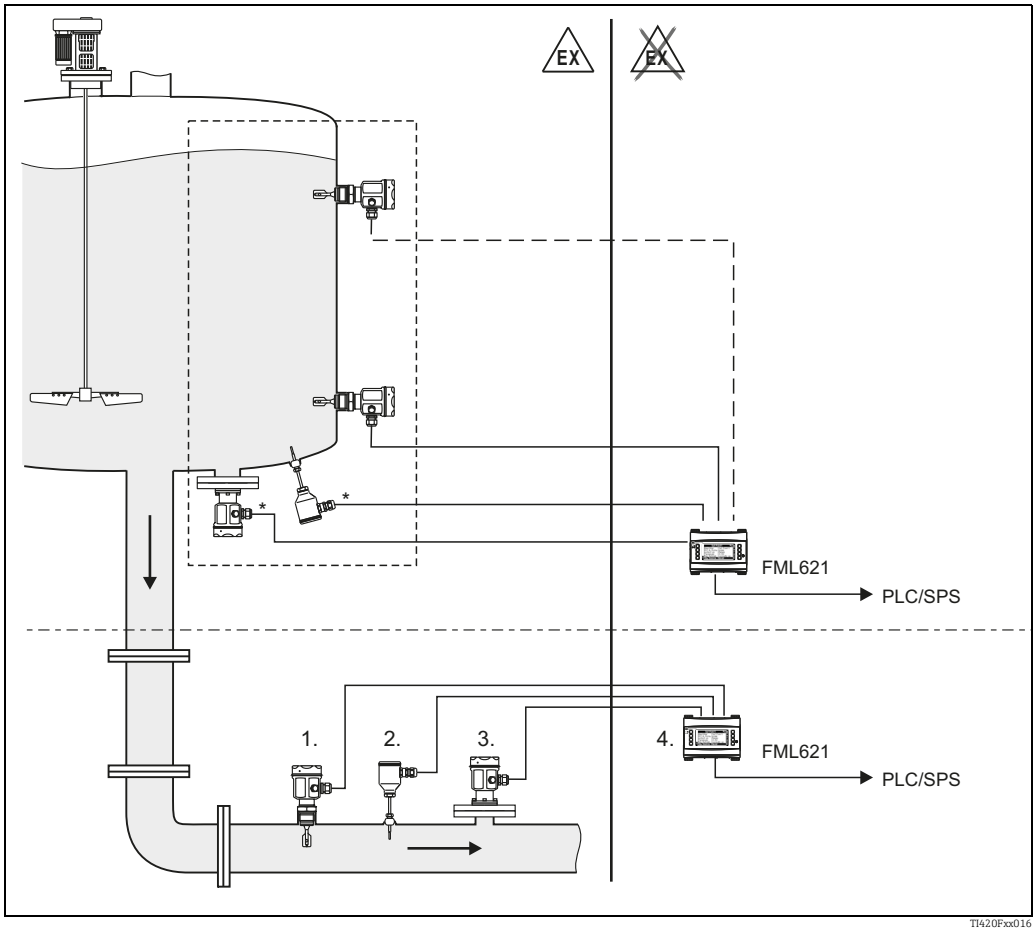

** Pressure and temperature information required depending on the application.*
1. Liquiphant M sensor with electronic insert FEL50D (pulse output);
2. Temperature sensor (e.g. 4 to 20 mA output);
3. Pressure transmitter (4 to 20 mA output);
4. Liquiphant density and concentration computer FML621 with display and operating unit

Light signals

LED	Symbol	Information
Yellow		Measurement valid
		Unstable process situation
		Maintenance required
Green		Power on
		Power off
Red		No fault
		Maintenance required
		Device failure

Connection and function

Connecting cables

- Electronic inserts: cross-section ≤ 2.5 mm^2 (14 AWG); strand in ferrule as per DIN 46228
- Protective ground in housing: cross-section ≤ 2.5 mm^2 (14 AWG)
- External equipotential bonding connection on housing: cross-section ≤ 4 mm^2 (12 AWG)

Safety mode

Minimum/maximum residual current safety selectable on electronic insert.
(with FEL57 on Nivotester only)

MAX = maximum safety:
The output switches to the power fail response when the fork is covered
For use with overfill protection for example

MIN = minimum safety:
The output switches to the power fail response when the fork is exposed
For use with dry running protection for example

Switching time

When fork is covered: approx. 0.5 s
When fork is exposed: approx. 1.0 s
Additionally configurable for PROFIBUS PA:
0.5-60 s

Other switching times available on request.

Switch-on behavior

When switching on the power supply, the output assumes the alarm signal.
After ≤ 3 s it assumes the correct switching mode (exception: FEL57)

Performance characteristics

Reference operating conditions

Ambient temperature: 23 °C (73 °F)

Medium temperature: 23 °C (73 °F)

Medium density (water): 1 g/cm^3 (SGU)

Medium viscosity: 1 mm^2/s (cSt)

Medium pressure p_e: 0 bar (0 psi)

Sensor mounting: vertical from above

Density switch: to > 0.7 g/cm^3 (SGU)

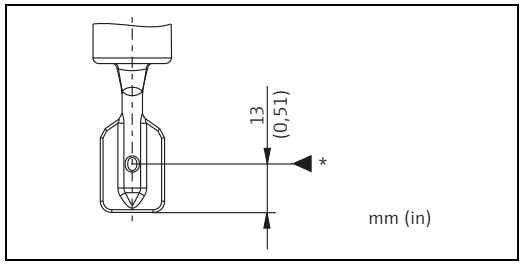

L00-FTL5xxxx-06-05-xx-xx-031

** Switch point under reference operating conditions*

Maximum measured error

Under reference operating conditions: max. +/−1 mm (0.04 in)

Repeatability

0.1 mm (0.004 in)

Hysteresis

approx. 2 mm (0.08 in)

Influence of medium temperature

max. +1.8 to −2.8 mm (−50 to +150 °C / -58 to 302 °F)

Influence of medium density

max. +4.8 to −3.5 mm ((0.5 to 1.5 g/cm^3 (SGU))
max. +0.19 to -0.14 in

Influence of medium pressure

max. 0 to −2.5 mm (−1 to 64 bar (-14.5 to 928 psi))
max. 0 to -0.1 in

Switching delay

- When fork is covered: 0.5 s
- When fork is exposed: 1.0 s
- Available on request: 0.2 s; 1.5 s or 5 s (when the tuning fork is covered or exposed)

Operating conditions

Installation

Installation instructions

Switch points ⅊ on the sensor depend on the mounting position, with reference to water, Density 1 g/cm³ (SGU), 23 °C (73 °F), p_e 0 bar (0 psi).

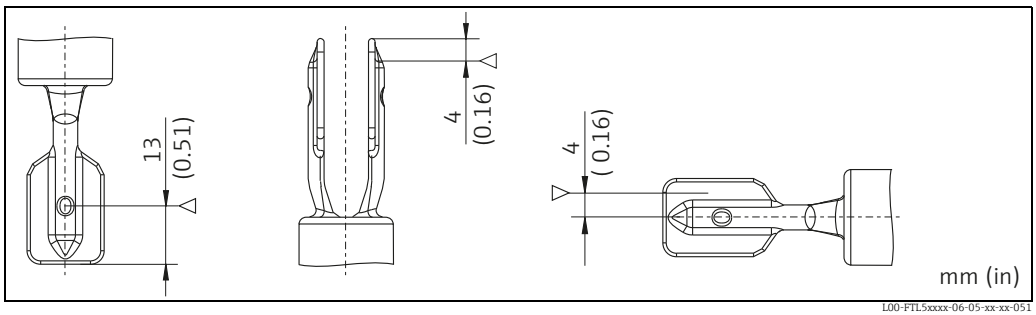

Mounting from above *Mounting from below* *Mounting from the side*

Note!
- The switch points of the Liquiphant **M** are at other positions to those of the previous version Liquiphant **II**.
- Minimum distance between the tip of the fork and the tank wall or pipe wall: 10 mm

Examples of mounting

Examples of mounting with regard to the viscosity ν of the liquid and the tendency to form buildup

Optimum mounting, without problem even with high viscosity:

Position the fork so that the narrow edge of the tines is vertical to ensure that the liquid can run off easily.

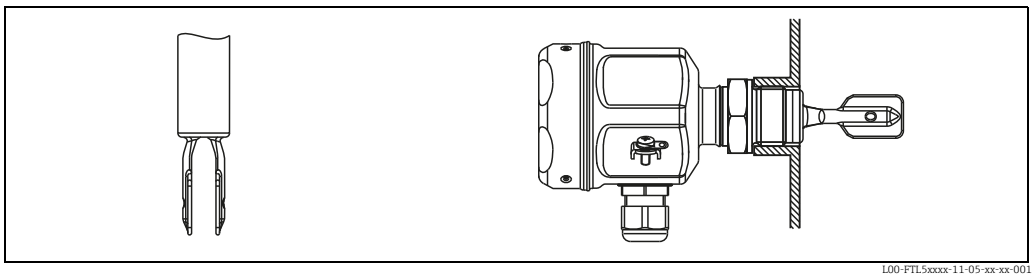

Vertical from above *Flush-mounted from the side*

With buildup on the tank walls:

* Ensure that there is sufficient distance between the buildup expected on the tank wall and the fork.

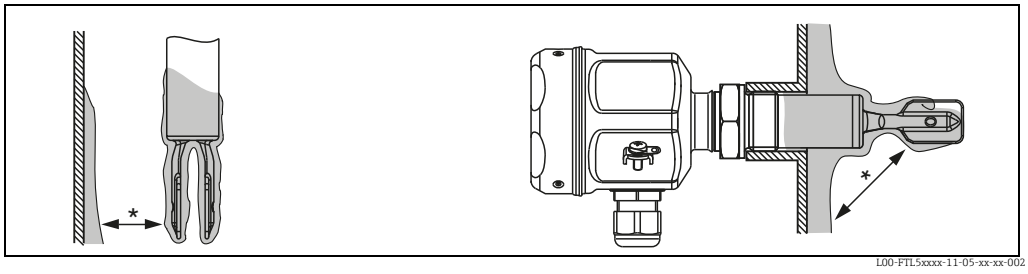

Vertical from above *Protruding into the tank from the side*

Mounting positions in the case of low viscosity up to 2000 mm²/s (cSt):

* Deburr the nozzle surfaces

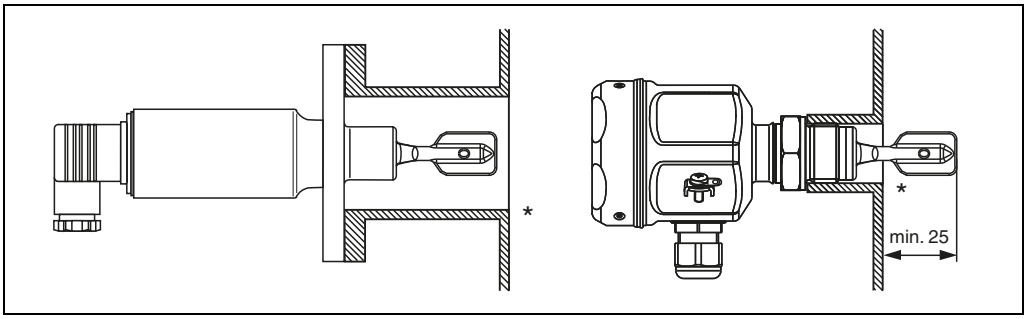

L00-FTL5xxxx-11-05-xx-en-003

Mounting in piping from 2"

Flow velocities up to 5 m/s for viscosity of 1 mm²/s (cSt) and density 1 g/cm³ (SGU).
(Check the function for other medium conditions.)

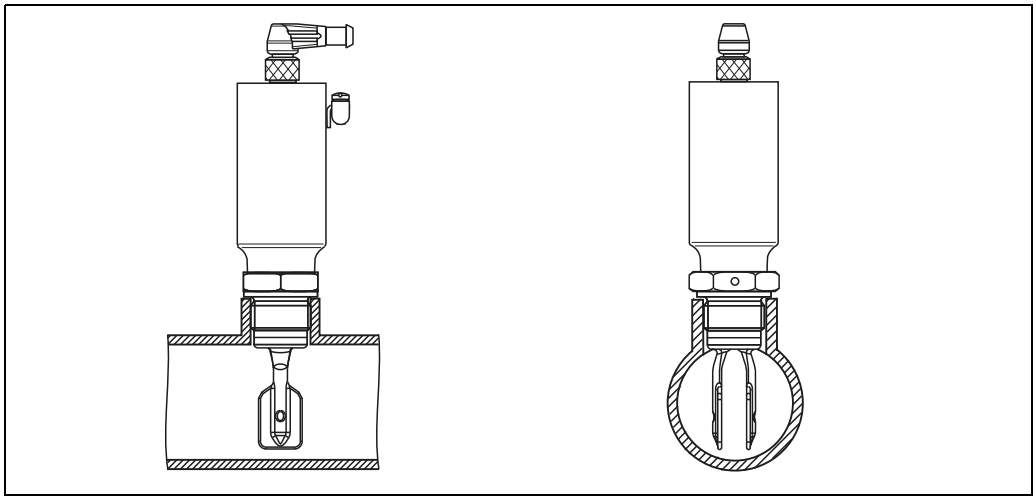

L00-FTL5xxxx-11-05-xx-xx-004

Dynamic load

Support the Liquiphant M FTL51(H) in the event of a severe dynamic load.

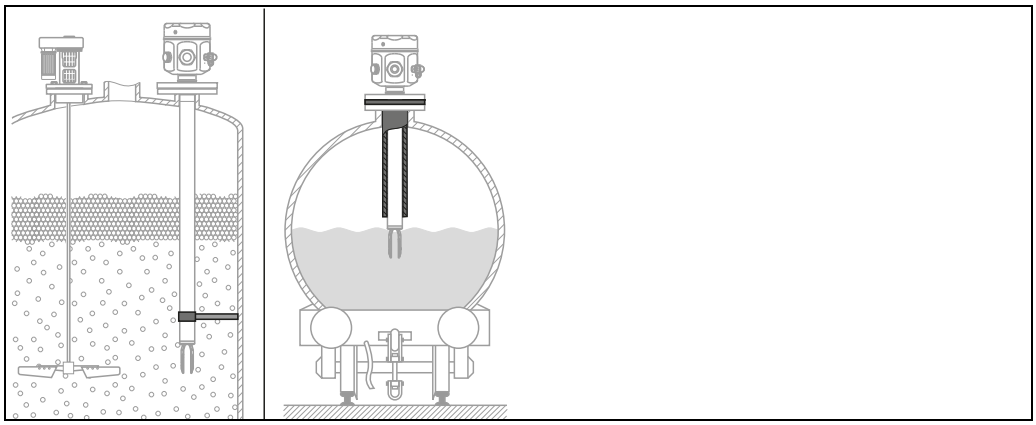

L00-FTL5xxxx-11-05-xx-xx-005

Ensure adequate space outside the tank for mounting, connection and configuration.

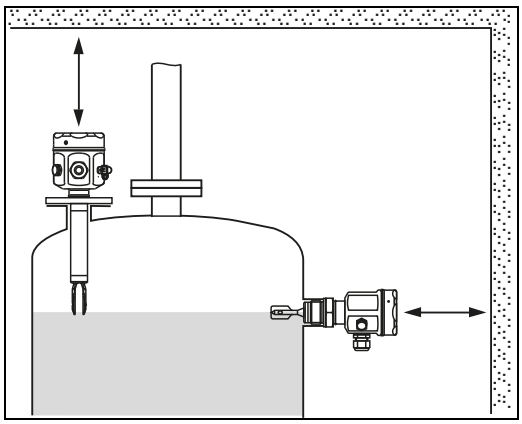

L00-FTL5xxxx-11-05-xx-xx-006

Orientation

- FTL50(H) and FTL51(H) with short pipe up to approx. 500 mm (19.7 in): any position
- FTL51(H) with long pipe: vertical

Environment

Ambient temperature range

Permitted ambient temperature T_a at the housing depending on the medium temperature T_p in the tank:

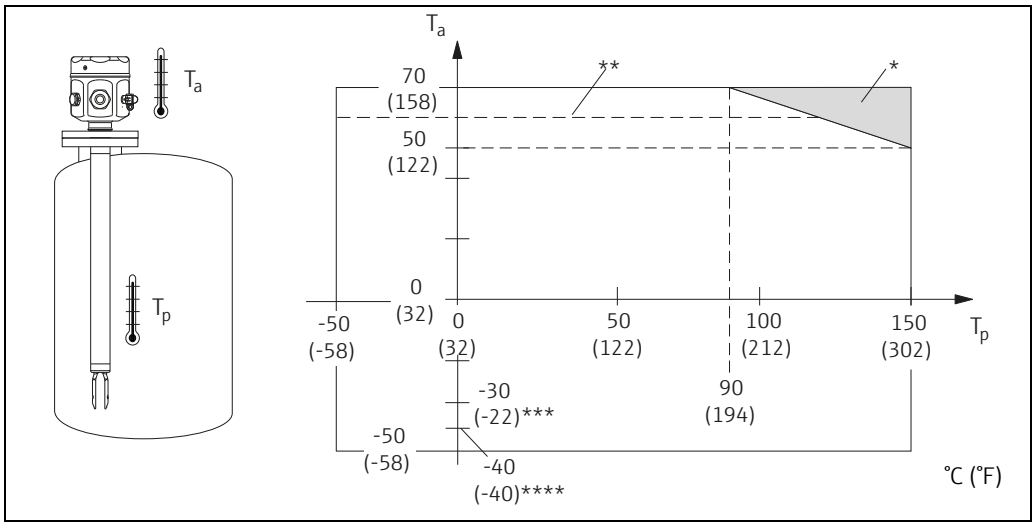

L00-FTL5xxxx-05-05-xx-xx-001

* Additional temperature range for devices with a temperature spacer or pressure-tight feedthrough.

** Maximum ambient temperature with FEL50D/FEL50A in hazardous areas.

*** The following applies for devices with a compact housing according to version D3, E3: -30 °C ≤ Ta ≤ +70 °C

**** The following applies for the F16 housing: -40 °C ≤ Ta ≤ +70 °C

Storage temperature

−50 to +80 °C (-58 to 176 °F)

Installation height as per IEC61010-1 Ed.3

Up to 2000 m (6600 ft) above sea level.

Can be extended up to 3000 m (9800 ft) above sea level if overvoltage protection is used, for example HAW562 or HAW569.

Climate class

Climate protection to IEC 68, Part 2-38,
Fig. 2a

Degree of protection

Types of housing	IP65	IP66*	IP67*	IP68*	IP69	NEMA type**
Compact housing with valve connector Pg11/NPT ½	X	–	–	–	–	–
Compact housing with 5 m (16 ft) cable tail	–	X	–	X	–	–
Compact housing with M12x1 connector (52010285) 316L (metal)	–	X	–	X	–	–
Compact housing with elbowed connector (52024216) / L= 5 m (16 ft), without integrated LEDs	–	X	–	X	X	–
Compact housing with elbowed connector (52018763) / L= 5 m (16 ft), with integrated LEDs	–	X	–	X	X	–
Polyester housing F16	–	X	X	–	–	4X
Stainless steel housing F15	–	X	X	–	–	4X
Aluminum housing F17	–	X	X	–	–	4X
Aluminum housing F13****	–	X	–	X***	–	4X/6P
Stainless steel housing F27	–	X	–	X	–	4X/6P
Aluminum housing T13 with separate connection compartment (Ex d)	–	X	–	X***	–	4X/6P

* As per EN60529
** As per NEMA 250
*** only with M20 cable entry or G1/2 thread
**** F13 housing only in conjunction with XP or Ex d approval

Vibration resistance

As per IEC 68, parts 2-6 (10 to 55 Hz, 0.15 mm (0.01 in), 100 cycles)
In the event of increased vibrations, the following additional option is recommended: feature "060" version "P" 100 bar (1450 psi) process pressure.

Electromagnetic compatibility

Interference emission to EN 61326, Electrical Equipment Class B
Interference immunity to EN 61326; Annex A (Industrial) and NAMUR Recommendation NE 21 (EMC)

Medium conditions

Medium temperature	−50 to +150 °C (-58 to 302 °F); for exceptions, see "Process connections"
Thermal shock	≤ 120 °C/s (248 °F/s)
Medium pressure p_e	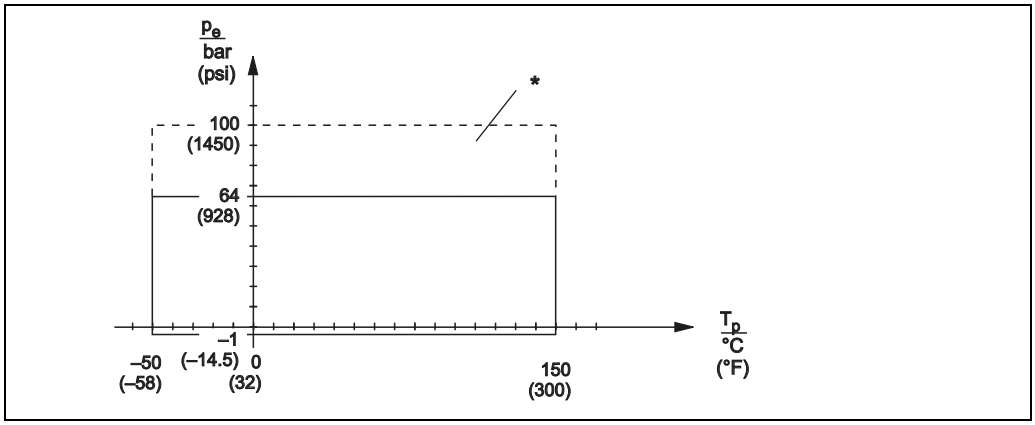 L00-FTL5xxxx-05-05-xx-xx-003 * Permitted pressure rating when the "100 bar (1450 psi)" option is selected (see "Product structure FTL51", feature 060, from → 📄 44). See "Process connections" → 📄 33 for exceptions. Canadian CRN approval: Details about the maximum pressure values are available in the download area at "www.endress.com/download". Please refer to the standards listed for the permitted pressure values of the flanges at higher temperatures: ▪ pR EN 1092-1: 2005 With regard to their stability-temperature property, the materials 1.4435 and 1.4404 are identical and are grouped together in EN 1092-1 Tab. 18 under 13E0. The chemical composition of the two materials can be identical. ▪ ASME B 16.5 - 2013 Tab. 2-2.2 F316 ▪ ASME B 16.5 - 2013 Tab. 2-3.8 N10276 ▪ JIS B 2220 The lowest value from the derating curves of the device and selected flange applies in each case.
Test pressure	p_e = 64 bar (928 psi): ▪ ≤ 100 bar (1450 psi) or 1.5 times the medium pressure p_e ▪ Sensor burst pressure at 200 bar (2900 psi) p_e = 100 bar (1450 psi): ▪ ≤ 150 bar (2175 psi) or 1.5 times the medium pressure p_e) ▪ Sensor burst pressure at 400 bar (5800 psi) Note! The device function is restricted during pressure testing.
State of aggregation	Liquid
Density	0.7 g/cm^3 (SGU) = delivery status 0.5 g/cm^3* (SGU) can be adjusted via switches * Density settings for the compact housing on request
Viscosity	≤ 10,000 mm^2/s (cSt)
Solids content	≤ ø5 mm (0.2 in)
Lateral loading capacity	≤ 75 Nm

Mechanical construction

Note!
2D and 3D drawings containing individual dimensions can be generated and downloaded in the Configurator on the product pages of the Liquiphant FTL5x at www.endress.com.

Design

Summary of all electrical and mechanical versions

Housing

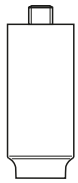

L00-FTL5xxxx-03-05-xx-xx-019

Compact
Pipe housing (316L)

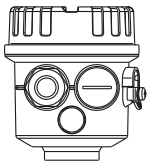

L00-FTL5xxxx-03-05-xx-xx-001

F16
Polyester (PBT)

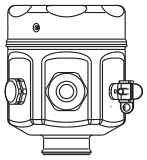

L00-FTL5xxxx-03-05-xx-xx-002

F15
Stainless steel (316L)

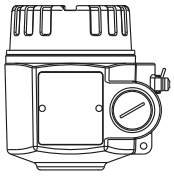

L00-FTL5xxxx-03-05-xx-xx-031

F17
Aluminum
Housing coated

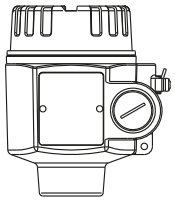

L00-FTL5xxxx-03-05-xx-xx-033

F27
Stainless steel (316L)
F13
Aluminum
(also for Ex d/XP), housing coated

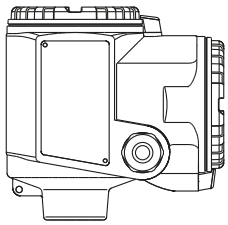

L00-FTL5xxxx-03-05-xx-xx-004

T13
Aluminum with separate connection compartment (also Ex de and Ex d), housing coated

Plug-in electronic inserts to mount in the housing

L00-FTL5xxxx-03-05-xx-xx-000

FEL51*:	Two-wire AC connection
FEL52*:	Three-wire DC connection PNP
FEL54:	Universal current connection, 2 relay outputs
FEL55:	Output 16/8 mA for separate switching unit
FEL56:	Output 0.6 to 1.0 / 2.2 to 2.8 mA for separate switching unit (NAMUR)
FEL58*:	Output 2.2 to 3.5 / 0.6 to 1.0 mA for separate switching unit (NAMUR)
FEL57:	Output 150/50 Hz, PFM, for separate switching unit (Nivotester)
FEL50A:	Digital communication PROFIBUS PA
FEL50D:	Pulse output for Density Computer FML621

* Electronics also available as compact housing. The electronics cannot be exchanged!
If the housing is ordered with a cable gland: the cable gland is ready-mounted upon delivery. A second cable gland is included in conjunction with FEL54.

Temperature spacer and pressure-tight feedthrough

Temperature spacer (optional)
Provides sealed insulation for the vessel and normal ambient temperatures for the housing.

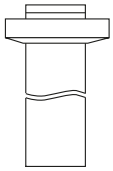

L00-FTL7xxxx-03-05-xx-xx-002

Pressure-tight feedthrough (optional)
Protects the housing from pressures up to 100 bar (1450 psi) if the sensor is damaged. Provides sealed insulation for the vessel and normal ambient temperatures for the housing.

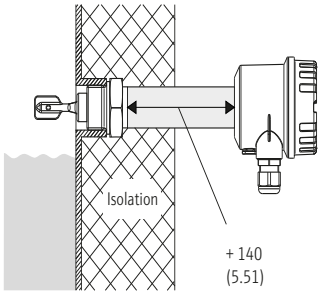

L00-FTL5xxxx-06-05-xx-xx-091

Process connections

L00-FTL5xxxx-03-05-xx-xx-006

G ¾, DIN ISO 228/I
R ¾, EN10226
NPT ¾, ASME B 1.20.1
(AF 32)

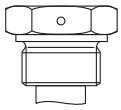

L00-FTL5xxxx-03-05-xx-xx-007

G 1, DIN ISO 228/I
R 1, EN10226
NPT 1, ASME B 1.20.1
(AF 41)

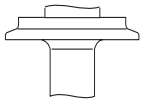

L00-FTL5xxxx-03-05-xx-xx-008

Diverse
hygienic and
aseptic
connections

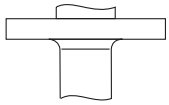

L00-FTL5xxxx-03-05-xx-xx-009

Flanges as per DIN,
ASME,
JIS
from DN 25 / 1"

Sensors

Compact, with extension pipe up to 3 m (up to 6 m on request) or special "length L II" (see → 🗎 33ff.)	Compact	Length L	Length L II
	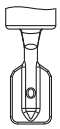	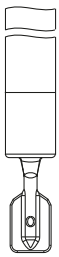	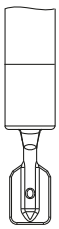
		L00-FTL5xxxx-03-05-xx-xx-018	
p_e = bar/psi	64/928	64/928 100/1450	64/928 100/1450

Dimensions

Dimensions in mm (in)!

Housing FTL50(H), FTL51(H) with sensor FTL50(H)

Compact housing, primarily for hygiene applications

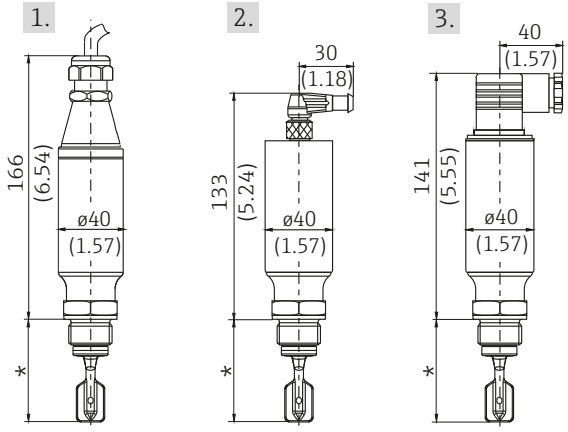

L00-FTL5xxxx-06-05-xx-xx-085

1. 5 m cable
2. M12 connector
3. Pg11/NPT ½ connector

Polyester housing F16

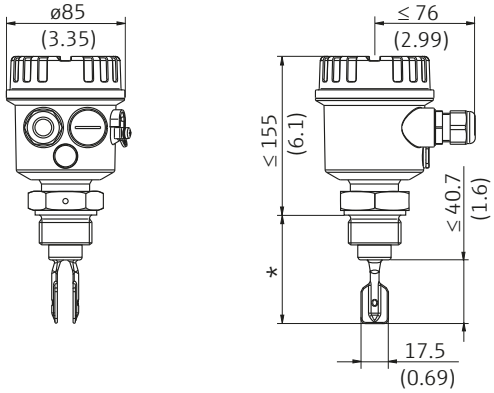

L00-FTL5xxxx-06-05-xx-xx-086

F15 stainless steel housing primarily for hygiene applications

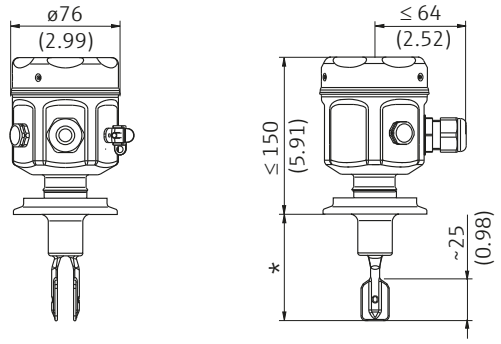

L00-FTL5xxxx-06-05-xx-xx-087

Aluminum housing F17

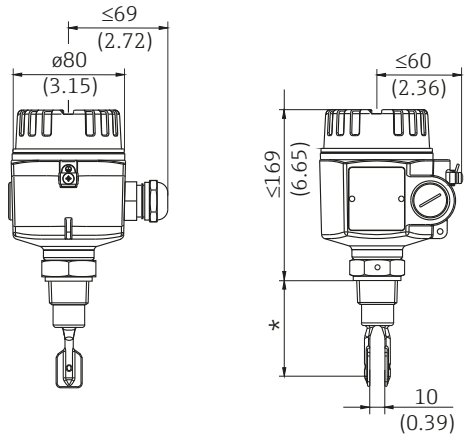

L00-FTL5xxxx-06-05-xx-xx-088

Stainless steel housing (316L) F27
Aluminum housing F13

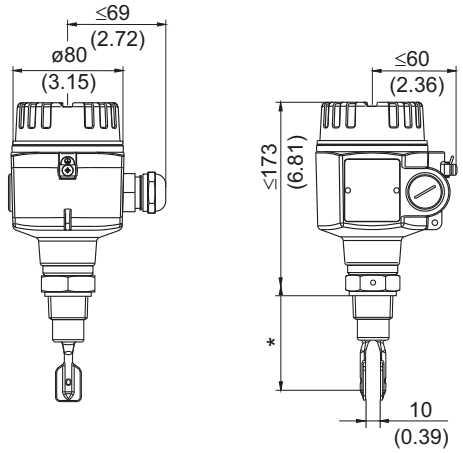

L00-FTL5xxxx-06-05-xx-xx-089

Aluminum housing T13
with separate connection compartment

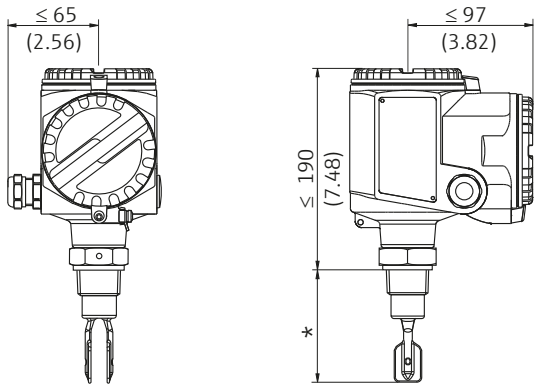

L00-FTL5xxxx-06-05-xx-xx-090

* See "Process connections"

Note!
The switch points of the Liquiphant **M** are at other positions to those of the previous version Liquiphant **II**.

Process connections for FTL50(H) and FTL51(H)

Process connection		Dimensions	Accessories	Pressure Temperature
G ¾ DIN ISO 228/1 with defined thread start; Flat seal to DIN 7603: supplied	GQ2 GQ6	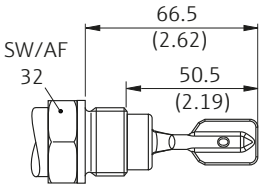 L00-FTL5xxxx-06-05-xx-xx-092		≤ 100 bar / only FTL51 (≤ 1450 psi) ≤ 150 °C (302 °F)
G ¾ DIN ISO 228/1 with defined thread start for flush-mounted installation in weld-in adapter	GQ2 GQ6	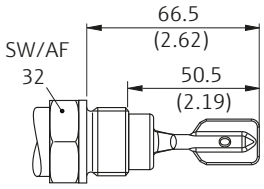 L00-FTL5xxxx-06-05-xx-xx-093	**Weld-in adapter** (with defined thread start) with silicone O- ring only FTL50, FTL50H See "Accessories" In conformity with FDA*	≤ 25 bar (363 psi) ≤ 150 °C (302 °F) ≤ 40 bar (580 psi) ≤ 100 °C (212 °F)
G 1 DIN ISO 228/1 Flat seal to DIN 7603: supplied	GR2 GR6	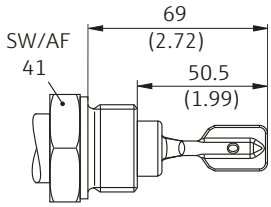 L00-FTL5xxxx-06-05-xx-xx-094		≤ 100 bar / only FTL51 (1450 psi) ≤ 150 °C (302 °F)
G 1 DIN ISO 228/1 with defined thread start With seal surface for flush-mounted installation in weld-in adapter	GW2	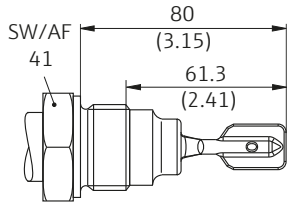 L00-FTL5xxxx-06-05-xx--095	**Weld-in adapter** (with defined thread start) with silicone O- ring See "Accessories" In conformity with FDA*	≤ 25 bar (363 psi) ≤ 150 °C (302 °F) ≤ 40 bar (580 psi) ≤ 100 °C (212 °F)
NPT ¾ ASME B 1.20.1 or **R ¾** DIN/EN 10226	GM2 GM6 GE2 GE6	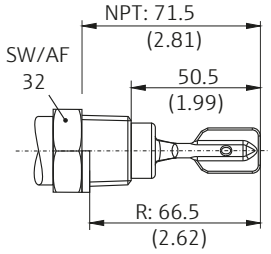 L00-FTL5xxxx-06-05-xx-xx-096		≤ 100 bar / only FTL51 (1450 psi) ≤ 150 °C (302 °F)
NPT1 ASME B 1.20.1 or **R 1** DIN/EN 10226	GN2 GN6 GF2 GF6	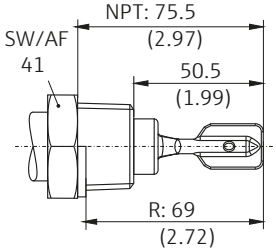 L00-FTL5xxxx-06-05-xx-xx-097		≤ 100 bar / only FTL51 (1450 psi) ≤ 150 °C (302 °F)
* FDA-compliant material in accordance with 21 CFR Part 177.2600 (silicone)				

Process connection		Dimensions	Accessories	Pressure Temperature
Flanges ASME B 16.5 EN 1092-1 (DIN 2527 B) JIS B2220	A## B## C## F## N## K##	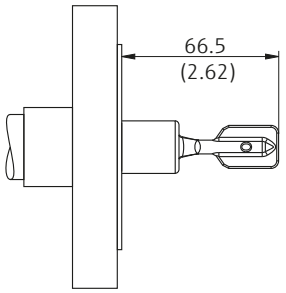	Seal depending on design installed on site	See nominal pressure of flange, however ≤ 100 bar (1450 psi) (only FTL51) ≤ 150 °C (302 °F)
	For higher chemical-resistance, AlloyC22-plated flanges are available. The flange carrier material is made of 316L and is welded with a 2 to 3 mm (0.08 to 0.12 in) thick AlloyC22 disk.			
Tri-Clamp ISO 2852 DN25-38 (1 to 1 ½") DIN 32676 DN25-40 ø D = 50.5 mm (1.99 in) ISO 2852 DN40-51 (2") DIN 32676 DN50 ø D = 64.0 mm (2.52 in)	TC2 TE2	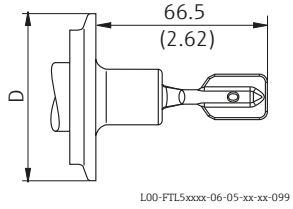	Clamping ring and front seal installed on site**	≤ 25 bar (363 psi) ≤ 150 °C (302 °F)
	TE2: Mounting with NA connector only in conjunction with housing T13, F13 and compact housing. TC2: Mounting with NA connector only in conjunction with compact housing.			
Tri-Clamp NA Connect only for FTL50H, FTL51H ISO 2852 DN25-38 (1 to 1 ½") DIN 32676 DN25-40 ø D = 50.5 mm (1.99 in) ISO 2852 DN40-51 (2") DIN 32676 DN50 ø D = 64.0 mm (2.52 in)	TD2 TF2	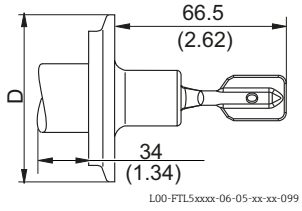	Clamping ring and front seal installed on site**	≤ 25 bar (363 psi) ≤ 150 °C (302 °F)
	TD2, TF2: Mounting with NA connector only in conjunction with housing F15, F16 and F17.			
Threaded pipe joint DN 32 DN 40 DN 50 DIN 11851 with thread adapter nut	MA2 MC2 ME2	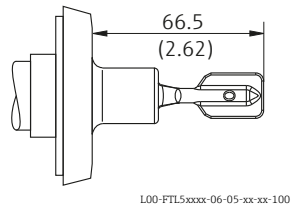	Sealing ring with collar, installed on site**	DN 32, DN 40: ≤ 40 bar (580 psi) up to 100 °C (212 °F) ≤ 25 bar (363 psi) up to 140 °C (284 °F) DN 50: ≤ 25 bar (363 psi) ≤ 140 °C (284 °F)
Flush-mounted for weld-in adapter Factory standard Endress+Hauser with silicone seal and thread adapter nut: supplied	EE2	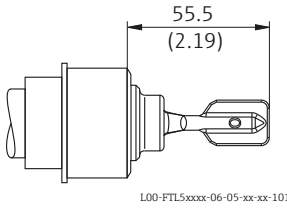	**Weld-in adapter** (fork can be positioned) See "Accessories" In conformity with FDA*	≤ 40 bar (580 psi) ≤ 100 °C (212 °F) ≤ 25 bar (363 psi) ≤ 150 °C (302 °F)

Process connection		Dimensions	Accessories	Pressure Temperature
Aseptic DN 50 DIN 11864-1 Form A for pipe DIN 11850 with thread adapter nut	HE2	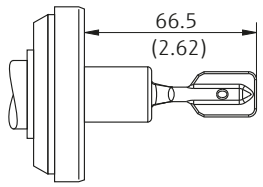 L00-FTL5xxxx-06-05-xx-xx-102	sealing ring installed on site**	≤ 25 bar (363 psi) ≤ 140 °C (284 °F)
DRD With clamped flange	PE2	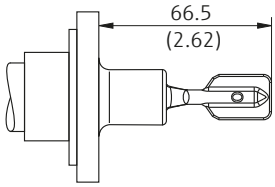 L00-FTL5xxxx-06-05-xx-xx-103	Welding flange with PTFE flat seal (fork can be positioned) See "Accessories" (or installed on site)** In conformity with FDA*	≤ 40 bar (580 psi) ≤ 100 °C (212 °F) ≤ 25 bar (363 psi) ≤ 150 °C (302 °F)
* FDA-compliant material in accordance with 21 CFR Part 177/2600 (silicone), 21 CFR Part 177.1550 (PTFE) ** The maximum temperature and the maximum pressure are dependent on the clamping ring used and the seal used. The lowest value applies in each case.				
SMS 2" (DN 51) with thread adapter nut	UE2	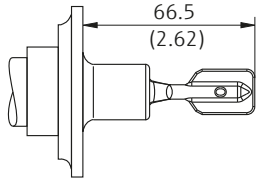 L00-FTL5xxxx-06-05-xx-xx-104	sealing ring installed on site**	≤ 25 bar (363 psi) ≤ 140 °C (284 °F)
Varivent for piping ≥ DN 65 ≥ O.D. 3" ≥ I.P.S. 3"	WE2	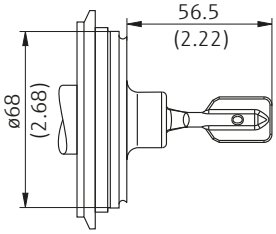 L00-FTL5xxxx-06-05-xx-xx-105	Clamping ring and O-ring seal, installed on site**	However, see specification as per Tuchenhagen VARIVENT-Inline housing: ≤ 25 bar (363 psi) ≤ 150 °C (302 °F)
Ingold fitting DN 25 Fitting length 46 mm (2.52 in) Thread adapter nut G 1 ¼ with O-ring seal, EPDM (FDA-compliant, USP Class VI*)	TT2	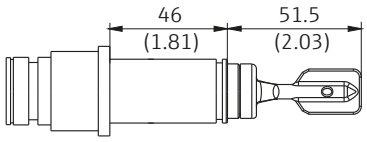 L00-FTL5xxxx-06-05-xx-xx-106		≤ 16 bar (232 psi) ≤ 150 °C (302 °F)
* FDA-compliant material in accordance with 21 CFR Part 177/2600 (EPDM) ** The maximum temperature and the maximum pressure are dependent on the clamping ring used and the seal used. The lowest value applies in each case.				

Sensor length L for FTL51 and FTL51H, depending on process connection

Thread: G ¾ G 1	Thread: NPT ¾ NPT1 R ¾ R 1	Flanges and flange-like process connections
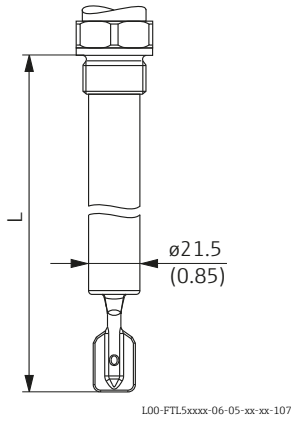	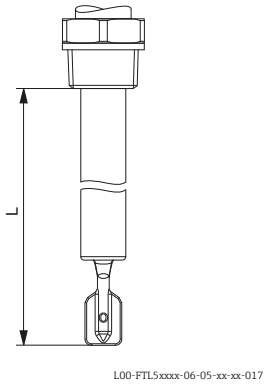	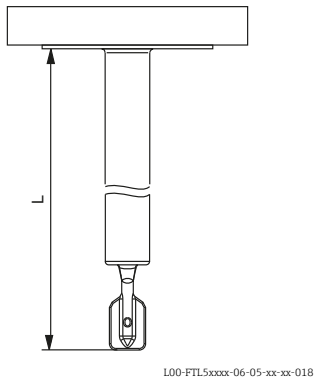
From seal surface of thread adapter	From lower edge of thread	

Customized length L:
- 117 mm to 3000 mm (4,6 to 115 in); special version (TSP) on request up to 6000 mm (235 in)
- Length tolerances L: < 1 m (−5 mm), 1 to 3 m (−10 mm) / < 3.3 ft (-0.2 in), 3.3 to 9.8 ft (-0.39 in)

Note!
The switch points of Liquiphant **M** are at other positions to those of the previous version Liquiphant **II**.
Special length "L II":
With vertical mounting from above approximately the same switch point as for the Liquiphant II FTL360, FTL365, FDL30, FDL35

"L II" depends on process connection:

L = 115 mm (4.53 in) for flanges and flange-like process connections such as Clamp, DRD...
L = 99 mm (3.9 in) for threads NPT and R (BSPT)
L = 118 mm (4.65 in) for threads G1 (BSP 1)
L = 115 mm (4.53 in) for threads G ¾ (BSP ¾)
L = 104 mm (4.09 in) for flush-mounted 1" (G1" Endress+Hauser welding bosses)

Weights

See "Ordering information" → 44ff

Materials and surfaces

Material specifications as per AISI and DIN-EN.

Parts in contact with process

- Process connection and extension pipe:
  - FTL5x → 316L (1.4404 or 1.4435) optional 2.4602 (AlloyC22)
  - FTL5xH → 316L (1.4435)
- Tuning fork: 316L (1.4435) optional 2.4602 (AlloyC22)
- Flanges:
  - ASME: 316/316L
  - EN: 316L (1.4404)
  - JIS: 316L (1.4404)
- Flange plating: AlloyC22 (2.4602)
- Flat seal for process connection G ¾ or G 1: elastomer fiber, asbestos-free

Surface roughness

Choice of mechanically polished surface roughness (version → probe length → type):

- Ra < 1.5 µm (59.1 µin)
- Ra < 0.3 µm (11.8 µin), 3-A and EHEDG approval and CoC-ASME-BPE

Note!
The surface is electropolished if the additional option "B" or "E" (CoC - ASME BPE) is selected in addition to surface roughness quality Ra < 0.3 µm (11.8 µin). The surface roughness is then: Ra < 0.38 µm (15.0 µin).
With this combination, the wetted parts are made of 316L (1.4435) in accordance with BN2 (delta-ferrite content < 1 %).

Parts with no process contact

- Tuning fork/housing seal: EPDM
- Temperature spacer: 316 L (1.4435)
- Pressure-tight feedthrough: 316L (1.4435)
- Ground terminal on housing (external): 316L (1.4404)
- Cable glands
  - Housing F13, F15, F16, F17: polyamide (PA)
    With B or C approval (→ 44 ordering information): nickel-plated brass
  - Housing F27: polyamide PA, with approval "B" or "C" 316L (1.4435)
  - Housing T13: nickel-plated brass
- Polyester housing F16: PBT-FR with PBT-FR cover or with PA12 transparent cover
  - Cover seal: EPDM
  - Nameplate glued: polyester film (PET)
  - Pressure compensation filter: PBT-GF20
- Stainless steel housing F15: 316L (1.4404)
  - Cover seal: silicone
  - Safety claw: 304 (1.4301)
  - Pressure compensation filter: PBT-GF20, PA
- Aluminum housing F17/F13: EN-AC-AlSi10Mg, plastic-coated
  - Nameplate: aluminum, anodized
  - Cover seal: EPDM
  - Safety claw: nickel-plated brass
  - Pressure compensation filter: silicone
- Stainless steel housing F27: 316L
  - Nameplate: 316L (1.4404)
  - Cover seal: FVMQ (optional: EPDM seal available as spare part)
  - Safety claw: 316L (1.4435)
- Aluminum housing T13: EN-AC-AlSi10Mg, plastic-coated,
  - Nameplate: aluminum, anodized
  - Cover seal: EPDM
  - Safety claw: nickel-plated brass
- Compact housing (valve connector or M12 connector): 316L (1.4435)

Process connections

- Parallel thread G ¾, G 1 to DIN ISO 228/I with flat seal to DIN 7603
- Tapered thread R ¾, R 1 to EN10226
- Tapered thread ¾ -14 NPT, 1 - 11½ NPT as per ASME B 1.20.1
- Flush-mounted installation with weld-in adapter to factory standard Endress+Hauser (G ¾, G 1)
- Flush-mounted installation with weld-in adapter to factory standard Endress+Hauser (1"), sensor can be positioned
- Tri-Clamp 1½", 2" to ISO 2852
- Threaded pipe joint DN 32, 40, 50 to DIN 11851
- Aseptic connection DN 50 to DIN 11864-1
  Form A for pipe DIN 11850
- SMS connection 2" (DN 51)
- DRD flange
- Varivent® DN 50 (50/40) to factory standard Tuchenhagen
- Flanges: as per EN/DIN 1092-1 from DN 25, as per ASME B 16.5 from 1", as per JIS B2220 (RF)
- Ingold DN25 fitting length 46 mm (1.81 in) with thread adapter nut G1 ¼

Further details at Ordering information → 44.

Human interface

Electronic inserts

With FEL51, FEL52, FEL54, FEL55:

- 2 switches for safety mode and density change
- green LED to indicate operational status
- red LED to indicate the switching status, flashes in the event of corrosion damage on sensor or if the electronics are defective

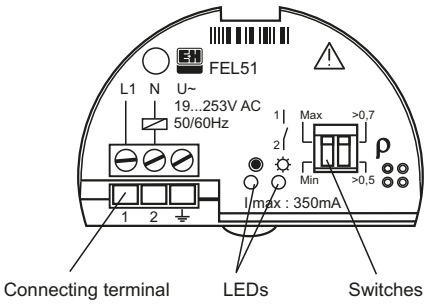

L00-FTL5xxxx-03-05-xx-en-001

With FEL56:

- 2 switches for safety mode and density change
- green LED flashes to indicate operational status
- red LED to indicate the switching status, flashes in the event of corrosion damage on sensor or if the electronics are defective

With FEL57:

- 2 switches for density change and Testing
- green LED to indicate operational status
- yellow LED to indicate the covered status, flashes in the event of corrosion damage on sensor or if the electronics are defective

L00-FTL5xxxx-03-05-xx-xx-013

With FEL58:

- 2 switches for safety mode and density change
- green LED
  - flashes quickly to indicate operational status,
  - flashes slowly in the event of corrosion damage to the sensor of if the electronics are defective
- yellow LED to indicate the switching status, Test key – breaks the cable connection

With FEL50A:

- 8 switches for configuring the device address
- green LED to indicate operational status, pulsing to indicate communication;
- yellow LED to indicate the switching status, flashes in the event of corrosion damage on sensor or if the electronics are defective

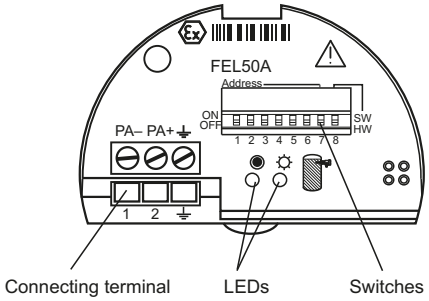

L00-FTL5xxxx-03-05-xx-en-002

With FEL50D:

- yellow LED: to indicate the validation of the measurement
- green LED: to indicate the operational status
- red LED: to indicate faults

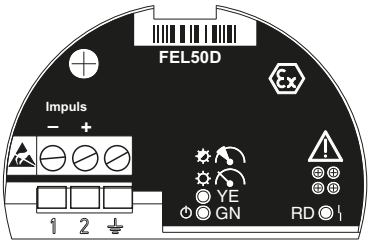

TI328Fxx004

Compact housing

Function test with test magnet

Versions AC, DC-PNP and NAMUR:

During the test, the current state of the electronic switch is reversed.

Hold the test magnet against the marking on the nameplate: The switching status is changed.

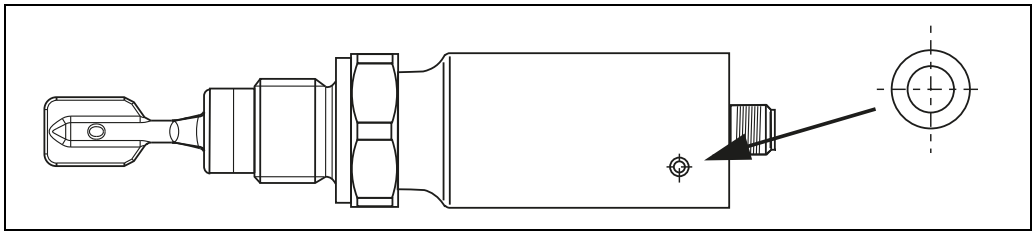

L00-FTL5xxxx-19-05-xx-xx-001

Light signals

Versions AC and DC-PNP with valve connector or cable tail

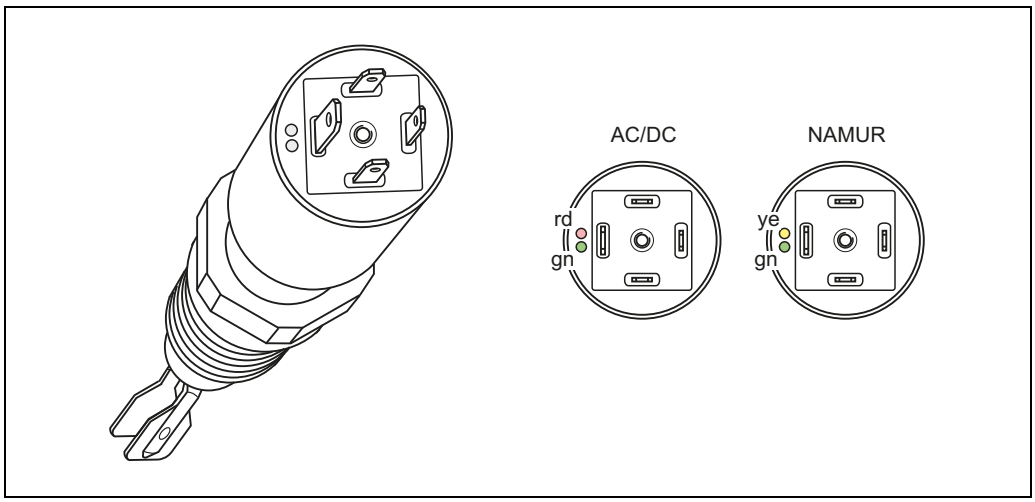

L00-FTL5xxxx-07-05-xx-xx-005

Green light (gn) lights up (AC/DC):

Liquiphant M is connected to the power supply and is operational.

Green light (gn) flashing (NAMUR):

Liquiphant M is connected to the power supply and is operational.

Red light (rd) lights up (AC/DC):

MAX application mode (overfill protection): sensor is immersed in liquid.
MIN application mode (dry running protection): sensor is not immersed in liquid.

Yellow light (ye) lights up (NAMUR):

MAX application mode (overfill protection): sensor is not immersed in liquid.
MIN application mode (dry running protection): sensor is immersed in liquid.

Red light (rd) flashing (AC/DC):

Liquiphant M has detected a fault.

Version NAMUR and DC-PNP with M12x1 round connector 316L

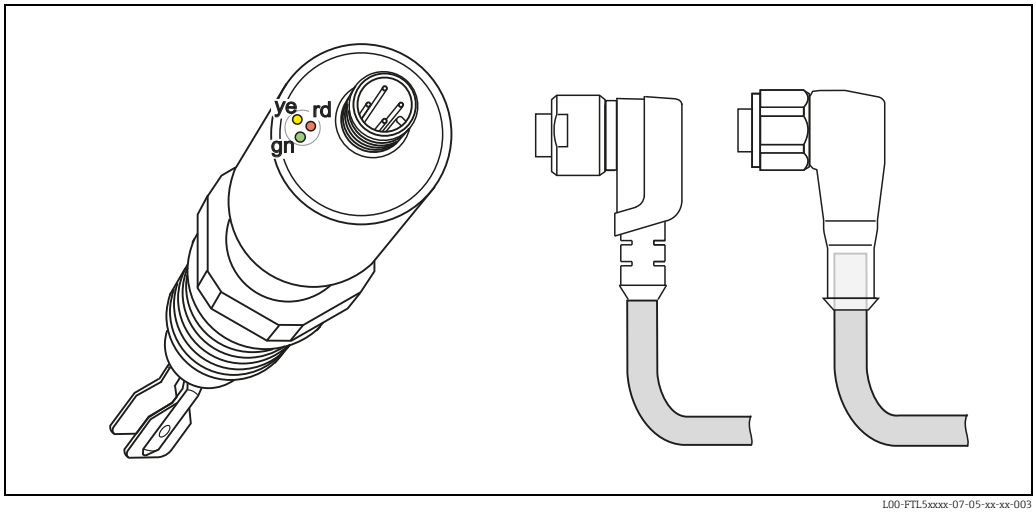

L00-FTL5xxxx-07-05-xx-xx-003

Green light (gn) lights up (DC-PNP):

Liquiphant M is connected to the power supply and is operational.

Green light (gn) flashing with 1 Hz (NAMUR):

Liquiphant M is connected to the power supply and is operational.

Yellow light (ye) lights up (DC-PNP):

Sensor is immersed in liquid.

Yellow light (ye) lights up (NAMUR):

MAX application mode (overfill protection): sensor is not immersed in liquid.
MIN application mode (dry running protection): sensor is immersed in liquid.

Red light (rd) flashing (DC-PNP):

Liquiphant M has detected a fault.

Green light (gn) flashing with 0.3 Hz (NAMUR):

Liquiphant M has detected a fault.

Version DC-PNP with M12x1 round connector 316L

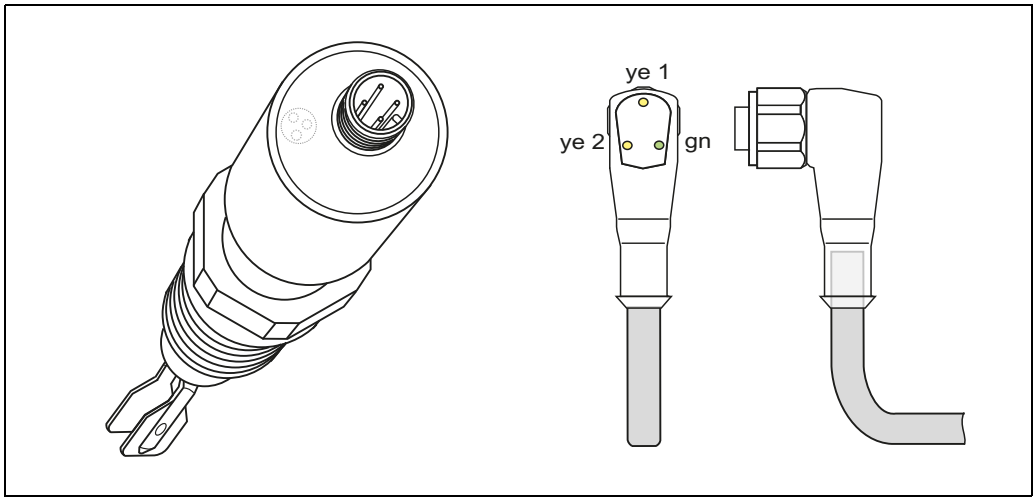

L00-FTL5xxxx-07-05-xx-xx-004

Green light (gn) lights up:

Liquiphant M is connected to the power supply and is operational.

Yellow light (ye 1) lights up:

MAX application mode (overfill protection): sensor is not immersed in liquid.
MIN application mode (dry running protection): sensor is not immersed in liquid.

Yellow light (ye 2) lights up:

MAX application mode (overfill protection): sensor is immersed in liquid.
MIN application mode (dry running protection): sensor is immersed in liquid.

Green light (gn) lights up, both yellow lights (ye 1+2) do not light up:

Liquiphant M has detected a fault.

Operating concept

Onsite configuration

Certificates and approvals

CE mark

The measuring system meets the legal requirements of the applicable EC Directives. These are listed in the corresponding EC Declaration of Conformity along with the standards applied.
Endress+Hauser confirms successful testing of the device by affixing to it the CE mark.

RoHS

The measuring system complies with the substance restrictions of the EU Directive on the restriction of the use of certain hazardous substances 2011/65/EU (RoHS 2).

RCM-tick mark

The product or measuring system supplied complies with the regulations of the Australian Communications and Media Authority (ACMA) for network integrity, performance characteristics and health and safety requirements. The specifications for electromagnetic compatibility, in particular, are observed. The products bear the RCM-tick mark on their nameplate.

A0029561

EAC conformity

The measuring system meets the legal requirements of the applicable EAC Directives.
These are listed in the corresponding EAC Declaration of Conformity along with the standards applied.

Endress+Hauser confirms successful testing of the device by affixing to it the EAC mark.

CRN approval

The approved process connections are listed in the CRN-approval (Canadian Registration Number).
Details about the maximum pressure values are available in the download area at "www.endress.com/download".
CRN-approved devices are marked on the name plate with the registration number
CRN: 0F15899.2C.

Pressure Equipment Directive 2014/68/EU (PED)

Pressure instruments with permitted pressure ≤ 200 bar (2 900 psi)

Pressure instruments with a flange and threaded boss that do not have a pressure-bearing housing do not fall within the scope of the Pressure Equipment Directive, irrespective of the maximum permitted pressure.

Reason:

According to Article 2, point 5 of EU Directive 2014/68/EU, pressure accessories are defined as "devices with an operational function and having pressure-bearing housings".
If a pressure instrument does not have a pressure-bearing housing (no identifiable pressure chamber of its own), there is no pressure accessory present within the meaning of the Directive.

Note:

A separate analysis must be performed for pressure instruments that are part of safety equipment designed to protect a pipe or vessel from exceeding allowable limits (safety accessory in accordance with Pressure Equipment Directive 2014/68/EU, Article 2, point 4).

Process seal according to ANSI/ISA 12.27.01

Practice in North America for the installation of process seals
Endress+Hauser devices are designed as either single seal or dual seal devices with an alarm in accordance with ANSI/ISA 12.27.01. This means that the user does need to install for an external secondary process seal in the thermowell which is required in ANSI/NFPA 70 (NEC) and CSA 22.1 (CEC). These devices comply with installation practice in North America and enable very safe, low-cost installation in pressurized applications with hazardous media.
Further information is provided in the Safety Instructions (XA) for the specific device → 📄 51 ff.

Product	Type	Max. process pressure	Marking	Listing
Liquiphant M	FTL50-S/T##... FTL50-P/Q/R##...	64 bar (928 psi)	Single Seal	CSA/FM
	FTL51-S/T##... FTL51-P/Q/R##...	64/100 bar (928/1450 psi)	Single Seal	CSA/FM
	FTL50H-S/T##... FTL50H-P/Q/R##...	64 bar (928 psi)	Single Seal	CSA/FM
	FTL51H-S/T##... FTL51H-P/Q/R##...	64 bar (928 psi)	Single Seal	CSA/FM

General approvals

The following approvals are available for Liquiphant M FTL50H, FTL51H:

- EHEDG: certificate
- 3A: 3A certificate (USA), Authorization no. 459: 74-xx Sensors and Sensor Fittings and Connections
- Certificate of Compliance as per ASME BPE-2012. (Order code: additional option = "B" or "E")

Process connections	Order code	EHEDG + 3A	ASME BPE + CoC		
			Ra (µm)		
			<0.3	< 0.38	< 1.5
Thread ISO228 G3/4, 316L, installation Thread ISO228 G1, 316L, installation Accessories: weld-in adapter	GQ2 GW2	X	X	–	X
Tri-Clamp ISO2852 DN25-38 (1 to 1-1/2"), 316L Tri-Clamp ISO2852 DN40-51 (2"), 316L	TC2 TE2	X	X	X	X
DIN11851 DN32 PN25 slotted nut, 316L DIN11851 DN40 PN25 slotted nut, 316L DIN11851 DN50 PN25 slotted nut, 316L	MA2 MC2 ME2	X	X	X	X
Flush-mounted, 316L, installation Accessories, weld-in adapter	EE2	X	X	X	X
DIN11864-1 A DN50 pipe DIN11850, Slotted nut, 316L	HE2	X	X	X	X
DRD 65mm, 316L	PE2	–	–	–	X
SMS 2" PN25, 316L	UE2	–	X	X	X
Varivent N pipe DN65-162 PN10, 316L	WE2	X	X	X	X
Ingold fitting 25x46mm, 316L	TT2	–	–	X	–

Note!
- Suitable fittings and seals must be used to ensure hygiene-compliant design according ASME BPE etc.
- Surfaces with ASME-BPE option: Ra < 0.38 µm (< 15 µin) electropolished and passivated or Ra < 1.5 µm (59 µin) mechanically polished.
- To avoid risk of contamination, install according to the “Hygienic Equipment Design Criteria (HDC)” as stated in the Subgroup Design Principles of the EHEDG, Doc. 8.

- Suitable fittings and seals must be used to ensure hygiene-compliant design according to the specifications of 3-A SSI and EHEDG Position Paper in its most actual version.
- The leak-tight connections can be cleaned with the cleaning methods (CIP and SIP) usually used in this industry. For CIP (Clean in Place) and SIP (Sterilize in Place) processes the pressure and temperature specifications of the sensor and the process connections must be observed.
- The device has been developed for use in hygienic processes. The wetted materials meet the requirements of FDA and 3-A-Sanitary Standard No. 74-XX. Endress+Hauser confirms this by affixing the 3-A sign to the device!
- For T-piece installation of the sensor in combination with EHEDG certificate, note:
  The T-piece must be smaller with L / (D- d) ≤ 1.

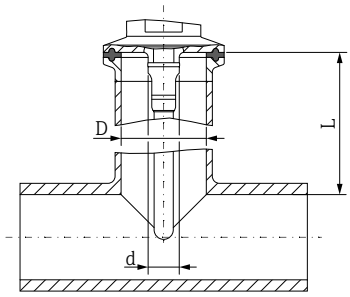

A0041791

Certificate of current Good Manufacturing Practises (cGMP)

Product Configurator, Ordering information "Additional option" "H" or "I"

- The declaration is available in English only
- Materials of construction of product wetted parts
- TSE compliance
- Polishing and surface finish
- Material/ compound compliance table (USP Class VI, FDA conformity)

Other certificates

- Material certificate as per EN 10204/3.1 for all wetted parts NACE MR0175/MR0103, AD2000
- Leak detection system in conjunction with WHG approval
  Approval number: Z–65.40–446 (see also "Ordering information" → 44)
- TSE Certificate of Suitability
  The following applies to wetted device components:
  – They do not contain any materials derived from animals.
  – No additives or operating materials derived from animals are used in production or processing.

Note!
Wetted device components are listed in the "Mechanical construction“ (→ 30 ff.) and "Ordering information“ (→ 44) sections.

Manufacturer declarations

The following documents can be ordered together with the document, depending on the desired device configuration:

- FDA conformity
- TSE-free: Materials not derived from animals
- Regulation (EC) no. 2023/2006 (GMP)
- Regulation (EC) No. 1935/2004 materials in contact with food

The applicable European guidelines and standards can be found in the relevant EU Declarations of Conformity.

Regulation (EU) No. 10/2011: The regulation on plastic materials does not apply to the Liquiphant FTL5x, as the wetted materials are made exclusively of stainless steel.
The silicone seals supplied comply with BFR recommendation XV (commodities based on silicones from the Federal Institute for Risk Assessment - BFR), and the EPDM seals provided comply with BFR recommendation XXI (commodities based on natural and synthetic rubber).

Use in hazardous zones

Pay particular attention to the information provided in the documentation: Safety Instructions, Control Drawings etc. → 51

ASME B 31.3

Design and materials in accordance with ASME B31.3 The welding seals are through-penetration welded and comply with ASME Boiler and Pressure Vessel Code Section IX and EN ISO 15614-1.

Pressure equipment directive

The Pressure Equipment Directive 97/23/EC does not apply to the Liquiphant FTL5x, as it does not have a pressurized housing in accordance with Article 1, Paragraph 2.1.4 of the directive.

Ordering information

Detailed ordering information is available from the following sources:

- In the Product Configurator on the Endress+Hauser website: www.endress.com → Click "Corporate" → Select your country → Click "Products" → Select the product using the filters and search mask → Open the product page → The "Configuration" button to the right of the product image opens the Product Configurator.
- From your Endress+Hauser Sales Center: www.addresses.endress.com

Note!
Product Configurator - the tool for individual product configuration

- Up-to-the-minute configuration data
- Depending on the device: direct input of information specific to measuring point, such as measuring range or operating language
- Automatic verification of exclusion criteria
- Automatic creation of the order code and its breakdown in PDF or Excel output format
- Ability to order directly from the Endress+Hauser online shop

Accessories

Note!

- All dimensions in mm (in)!
- For additional information on weld-in adapters, refer to TI00426F.
- The tolerance of the thread start between the weld-in adapter and sensor is ± 15°.

Weld-in adapter **Overview**

	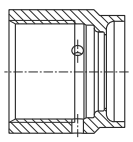 a0008246	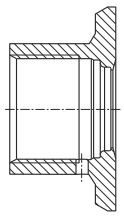 a0008251	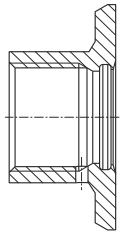 a0008256	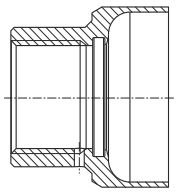 a0011924	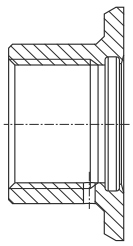 a0008248	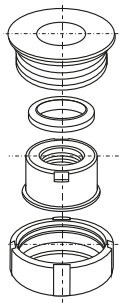 a0008253
	G¾, d=29 (1.14) without flange	**G¾, d=50 (1.97) with flange**	**G¾, d=55 (2.17) with flange**	**G1, d=53 (2.09) without flange**	**G1, d=60 (2.36) with flange**	**G1 can be positioned**
Material roughness µm (µin)	316L 1.5 (59.1)	316L 0.8 (31.5)	316L 0.8 (31.5)	316L 0.8 (31.5)	316L 0.8 (31.5)	316L 0.8 (31.5)
Without inspection certificate EN10204-3.1 material	71258357	71258355	52001052[3)]	71258358	52001051[1), 3)]	52001221[2), 3)]
With inspection certificate EN10204-3.1 material	52028295[3)]	52018765[3)]	52011897[3)]	71093129[1), 3)]	52011896[1), 3)]	52011898[2), 3)]
Seal (replacement part: set of 5)	Silicone O-ring 52021717	Silicone O-ring 52021717	Silicone O-ring 52014473	Silicone O-ring 52014472	Silicone O-ring 52014472	Silicone profile gasket 52014424)

		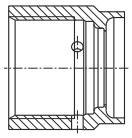 a0008246	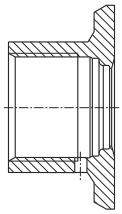 a0008251	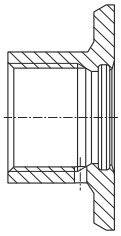 a0008256	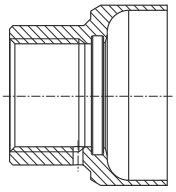 a0011924	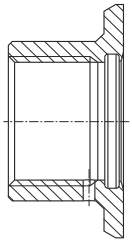 a0008248	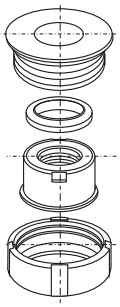 a0008253
		G¾, d=29 (1.14) without flange	**G¾, d=50 (1.97) with flange**	**G¾, d=55 (2.17) with flange**	**G1, d=53 (2.09) without flange**	**G1, d=60 (2.36) with flange**	**G1 can be positioned**
Weld-in dummy		–	–	71168889	71166879	71166879	71181945
Liquiphant M	Feature	**Version**					
FTL50	020			GQ2			
FTL5x					GW2	GW2	GW2
FTL50H				GQ2			
FTL5xH					GW2	GW2	GW2

1) This weld-in adapter replaces the weld-in adapter with the order number 917969-1000.

2) This weld-in adapter replaces the weld-in adapter with the order number 215159-0000.

3) A seal is included in the delivery.

		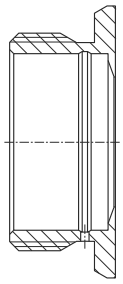 a0008252	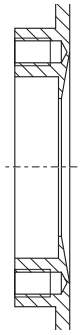 a0008254
		RD52	**DRD DN50 65 (2.56) (welding flange)**
Material roughness µm (µin), process side		316L 0.8 (31.5)	316L/304 0.8 (31.5)
Without inspection certificate EN10204-3.1 material		52001047 [1), 2)]	52002041[2)]/ 916743-0000
With inspection certificate EN10204-3.1 material		52006909 [1), 2)]	52011899[2)]/ –
Seal (replacement part: set of 5)		Silicone profile gasket 52014424	PTFE flat seal 52024228
Weld-in dummy		M40167	–
Device	Feature	**Version**	
Liquiphant M			
FTL5xH	020	EE2	PE2

1) This weld-in adapter replaces the weld-in adapter with the order number 942329-0001.

2) A seal is included in the delivery.

Note!
All the weld-in adapters available are described in document TI00426F.
www.endress.com --> Download -->Advanced--> Documentation code --> TI00426F.

Weather protection cover

For F16 housing

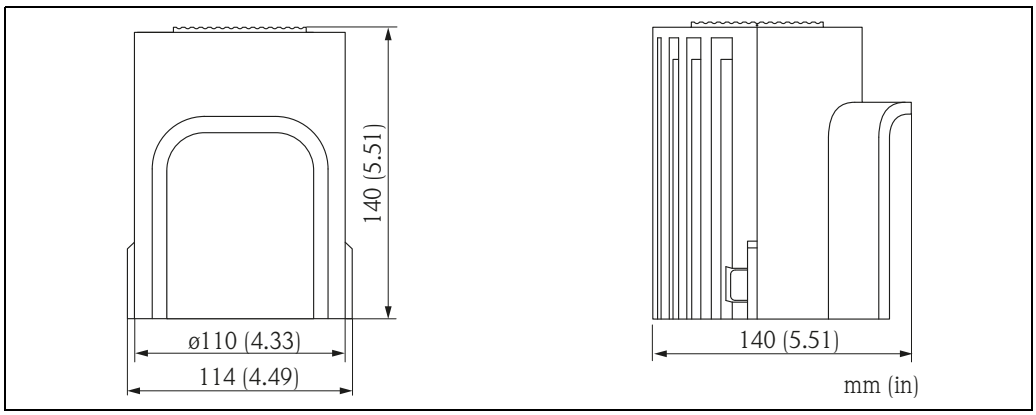

A0018225

Material	Order No.	Weight
PBT, gray	71127760	240 g (8.46 oz)

For F13, F17 and F27 housing

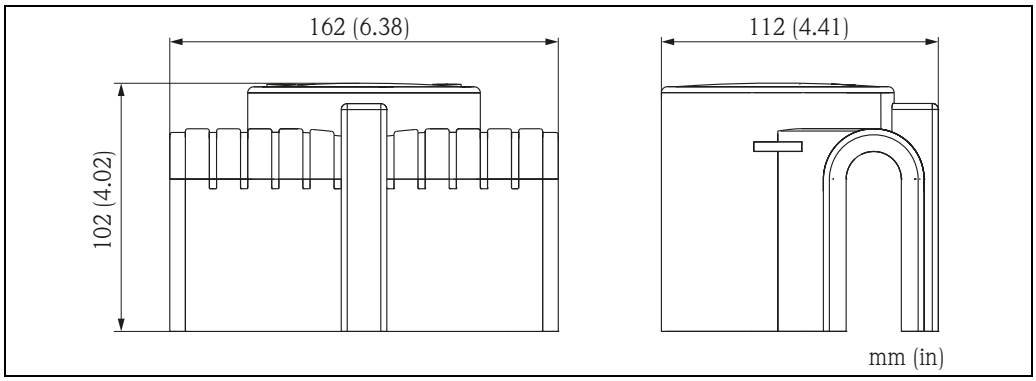

A0018226

Material	Order No.	Weight
PA6, gray	71040497	300 g (10.58 oz)

Lap joint flange

Order number: 918158-0000
With G 1 thread for mounting
a Liquiphant FTL50, FTL51
with process connection GR2

Pressure up to 40 bar (580 psi)

Material: corrosion-resistant steel
1.4301 (AISI 304)

Weight: 0.54 kg (1.19 lbs)

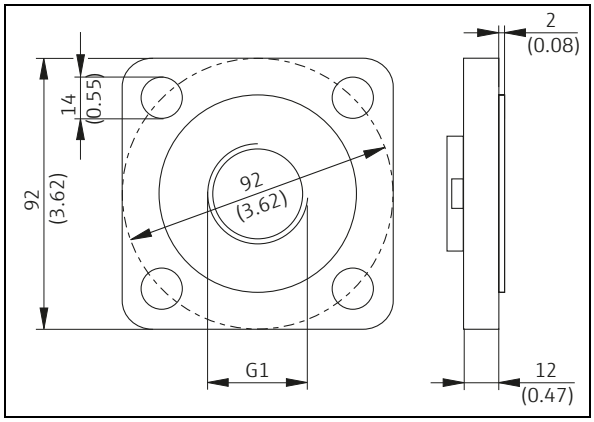

L00-FTL5xxxx-06-05-xx-xx-108

Lap joint flanges

With G 1 thread for mounting
a Liquiphant FTL50, FTL51
with process connection GR2

Material: corrosion-resistant steel
1.4571 (AISI 316Ti)

- Order number: 918143-0000
  Flange DN50 PN40, EN 1092-1
  Weight: 3.11 kg (6.86 lbs)
- Order number: 918144-0000
  Flange ASME 2", 150 psi, RF
  Weight: 2.38 kg (5.25 lbs)

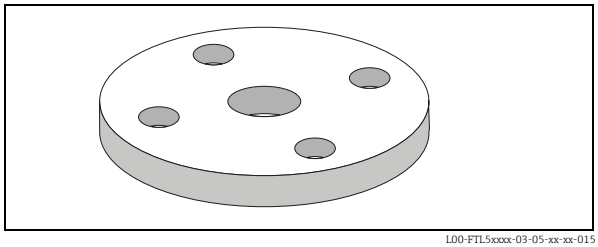

L00-FTL5xxxx-03-05-xx-xx-015

Sliding sleeves for unpressurized operation

Switch point infinitely variable for
Liquiphant MFTL51

Material: corrosion-resistant steel
1.4435 (AISI 316 L)

Weight for G 1, NPT 1: 0.21 kg (0.46 lbs)
Weight for G 1½, NPT 1½: 0.54 kg (1.19 lbs)

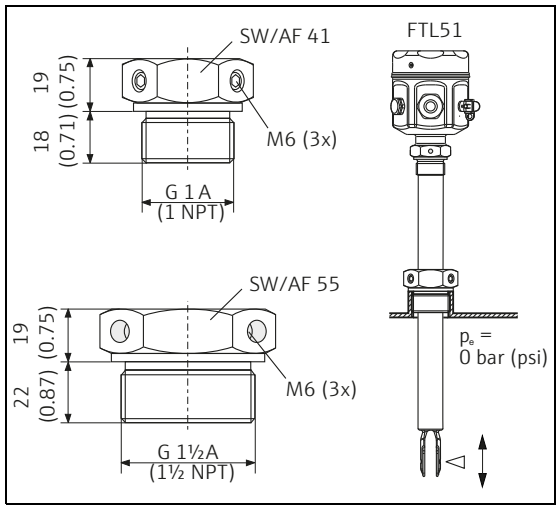

L00-FTL5xxxx-06-05-xx-xx-109

Thread	Standard	Material	Order number	Approval
G 1	DIN ISO 228/I	1.4435 (AISI 316 L)	52003978	
G 1	DIN ISO 228/I	1.4435 (AISI 316 L)	52011888	With inspection certificate EN 10204 - 3.1 material
NPT1	ASME B 1.20.1	1.4435 (AISI 316 L)	52003979	
NPT1	ASME B 1.20.1	1.4435 (AISI 316 L)	52011889	With inspection certificate EN 10204 - 3.1 material
G 1½	DIN ISO 228/I	1.4435 (AISI 316 L)	52003980	
G 1½	DIN ISO 228/I	1.4435 (AISI 316 L)	52011890	With inspection certificate EN 10204 - 3.1 material

Thread	Standard	Material	Order number	Approval
NPT1½	ASME B 1.20.1	1.4435 (AISI 316 L)	52003981	
NPT1½	ASME B 1.20.1	1.4435 (AISI 316 L)	52011891	With inspection certificate EN 10204 - 3.1 material

High pressure sliding sleeves

For continuous adjustment of the switch point of a Liquiphant M FTL51.
Also for use in hazardous areas. Additional information → 📄 51ff. (ATEX, NEPSI).

Material: corrosion-resistant steel 1.4435 (AISI 316L) or AlloyC22

Weight for G 1, NPT 1: 1.13 kg (2.49 lbs)
Weight for G 1½, NPT 1½: 1.32 kg (2.91 lbs)

Seal package made of graphite.

For G1, G 1½:
Seal is included in the delivery.

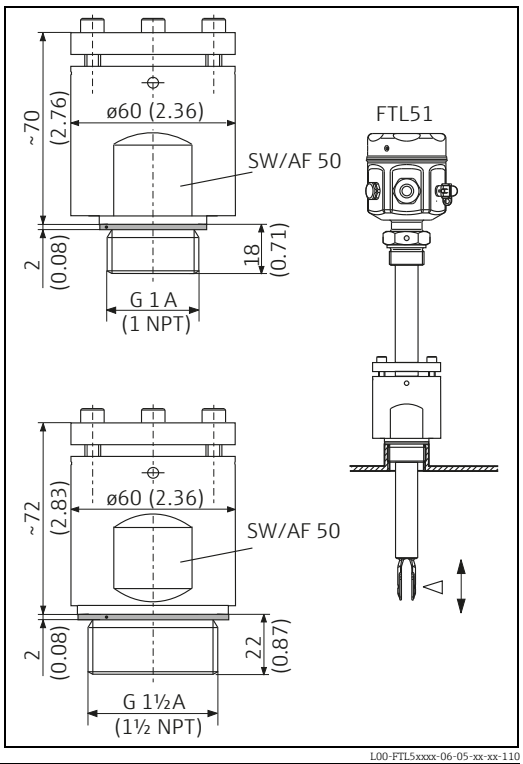

L00-FTL5xxxx-06-05-xx-xx-110

Thread	Standard	Material	Order number	Approval
G 1	DIN ISO 228/1	1.4435 (AISI 316 L)	52003663	
G 1	DIN ISO 228/1	1.4435 (AISI 316 L)	52011880	With inspection certificate EN 10204 - 3.1 material
G 1	DIN ISO 228/1	AlloyC22	71118691	With inspection certificate EN 10204 - 3.1 material
NPT1	ASME B 1.20.1	1.4435 (AISI 316 L)	52003667	
NPT1	ASME B 1.20.1	1.4435 (AISI 316 L)	52011881	With inspection certificate EN 10204 - 3.1 material
NPT1	ASME B 1.20.1	AlloyC22	71118694	With inspection certificate EN 10204 - 3.1 material
G 1½	DIN ISO 228/1	1.4435 (AISI 316 L)	52003665	
G 1½	DIN ISO 228/1	1.4435 (AISI 316 L)	52011882	With inspection certificate EN 10204 - 3.1 material
G 1½	DIN ISO 228/1	AlloyC22	71118693	With inspection certificate EN 10204 - 3.1 material
NPT1½	ASME B 1.20.1	1.4435 (AISI 316 L)	52003669	
NPT1½	ASME B 1.20.1	1.4435 (AISI 316 L)	52011883	With inspection certificate EN 10204 - 3.1 material
NPT1½	ASME B 1.20.1	AlloyC22	71118695	With inspection certificate EN 10204 - 3.1 material

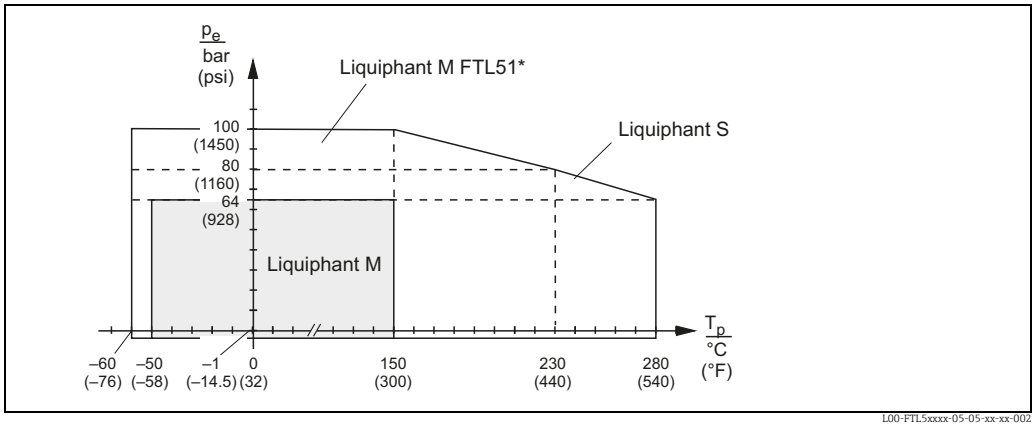

L00-FTL5xxxx-05-05-xx-xx-002

** FTL51 with high-pressure sliding sleeve (100 bar (1450 psi)). See "Additional option" option "P" or "R".1*

Cover with sight glass

Order number: 943461-0001
for polyester housing F16

Material: PA 12

Weight: 0.04 kg (0.09 lbs)

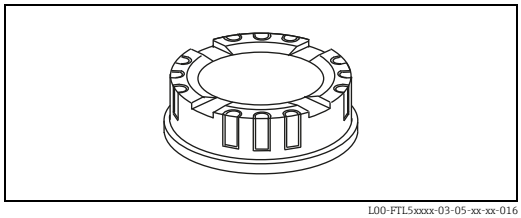

L00-FTL5xxxx-03-05-xx-xx-016

Cover with sight glass

For stainless steel housing F15

Material: AISI 316L

Weight: 0.16 kg (0.35 lbs)

- Order number: 52027002
  With glass sight glass
- Order number: 52028207
  With PC sight glass
  (Not for CSA, General Purpose)

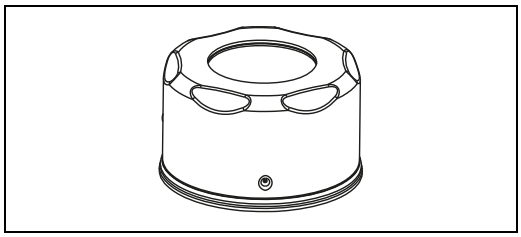

L00-FTL5xxxx-03-05-xx-xx-017

Circular connector

Order number: 52010285

4x0.34 M12 socket

Cable: PVC (gray) 5 m (16 ft)

Body: PUR (blue)

Thread adapter nut: Cu Sn/Ni

Degree of protection: IP67

Temperature range with fixed cable:
−25 to +70 °C (-13 to +158 °F)

Temperature range with flexible cable:
−5 to +70 °C (23 to +158 °F)

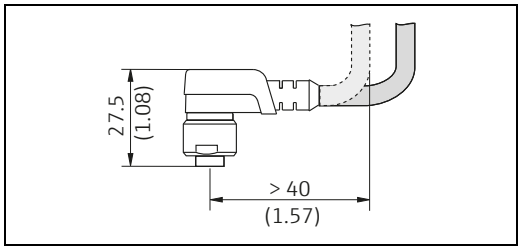

L00-FTL5xxxx-06-05-xx-xx-111

Order number: 52024216

4x0.34 M12 socket

Cable: PVC (orange) 5 m (16 ft)

Body: PVC (orange)

Thread adapter nut: 316L

Degree of protection: IP69 (fully locked)

Temperature range: −25 to +70 °C (-13 to +158 °F)

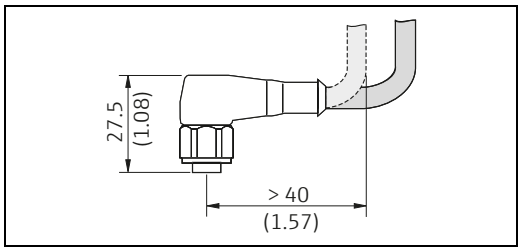

L00-FTL5xxxx-06-05-xx-xx-112

Order number: 52018763

4x0.34 M12 socket with integrated LEDs

Cable: PVC (orange) 5 m (16 ft)

Body: PVC (transparent)

Thread adapter nut: 316L

Degree of protection: IP69IP69 (fully locked)

Temperature range: −25 to +70 °C (-13 to +158 °F)

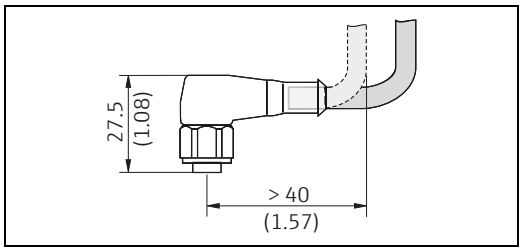

L00-FTL5xxxx-06-05-xx-xx-113

Documentation

Note!
You can find supplementary documentation on the product pages at www.endress.com

Operating Instructions

BA00141F: Electronic insert FEL50A for Liquiphant M, PROFIBUS PA

BA00335F: Liquiphant M Density, density computer FML621

KA00143F: Liquiphant M FTL50, FTL51

KA00144F: Liquiphant M FTL50(H), FTL51(H)

KA00162F: Liquiphant M FTL51C

KA00163F: Liquiphant M FTL50-####### # 7 #, FTL51-####### # 7 #

KA00164F: Liquiphant M FTL50H-######## 7 #, FTL51H-######## 7 #

KA00165F: Liquiphant M FTL51C-######## 7 ##

KA00220F: Liquiphant M FTL5#-# ### ## # #3 #, FTL5#H-# ### ## # #3 #

KA00284F: Electronic insert FEL50D for Liquiphant M Density FTL50, FTL51

KA00285F: Electronic insert FEL50D for Liquiphant M Density FTL50H, FTL51H

KA00286F: Electronic insert: FEL50D for Liquiphant M Density FTL51C

KA00151F: Liquiphant M sliding sleeve for FTL51, G 1, NPT 1

KA00152F: Liquiphant M sliding sleeve for FTL51, G 1½, NPT 1½

KA00153F: Liquiphant M high-pressure sliding sleeve for FTL51, G 1, NPT 1

KA00154F: Liquiphant M high-pressure sliding sleeve for FTL51, G 1½, NPT 1½

Technical Information

TI00241F: General instructions for electromagnetic compatibility
(Test procedure, installation recommendation)

TI00347F: Liquiphant M FTL51C, wetted parts with highly corrosion-resistant coating
ECTFE, PFA or enamel coating

TI00350F: Isolating amplifier FTL325P, 1- or 3-channel switching units for top-hat rail mounting
for Liquiphant M with electronic insert FEL57

TI00353F: Isolating amplifier FTL325N, 1- or 3-channel switching units for top-hat rail mounting
for Liquiphant M with electronic insert FEL56, FEL58

TI00354F: Liquiphant S FTL70/71, for medium temperatures up to 280 °C (536 °F)

TI00360F: Isolating amplifier FTL375P, 1 to 3-channel switching units for top-hat rail mounting
for Liquiphant M with electronic insert FEL57

TI00420F: Liquiphant M Density, density computer FML621

TI00426F: Weld-in adapter

Functional safety (SIL)

SD00164F: Liquiphant M with electronic insert FEL51 (MAX)

SD00185F: Liquiphant M with electronic insert FEL51 (MIN)

SD00163F: Liquiphant M with electronic insert FEL52 (MAX)

SD00186F: Liquiphant M with electronic insert FEL52 (MIN)

SD00162F: Liquiphant M with electronic insert FEL54 (MAX)

SD00187F: Liquiphant M with electronic insert FEL54 (MIN)

SD00167F: Liquiphant M with electronic insert FEL55 (MAX)

SD00279F: Liquiphant M with electronic insert FEL55 (MIN)

SD01508F: Liquiphant M with electronic insert FEL57 + Nivotester FTL325P (MAX + MIN)

SD01521F: Liquiphant M with electronic insert FEL56 + Nivotester FTL325N (MAX + MIN)

SD01522F: Liquiphant M with electronic insert FEL58 + Nivotester FTL325N (MAX + MIN)

Safety Instructions

ATEX

XA00115F, XA00114F, XA00108F, XA00031F: DEKRA 15 ATEX 0088
- Ex d, Ex de

XA00113F, XA00064F, XA00063F: KEMA 99 ATEX 0523 X
- Ex d, Ex de

XA00182F: EG 01 007 X
- Ex nA

IEC Ex

XA01371F, XA00114F, XA00108F, XA00031F: IECEx DEK 15.0060
- Ex d, Ex de

XA00113F, XA00064F, XA00063F: KEMA 99 ATEX 0523 X; IECEx DEK 15.0028X
- Ex d, Ex de

Safety Instructions (NEPSI)

XA00401F/00/B2: Ex d IIC/IIB T3...T6 , Ex d IIC T2...T6
(NEPSI GYJ06424)

XC00009F/00/b2: Ex ia IIC T2...T6, Ex ia IIB T3...T6
(NEPSI GYJ05556, NEPSI GYJ06464),

XC00010F/00/b2: Ex nA II T3...T6, Ex nC/nL IIC T3...T6
(NEPSI GYJ04360, NEPSI GYJ071414)

Control Drawings

ZD00041F: Liquiphant M (IS and NI) Current output PFM, NAMUR Entity installation
Class I, Div. 1, 2, Groups A, B, C, D
Class I, Zone 0
Class II, Div. 1, 2, Groups E, F, G
Class III

ZD00042F: Liquiphant M, Liquiphant S (cCSAus / IS)
Class I, Div. 1, Groups A, B, C, D Ex ia IIC T6
Class II, Div. 1, Groups E, F, G
Class III

ZD00043F: Liquiphant M (NI), FTL50(H), FTL51(H), FTL51C, FTL70, FTL71
Class I, Div. 2, Groups A, B, C, D
Class II, Div. 2, Groups F, G
Class III

ZD00240F: Liquiphant M, Liquiphant S (cCSAus / XP)
Class I, Groups A, B, C, D
Class II, Groups E, F, G
Class III

ZD00244F: Liquiphant M (IS and NI) PROFIBUS PA, FOUNDATION FieldbusClass I, Zone 0, IIC
Class I, Division 1, 2, Groups A, B, C, D
Class II, Division 1, 2, Groups E, F, G
Class III

LENNTECH
WATER TREATMENT SOLUTIONS
info@lenntech.com Tel. +31-152-610-900
www.lenntech.com Fax. +31-152-616-289

Endress+Hauser
People for Process Automation