LENNTECH
WATER TREATMENT SOLUTIONS

Technical Information
Solicap M FTI55, FTI56
Capacitance



Point level switch for bulk solids

Application
Solicap M is used for point level detection in bulk solids and can be operated in minimum or maximum fail-safe mode.

Due to its robust construction, it can also be used to provide accurate measurements in applications with very high tensile loads (up to 60 kN for rope version) or lateral loads (up to 300 Nm for rod version).

In combination with Fieldgate (for remote interrogation of measured values using internet technology), Solicap M represents an ideal solution for material provisioning and logistical optimization (inventory control).

Your benefits

- Extremely robust design for harsh process conditions
- Easy and fast commissioning as calibration is performed at the press of a button
- Universal application thanks to wide range of certificates and approvals
- Two-stage overvoltage protection against static discharges from the silo
- Active buildup compensation for bulk solids that tend to cake
- Use in safety systems with specific requirements in terms of functional safety to SIL2/SIL3 in conjunction with electronic insert FEI55
- Increased safety due to permanent automatic monitoring of electronics
- Reduction in storage costs thanks to easy-to-shorten rod model (for partial insulation) and rope model (for partial and full insulation)
- Two-point control (e.g. for controlling a handling device)

Endress+Hauser
People for Process Automation

Table of contents

Function and system design 4
Measuring principle 4
Application examples 4
Measuring system 5
Electronic versions 7
System integration via Fieldgate 8

Input 9
Measured variable 9
Measuring range (valid for all FEI5x) 9
Input signal 9
Measuring conditions 9
Minimum probe length for nonconductive media (<1µs/cm) 9

Output 10
Galvanic isolation 10
Switch behavior 10
Switch-on behavior 10
Fail-safe mode 10
Switching delay 10

Electronic insert FEI51 (AC 2-wire) 11
Power supply 11
Electrical connection 11
Signal on alarm 11
Output signal 11
Connectable load 11

FEI52 electronic insert (DC PNP) 12
Power supply 12
Electrical connection 12
Output signal 12
Signal on alarm 12
Connectable load 12

Electronic insert FEI53 (3-wire) 13
Power supply 13
Electrical connection 13
Output signal 13
Signal on alarm 13
Connectable load 13

FEI54 electronic insert (AC/DC with relay output) . 14
Power supply 14
Electrical connection 14
Output signal 14
Signal on alarm 14
Connectable load 14

Electronic insert FEI55 (8/16 mA; SIL2/SIL3) 15
Power supply 15
Electrical connection 15
Output signal 15
Signal on alarm 15
Connectable load 15

FEI57S electronic insert (PFM) 16
Power supply 16
Electrical connection 16
Output signal 16
Signal on alarm 16
Connectable load 16

Electronic insert FEI58 (NAMUR H-L edge) 17
Power supply 17
Electrical connection 17
Output signal 17
Signal on alarm 17
Connectable load 17

Power supply 18
Electrical connection 18
Connector 18
Cable entry 18

Performance characteristics 18
Reference operating conditions 18
Switch point 18
Ambient temperature effect 18

Installation 19
General notes 19
Preparing to install rod probes FTI55 20
Preparing to install rope probes FTI56 22
Probe with separate housing 26

Operating conditions: Environment 28
Ambient temperature range 28
Storage temperature 28
Climate class 28
Degree of protection 28
Vibration resistance 28
Cleaning 28
Electromagnetic compatibility (EMC) 28
Shock resistance 28

Operating conditions: Process 29
Process temperature range 29
Process pressure and temperature derating 31
State of aggregation 32

Mechanical construction 33
Overview 33
Material 38
Weight 38

Human interface 39
Electronic inserts 39
Electronic inserts 40
Electronic insert 41

Certificates and approvals 42
CE approval 42
Additional certification 42
Other standards and guidelines 42

Ordering information 42
Solicap M FTI55 42
Solicap M FTI56 44

Accessories 46
Weather protection cover 46
Overvoltage protection HAW56x 46
Spare parts 46

Documentation 47
Technical Information 47
Operating Instructions 47
Certificates 47
Patents 47

Function and system design

Measuring principle

The principle of capacitance point level detection is based on the change in capacitance of a capacitor as a result of the probe being covered by bulk solids. The probe and container wall (conductive material) form an electric capacitor. When the probe is in air (1), a certain low initial capacitance is measured. If the container is being filled, the capacitance of the capacitor increases as more of the probe is covered (2), (3).

The point level switch switches when the capacitance C_S specified during calibration is reached.
In addition, a probe with inactive length ensures that the effects of medium buildup or condensate near the process connection are avoided. A probe with active buildup compensation compensates for the effects of buildup on the probe in the area of the process connection.

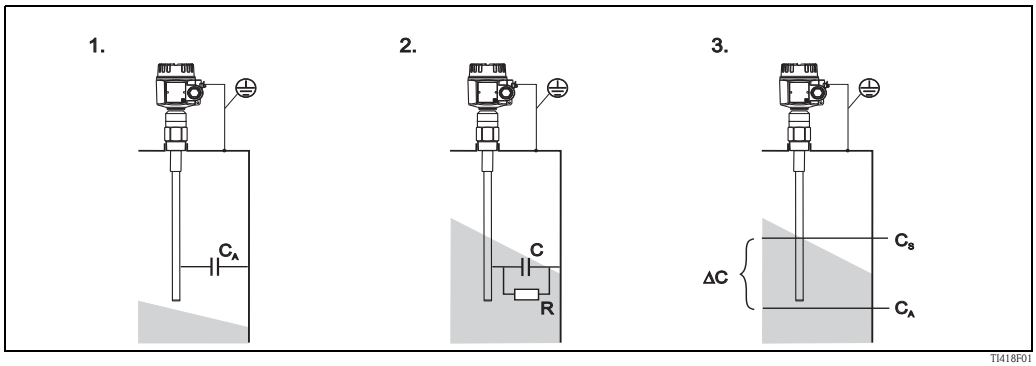

R: Conductivity of bulk solids
C: Capacitance of bulk solids
C_A: Initial capacitance (probe not covered)
C_S: Switching capacitance
ΔC: Change in capacitance

Function

The electronic insert selected for the probe determines the change in capacitance depending on how much of the probe is covered. This ensures accurate switching at the switchpoint (level) calibrated for this purpose.

Application examples

Sand, glass aggregate, gravel, molding sand, lime, ore (crushed), plaster, aluminum shavings, cement, grain, pumice, flour, dolomite, sugar beet, kaolin, fodder and similar bulk solids.

In general:
Bulk solids with a relative dielectric constant $\varepsilon_r \geq 2.5$.

Measuring system

The make-up of the measuring system depends on the electronic insert selected.

Point level switch

The complete measuring system consists of:

- the point level switch, Solicap M FTI55 or FTI56
- An electronic insert FEI51, FEI52, FEI54

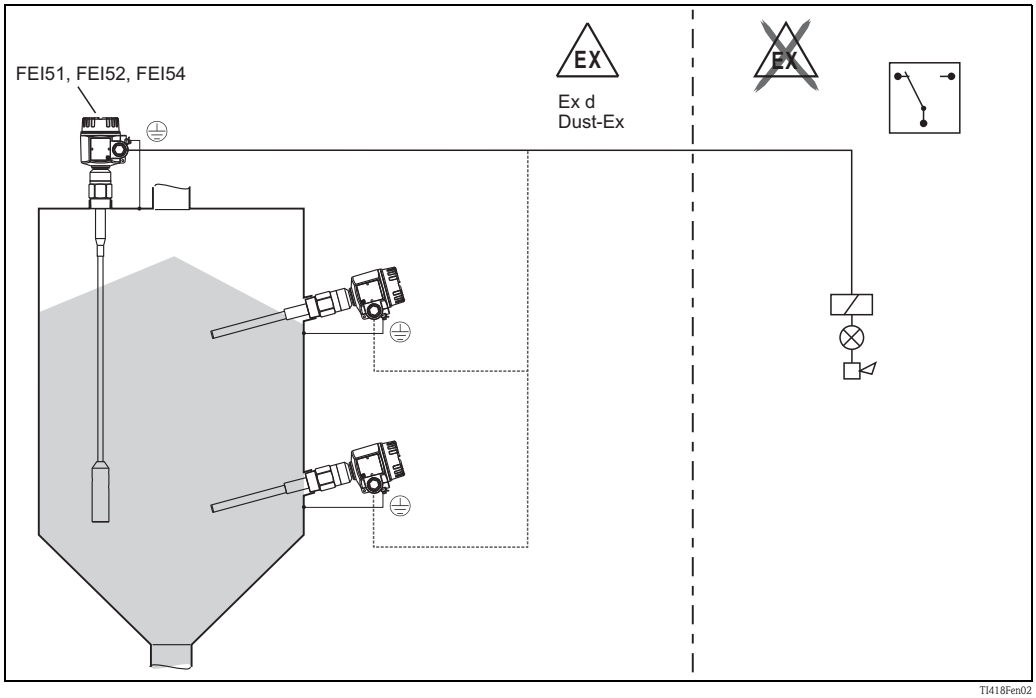

Two-point control (Δs function)

Note!

Partially insulated probes only in conjunction with nonconductive bulk solids.

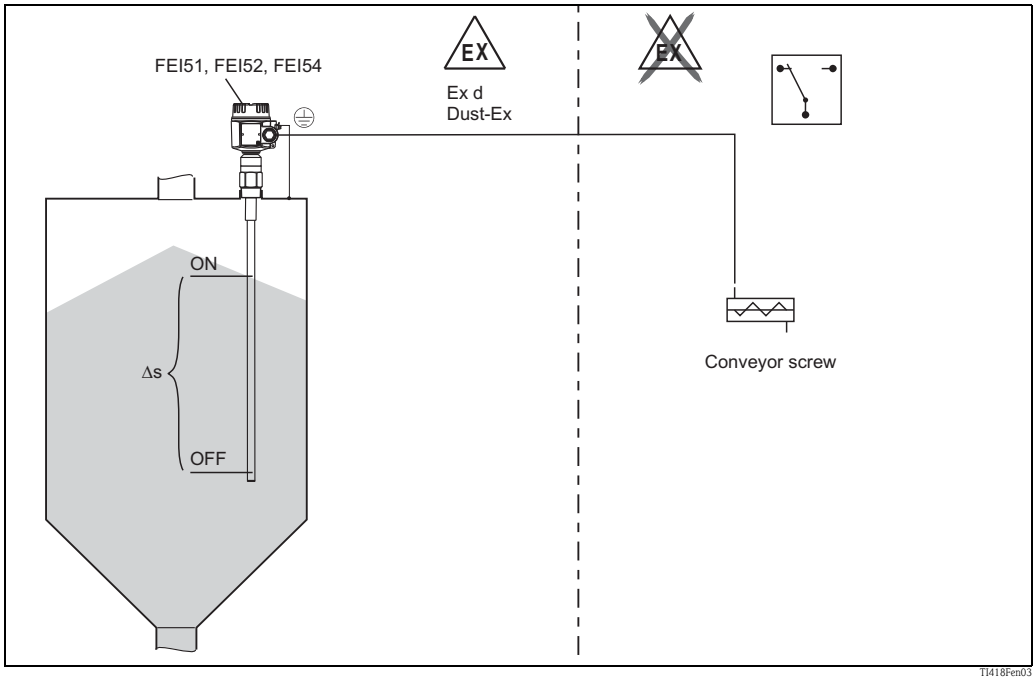

The point level switch can also be used to control a screw conveyor, for example, where the on and off values can be freely defined.

Point level switch

Solicap M FTI5x with electronic versions FEI53, FEI57S and FEI58 for connecting to a separate switching unit.

The complete measuring system consists of:

- the capacitance point level switch, Solicap M FTI55 or FTI56
- an electronic insert FEI53, FEI57S, FEI58
- a transmitter power supply unit e.g. FTC325, FTC625 (SW V1.4 or higher), FTC470Z, FTC471Z, FTL325N, FTL375N

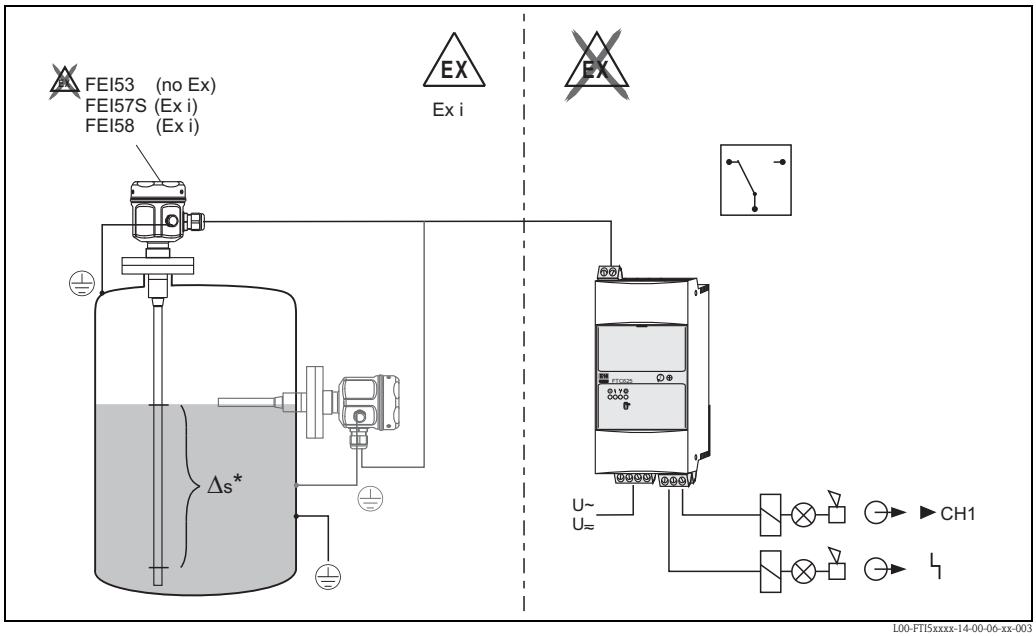

** Only possible with FEI53*

The following table shows the transmitter power supply units available which can be operated with electronic inserts FEI57S and FEI53.

Electronic insert Transmitter power supply unit	FEI57S	FEI53	FEI58
FTC625	x	–	–
FTC325	x	x	–
FTL325N	–	–	x
FTL375N	–	–	x
FTC470Z	x	–	–
FTC471Z	x	–	–
FTC520Z*	x	–	–
FTC521Z*	x	–	–
FTC420*	–	x	–
FTC421*	–	x	–
FTC422*	–	x	–

x Combination is possible
– Combination is not possible
* Product phase-out 2006

Point level switch 8/16 mA

The complete measuring system consists of:

- the point level switch, Solicap M FTI55 or FTI56
- the FEI55 electronic insert
- a transmitter power supply unit (e.g. RN221N, RNS221, RMA421, RMA422)

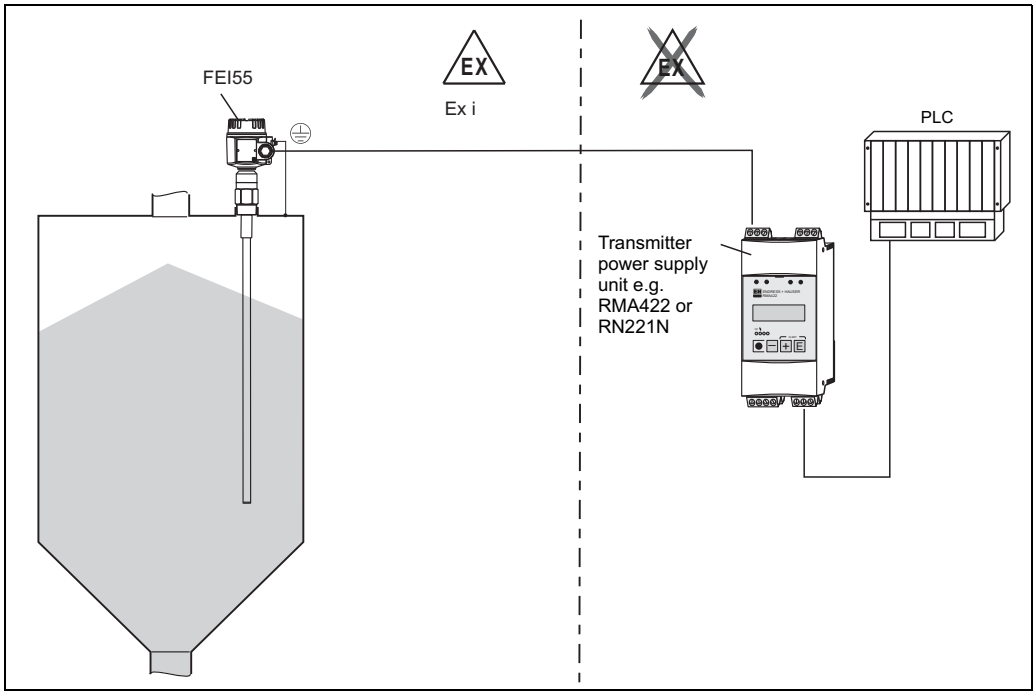

Electronic versions

FEI51
Two-wire AC connection

- Load switched directly into the power supply circuit via the thyristor.
- Point level adjustment directly at the point level switch.

FEI52
3-wire direct current version:

- Switch the load via the transistor (PNP) and separate supply voltage connection.
- Point level adjustment directly at the point level switch.

FEI53
3-wire direct current version with 3 to 12 V signal output:

- For separate switching unit, Nivotester FTC325 3–WIRE.
- Point level adjustment directly at the switching unit.

FEI54
Universal current version with relay output:

- Switch the loads via 2 floating changeover contacts (DPDT).
- Point level adjustment directly at the point level switch.

FEI55
Signal transmission 8/16 mA on two-wire cabling:

- SIL2 approval for the hardware
- SIL3 approval for the software
- For separate switching unit (e.g. RN221N, RNS221, RMA421, RMA422).
- Point level adjustment directly at the point level switch.

FEI57S
PFM signal transmission (current pulses are superimposed on the supply current):

- For separate switching unit with PFM signal transmission e.g. FTC325 PFM, FTC625 PFM and FTC470Z/471Z
- Self-test from the switching unit without changing levels.
- Point level adjustment directly at the point level switch.
- Cyclical checking from the switching unit.

FEI58 (NAMUR)
Signal transmission H-L edge 2.2 to 3.5 / 0.6 to 1.0 mA as per IEC 60947-5-6 on two-wire cable:

- For a separate switching unit (e.g. Nivotester FTL325N and FTL375N).
- Point level adjustment directly at the point level switch.
- Test the connection cables and slaves by pressing the button on the electronic insert.

Note!
For additional information see → 11 ff.

System integration via Fieldgate

Vendor managed inventory

The remote interrogation of tank or silo levels via Fieldgate enables suppliers of raw materials to gather information about the current inventories of their regular customers at any time and, for example, to take this into account in their own production planning. The Fieldgate monitors the configured point levels and automatically triggers the next order as required. Here, the range of possibilities ranges from simple requisitioning by e-mail through to fully automatic order processing by incorporating XML data into the planning systems on both sides.

Remote maintenance of measuring systems

Not only does Fieldgate transmit the current measured values, it also alerts the standby personnel responsible by e-mail or SMS as required. Fieldgate forwards the information transparently. In this way, all options of the operating software in question are available remotely. By using remote diagnosis and remote configuration some onsite service operations can be avoided and all others can at least be planned and prepared better.

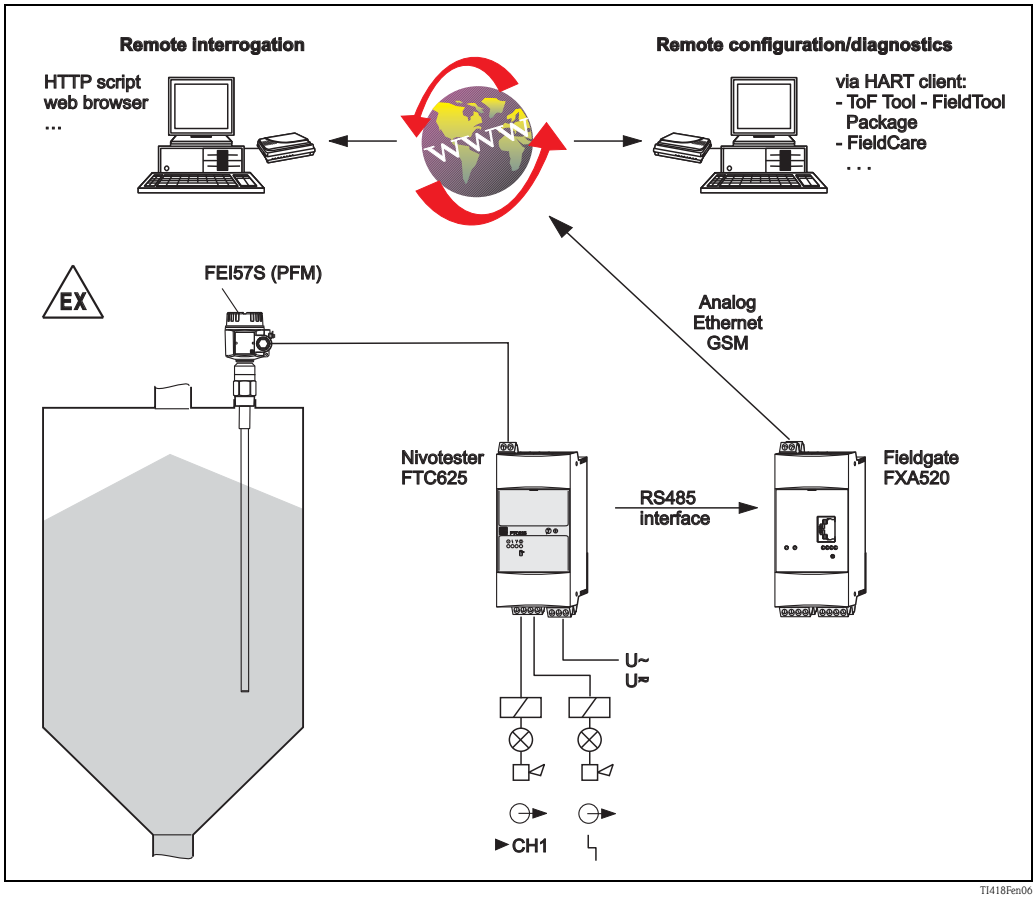

Input

Measured variable

Measurement of the change in capacitance between the probe rod and the tank wall, depending on the level of the bulk solids.

Measuring range (valid for all FEI5x)

- Measuring frequency:
  500 kHz
- Span:
  ΔC = 5 to 1600 pF
  ΔC = 5 to 500 pF (with FEI58)
- Final capacitance:
  C_E = max. 1600 pF
- Adjustable initial capacitance:
  C_A = 5 to 500 pF (range 1 = factory setting)
  C_A = 5 to 1600 pF (range 2; not with FEI58)

Input signal

Probe covered => high capacitance
Probe not covered => low capacitance

Measuring conditions

When installing in a nozzle, use inactive length (L3).
To control a screw conveyor (Δs mode), rod probes and rope probes can be used.
The on-value and off-value are determined by the empty and full calibration;
Partially insulated probes are only suitable for nonconductive bulk solids.

	DK	> 10	Measuring range up to 4 m
5 <	DK	< 10	Measuring range up to 12 m
2 <	DK	< 5	Measuring range up to 20 m

The minimum capacitance change for point level detection must be ≥ 5 pF.

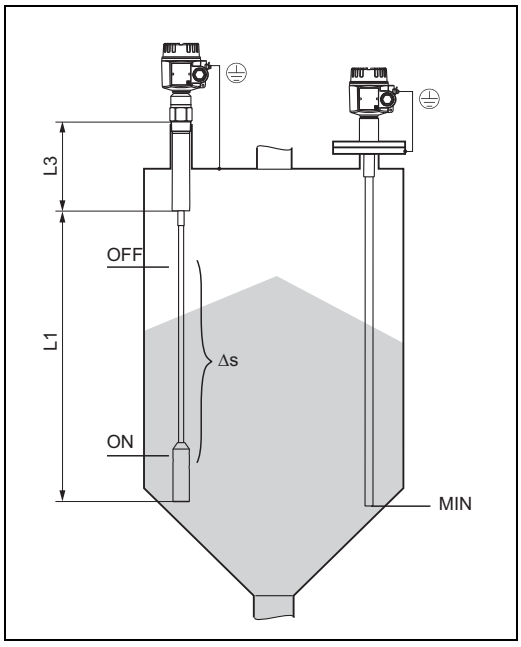

TI418F41

Minimum probe length for nonconductive media (<1µs/cm)

$l_{min} = \Delta C_{min} / (C_s * [\varepsilon r - 1])$

l_{min}	=	Minimum probe length
ΔC_{min}	=	5 pF
C_s	=	Probe capacitance in air
εr	=	Dielectric constant e.g. dried grain = 3.0

Output

Galvanic isolation	FEI51, FEI52 between rod probe and power supply FEI54: between rod probe, power supply and load FEI53, FEI55, FEI57S, FEI58 see connected switching device (functional galvanic isolation in the electronic insert)
Switch behavior	Binary or Δs operation (pump control, not with FEI58)
Switch-on behavior	When the power supply is switched on, the switching status of the outputs corresponds to the signal on alarm. The correct switch condition is reached after max. 3 seconds.
Fail-safe mode	Minimum/maximum quiescent current safety can be switched at the electronic insert (for FEI53 and FEI57S only at Nivotester FTCxxx) MAX = minimum safety: The output switches safety-oriented when the probe is uncovered (signal on alarm). For use for dry running protection and pump protection for example MAX = maximum safety: The output switches safety-oriented when the probe is covered (signal on alarm). For use with overfill protection for example
Switching delay	FEI51, FEI52, FEI54, FEI55 Can be adjusted incrementally at the electronic insert: 0.3 to 10 s FEI53, FEI57S Depends on the connected Nivotester (transmitter): FTC325, FTC625, FTC470Z or FTC471Z FEI58 Can be adjusted alternately at the electronic insert: 1 s / 5 s

Electronic insert FEI51 (AC 2-wire)

Connect in series with an external load.

Power supply

Supply voltage: 19 to 253 V AC
Power consumption: < 1.5 W
Residual current consumption: < 3.8 mA
Short-circuit protection
FEI51 overvoltage protection: overvoltage category II

Electrical connection

Always connect in series with a load!
Check the following:

- the residual current consumption in blocked state.
- that for low voltage:
  - the voltage drop across the load is such that the minimum terminal voltage at the electronic insert (19 V) when blocked is not undershot.
  - the voltage drop across the electronics when switched through is observed (up to 12 V).
- that a relay cannot de-energize with holding power below 1 mA.
  If this is the case, a resistor should be connected parallel to the relay (RC module available on request).

When selecting the relay, pay attention to the holding power / rated power
(see below: "Connectable load").

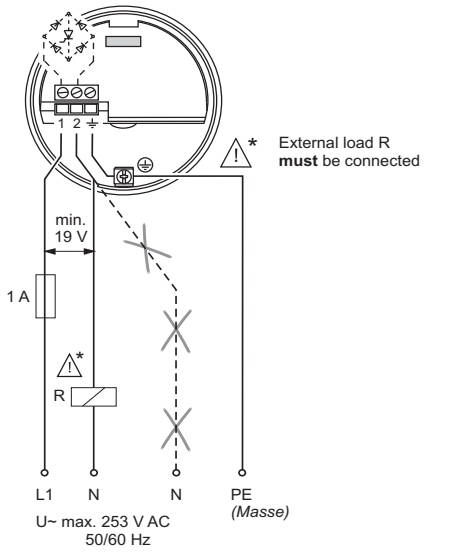

L00-FMI5xxxx-06-05-xx-en-071

Signal on alarm

Safety mode	Level	Output signal	LEDs gn gn rd gn gn ye
MAX		L+ 1 I_L + 3	● ● ● ● ●
		< 3,8 mA 1 - - - - - - → 3	● ● ● ● ●
MIN		L+ 1 I_L + 3	● ● ● ● ●
		< 3,8 mA 1 - - - - - - → 3	● ● ● ● ●
Maintenance required		I_L / < 3,8 mA 1 - - - - - - → 3	● ● ● ● ●
Instrument failure		< 3,8 mA 1 - - - - - - → 3	● ● ● ● ●

BA300Fen017

Output signal

Output signal on power failure or in the event of damage to the sensor: < 3.8 mA

Connectable load

- For relays with a minimum holding power or rated power > 2.5 VA at 253 V AC (10 mA) or > 0.5 VA at 24 V AC (20 mA)
- Relays with a lower holding power or rated power can be operated by means of an RC module connected in parallel.
- For relays with a maximum holding power or rated power < 89 VA at 253 V AC or < 8.4 VA at 24 V AC
- Voltage drop across FEI51 max. 12 V
- Residual current with blocked thyristor max. 3.8 mA
- Load switched directly into the power supply circuit via the thyristor.

FEI52 electronic insert (DC PNP)

Power supply

Supply voltage: 10 to 55 V DC
Ripple: max. 1.7 V, 0…400 Hz
Current consumption: < 20 mA
Power consumption without load: max. 0.9 W
Power consumption with full load (350 mA): 1.6 W
Reverse polarity protection: yes
Separation voltage: 3.7 kV
FEI52 overvoltage protection: overvoltage category II

Electrical connection

Three-wire DC connection

Preferably in conjunction with programmable logic controllers (PLC),
DI modules in accordance with EN 61131-2.

Positive signal present at the switch output of the electronic system (PNP).

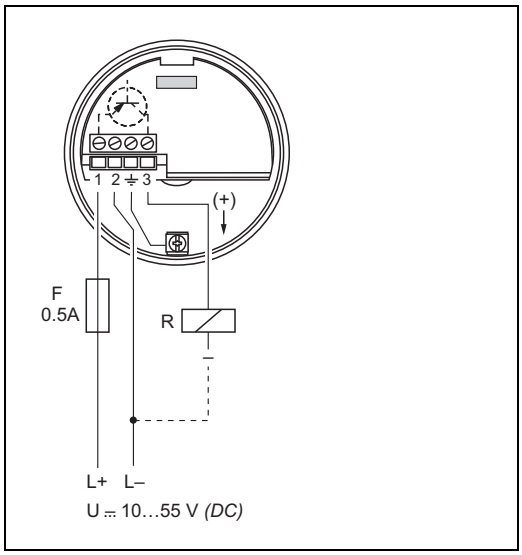

TI418F42

Output signal

Safety mode	Level	Output signal	LEDs gn gn rd gn gn ye
MAX		L+ 1 → I_L → + 3	☼ ● ● ● ● ☼
		1 - - - I_R - - - → 3	☼ ● ● ● ● ●
MIN		L+ 1 → I_L → + 3	☼ ● ● ● ● ☼
		1 - - - I_R - - - → 3	☼ ● ● ● ● ●
Maintenance required		1 - - - I_L / I_R - - - → 3	☼ ● ☼ ● ●
Instrument failure		1 - - - I_R - - - → 3	☼ ● ☼ ● ● ●

TI418Fen43

I_L = Load current (switched through)
I_R = Residual current (blocked)

☼ Lit
☼ Flashes
● Unlit

TI418F44

Signal on alarm

Output signal on power failure or in the event of device failure: I_R < 100 µA

Connectable load

- Load switched via transistor and separate PNP connection, max. 55 V
- Load current max. 350 mA (cyclical overload and short-circuit protection)
- Residual current < 100 µA (with transistor blocked)
- Capacitance load max. 0.5 µF at 55 V; max. 1.0 µF at 24 V
- Residual voltage < 3 V (for transistor switched through)

Electronic insert FEI53 (3-wire)

Power supply

Supply voltage: 14.5 V DC
Current consumption: < 15 mA
Power consumption: max. 230 mW
Reverse polarity protection: yes
Separation voltage: 0.5 kV

Electrical connection

Three-wire DC connection

3 to 12 V signal

For connecting to the switching unit, Nivotester FTC325 3–WIRE from Endress+Hauser.

Switching between minimum/maximum Safety in the Nivotester FTC325 3-WIRE.

Point level adjustment directly at the Nivotester.

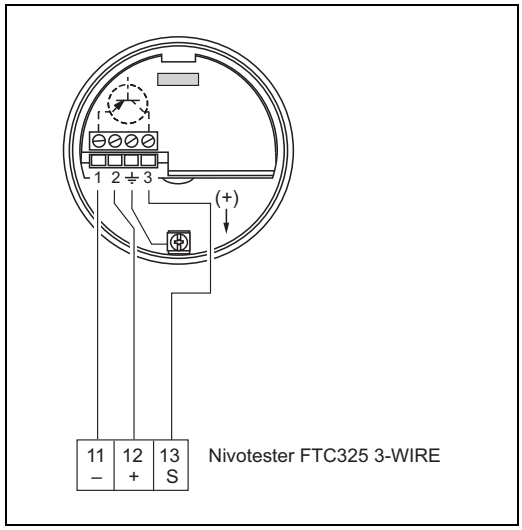

TI418F45

Output signal

Mode	Output signal	LEDs green	LEDs red
Normal operation	3...12 V at terminal 3	☼	●
Maintenance required *	3...12 V at terminal 3	☼	☼
Instrument failure	< 2,7 V at terminal 3	☼	☼

TI418Fen46

☼ Lit
☼ Flashes
● Unlit

TI418F44

Signal on alarm

Voltage at terminal 3 vis-à-vis terminal 1: < 2.7 V

Connectable load

- Floating relay contacts in the connected switching unit Nivotester FTC325 3–WIRE
- For the contact load capacity, refer to the technical data of the switching device.

FEI54 electronic insert (AC/DC with relay output)

Power supply

Supply voltage: 19 to 253 V AC, 50/60 Hz or 19 to 55 V DC
Power consumption: max. 1.6 W
Reverse polarity protection: yes
Separation voltage: 3.7 kV
FEI54 overvoltage protection: overvoltage category II

Electrical connection

Universal current connection with relay output (DPDT)

Power supply:
Please note the different voltage ranges for AC and DC.

Output:
When connecting an instrument with high inductance, provide a spark arrester to protect the relay contact.
A fine-wire fuse (depending on the load connected) protects the relay contact on short-circuiting.
Both relay contacts switch simultaneously.

* See below "Connectable load"

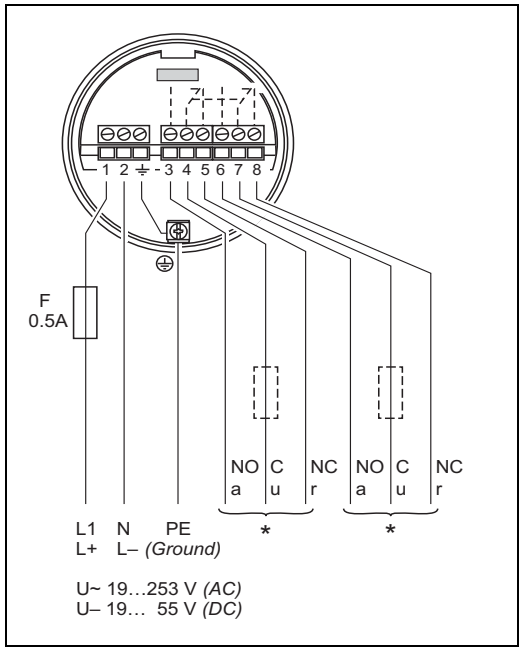

TI418F47

Output signal

Safety mode	Level	Output signal	LEDs gn gn rd gn gn ye
MAX		3 4 5 6 7 8	☼ ● ● ● ● ☼
		3 4 5 6 7 8	● ● ● ● ● ●
MIN		3 4 5 6 7 8	☼ ● ● ● ● ☼
		3 4 5 6 7 8	● ● ● ● ● ●
Maintenance required			☼ ● ☼ ● ● ●
Instrument failure		3 4 5 6 7 8	● ☼ ● ● ●

TI418Fen48

Relay energized
Relay de-energized
Lit
Flashes
Unlit

TI418F49

Signal on alarm

Output signal on power failure or in the event of device failure: relay de-energized

Connectable load

- Loads switched via 2 floating changeover contacts (DPDT)
- I~ max. 6 A, U~ max. 253 V; P~ max. 1500 VA at cos φ = 1, P~ max. 750 VA at cos φ > 0.7
- I– max. 6 A to 30 V, I– max. 0.2 A to 125 V
- The following applies when connecting a functional low-voltage circuit with double isolation as per IEC 1010: Sum of voltages of relay output and power supply max. 300 V

Electronic insert FEI55 (8/16 mA; SIL2/SIL3)

Power supply

Supply voltage: 11 to 36 V DC
Power consumption: < 600 mW
Reverse polarity protection: yes
Separation voltage: 0.5 kV

Electrical connection

Two-wire connection for separate switching unit

For connecting to
programmable logic controllers (PLC),
AI modules 4 to 20 mA in accordance with
EN 61131-2.

The point level signal is sent via an output signal jump from 8 mA to 16 mA.

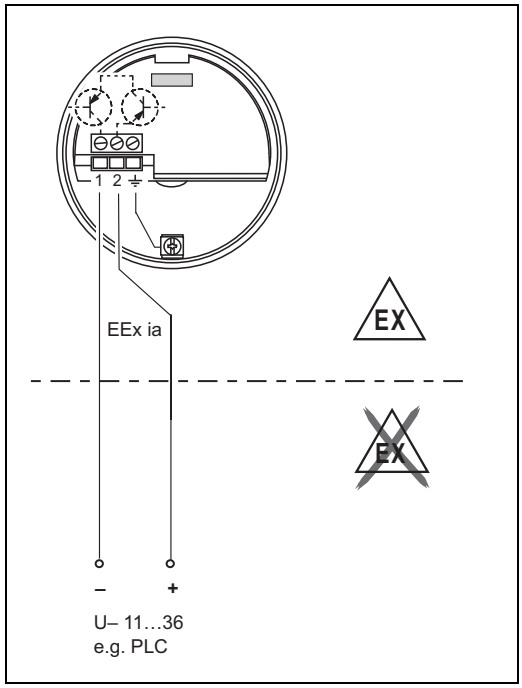

TI418Fen50

Output signal

Safety mode	Level	Output signal	LEDs gn gn rd gn gn ye
MAX		+ 2 ~16 mA 1	☼ ● ● ● ● ☼
		+ 2 ~8 mA 1	☼ ● ● ● ● ●
MIN		+ 2 ~16 mA 1	☼ ● ● ● ● ☼
		+ 2 ~8 mA 1	☼ ● ● ● ● ●
Maintenance required *		+ 2 8/16 mA 1	☼ ● ☼ ● ● ●
Instrument failure		+ 2 < 3.6 mA 1	☼ ● ☼ ● ● ●

TI418Fen51

~16 mA = 16 mA ± 5 %
~ 8 mA = 8 mA ± 6 %

☼ Lit
☼ Flashes
● Unlit

TI418F44

Signal on alarm

Output signal on power failure or in the event of device failure: < 3.6 mA

Connectable load

- U = Connection DC voltage:
  - 11 to 36 V DC (non-hazardous area and Ex ia)
  - 14.4 to 30 V DC (Ex d)
- I_{max} = 16 mA

FEI57S electronic insert (PFM)

Power supply

Supply voltage:
9.5 to 12.5 VDC
Power consumption: < 150 mW
Reverse polarity protection: yes
Separation voltage: 0.5 kV

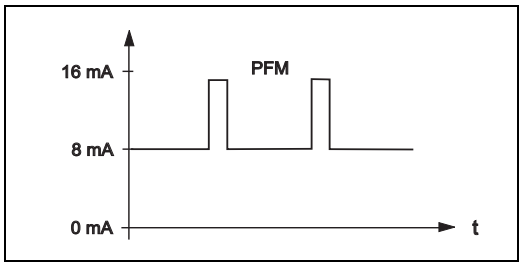

Frequency: 17 to 185 Hz

Electrical connection

Two-wire connection for separate switching unit

For connecting to switching units Nivotester FTC325, FTC625, FTC470Z, FTC471Z from Endress+Hauser.

PFM signal 17 to 185 Hz

Switching between minimum/maximum safety in the Nivotester.

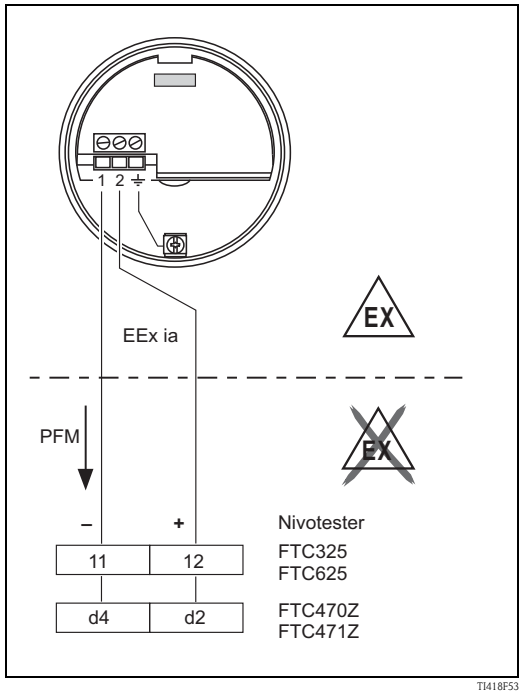

Output signal

PFM 60 to 185 Hz (Endress+Hauser)

Signal on alarm

Mode	Output signal	LEDs green	LEDs red
Normal operation	60...185 Hz 1 ------> 2	☼	●
Maintenance required *	60...185 Hz 1 ------> 2	☼	☼
Instrument failure	< 20 Hz 1 ------> 2	☼	☼

TI418Fen54

☼ Lit
☼ Flashes
● Unlit

TI418F44

Connectable load

- Floating relay contacts in the connected switching unit Nivotester FTC325, FTC625, FTC470Z, FTC471Z
- For the contact load capacity, refer to the technical data of the switching device.

Electronic insert FEI58 (NAMUR H-L edge)

Power supply

Power consumption: < 6 mW at I < 1 mA; < 38 mW at I = 2.2 to 4 mA
Interface connection data: IEC 60947-5-6

Electrical connection

Two-wire connection for separate switching unit

For connecting to isolating amplifiers as per NAMUR (IEC 60947-5-6), e.g. FXN421, FXN422, FTL325N, FTL375N from Endress+Hauser.
Change in output signal from high to low current in event of point level detection.

(H-L edge)

Additional function:
Test key on the electronic insert.
Pressing the key interrupts the connection to the isolating amplifier.

Note! In the case of Ex-d operation, the additional function can only be used if the housing is not exposed to an explosive atmosphere.

Connection to Multiplexer: set 3 s as the cycle time at least.

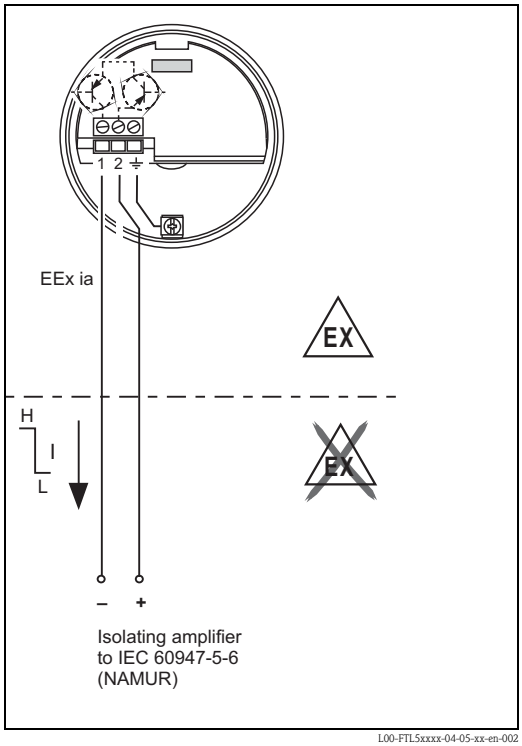

L00-FTL5xxxx-04-05-xx-en-002

Output signal

= Lit
= Flashes
= Unlit

L00-FTL5xxxx-07-05-xx-xx-002

Fail-safe mode	Level	Output signal	LEDs green	LEDs yellow
Max.		2.2 … 3.5 mA		
		0.6 … 1.0 mA		●
Min.		2.2 … 3.5 mA		
		0.6 … 1.0 mA		●

L00-FTL5xxxx-04-05-xx-xx-007

Signal on alarm

Output signal in the event of damage to the sensor: < 1.0 mA

Connectable load

- See the technical data of the connected isolating amplifier as per IEC 60947-5-6 (NAMUR)
- Connection also to isolating amplifiers which have special safety circuits (I > 3.0 mA)

Power supply

Electrical connection

Connection compartment

Five housings with the following protection classes are available:

Housing	Standard	EEx ia	EEx d	Gas-tight process seal
Polyester housing F16	X	X	–	–
Stainless steel housing F15	X	X	–	–
Aluminum housing F17	X	X	–	–
Aluminum housing F13	X	X	X	X
Aluminum housing T13 (with separate connection compartment)	X	X	X	X

Connector

For the version with a connector M12, the housing does not have to be opened for connecting the signal line.

PIN assignment for M12 connector

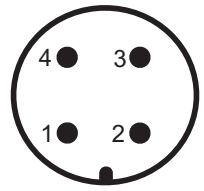

L00-FTI5xxxx-04-06-xx-xx-015

PIN	2-wire-electronic insert FEI55, FEI57, FEI58, FEI50H, FEI57C	3-wire-electronic insert FEI52, FEI53
1	+	+
2	not used	not used
3	–	–
4	ground	external load / signal

Cable entry

- Cable gland: M20x1.5 (for EEx d only cable entry M20)
  Two cable glands included in scope of delivery.
- Cable entry: G ½, NPT ½ and NPT ¾

Performance characteristics

Reference operating conditions

- Temperature: +20 °C ±5 °C
- Pressure: 1013 mbar abs. ±20 mbar
- Humidity: 65 % ±20%
- Medium: water from mains (conductivity ≥ 180 µS/cm)

Switch point

- Uncertainty as per DIN 61298-2: max ±0.3%
- Non-repeatability (reproducibility) as per DIN 61298-2: max. ±0.1 %

Ambient temperature effect

Electronic insert
< 0.06 % / 10 K related to the full scale value

Separate housing
Capacitance change of connecting cable per meter 0.15 pF/10K

Installation

All dimensions in mm!

General notes

Filling the silo
The filling stream should not be directed onto the probe.

Angle of material flow
Note the expected angle of the material flow or of the outlet funnel when determining the mounting location or probe length.

Distance between probes
When installing several probes in a silo, a minimum distance of 0.5 m between the probes must be observed.

Threaded coupling for mounting
When installing the Solicap M FTI55, FTI56, the threaded coupling should be as short as possible.
Condensation or product residue may occur in a long threaded coupling and interfere with the correct operation of the probe.

Heat insulation
In the event of high temperatures in the silo:
Insulate the external silo wall to avoid exceeding the permitted temperature of the Solicap M housing.
Heat insulation also prevents condensation from forming near the threaded boss in the silo.
This reduces buildup and the risk of error switching.

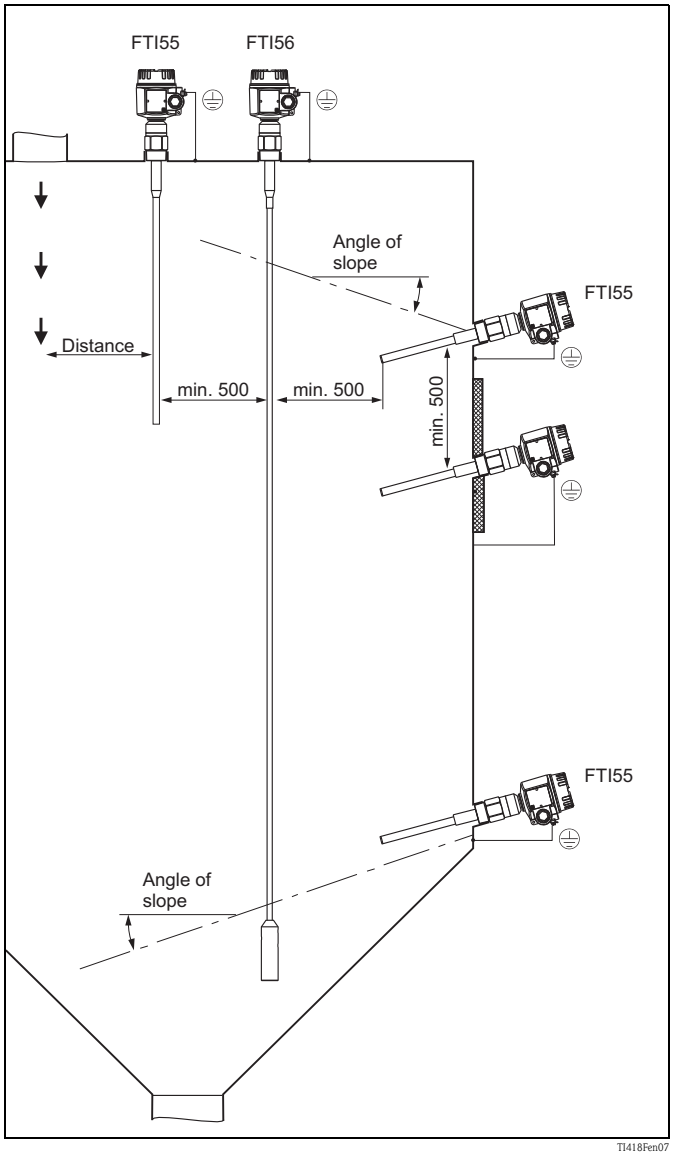

Preparing to install rod probes FTI55

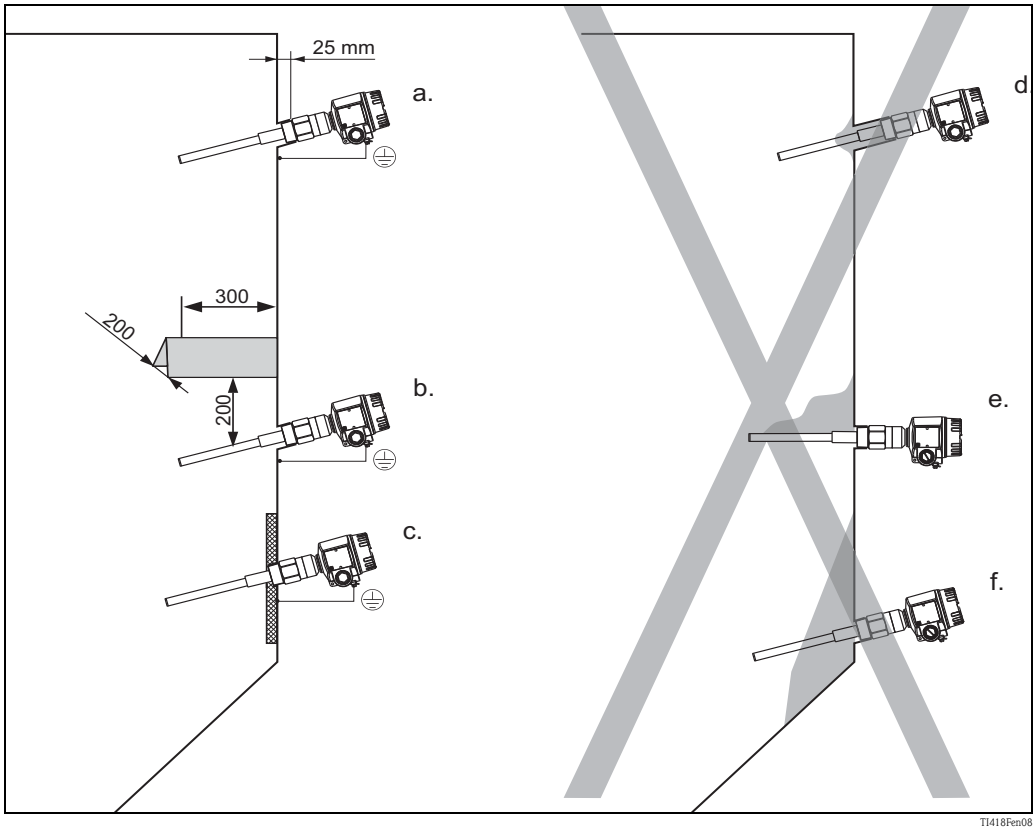

Correct installation

a. For maximum point level detection, a short threaded coupling is used.

b. For minimum point level detection, a short threaded coupling is used.
The probe tip points slightly downwards so that bulk solids slide off more easily.
The protective cover protects the probe rod from collapsing mounds or mechanical strain at the outflow.

c. In the event of light buildup on the silo wall, the threaded coupling is welded internally.
The probe tip points slightly downwards so that bulk solids slide off more easily.

Incorrect installation

d. The threaded coupling is too long. This may cause material to settle inside and result in error switching.

e. Horizontal mounting means a risk of error switching in the event of heavy buildup on the silo wall.
In this case, the Solicap M FTI55 (rod probe) with inactive length is recommended.

f. In areas where product buildup occurs, the device cannot detect if the silo is "empty".
In this case, the FTI56 (rope probe) should be installed from above.

In this example, the grounded steel plate forms the counter electrode.
Heat insulation prevents condensation and therefore buildup on the steel plate.

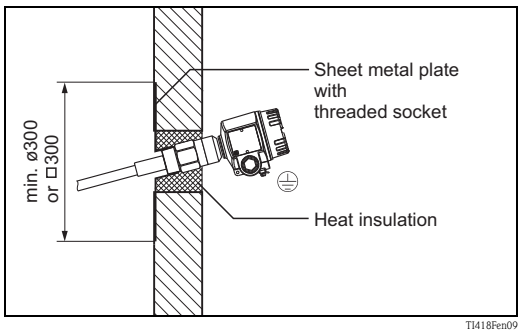

In a silo with concrete walls

When installing in a silo made of plastic, a sheet metal plate must be attached to the exterior of the silo as a counter electrode.
This plate can be either square or round.

– Dimensions in the case of a thin silo wall with a low dielectric constant:
  approx. 0.5 m along each side or ø0.5 m;
– Dimensions in the case of a thicker silo wall or wall with a higher dielectric constant:
  approx. 0.7 m along each side or ø0.7 m.

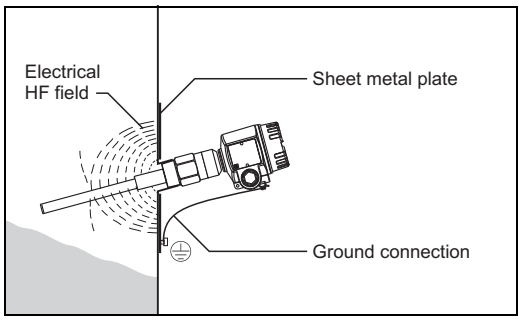

In a silo with plastic walls

Probe length and minimum coverage

Note!

- When selecting the probe length, pay attention to the dependency between the relative dielectric constant ε_r and the minimum amount the probe rod needs to be covered (see Table).
- For probe length tolerances see → 📄 36.
- To ensure problem-free operation, it is important that the difference in capacitance between the covered and uncovered parts of the probe is at least 5 pF.
- If you do not know the dielectric constant of the material, contact us for advice.

Product properties, relative dielectric constant ε_r	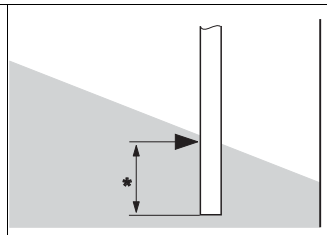 * *Minimum coverage*
Electrically conductive	25 mm
Nonconductive	
ε_r > 10	100 mm
ε_r > 5 to 10	200 mm
ε_r > 2 to 5	500 mm

Preparing to install rope probes FTI56

Correct installation **Incorrect installation**

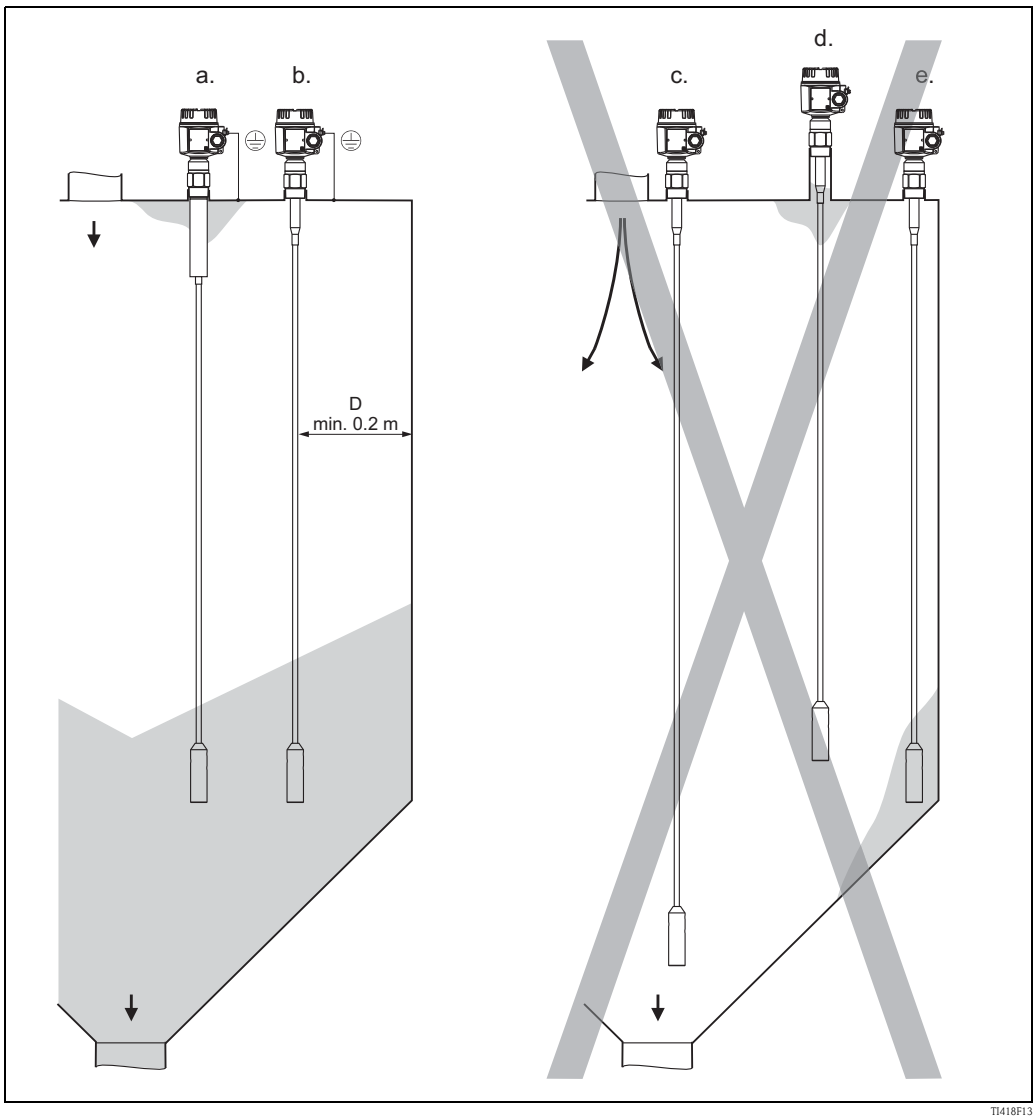

In a silo with metal walls
Distance D between the probe and the wall approx. 10 to 25 % of the silo diameter

Correct installation

a. Solicap M FTI55, FTI56 with inactive length in the event of condensation and material buildup on the silo roof.

b. At the correct distance from the silo wall, the material inlet and the material outlet.
Close to the wall, for reliable switching in the case of a low dielectric constant (not for pneumatic filling).
For pneumatic filling, the distance from the probe to the wall should not be too short, as the probe may swing.

Incorrect installation

c. If too close to the material inlet, inflowing bulk solids may damage the sensor.
If close to the center of the material outflow, high tensile forces at this point may cause the probe to break off or subject the silo roof to excessive strain.

d. The threaded coupling is too long. This may cause condensation and dust to settle inside which may result in error switching.

e. If too close to the silo wall, the probe may swing slightly against the wall or come in contact with buildup. This can result in error switching.

Silo roof

Ensure that the silo roof is of a sufficiently stable construction.

High tensile forces may occur when material is being extracted, particularly in the case of heavy and powdery bulk solids which have a tendency to form buildup.

Coarse-grained bulk solids

In silos with extremely coarse-grained or extremely abrasive bulk solids, the use of a Solicap M FTI55 or FTI56 is recommended only for maximum detection.

Distance between the rope probes

To rule out mutual probe interference, you must maintain a minimum distance of 0.5 m between the rope probes. This also applies if you are installing several Solicap M units in adjacent silos with nonconductive walls.

In the event of condensation:

Use the Solicap M with inactive length.
The inactive length (**A**) prevents moisture and buildup forming between the active part of the probe and the silo roof.

Or:
To reduce the effects of condensation (**B**) and buildup, the threaded coupling (length: max. 25 mm) must project into the silo.
Heat insulation reduces condensation and therefore buildup on the steel plate.

A

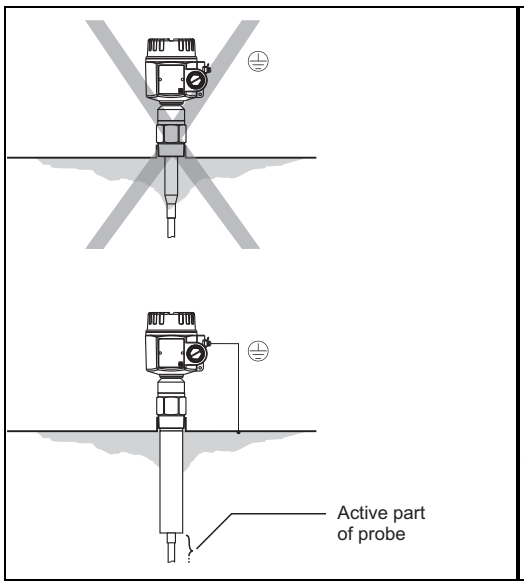

Silo with walls that conduct electricity

B

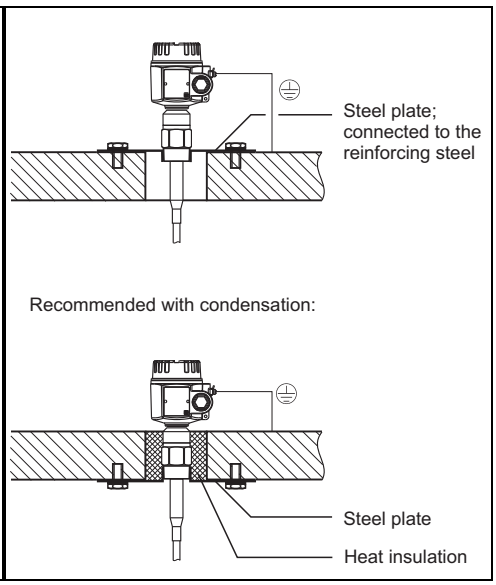

Silo with concrete walls

Installation in the event of buildup

If buildup on the probe rod can be expected when operating the measuring system, the active buildup compensation function prevents the measurement result from becoming distorted. No cleaning work has to be performed on the probe rod.

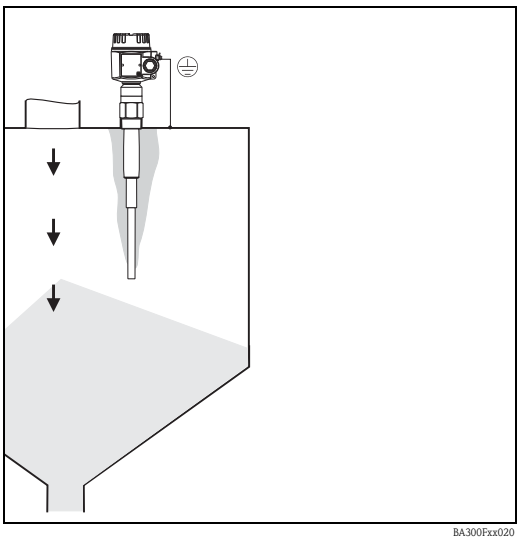

BA300Fxx020

Installation in plastic tanks

When installing in a silo made of plastic, a counter electrode must be mounted on the silo exterior at the same height as the tensioning weight.
The length of the edge of the counter electrode should be approximately the same length as the distance between the tensioning weight and the silo wall.

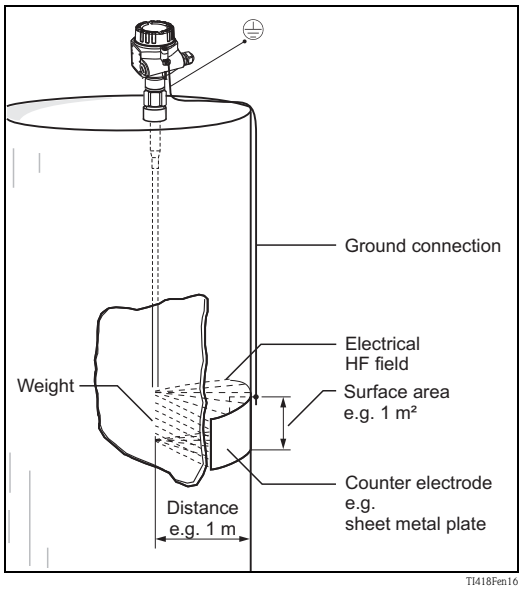

TI418Fen16

In a silo with plastic walls

Range of sensor lengths

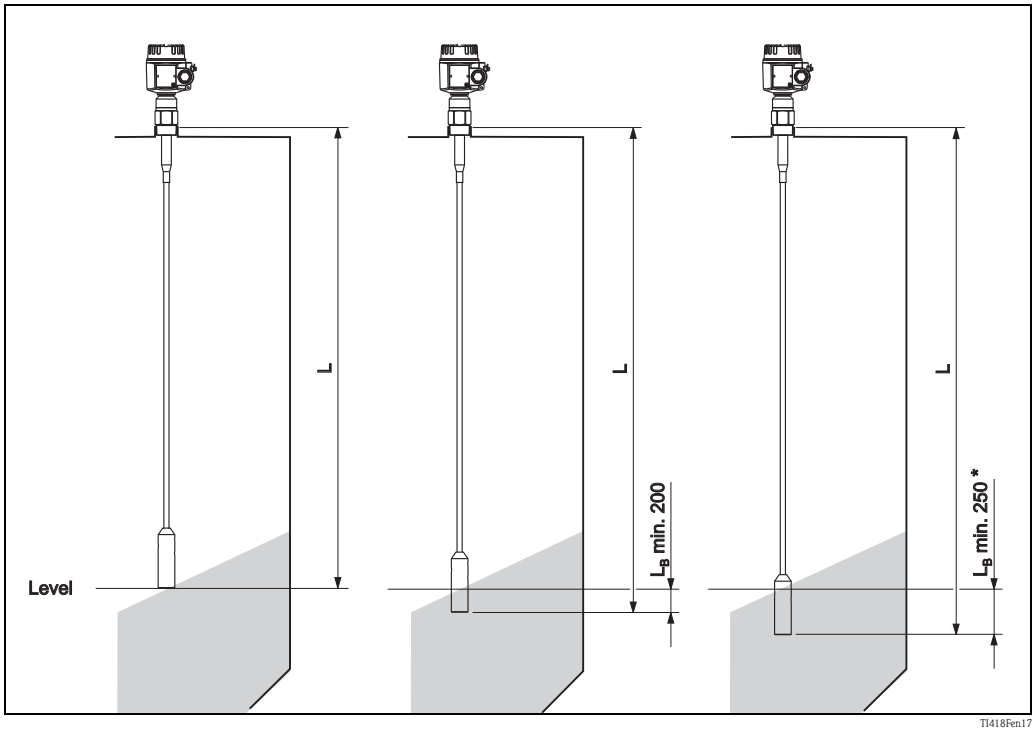

Electrically conductive bulk solids (e.g. coal)	Bulk solids with high dielectric constant (e.g. rock salt)	Bulk solids with low dielectric constant (e.g. dried grain)

* L_B (covered length):
For nonconductive bulk solids with a low dielectric constant, the rope probe must be approx. 5 % (but no less than 250 mm) longer than the distance between the tank roof and the required point level.

Shortening the probe

Rod probe:
The partially insulated version can be shortened at a later stage by the user.

Rope probe:
Both versions (partially and fully insulated) may be shortened at a later stage.

Probe with separate housing

- For information on how to order, see also "Ordering information" from → 📄 42 under "Probe design".
- The maximum connection length between the probe and the separate housing is 6 m (L4). When ordering a Solicap M with a separate housing, the desired length must be specified.
- If the connecting cable is to be shortened or passed through a wall, it must be separated from the process connection. See also → 📄 26 (extension heights).
- The cable has a bending radius of r ≥ 100 mm. This must be observed as a minimum.

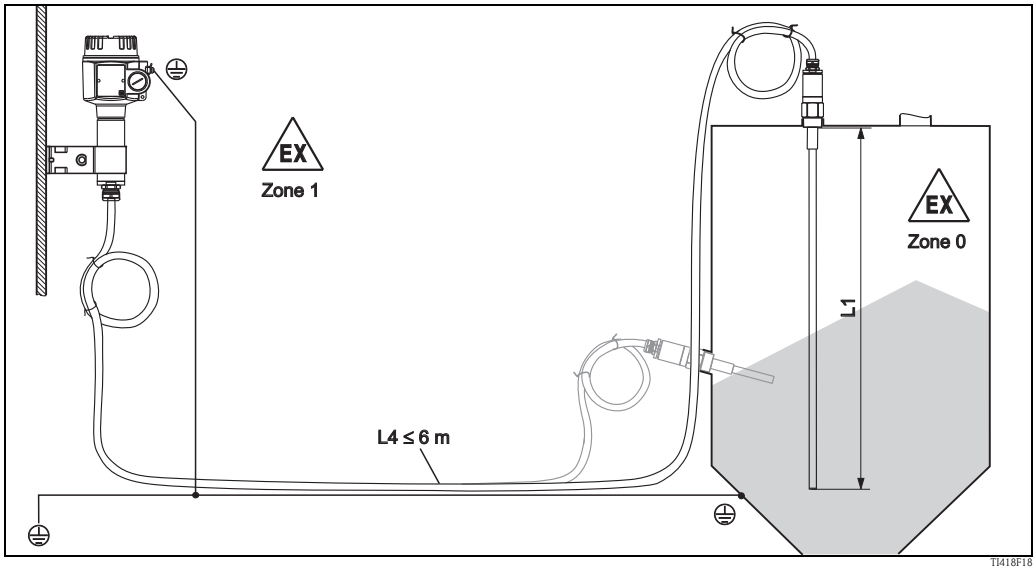

Rod length L1 max. 4 m
Rope length L1 max. 19.7 m (the maximum total length of L1 + L4 should not exceed 20 m.)

Extension heights

Housing side: wall mounting | Housing side: pipe mounting | Sensor side

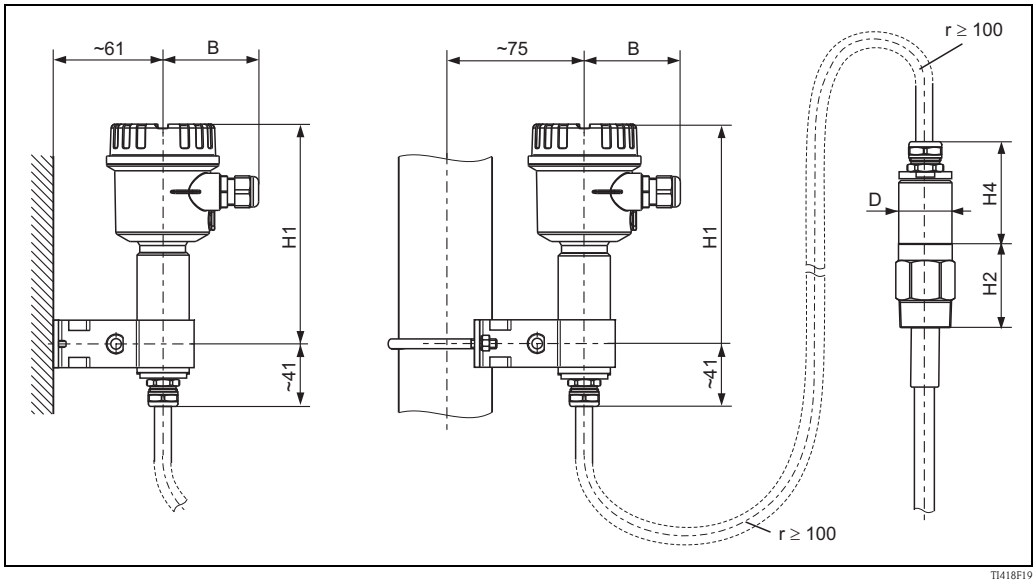

		Polyester housing F16	Stainless steel housing F15	Aluminum housing F17
B	-	76	64	65
H1	-	172	166	177
D	50	-	-	-
H4	62	-	-	-

Connecting cable: ø10.5 mm
Outer jacket: silicone, notch-resistant

Wall holder unit

The wall holder unit is part of the scope of supply.
The wall holder unit has to be screwed to the separate housing before you can use it as a drilling template. The distance between the holes is reduced by screwing it to the separate housing.

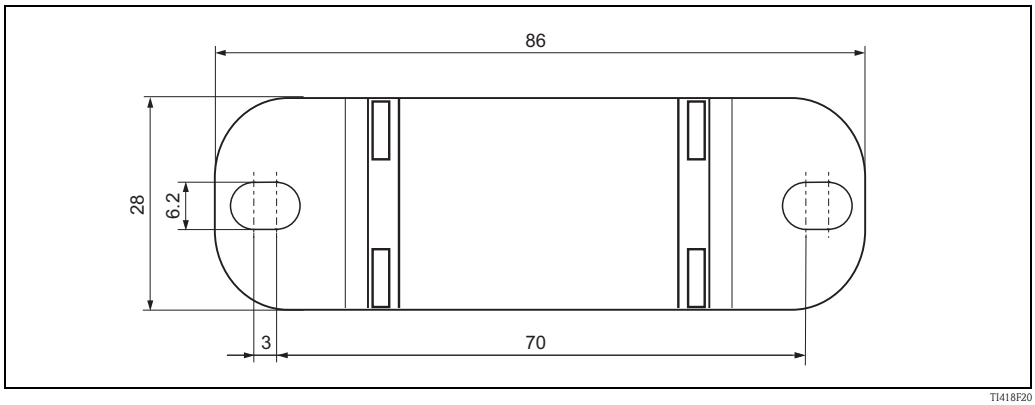

Temperature-derating separate housing

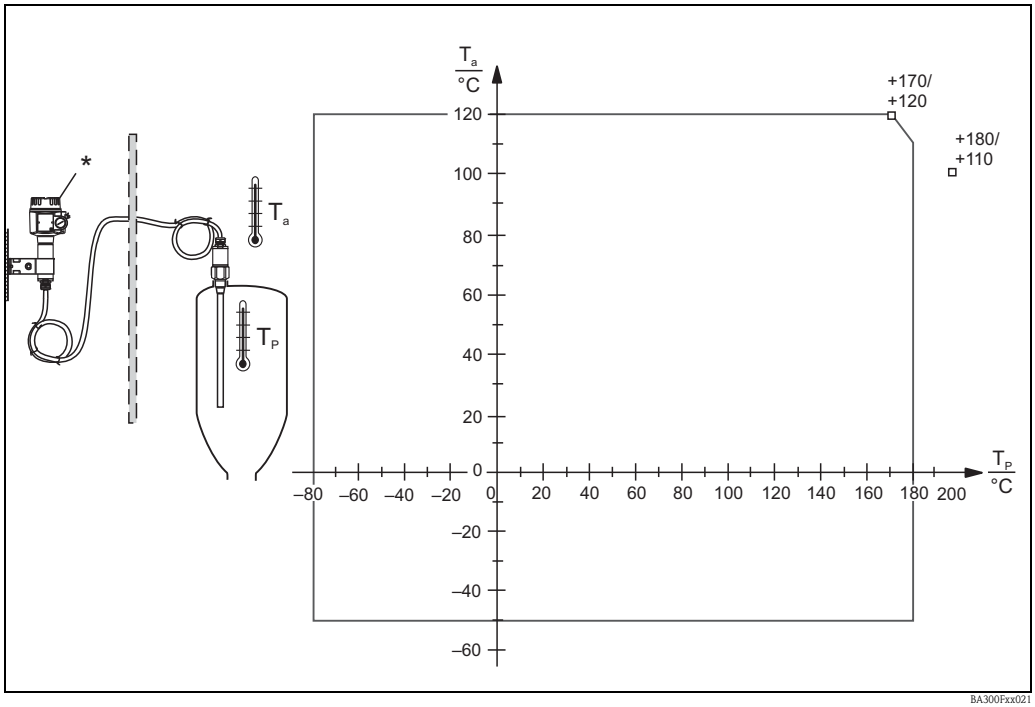

T_a: ambient temperature
T_P: process temperature
** temperature at separate housing ≤ 70 °C*

The maximum connection length between the probe and the separate housing is 6 m (L4). When ordering a device with a separate housing, the desired length must be specified.
If the connecting cable is to be shortened or passed through a wall, it must be separated from the process connection. See "Documentation" => "Operating Instructions" on → 47.

Operating conditions: Environment

Ambient temperature range

- Ambient temperature of the transmitter (note derating, see → 📄 29):
  - ❑ –50 to +70 °C
  - ❑ –40 to +70 °C (with F16 housing)
- A weather protection cover should be used when operating outdoors in strong sunlight. For further information on the weather protection cover, see → 📄 46.

Storage temperature

–50 to +85 °C

Climate class

DIN EN 60068-2-38/IEC 68-2-38: test Z/AD

Degree of protection

	IP66*	IP67*	IP68*	NEMA4X**
Polyester housing F16	X	X	-	X
Stainless steel housing F15	X	X	-	X
Aluminum housing F17	X	X	-	X
Aluminum housing F13 with gas-tight process seal	X	–	X***	X
Aluminum housing T13 with gas-tight process seal and separate connection compartment (EEx d)	X	–	X***	X
Separate housing	X	–	X***	X

* As per EN60529
** As per NEMA 250
*** Only with M20 cable entry or G1/2 thread

Vibration resistance

DIN EN 60068-2-64/IEC 68-2-64: 20 Hz– 2000 Hz; 0.01 g^2/Hz

Cleaning

Housing:
When cleaning, make sure that the cleaning agent used does not corrode the housing surface or the seals.

Probe:
Depending on the application, buildup (contamination and soiling) can form on the probe rod. A high degree of material buildup can affect the measurement result. If the medium tends to create a high degree of buildup, regular cleaning is recommended. When cleaning, it is important to make sure that the insulation of the probe rod is not damaged. If cleaning agents are used make sure the material is resistant to them!

Electromagnetic compatibility (EMC)

- Interference emission to EN 61326, Electrical Equipment Class B
  Interference immunity in accordance with EN 61326, Appendix A (Industrial) and NAMUR Recommendation NE 21 (EMC)
- A usual commercial instrument cable can be used.

Shock resistance

DIN EN 60068-2-27/IEC 68-2-27: 30g acceleration

Operating conditions: Process

Process temperature range

The following process temperature ranges only apply for standard applications outside hazardous areas. Regulations for use in hazardous areas are provided in the Supplementary Documentation XA00389F/00. Permitted ambient temperature T_a at the housing depending on the process temperature T_p in the tank.

Rod probe FTI55

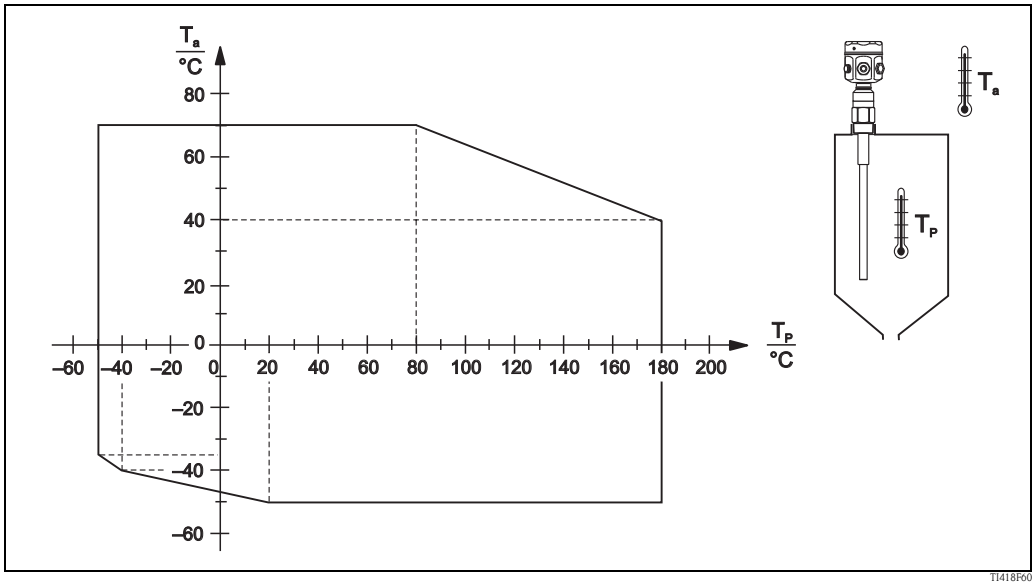

Partially insulated (PPS):

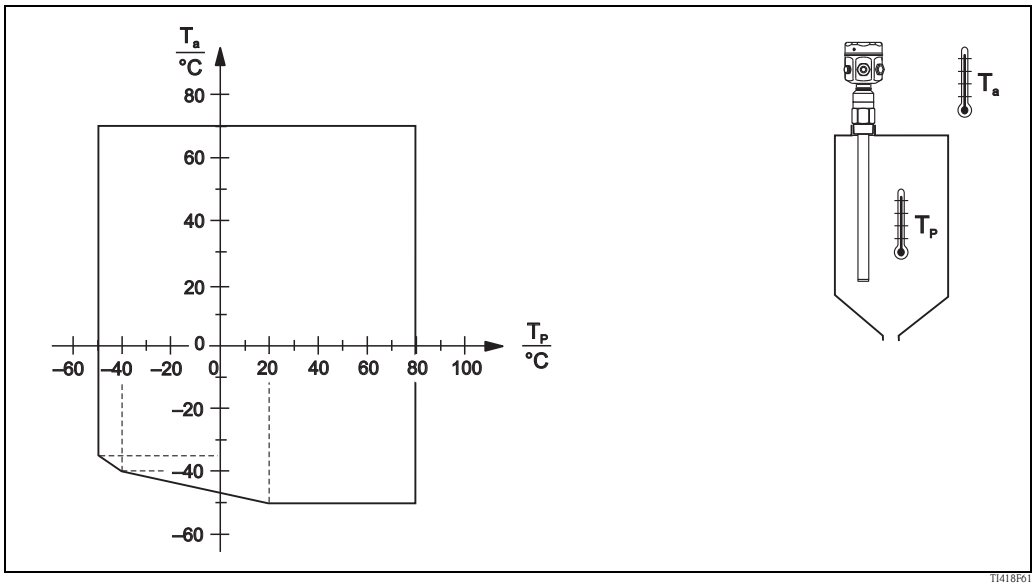

Fully insulated (PE):

Note! Restriction to T_a –40 °C for polyester housing F16.

Rope probe FTI56

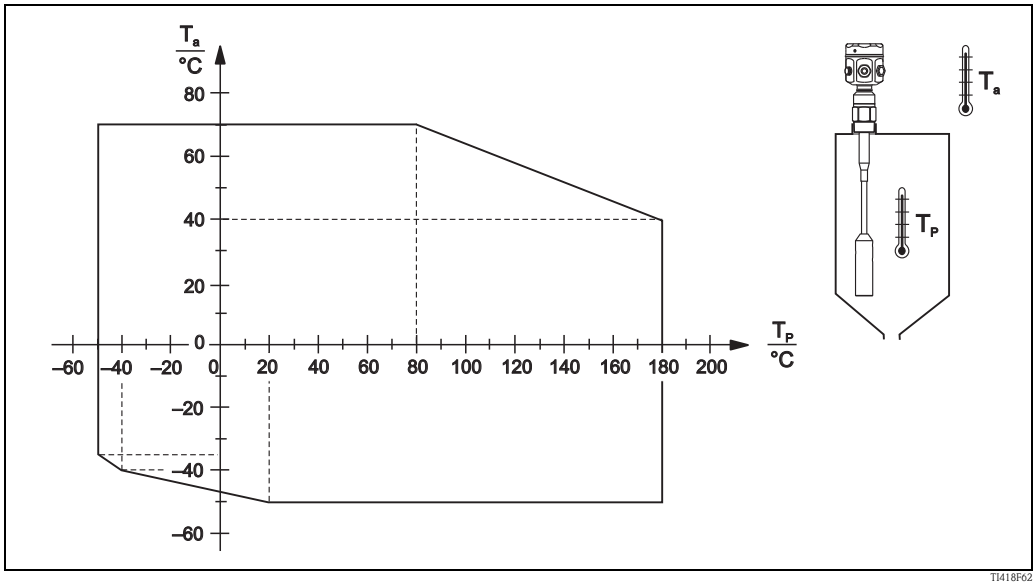

Partially insulated (PTFE):

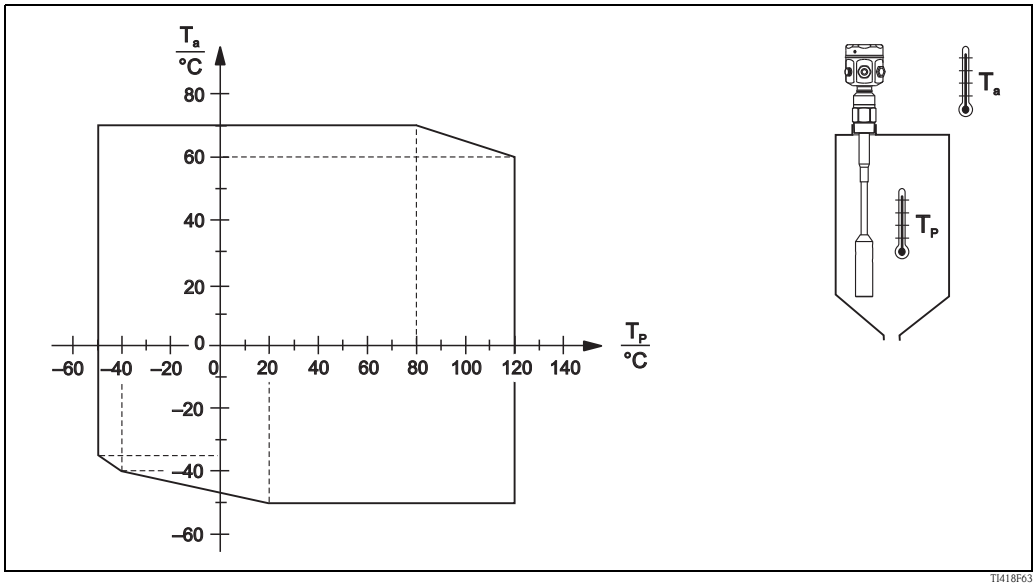

Fully insulated (PA):

Process pressure and temperature derating

The lowest value from the derating curves of the device and the selected flange applies.
In the case of flange process connections, the maximum pressure is limited by the nominal pressure of the flange.
See also "Process connections" on → 35.

Rod probe FTI55

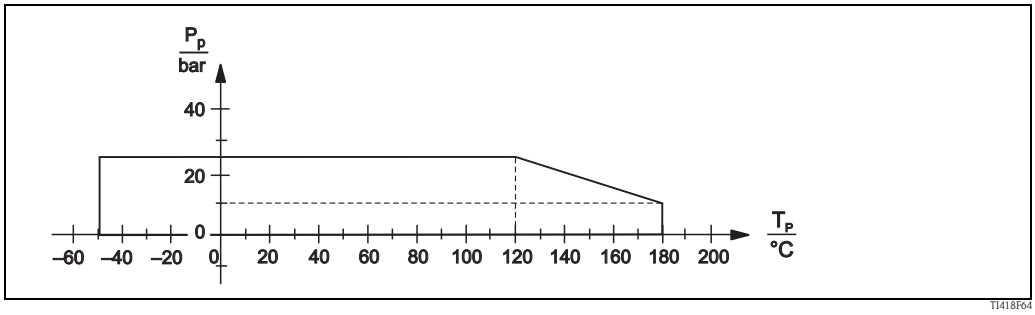

Partially insulated (PPS):

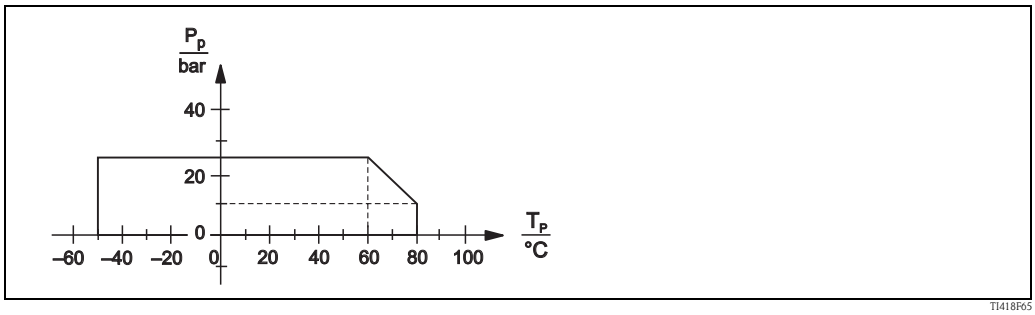

Fully insulated (PE):

Rope probe FTI56

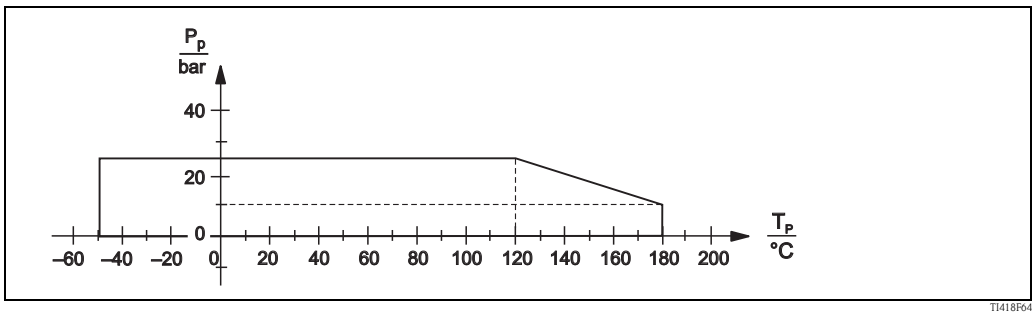

Partially insulated (PTFE):

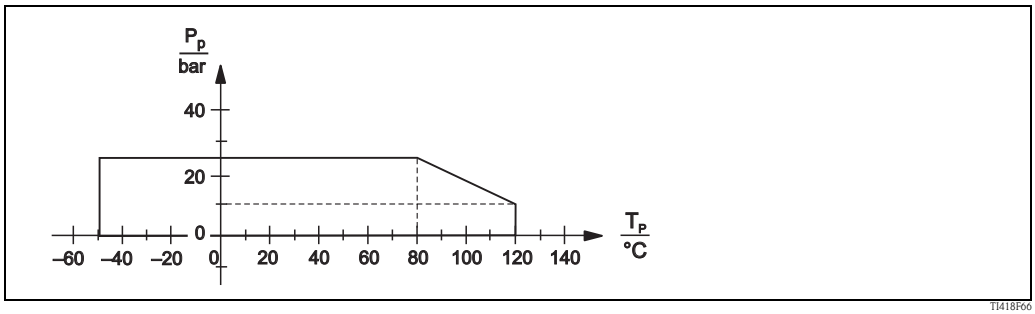

Fully insulated (PA):

Process pressure limits

–1 to 25 bar
(observe dependencies => process connections from → 35 and operating conditions: process from → 29.)
The lowest value from the derating curves of the device and the selected flange applies.
Please refer to the following standards for the pressure values permitted at higher temperatures:

- pR EN 1092-1: 2005 Table, Appendix G2
  With regard to its resistance/temperature property, the material 1.4435 is identical to 1.4404 (AISI 316L) which is grouped under 13E0 in EN 1092-1 Tab. 18. The chemical makeup of the two materials can be identical.
- ASME B 16.5a - 1998 Tab. 2-2.2 F316
- ASME B 16.5a - 1998 Tab. 2.3.8 N10276
- JIS B 2220

State of aggregation

See → 4, "Application examples"

Mechanical construction

All dimensions in mm!

Overview

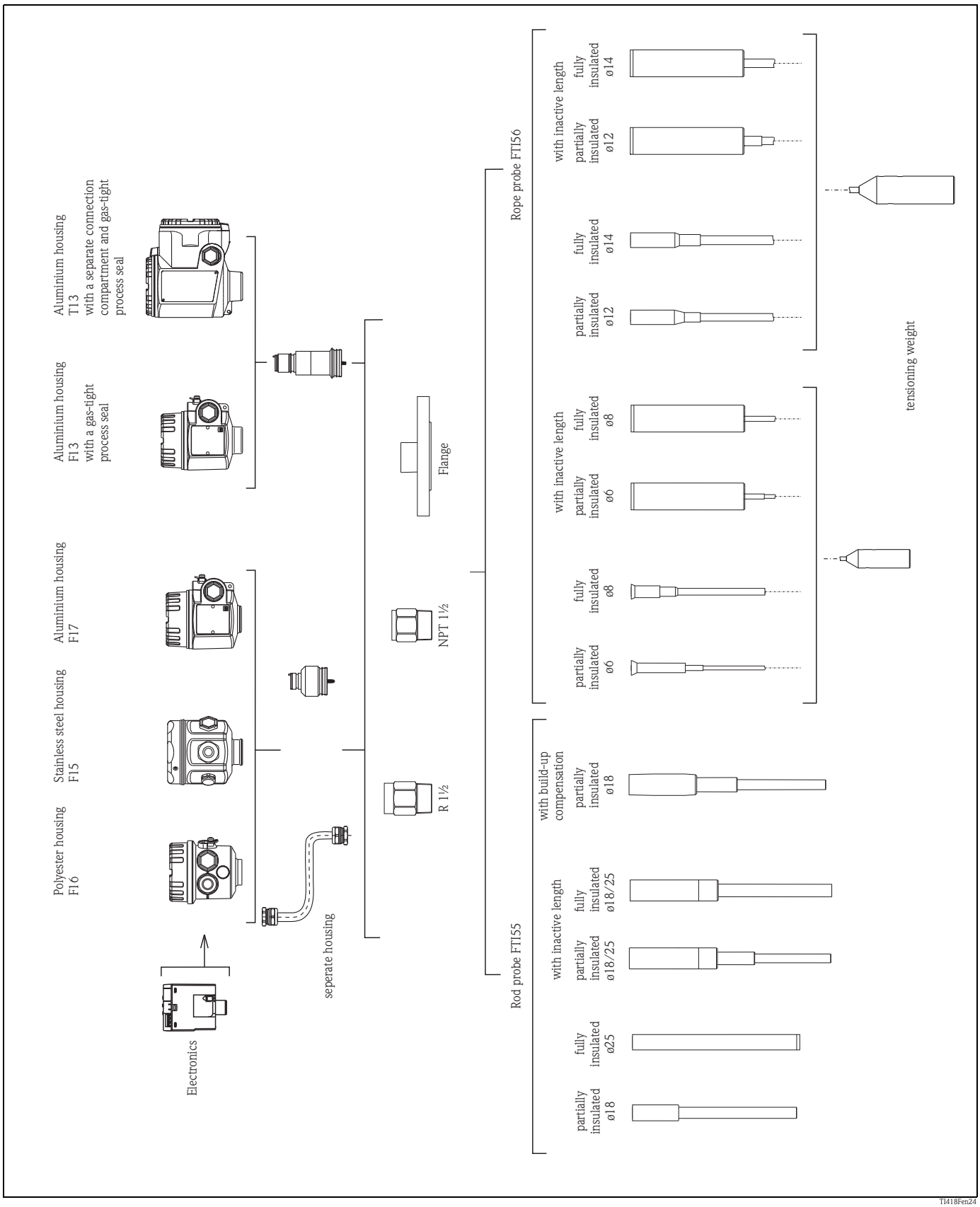

TI418Fen24

Housing

Polyester housing F16

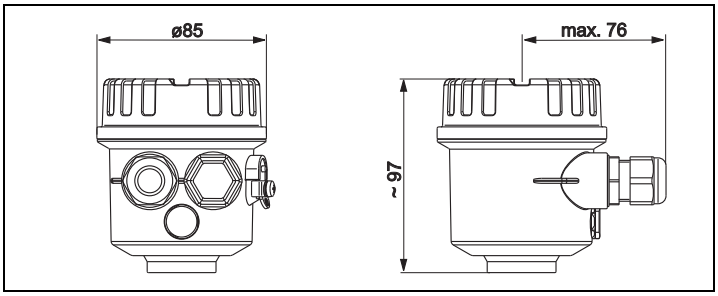

Stainless steel housing F15

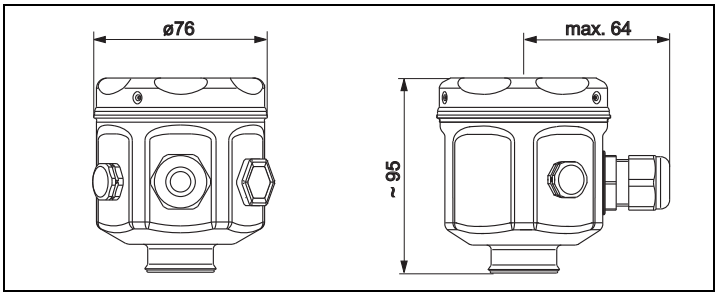

Aluminum housing F17

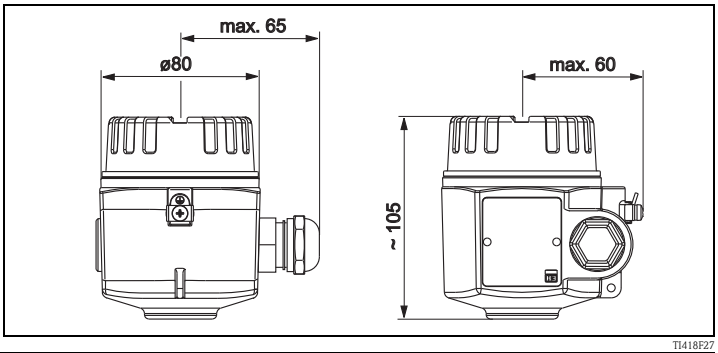

Aluminum housing F13
with gas-tight process seal

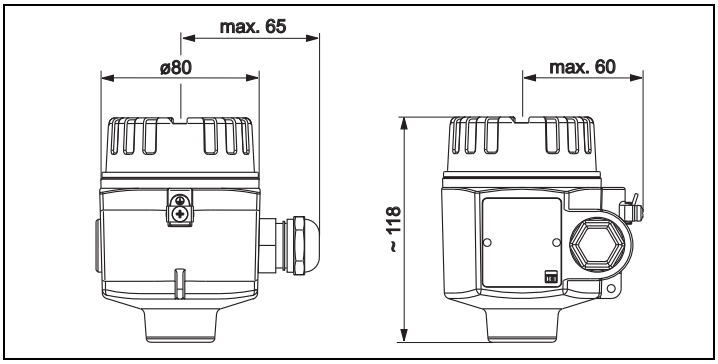

Aluminum housing T13
with separate connection compartment and gas-tight process seal

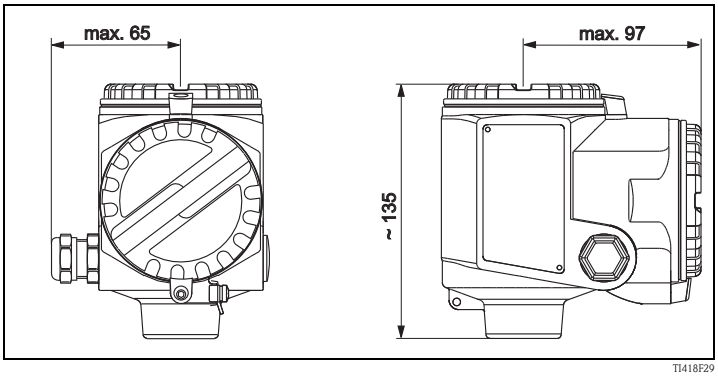

Housing heights with adapter

	Polyester housing F16	Stainless steel housing F15	Aluminum housing F17	Aluminum housing F13*	Aluminum housing with separate connection compartment T13*
	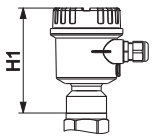 TI418F30	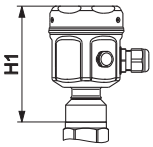 TI418F31	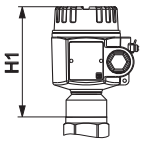 TI418F32	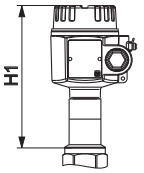 TI418F33	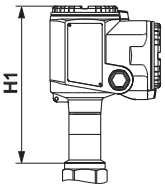 TI418F34
Order code	2	1	3	4	5
FTI55, FTI56					
H1	125	121	131	177	194

* Housing with gas-tight process seal

Process connections and flanges

	Thread: R 1½	Thread: NPT 1½	Flanges
	 TI418Fen35	 TI418Fen36	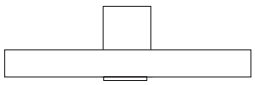 TI418F37
	(DIN EN 10226-1)	(ANSI B 1.20.1)	(EN1092-1) (ANSI B 16.5) (JIS B2220)
Order code/material	RVJ / 316L RV1 / steel	RGJ / 316L RG1 / steel	
Pressures up to	25 bars	25 bars	Depends on flange max. 25 bar

Rod probes FTI55

Total length of the probe from the start of the thread: L = L1 + L3
(+ 125 mm with active buildup compensation)

	Rod probe partially insulated	Rod probe fully insulated	Rod probe with inactive length partially/fully insulated	Rod probe with active buildup compensation partially insulated
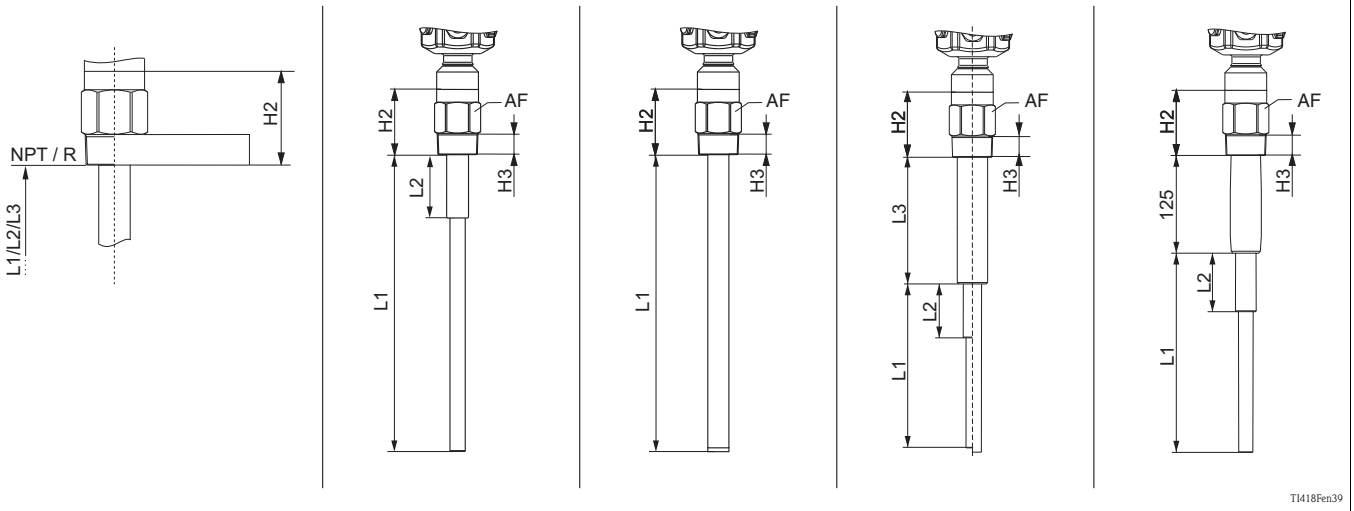				
H2	77	77	66	92
H3	25	25	25	25
Across flats (AF)	50	50	50	50
Total length (L)	200 to 4000	200 to 4000	300 to 6000	225 to 4000
Active rod length (L1)	200 to 4000	200 to 4000	200 to 4000	200 to 4000
Inactive rod length (L3)	-	-	200 to 2000	-
ø Inactive length	-	-	43	-
Length of partial insulation (L2)	75	-	75 / -	75
Probe rod diameter (with insulation)	18 (25)	18 (25)	18 (25)	18 (25)
ø Active build-up compensation/ length	- / -	- / -	- / -	36/ 125
Lateral loading capacity (Nm) at 20 °C	300	300	300	200
Maximum process temperature (°C)	180	80	180/80	180
For use in mounting nozzles	-	-	X	-
In the event of condensate on tank ceiling	-	-	X	X

X = recommended

Length tolerance up to 1 m: 0 to –5 mm > 1 m to 3 m: 0 to –10 mm > 3 m to 6 m: 0 to –20 mm

Rope probes FTI56

Total length of probe from start of thread: L = L1 + L3

	Rod probe Partially insulated rope		Rod probe Fully insulated rope		Rope probe with inactive length Partially insulated rope		Rope probe with inactive length Fully insulated rope	
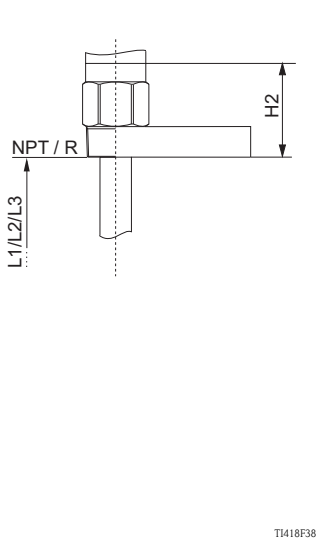	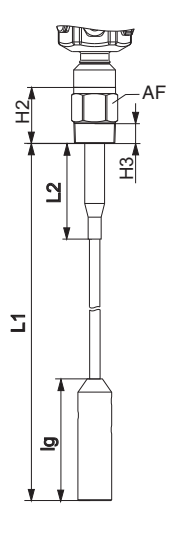		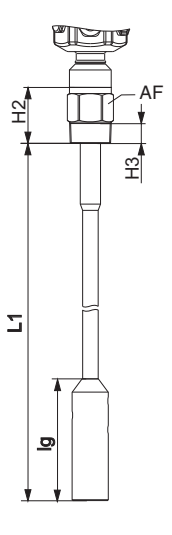		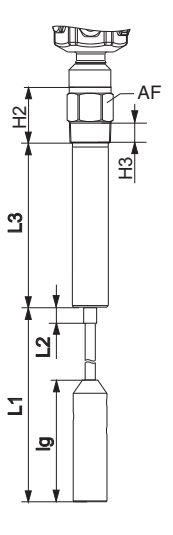		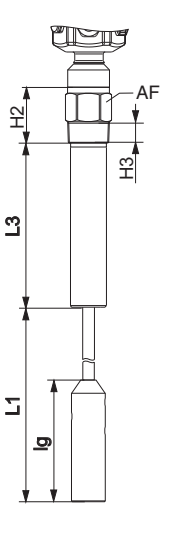	
H2	66		66		66		66	
H3	25		25		25		25	
Across flats (AF)	50		50		50		50	
Total length (L)	500 to 20000		500 to 20000		700 to 20000		700 to 20000	
Active rope length (L1)	500 to 20000		500 to 20000		500 to 19800		500 to 19800	
Length of partial insulation (L2)*	500		-		500		-	
Inactive length (L3)	-		-		200 to 2000		200 to 2000	
ø Inactive length	-		-		43		43	
Probe rope diameter (with insulation)	6 (8)	12 (14)	6 (8)	12 (14)	6 (8)	12 (14)	6 (8)	12 (14)
ø Tensioning weight**	30	40	30	40	30	40	30	40
Length of tensioning weight (lg)	150	250	150	250	150	250	150	250
Tensile loading capacity (kN) of probe rope at 20 °C	30	60	30	60	30	60	30	60
Maximum process temperature (°C)	180		120		180		120	
For use in mounting nozzles	-		-		X		X	
In the event of condensate on tank ceiling	-		-		X		X	

X = recommended
* The length of the partial insulation extends, at maximum, to the tensioning weight.
** The tensioning weight is always uninsulated.

Length tolerance up to 1 m: 0 to –10 mm > 1 m to 3 m: 0 to –20 mm > 3 m to 6 m: 0 to –30 mm > 6 m to 20 m: 0 to –40 mm

Material

Housing

- Aluminum housing F17, F13, T13: GD–Al Si 10 Mg, DIN 1725, with plastic coating (blue/gray)
- Polyester housing F16: PBT–FR fiberglass reinforced polyester (blue/gray)
- Stainless steel housing F15: corrosion-resistant steel 316L (14404), uninsulated

Housing cover and seals

- Aluminum housing F17, F13, T13: EN-AC-AlSi10Mg, plastic-coated cover seal: EPDM
- Polyester housing F16: Cover made of PBT-FR or cover with sight glass made of PA12
  Cover seal: EPDM
- Stainless steel housing F15: AISI 316L Cover seal: silicone

Probe material

- Process connection, tensioning weight for rope probe: 1.4404 (316L) or steel
- Inactive length: 1.4404 (316L)
- Probe rope partially insulated: PTFE, 1.4401 (AISI 316)
- Probe rope fully insulated: PA, galvanized steel
- Probe rod partially insulated: PPS, 1.4404 (316L)
- Probe rod fully insulated: PE, galvanized steel

Weight

- with F15, F16, F17 or F13 housing approx. 4.0 kg
  + flange weight or process connection
  + probe rod 2.0 kg/m (for ø18 mm probe rod) or
  + probe rope 0.180 kg/m (for ø6 mm rope probes) or
  + probe rope 0.550 kg/m (for ø12 mm rope probes)
- with T13 housing approx. 4.5 kg
  + flange weight or process connection
  + probe rod 2.0 kg/m (for ø18 mm probe rod) or
  + probe rope 0.180 kg/m (for ø6 mm rope probes) or
  + probe rope 0.550 kg/m (for ø12 mm rope probes)

Human interface

Electronic inserts **FEI51, FEI52, FEI54, FEI55**

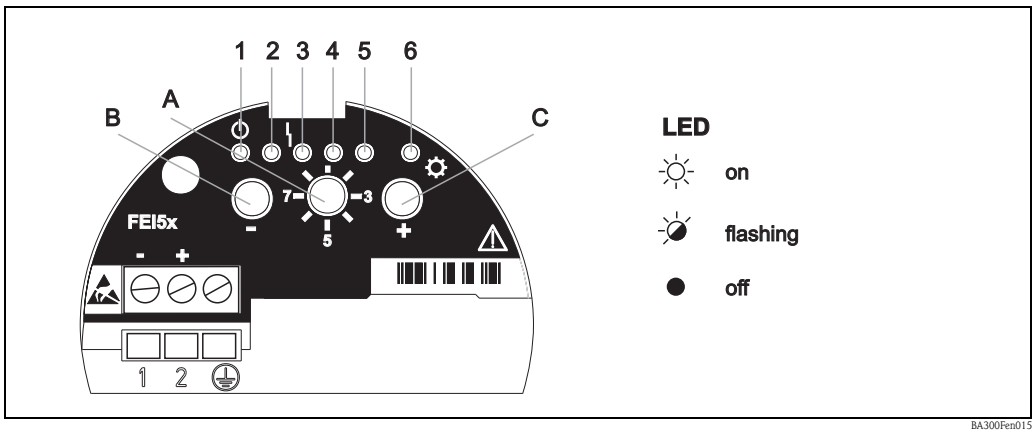

Green LED 1 (⏻ ready for operation), red LED 3 (ϟ error indicated), yellow LED 6 (✲ switching state)

Function switch position	Function	– key	+ key	Light emitting diodes (LED signals)					
				⏻		ϟ			✲
				1 (green)	2 (green)	3 (red)	4 (green)	5 (green)	6 (yellow)
1	Operation			**Flashes** Operational LED	**On** (MIN-SIL)	**Flashes** (warning/ alarm)	**On** (MAX-SIL)		**On/off/ flashes**
	Restore factory setting	Press both keys for approx. 20 s		**On**	–>	–>	–>	–>	On/off/ flashes
2	Empty calibration	Press		**On** (present)					On/off/ flashes
	Full calibration		Press					**On** (present)	On/off/ flashes
	Reset: Calibration and switchpoint adjustment	Press both keys for approx. 10 s		**On**	–>	–>	–>	–>	On/off/ flashes
3	Switch point shift	Press for <	Press for >	**On** (2 pF)	**Off** (4 pF)	**Off** (8 pF)	**Off** (16 pF)	**Off** (32 pF)	On/off/ flashes
4	Measuring range	Press for <		**On** (500 pF)	**Off** (1600 pF)				On/off/ flashes
	Two-point control Δs		Press once					**On**	On/off/ flashes
	Buildup mode		Press twice				On	**On**	On/off/ flashes
5	Switching delay	Press for <	Press for >	**Off** (0.3 s)	**On** (1.5 s)	**Off** (5 s)	**Off** (10 s)		On/off/ flashes
6	Self-test (function test)	Press both keys		**Off** (inactive)				**Flashes** (active)	On/off/ flashes
7	MIN-/MAX Fail-safe mode	Press for MIN	Press for MAX	**Off** (MIN)				**On** (MAX)	On/off/ flashes
	SIL mode* lock/unlock	Press both keys			**On** (MIN-SIL)		**On** (MAX-SIL)		On/off/ flashes
8	Upload/download sensor DAT (EEPROM)	Press for download	Press for upload	**Flashes** (download)				**Flashes** (upload)	On/off/ flashes

* Only in conjunction with FEI55 electronic insert (SIL).

Electronic inserts

FEI53, FEI57S

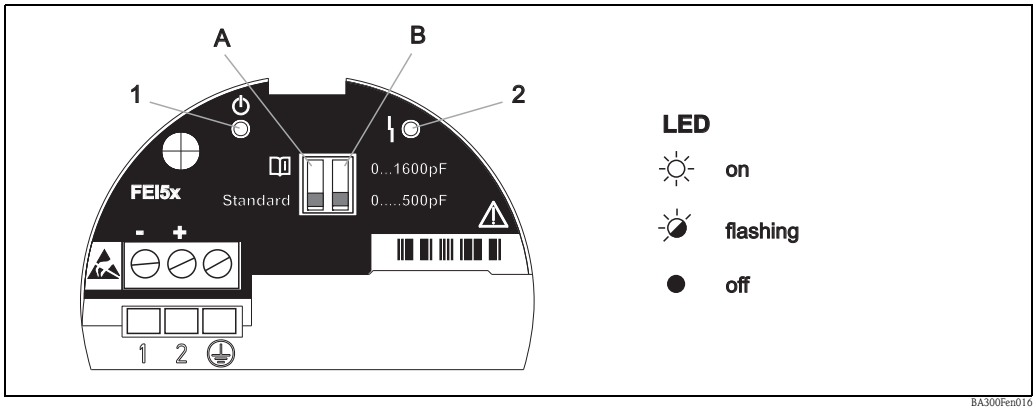

Green LED (⏻ ready for operation), red LED (ϟ error indicated)

DIP switch 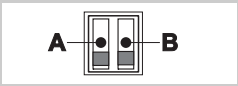	Function
A Standard 	Standard[1]: If the measuring range is exceeded **no** alarm is output.
A 	🕮: If the measuring range is exceeded **an** alarm is output.
B  0.....500pF	Measuring range: The measuring range is between 0 and 500 pF Span: The span is between 5 and 500 pF.
B  0...1600pF	Measuring range: The measuring range is between 0 and 1600 pF Span: The span is between 5 and 1600 pF.

Electronic insert **FEI58**

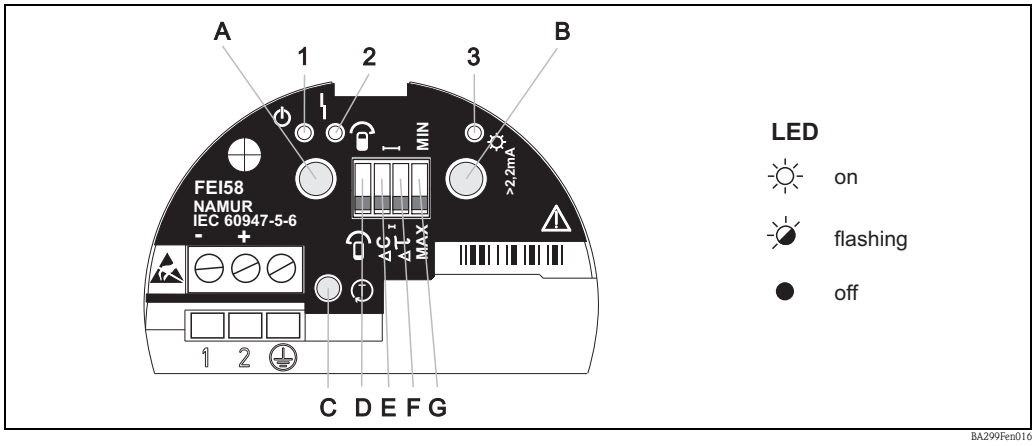

Green LED 1 (⏻ ready for operation), red LED 2 (ϟ error indicated), yellow LED 3 (✲ switching state)

DIP switches (C, D, E, F)		Function
D	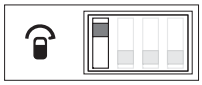	The probe is covered during calibration.
D	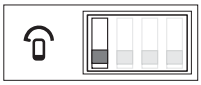	The probe is uncovered during calibration.
E	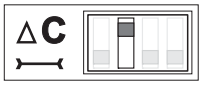	Switchpoint adjustment: 10 pF
E		Switchpoint adjustment: 2 pF
F	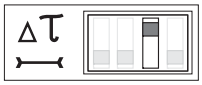	Switching delay: 5 s
F	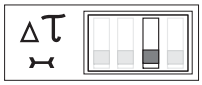	Switching delay: 1 s
G		Fail-safe mode: MIN The output switches safety-oriented when the probe is uncovered (signal on alarm). For use for dry running protection and pump protection for example
G		Fail-safe mode: MAX The output switches safety-oriented when the probe is covered (signal on alarm). For use with overfill protection for example

Key			Function
A	B	C	
X			Display diagnostic code
	X		Display calibration situation
X	X		Perform calibration (during operation)
X	X		Delete calibration points (during startup)
		X	Test key Ⓣ, (disconnects the transmitter from the switching unit)

Certificates and approvals

CE approval

The devices are designed to meet state-of-the-art safety requirements, have been tested and left the factory in a condition in which they are safe to operate. The devices comply with the applicable standards and regulations that are listed in the EC Declaration of Conformity and thus meet the legal requirements of the EC Directives. Endress+Hauser confirms the conformity and successful testing of the device by affixing the CE mark.

Additional certification

- See also "Ordering information" → 🖹 42
- AD2000
  The wetted material (316L) corresponds to AD2000 – W0/W2

Other standards and guidelines

EN 60529
Degrees of protection by housing (IP code)

EN 61010
Protection measures for electrical equipment for measurement, control, regulation and laboratory procedures

EN 61326
Interference emission (Class B equipment), interference immunity (Appendix A – Industrial).

NAMUR
Association for Standards for Control and Regulation in the Chemical Industry

IEC 61508
Functional safety

IEC 60947-5-6
Low-voltage switchgear and control gear; DC interface for proximity sensors and switching amplifiers (NAMUR)

Ordering information

Note! In this list, versions which are mutually exclusive are not marked.

Solicap M FTI55

10	Approval:	
	A	Non-hazardous areas
	B	ATEX II 1/3 D
	C	ATEX II 1/2 D
	F	ATEX II 1 D, 1/2 D, 1/3 D EEx ia D
	L	CSA/FM IS Cl. I, II, III, Div. 1+2, Gr. A-G
	M	CSA/FM XP Cl. I, II, III, Div. 1+2, Gr. A-G
	N	CSA/FM DIP Cl. I, II, III, Div. 1+2, Gr. E-G
	S	TIIS Ex ia IIC T3
	T	TIIS Ex d IIC T3
	3	NEPSI DIP A20
	Y	Special version, to be specified

20		Inactive length L3:	
	A	Not selected	
	B	Not selected + 125 mm/5 inch Active buildup compensation	316L
	1	.... mm	316L
	5	.... inch	316L
	9	Special version	

30			Active length L1:	
		A	.... mm,	steel
		B	325 mm,	steel
		C	.... mm,	316L
		D	325 mm,	316L
		E	600 mm,	steel
		H	.... inch,	steel
		K	13 inch,	steel
		M	.... inch,	316L

30	Active length L1:		
N	13 inch,	316L	
P	24 inch,	steel	
Y	Special version, to be specified		

40	Insulation:		
1		fully insulated PE,	max. 80 °C
2	75 mm L2,	partially insulated PPS,	max. 180 °C
3	3 inch L2,	partially insulated PPS,	max. 180 °C
9	Special version, to be specified		

50	Process connection:			
AFJ	2",	150 lbs RF	316/316L	
AGJ	3",	150 lbs RF	316/316L	
AHJ	4",	150 lbs RF	316/316L	
BSJ	DN80,	PN10/16 A	316L	EN1092-1 (DIN2527 B)
BTJ	DN100,	PN10/16 A	316L	EN1092-1 (DIN2527 B)
B3J	DN50,	PN25/40 A	316L	EN1092-1 (DIN2527 B)
KFJ	10K 50,	RF	316L	JIS B2220
KGJ	10K 80,	RF	316L	JIS B2220
KHJ	10K 100,	RF	316L	JIS B2220
RGJ	NPT 1½,		316L	thread ANSI
RG1	NPT 1½,		steel	thread ANSI
RVJ	R 1½,		316L	thread DIN2999
RV1	R 1½,		steel	thread DIN2999
YY9	Special version, to be specified			

60	Electronics; output:	
1	FEI51; 2-wire	19 to 253VAC
2	FEI52; 3-wire PNP,	10 to 55VDC
3	FEI53; 3-wire,	3 to 12 V signal
4	FEI54; relay DPDT,	19 to 253VAC, 19 to 55VDC
5	FEI55; 8/16 mA,	11 to 36VDC
7	FEI57S;2–wire PFM	
8	FEI58; NAMUR+test key (H-L signal)	
W	Prepared for FEI5x	
Y	Special version, to be specified	

70	Housing:	
1	F15 316L	IP66, NEMA4X
2	F16 polyester	IP66, NEMA4X
3	F17 aluminum	IP66, NEMA4X
4	F13 Alu + gas-tight probe seal	IP66, NEMA4X
5	T13 Alu + gas-tight probe seal + separate connection compartment	IP66, NEMA4X
9	Special version, to be specified	

80	Cable entry:
A	M20 Threaded joint
B	Thread G ½
C	Thread NPT ½
D	Thread NPT ¾
G	Thread M20
E	M12 connector
Y	Special version, to be specified

90	Probe design:	
1	Compact	
2	2000 mm L4 cable	> separate housing
3	.... mm L4 cable	> separate housing
4	80 inch L4 cable	> separate housing
5	.... inch L4 cable	> separate housing
9	Special version, to be specified	

100	Additional equipment:		
	A	Basic version	
	D	EN10204-3.1 material (316L wetted),	Inspection certificate
	E	EN10204-3.1 material (316L wetted), NACE MR0175	Inspection certificate
	F	SIL Declaration of Conformity	
	Y	Special version, to be specified	

FTI55	Product designation

Solicap M FTI56

10	Approval:	
	A	Non-hazardous areas
	B	ATEX II 1/3 D
	C	ATEX II 1/2 D
	F	ATEX II 1 D, 1/2 D, 1/3 D EEx ia D
	L	CSA/FM IS Cl. I, II, III, Div. 1+2, Gr. A-G
	M	CSA/FM XP Cl. I, II, III, Div. 1+2, Gr. A-G
	N	CSA/FM DIP Cl. I, II, III, Div. 1+2, Gr. E-G
	S	TIIS Ex ia IIC T3
	T	TIIS Ex d IIC T3
	3	NEPSI DIP A20
	Y	Special version, to be specified

20	Inactive length L3:		
	A	Not selected	
	1	.... mm	316L
	5	.... inch	316L
	9	Special version	

30	Active length L1; tensioning weight:			
	A	.... mm, 6 mm rope	316L;	316L
	B	.... mm, 12 mm rope	316L;	316L
	C	.... mm, 8 mm rope	galvanized steel;	steel
	D	.... mm, 14 mm rope	galvanized steel;	steel
	H	.... inch, 0.2" rope	316L;	316L
	K	.... inch, 0.5" rope	316L,	316L
	M	.... inch, 0.3" rope	galvanized steel;	steel
	N	.... inch, 0.6" rope	galvanized steel;	steel
	Y	Special version, to be specified		

40	Insulation:		
	1	fully insulated PA,	max. 120 °C
	2	500 mm L2, partially insulated PTFE,	max. 180 °C
	9	Special version, to be specified	

50	Process connection:				
	AFJ	2",	150 lbs RF	316/316L	
	AGJ	3",	150 lbs RF	316/316L	
	AHJ	4",	150 lbs RF	316/316L	
	BSJ	DN80,	PN10/16 A	316L	EN1092-1 (DIN2527 B)
	BTJ	DN100,	PN10/16 A	316L	EN1092-1 (DIN2527 B)
	B3J	DN50,	PN25/40 A	316L	EN1092-1 (DIN2527 B)
	KFJ	10K 50,	RF	316L	JIS B2220
	KGJ	10K 80,	RF	316L	JIS B2220
	KHJ	10K 100,	RF	316L	JIS B2220
	RGJ	NPT 1½		316L	thread ANSI
	RG1	NPT 1½,		steel	thread ANSI
	RVJ	R 1½,		316L	thread DIN2999
	RV1	R 1½,		steel	thread DIN2999
	YY9	Special version, to be specified			

60	Electronics; output:		
	1	FEI51; 2-wire	19 to 253VAC
	2	FEI52; 3-wire PNP,	10 to 55VDC
	3	FEI53; 3-wire,	3 to 12 V signal

60	Electronics; output:	
	4	FEI54; relay DPDT, 19 to 253VAC, 19 to 55VDC
	5	FEI55; 8/16 mA, 11 to 36VDC
	7	FEI57S;2–wire PFM
	8	FEI58; NAMUR+test key (H-L signal)
	W	Prepared for FEI5x
	Y	Special version, to be specified

70	Housing:		
	1	F15 316L	IP66, NEMA4X
	2	F16 polyester	IP66, NEMA4X
	3	F17 aluminum	IP66, NEMA4X
	4	F13 Alu + gas-tight probe seal	IP66, NEMA4X
	5	T13 Alu + gas-tight probe seal + separate connection compartment	IP66, NEMA4X
	9	Special version, to be specified	

80	Cable entry:	
	A	M20 Threaded joint
	B	Thread G ½
	C	Thread NPT ½
	D	Thread NPT ¾
	G	Thread M20
	E	M12 connector
	F	7/8" connector
	Y	Special version, to be specified

90	Probe design:	
	1	Compact
	2	2000 mm L4 cable > separate housing
	3	.... mm L4 cable > separate housing
	4	80 inch L4 cable > separate housing
	5	.... inch L4 cable > separate housing
	9	Special version, to be specified

100	Additional equipment:	
	A	Basic version
	F	SIL Declaration of Conformity
	Y	Special version, to be specified

FTI56	Product designation

Accessories

Weather protection cover

For F13 and F17 housing
Order number: 71040497

Overvoltage protection HAW56x

Overvoltage protection (housing)

- HAW569–A11A (non-hazardous)
- HAW569–B11A (hazardous area)

Note! These two versions can be screwed directly into the housing (M20x1.5).

Surge arrester for limiting overvoltage in signal lines and components.

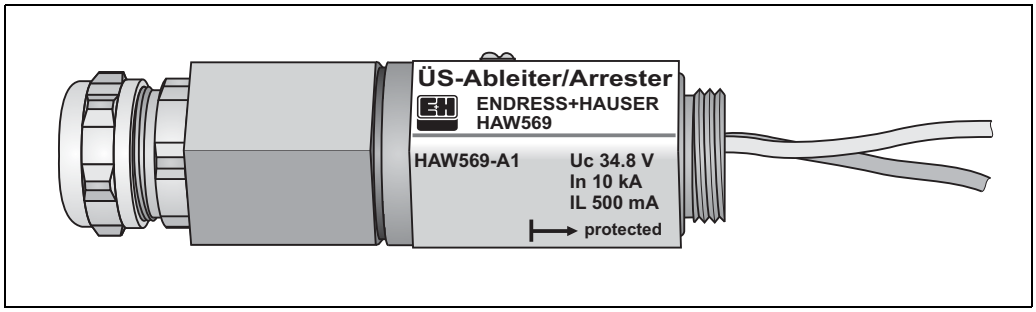

L00-FMI5xxxx-03-05-xx-xx-009

Overvoltage protection (cabinet)

- HAW562Z (hazardous area)

The HAW562Z module can be used if installing in cabinets.

Spare parts

Electronic inserts

Electronic insert	Parts number
FEI51	71042887
FEI52	71025819
FEI53	71025820
FEI54	71025814
FEI55	71025815
FEI57S	71025816
FEI58	71100895

You can order spare parts directly from your E+H service organization by quoting the order number (see below).
Before ordering, please note that all ordered spare parts must correspond with the indications on your nameplate. Otherwise, the indications on the nameplate will no longer correspond with the instrument version.

Housing cover

Cover	Parts number
For aluminum housing F13: gray with sealing ring	52002698
For stainless steel housing F15: with sealing ring	52027000
For stainless steel housing F15: with clasp and sealing ring	52028268
For polyester housing F16, flat: gray with sealing ring	52025606
For aluminum housing F17, flat: with sealing ring	52002699
For aluminum housing T13, flat: gray with sealing ring/electronics compartment	52006903
For aluminum housing T13, flat: gray with sealing ring/connection compartment	52007103

Seal set for stainless steel housing

- Seal set for stainless steel housing F15: with 5 sealing rings
  52028179

Documentation

This documentation is available on the product pages at www.endress.com

Technical Information

- Nivotester FTL325N
  TI00353F/00/en
- Nivotester FTL375N
  TI00361F/00/en
- EMC test procedures
  TI00241F/00/en

Operating Instructions

- Solicap M FTI55, FTI56
  BA00300F/00/en

Certificates

Safety information (ATEX)

- Solicap M FTI55, FTI56
  ATEX II 1 D Ex tD A20 IP65 T 90 °C,
  ATEX II 1/2 D Ex tD A20/A21 IP65 T 100 °C
  XA00389F/00/a3
- Solicap M FTI55, FTI56
  DIP A21 T_A, T 100°C IP65
  NEPSI GYJ071369
  XA00426F/00/a3

Control Drawings (for FM and CSA)

- Solicap M FTI55, FTI56
  FM ZD00222F/00/en
- Solicap M FTI55, FTI56
  CSA ZD00225F/00/en

Functional safety (SIL2/SIL3)

- Solicap M FTI55, FTI56
  SIL
  SD00278F/00/en

CRN registration

- CRN 0F12978.5

Other

- AD2000
  The wetted material (316L) corresponds to AD2000 – W0/W2

Patents

This product is protected by at least one of the patents listed below.
Further patents are under development.

- DE 103 22 279,
  WO 2004 102 133,
  US 2005 003 9528
- DE 203 13 695,
  WO 2005 025 015

LENNTECH
WATER TREATMENT SOLUTIONS
info@lenntech.com Tel. +31-152-610-900
www.lenntech.com Fax. +31-152-616-289

Endress+Hauser
People for Process Automation