TI00123R/09/EN/22.25-00
71695758
2025-02-28

Technical Information
Compact thermometer TMR31, TMR35

Metric, compact RTD 4-20 mA thermometer for industrial and hygienic applications

Applications

- Designed for universal use in general or hygienic applications in the Food & Beverages and Life Sciences industries. Preferred installation locations include compact vessels and pipes - anywhere a compact thermometer design with short immersion lengths and reliable measurement offers additional advantages.
- Measuring range: −50 to +150 °C (−58 to +302 °F), with extension neck up to 200 °C (392 °F)
- Pressure range: up to 100 bar (1 450 psi)
- Protection class: IP69K
- Output
  - Without electronics: Pt100 (4-wire connection)
  - With electronics: 4 to 20 mA

Your benefits

Quick installation and easy commissioning:
- Small, compact design, made entirely of stainless steel
- M12 connection with IP69K protection for easy electrical connection
- Pt100, 4-wire connection or PC-programmable transmitter with 4 to 20 mA output
- Can also be ordered with preconfigured measuring range
- Variable installed lengths from 40 to 600 mm (1.57 to 23.6 in)

Outstanding measurement properties thanks to innovative sensor technology:
- Extremely short response times
- Very accurate even with short immersion lengths
- Thinfilm sensor element Pt100, accuracy class A (IEC 60751)

Safe operation with certificates and approvals:
- Device safety according to EN 61010-1
- Electromagnetic compatibility as per NAMUR NE21
- Failure information in the event of sensor break or sensor short circuit, configurable according to NAMUR NE43
- TMR35: hygiene-compliant design with 3-A mark, EHEDG certification, ASME BPE conformity, FDA, EC 1935/2004, EN 2023/2006, TSE/ADI
- Marine approval according to DNV GL

Endress+Hauser
People for Process Automation

Table of contents

Document information 3
Symbols 3

Function and system design 3
Measuring principle 3
Measuring system 3
Equipment architecture 4

Input 4
Measuring range 4

Output 5
Output signal 5
Signal on alarm 5
Load 5
Linearization/transmission behavior 5

Power supply 5
Supply voltage 5
Power supply failure 5
Electrical connection 5
Input current required 6
Maximum current consumption 6
Switch-on delay 6
Overvoltage protection 6

Performance characteristics 6
Reference operating conditions 6
Maximum measured error 7
Long-term drift 7
Operating influences 7
Sensor response time 7
Electronics response time 7
Sensor current 7
Calibration 8

Installation 8
Orientation 8
Installation instructions 8

Environment 11
Ambient temperature range 11
Storage temperature 11
Operating altitude 11
Climate class 11
Degree of protection 11
Shock and vibration resistance 11
Electromagnetic compatibility (EMC) 11
Electrical safety 11

Process 11
Process temperature range 11
Process pressure range 12
Medium - state of aggregation 13

Mechanical construction 13
Design, dimensions 13
esign, dimensions 15
Weight 16
Material 16
Surface roughness 16
Process connections for hygienic applications 16
Thermowell design, dimensions 20

Human interface 20
Local operation 20
Local display 21
Remote operation 21

Certificates and approvals 21
Hygiene standard 21
Materials in contact with food/product (FCM) 21

Ordering information 21

Accessories 21
Device-specific accessory 22
Online tools 24
Communication-specific accessory 24
Service-specific accessories 25
System components 25

Documentation 26

Document information

Symbols

Symbols for certain types of information

Symbol	Meaning
	Permitted Procedures, processes or actions that are permitted.
	Preferred Procedures, processes or actions that are preferred.
	Forbidden Procedures, processes or actions that are forbidden.
	Tip Indicates additional information.
	Reference to documentation
	Reference to page
	Reference to graphic
	Visual inspection

Symbols in graphics

Symbol	Meaning	Symbol	Meaning
1, 2, 3,...	Item numbers	1., 2., 3....	Series of steps
A, B, C, ...	Views	A-A, B-B, C-C, ...	Sections
	Hazardous area		Safe area (non-hazardous area)

Function and system design

Measuring principle

Resistance thermometer (RTD):

This insert uses a Pt100 according to IEC 60751 as the temperature sensor. The temperature sensor is a temperature-sensitive platinum resistor with a resistance of 100 Ω at 0 °C (32 °F) and a temperature coefficient α = 0.003851 $°C^{-1}$.

Thin film resistance sensors (TF):

A very thin, ultrapure platinum layer, approx. 1 µm thick, is vaporized in a vacuum on a ceramic substrate and then structured photolithographically. The platinum conductor paths formed in this way create the measuring resistance. Additional covering and passivation layers are applied and reliably protect the thin platinum layer from contamination and oxidation, even at high temperatures. The primary advantages of thin film temperature sensors are their smaller sizes and better vibration resistance.

Measuring system

The compact thermometer measures the process temperature with a Pt100 sensor element (class A, 4-wire). An optional built-in transmitter converts the Pt100 input signal to an 4 to 20 mA output signal.

A broad portfolio of optimized components for the temperature measuring point is available to ensure seamless integration of the measuring point:
- Power supply unit/barrier
- Display units
- Overvoltage protection

For more detailed information, see the brochure "System Products and Data Managers - Solutions for the loop (FA00016K/EN)."

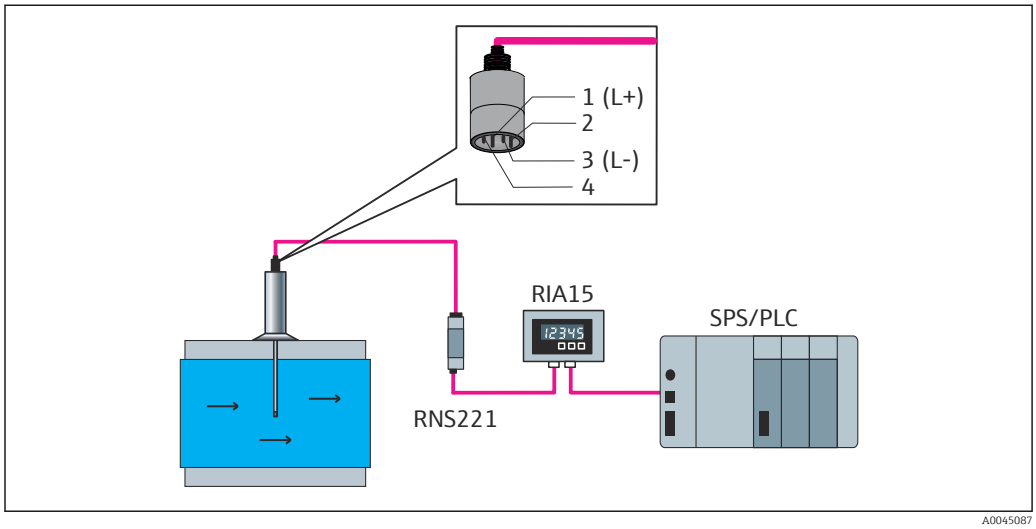

1 *M12 connection with 4 to 20 mA analog output*

Equipment architecture

Design		Options
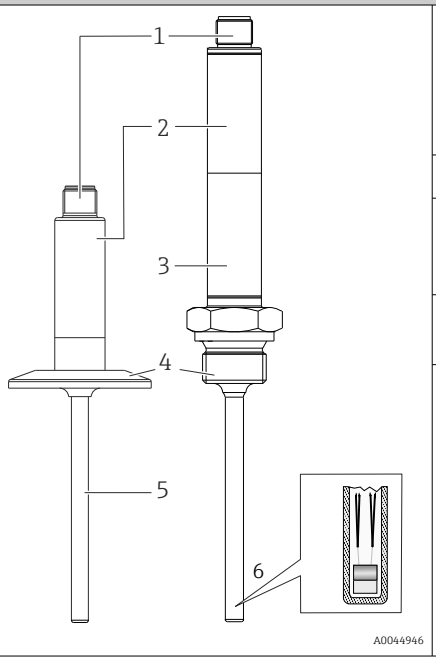	1: Electrical connection, output signal 2: Transmitter housing	**Your benefits:** - M12, 4-pin connector, reduced cost and effort, incorrect wiring is prevented - Optimum protection, IP69K as standard - Compact, integrated transmitter (4 to 20 mA)
	3: Extension neck	Optionally available if process temperature is too high for the electronics
	4: Process connection → 16	Over 25 different versions for industrial and hygienic applications.
	5: Thermowell	- Versions with and without thermowell (insert in direct contact with process) - Thermowell diameter 6 mm (0.25 in)
	6: Insert with Pt100 (TF):	**Your benefits:** - Minimization of necessary immersion length: better product protection thanks to improved process flow - Excellent cost-performance ratio - Insert: Ø3 mm (1/8 in) or Ø6 mm (1/4 in)

Input

Measuring range Pt100 (TF) according to IEC 60751

Without extension neck	−50 to +150 °C (−58 to +302 °F)
With extension neck	−50 to +200 °C (−58 to +392 °F)

Min. span = 10 K (18 °F)

Output

Output signal

Sensor output	Pt100, 4-wire connection, class A
Analog output	4 to 20 mA; variable measuring range

Signal on alarm

The signal on alarm is generated if the measuring information is missing or not valid.

In the 4 to 20 mA mode, the device transmits the failure information according to NAMUR NE43:

Underranging	Linear drop from 4.0 to 3.8 mA
Overranging	Linear increase from 20.0 to 20.5 mA
Failure e.g. sensor defective	≤ 3.6 mA (**low**) or ≥ 21 mA (**high**) can be selected The **high** alarm setting can be set between 21.5 mA and 23 mA, thus providing the flexibility needed to meet the requirements of various control systems.

Load

$R_{b\ max.}$= ($U_{b\ max.}$ - 10 V) / 0.023 A (current output)

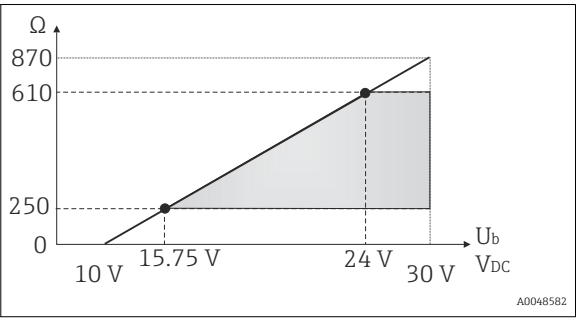

Linearization/transmission behavior

Temperature - linear

Power supply

Supply voltage

U_b	10 to 35 V_{DC}

Power supply failure

- To meet electrical safety according to CAN/CSA-C22.2 No. 61010-1 or UL 61010-1, the device may only be powered by a power supply unit with a limited energy electric circuit in accordance with UL/EN/IEC 61010-1 chapter 9.4 or Class 2 according to UL 1310, "SELV or Class 2 circuit".
- Behavior in the event of overvoltage (> 30 V)
  The device works continuously up to 35 V_{DC} without any damage. If the supply voltage is exceeded, the specified characteristics are no longer guaranteed.
- Behavior in the event of undervoltage
  If the supply voltage falls below the minimum value ~ 7 V, the device switches off in a defined manner (status as if not supplied with power).

Electrical connection

According to the 3-A Sanitary Standard and the EHEDG, electrical connecting cables must be smooth, corrosion-resistant and easy to clean.

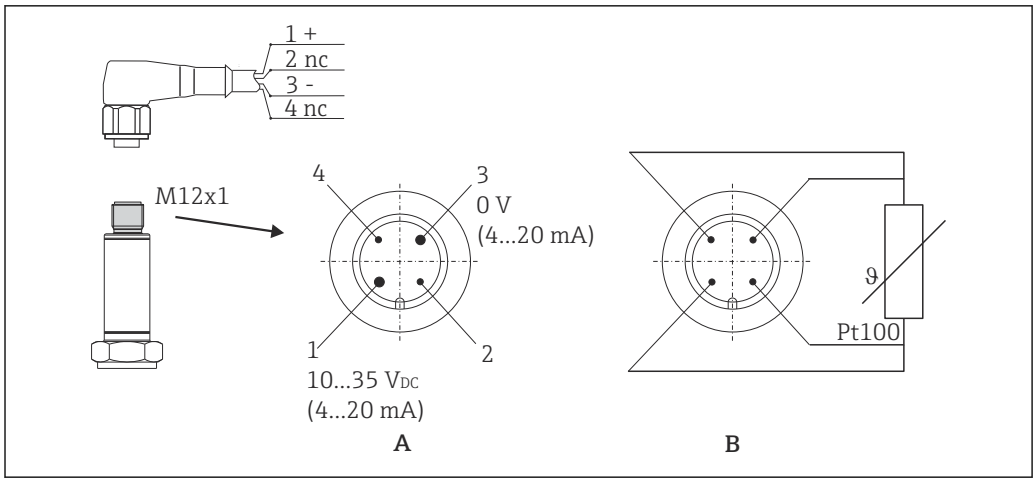

2 Pin assignment, device plug

A Version with transmitter, M12 plug, 4-pin
B Version without transmitter, Pt100, 4-wire connection

1: Pin 1	Power supply 10 to 35 V_{DC} Current output 4 to 20 Cable connection, wire color brown = BN
2: Pin 2	Connection of PC configuration cable - shortened pin Cable connection, wire color white = WH
3: Pin 3	Power supply 0 V_{DC} Current output 4 to 20 Cable connection, wire color blue = BU
4: Pin 4	Connection of PC configuration cable - shortened pin Cable connection, wire color black = BK

Input current required

≤ 3.5 mA for 4 to 20 mA

Maximum current consumption

≤ 23 mA for 4 to 20 mA

Switch-on delay

2 s

Overvoltage protection

To protect against overvoltage in the power supply and signal/communication cables for the thermometer electronics, the manufacturer offers the HAW562 surge arrester for DIN rail mounting.

For more detailed information, see Technical Information HAW562 surge arrester (TI01012K) .

Performance characteristics

Reference operating conditions

Adjustment temperature (ice bath)	0 °C (32 °F) for sensor
Ambient temperature range	25 °C ± 3 °C(77 °F ± 5 °F) for electronics
Supply voltage	24 V_{DC} ± 10 %
Relative humidity	< 95 %

Maximum measured error

According to DIN EN 60770 and the reference conditions specified above. The measured error data correspond to ±2 σ (Gaussian distribution). The data include non-linearities and repeatability.

|T| = Numerical value of the temperature in °C without regard to algebraic sign.

Thermometer without electronics

Standard	Designation	Measuring range	Measured error ME (±)	
			Maximum [1]	Based on measured value [2]
IEC 60751	Pt100 Cl. A	−50 to +200 °C (−58 to +392 °F)	0.55 K (0.99 °F)	ME = ± (0.15 K (0.27 °F) + 0.002 * |T|)

1) Maximum measured error for the specified measuring range.
2) Deviations from maximum measured error possible due to rounding.

Thermometer with electronics

Standard	Designation	Measuring range	Measured error (±) [1]
IEC 60751	Pt100 Cl. A	−50 to +200 °C (−58 to +392 °F)	0.1 K (0.18 °F) or 0.08 %

1) Percentage refers to the set span. The larger value is valid.

Total measured error of thermometer (sensor + electronics)

Standard	Designation	Measuring range	Measured error ME (±) [1]
IEC 60751	Pt100 Cl. A	▪ −50 to +150 °C (−58 to +302 °F) without extension neck ▪ −50 to +200 °C (−58 to +392 °F) with extension neck	ME = ± (0.25 K (0.48 °F) + 0.002 * |T|)

1) Deviations from maximum measured error possible due to rounding.

Long-term drift

Electronics:
≤ 0.1 K (0.18 °F)/year or 0.05 %/year

Data under reference operating conditions. % refers to the set span. The larger value is valid.

Operating influences

The measured error data correspond to ±2 σ (Gaussian distribution).

Ambient temperature	T = ±(15 ppm/K * (full scale value + 200) + 50 ppm/K * set measuring range) * DT DT = deviation of ambient temperature from the reference operating conditions
Supply voltage	≤ ± 0.01%/V deviation from 24 V [1]
Load	± 0.02%/100 Ω [1]

1) Specifications in percent refer to the full scale value of the measuring range

Sensor response time

Tests in water at 0.4 m/s (1.3 ft/s) according to IEC 60751; temperature changes in increments of 10 K. Response times measured for the version without electronics.

t_{50}	t_{90}
< 1 s	< 2 s

Electronics response time

Max. 1 s

When recording step responses, it is important to bear in mind that the response times of the sensor might be added to the specified times.

Sensor current

≤ 0.6 mA

Calibration

Calibration of thermometers
Calibration involves comparing the measured values of a device under test (DUT) with those of a more precise calibration standard using a defined and reproducible measurement method. The aim is to determine the deviation of the DUT's measured values from the true value of the measured variable. Two different methods are used for thermometers:
- Calibration at fixed-point temperatures, e.g. at the freezing point of water at 0 °C
- Calibration compared against a precise reference thermometer

The thermometer to be calibrated must display the fixed point temperature or the temperature of the reference thermometer as accurately as possible. Temperature-controlled calibration baths with very homogeneous thermal values, or special calibration furnaces into which the DUT and the reference thermometer, where necessary, can project to a sufficient degree, are typically used for thermometer calibrations.

Sensor-transmitter-matching
The resistance/temperature curve of platinum resistance thermometers is standardized but in practice it is rarely possible to keep to the values precisely over the entire operating temperature range. For this reason, platinum resistance sensors are divided into tolerance classes, such as class A, AA or B as per IEC 60751. These tolerance classes describe the maximum permissible deviation of the specific sensor characteristic curve from the standard curve, i.e. the maximum temperature-dependent characteristic error that is permitted. The conversion of measured sensor resistance values at temperatures in temperature transmitters or other meter electronics is often susceptible to considerable errors as the conversion is generally based on the standard characteristic curve.

When temperature transmitters are used, this conversion error can be reduced significantly by sensor-transmitter-matching:
- Calibration at least at three temperatures and determination of the actual temperature sensor characteristic curve
- Adjustment of the sensor-specific polynomial function using appropriate Calendar-van-Dusen (CvD) coefficients
- Configuration of the temperature transmitter with the sensor-specific CvD coefficients for resistance/temperature conversion, and
- another calibration of the reconfigured temperature transmitter with the connected resistance thermometer

The manufacturer offers this sensor-transmitter-matching as a separate service. Furthermore, the sensor-specific polynomial coefficients of platinum resistance thermometers are indicated on every calibration protocol where possible, e.g. at least three calibration points.

For the device, the manufacturer offers standard calibrations at a reference temperature of −50 to +200 °C (−58 to +392 °F) based on the ITS90 (International Temperature Scale). Calibrations in other temperature ranges are available from your local sales center on request. Calibrations are traceable to national and international standards. The calibration certificate is referenced to the serial number of the device.

Installation

Orientation

No restrictions. However, self-draining in the process must be guaranteed. If there is an opening to detect leaks at the process connection, this opening must be at the lowest possible point.

Installation instructions

The immersion length of the compact thermometer can considerably influence the measurement accuracy. If the immersion length is too short, measurement errors can occur as a result of heat conduction via the process connection and the vessel wall. Therefore, if installing in a pipe, the immersion length should ideally correspond to half of the pipe diameter.

Installation possibilities: pipes, tanks or other plant components.

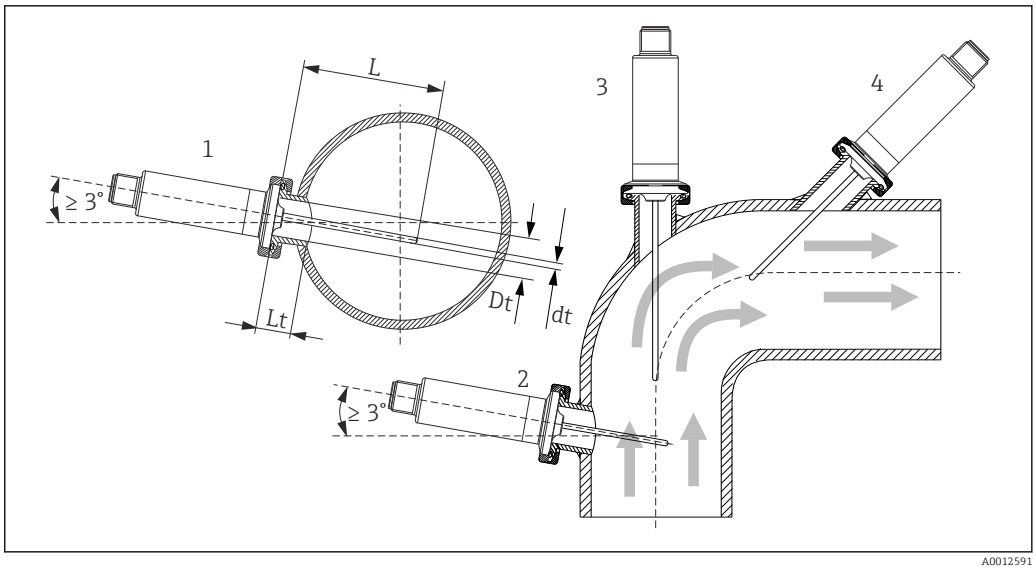

3 Installation examples

1, 2 Perpendicular to the flow direction, installed at a min. angle of 3 ° to ensure self-draining
3 On elbows
4 Inclined installation in pipes with a small nominal diameter
L Insertion length

The requirements of the EHEDG and the 3-A Sanitary Standard must be adhered to.

Installation instruction EHEDG/cleanability: Lt ≤ (Dt-dt)

Installation instruction 3-A/cleanability: Lt ≤ 2 (Dt-dt)

In the case of pipes with a small nominal diameter, it is advisable for the tip of the thermometer to project well into the process so that it extends past the pipe axis. Installation at an angle (4) could be another solution. When determining the immersion or insertion length, all the parameters of the thermometer and of the medium to be measured must be taken into account (e.g. flow velocity, process pressure).

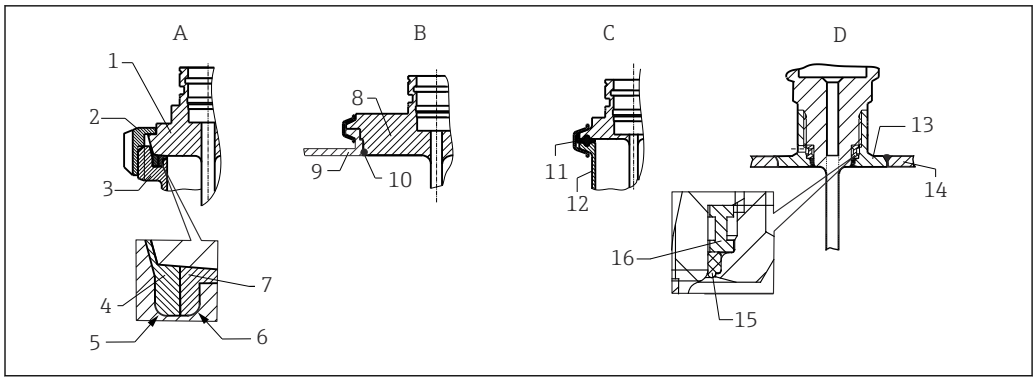

4 Detailed installation instructions for hygiene-compliant installation

A Milk pipe connection according to DIN 11851, only in conjunction with EHEDG-certified, self-centering sealing ring
1 Sensor with milk pipe connection
2 Groove slip-on nut
3 Counterpart connection
4 Centering ring
5 R0.4
6 R0.4
7 Sealing ring
B Varivent® process connection for VARINLINE® housing
8 Sensor with Varivent connection
9 Counterpart connection
10 O-ring
C Clamp according to ISO 2852
11 Molded seal
12 Counterpart connection
D Process connection Liquiphant-M G1", horizontal installation
13 Weld-in adapter
14 Vessel wall
15 O-ring
16 Thrust collar

NOTICE

The following actions must be taken if a sealing ring (O-ring) or seal fails:

- The thermometer must be removed.
- The thread and the O-ring joint/sealing surface must be cleaned.
- The sealing ring or seal must be replaced.
- CIP must be performed after installation.

In the case of weld-in connections, exercise the necessary degree of care when performing the welding work on the process side:

1. Use suitable welding material.
2. Flush-weld or weld with welding radius ≥ 3.2 mm (0.13 in).
3. Avoid crevices, folds or gaps.
4. Ensure the surface is honed and mechanically polished, Ra ≤ 0.76 µm (30 µin).

Pay attention to the following when installing the thermometer to ensure that the cleanability is not affected:

1. The installed sensor is suitable for CIP (cleaning in place). Cleaning is carried out in combination with piping or tank. In the case of internal tank fixtures using process connection nozzles, it is important to ensure that the cleaning assembly sprays this area directly so that it is cleaned properly.
2. The Varivent® connections enable flush-mounted installation.

Environment

Ambient temperature range

T_a	−40 to +85 °C (−40 to +185 °F)

Storage temperature

T_s	−40 to +85 °C (−40 to +185 °F)

Operating altitude

Up to 2 000 m (6 600 ft) above sea level

Climate class

In accordance with IEC/EN 60654-1, class C

Degree of protection

As per IEC/EN 60529: IP67 with coupling and connecting cable (not evaluated by UL). Depends on the degree of protection of the connection cable. → 🗎 24

Shock and vibration resistance

4g in the range from 2 to 150 Hz as per DIN EN 60068-2-6

Electromagnetic compatibility (EMC)

Electromagnetic compatibility in accordance with all the relevant requirements of the IEC/EN 61326 series and NAMUR Recommendation EMC (NE21). For details refer to the EU Declaration of Conformity.

Maximum measurement error < 1% of the measuring range.

Interference immunity as per IEC/EN 61326 series, industrial requirements

Interference emission as per IEC/EN 61326 series, Class B equipment

Electrical safety

- Protection class III
- Overvoltage category II
- Pollution level 2

Process

Process temperature range

The thermometer electronics must be protected against temperatures over 85 °C (185 °F) by an extension neck of the appropriate length.

Device version without electronics

Independent of the extension neck	−50 to +200 °C (−58 to +392 °F)

Device version with electronics

Without extension neck	−50 to +150 °C (−58 to +302 °F)
With extension neck	−50 to +200 °C (−58 to +392 °F)

The following restrictions apply for the thermometer for general applications with a process connection, depending on the process connection and ambient temperature:
- If mounting with process connections with an adjustable insertion length, e.g. compression fitting with sealing taper, a corresponding extension neck length must be taken into consideration when installing. → 🗎 22
- Ambient temperatures must be taken into consideration

Maximum ambient temperature	Maximum process temperature	
	Without extension neck	With extension neck length 35 mm (1.38 in)
≤ 25 °C (77 °F)	150 °C (302 °F)	200 °C (392 °F)
≤ 40 °C (104 °F)	135 °C (275 °F)	180 °C (356 °F)
≤ 60 °C (140 °F)	120 °C (248 °F)	160 °C (320 °F)
≤ 85 °C (185 °F)	100 °C (212 °F)	133 °C (271 °F)

Process pressure range

The maximum possible process pressure depends on various influencing factors, such as the design, process connection and process temperature. Maximum possible process pressures for the individual process connections. → 🗎 16

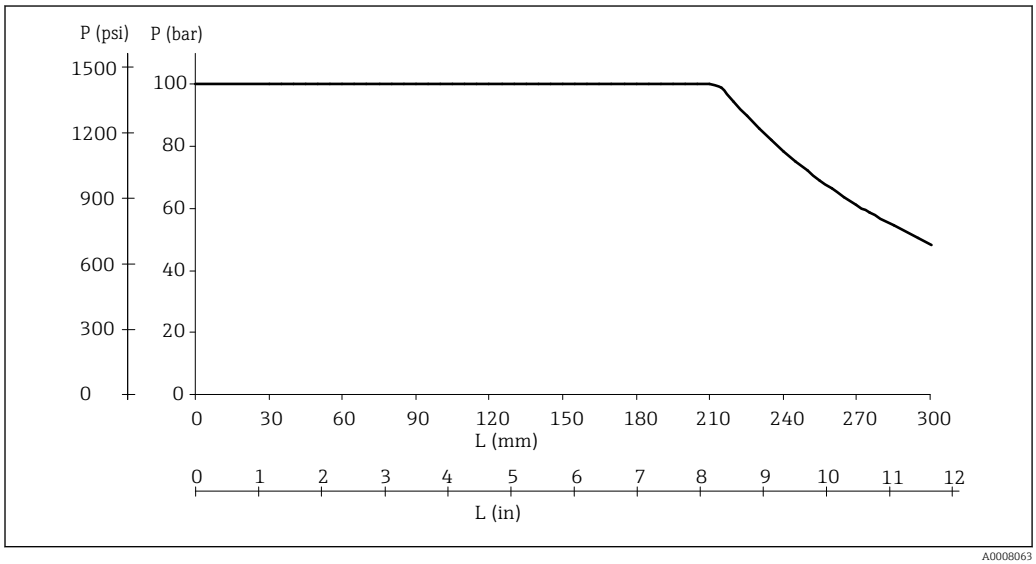

5 Maximum permitted process pressure

L Insertion length
p Process pressure

The diagram not only considers the overpressure but also the pressure load caused by the flow, wherein a safety factor of 1.9 has been specified for operation with flow. The maximum permitted static operating pressure is lower for longer insertion lengths due to the increased bending load caused by the flow. The calculation assumes the maximum permitted flow velocity for the respective insertion length (see the diagram below).

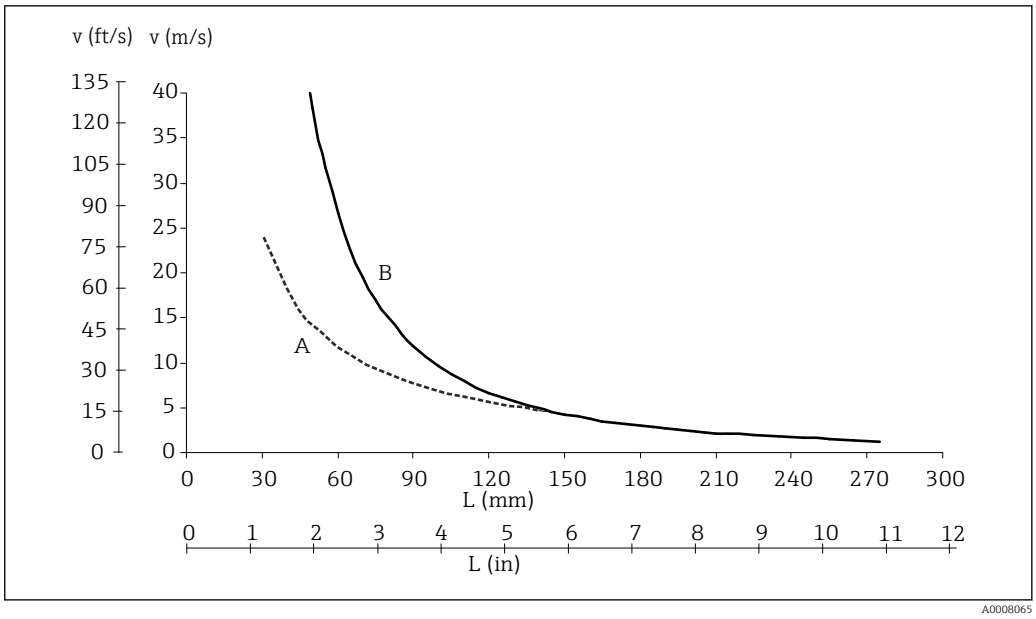

6 Permitted flow velocity depending on the insertion length

L Insertion length during flow
v Flow velocity
A Medium: water at T = 50 °C (122 °F)
B Medium: superheated steam at T = 200 °C (392 °F)

The permitted flow velocity is the minimum from the resonance velocity (resonance distance 80%) and the load or buckling caused by flow, which would result in the failure of the thermometer tube or the undershooting of the safety factor (1.9). The calculation was performed for the specified limit operating conditions of T = 200 °C (392 °F) and process pressure p ≤ 100 bar (1 450 psi).

It is possible to verify the mechanical loading capacity as a function of the installation and process conditions using the online TW Sizing Module for thermowells in the Endress+Hauser Applicator software. → 21

Medium - state of aggregation

Gaseous or liquid (also with high viscosity, e.g. yogurt).

Mechanical construction

Design, dimensions

Thermometer for general applications

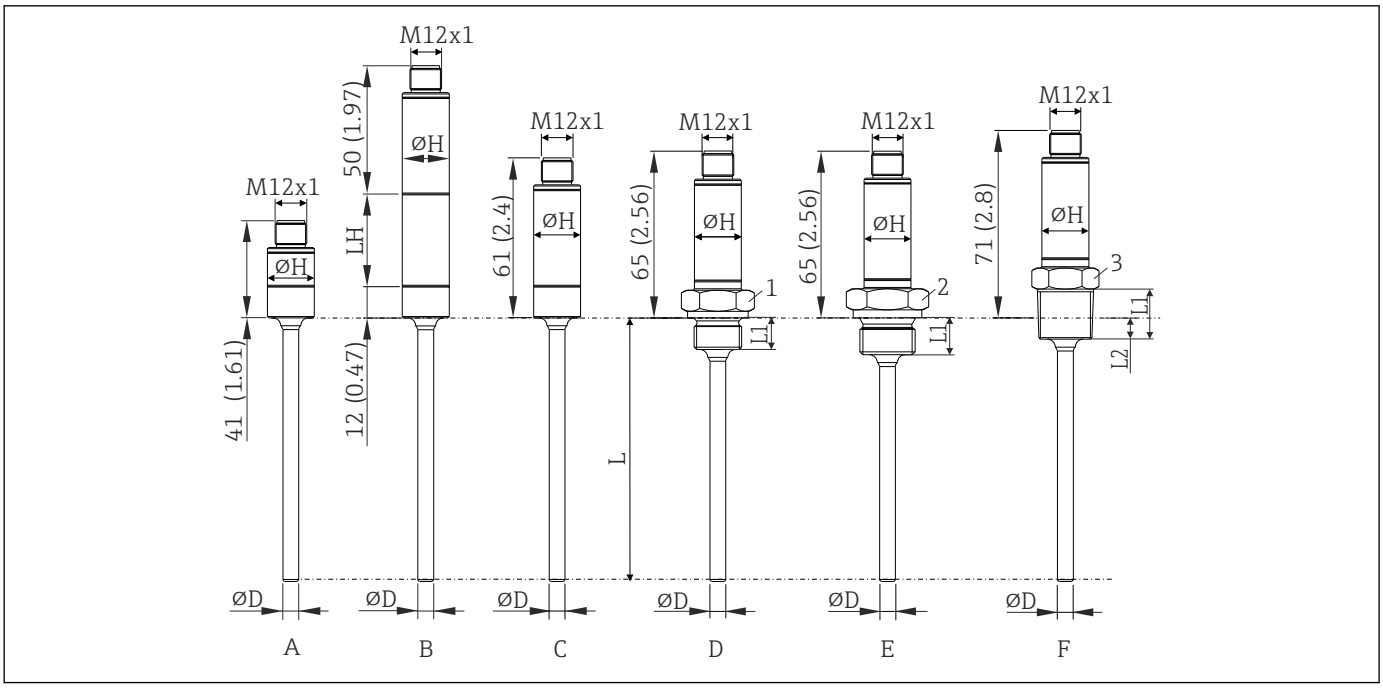

A0020192

7 Dimensions in mm (in)

L Insertion length L, variable 40 to 600 mm (1.6 to 23.6 in)
ØD Diameter D 6 mm (0.25 in)
ØH Sleeve diameter 18 mm (0.71 in)

Item	Version	Thread length L_1	Thread length L2	$P_{max.}$
A	Shortened sleeve (without built-in transmitter, without extension neck, without process connection). For suitable welding bosses and compression fittings, see the Accessories section.	-	-	-
B	With extension neck; L_H = Extension neck length 35 mm or 50 mm (1.38 in or 1.97 in), without process connection. For suitable welding bosses and compression fittings, see the Accessories section.	-	-	-
C	Without extension neck, without process connection. For suitable welding bosses and compression fittings, see the Accessories section.	-	-	-
D	Without extension neck, metric threaded process connection: ▪ M14x1.5 (1 = SW/AF19) ▪ M18x1.5 (1 = SW/AF24)	12 mm (0.47 in)	-	100 bar (1450 psi)
E	Without extension neck, threaded process connection, cylindrical as per ISO 228: ▪ G¼" (2 = SW/AF19) ▪ G½" (2 = SW/AF27)	12 mm (0.47 in) 14 mm (0.55 in)	- -	
F	Without extension neck, threaded process connection in inches, conical: ▪ ANSI NPT ¼" (3 = SW/AF19) ▪ ANSI NPT ½" (3 = SW/AF27) ▪ BSPT R ½" (3 = SW/AF/22)	14.3 mm (0.56 in) 19 mm (0.75 in) 19 mm (0.75 in)	5.8 mm (0.23 in) 8.1 mm (0.32 in) 8.1 mm (0.32 in)	

esign, dimensions

Thermometer for hygienic applications

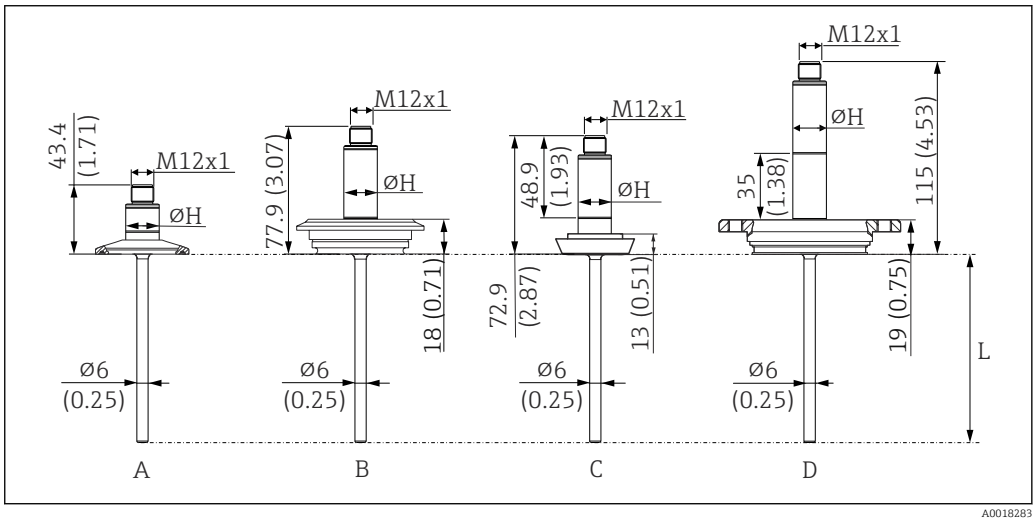

8 *Dimensions in mm (in)*

L Insertion length L, variable 40 to 600 mm (1.6 to 23.6 in)
ØH Sleeve diameter 18 mm (0.71 in)

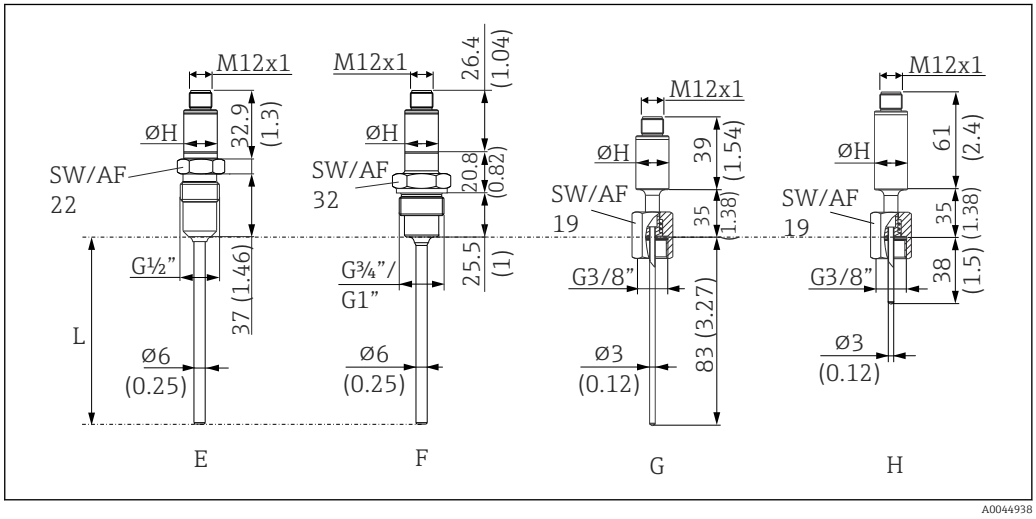

9 *Dimensions in mm (in)*

L Insertion length L, variable 40 to 600 mm (1.6 to 23.6 in)
ØH Sleeve diameter 18 mm (0.71 in)

Item	Version
A	Shortened sleeve (without built-in transmitter, without extension neck), with 1" clamp process connection (example for minimum length)
B	Without extension neck, process connection Varivent F
C	Without extension neck, process connection according to DIN 11851
D	With extension neck 35 mm (1.38 in), with APV-INLINE process connection (example for maximum length)
E	Shortened sleeve (without built-in transmitter, without extension neck), process connection metal sealing system for hygienic processes, G½" thread. Suitable welding boss available as an accessory.
F	Shortened sleeve (without built-in transmitter, without extension neck), process connection for hygienic processes, G¾" or G1" thread, material 316L (1.4404). Suitable Liquiphant weld-in adapter available as an accessory.

Item	Version
G	Shortened sleeve (without built-in transmitter), with extension neck, insertion length 83 mm (3.27 in)
H	With extension neck, insertion length 38 mm (1.5 in)

Weight

0.2 to 2.5 kg (0.44 to 5.5 lbs) for standard versions

Material

The temperatures for continuous operation specified in the following table are only intended as reference values for use of the various materials in air and without any significant compressive load. The maximum operating temperatures can be reduced considerably in cases where abnormal conditions such as high mechanical load occur or in aggressive media.

Description	Short form	Recommended max. temperature for continuous use in air	Properties
AISI 316L (corresponds to 1.4404 or 1.4435)	X2CrNiMo17-13-2, X2CrNiMo18-14-3	650 °C (1202 °F) [1]	▪ Austenitic, stainless steel ▪ High corrosion resistance in general ▪ Particularly high corrosion resistance in chlorine-based and acidic, non-oxidizing atmospheres through the addition of molybdenum (e.g. phosphoric and sulfuric acids, acetic and tartaric acids with a low concentration) ▪ Increased resistance to intergranular corrosion and pitting

1) Can be used to a limited extent up to 800 °C (1472 °F) for low compressive loads and in non-corrosive media. More information is available from the sales organization.

Surface roughness

Specifications for product wetted parts in accordance with EN ISO 21920:

Standard surface, mechanically polished [1]	R_a ≤ 0.76 µm (30 µin)
Mechanically polished [1], buffed [2]	R_a ≤ 0.38 µm (15 µin) [3]
Mechanically polished [1], buffed and electropolished	R_a ≤ 0.38 µm (15 µin) [3]+ electropolished

1) Or equivalent treatment that guarantees R_a max.
2) Not compliant with ASME BPE
3) T16% for direct-contact measuring inserts without thermowell, not compliant with ASME BPE

Process connections for hygienic applications

All dimensions in mm (in).

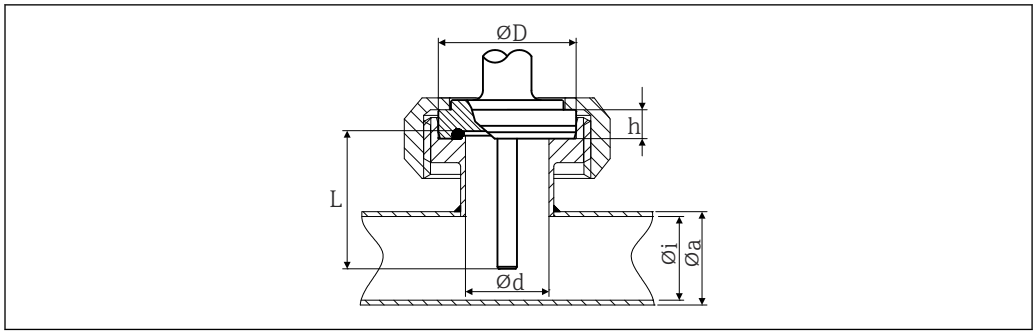

10 Aseptic pipe union according to DIN 11864-1, Form A

Version	Dimensions					Technical properties
	Φd	ΦD	Φi	Φa	h	
DN25	26 mm (1.02 in)	42.9 mm (1.7 in)	26 mm (1.02 in)	29 mm (1.14 in)	9 mm (0.35 in)	▪ $P_{max.}$ = 40 bar (580 psi) ▪ 3-A® marked and EHEDG certified ▪ ASME BPE compliance

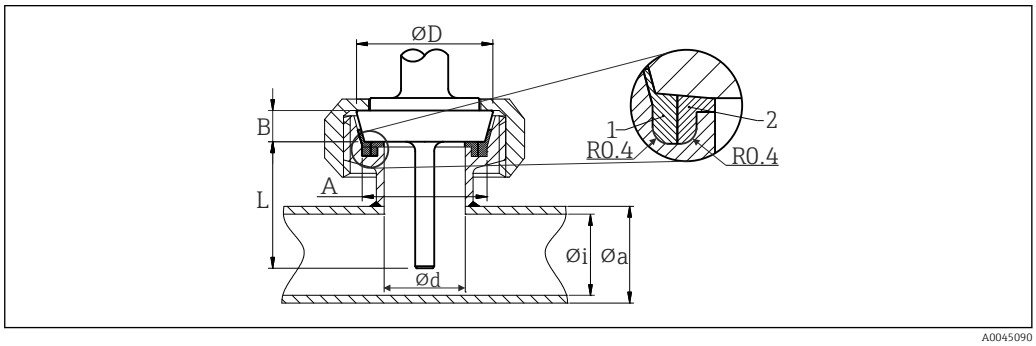

11 Milk pipe connection according to DIN 11851

1 Centering ring
2 Sealing ring

- 3-A® marked and EHEDG certified (only with EHEDG-certified and self-centering sealing ring).
- ASME BPE compliance

Type						Technical properties
Version [1]	Dimensions					$P_{max.}$
	ΦD	A	B	Φi	Φa	
DN25	44 mm (1.73 in)	30 mm (1.18 in)	10 mm (0.39 in)	26 mm (1.02 in)	29 mm (1.14 in)	40 bar (580 psi)
DN40	56 mm (2.2 in)	42 mm (1.65 in)	10 mm (0.39 in)	38 mm (1.5 in)	41 mm (1.61 in)	40 bar (580 psi)
DN50	68 mm (2.68 in)	54 mm (2.13 in)	11 mm (0.43 in)	50 mm (1.97 in)	53 mm (2.1 in)	25 bar (363 psi)

1) Pipes in accordance with DIN 11850

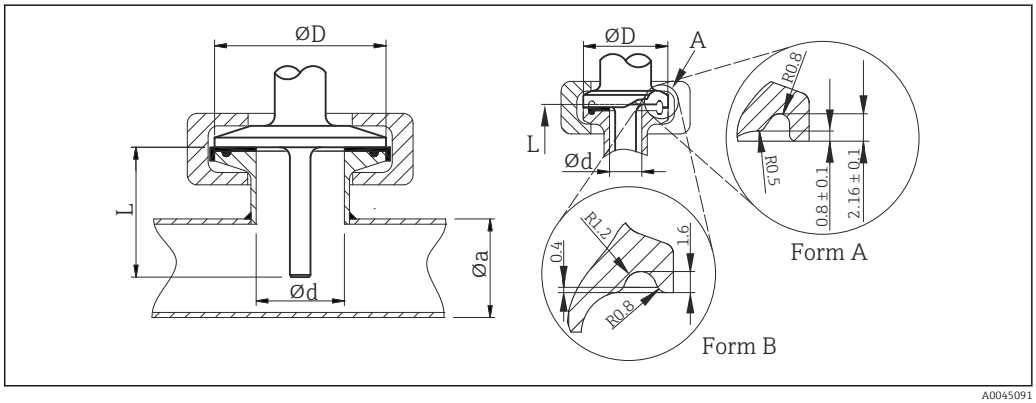

12 Clamp according to ISO 2852

A Form A: in compliance with ASME BPE Type A and Form B: in compliance with ASME BPE Type B and ISO 2852

Version	Dimensions		Technical properties	Conformity
Φd: [1]	ΦD	Φa		
Microclamp [2] DN8-18 (0.5"-0.75") [3], Form A	25 mm (0.98 in)	-	▪ $P_{max.}$ = 16 bar (232 psi), depends on clamp ring and suitable seal ▪ 3-A® marked	ASME BPE Type A
Clamp DN25-38 (1"-1.5"), Form B	50.5 mm (1.99 in)	29 to 42.4 mm (1.14 to 1.67 in)	▪ $P_{max.}$ = 16 bar (232 psi), depends on clamp ring and suitable seal ▪ 3-A® marked and EHEDG certified (combined with Combifit seal) ▪ Can be used with "Novaseptic Connect (NA Connect)" which enables flush-mount installation	ASME BPE Type B; ISO 2852
Clamp DN40-51 (2"), Form B	64 mm (2.52 in)	44.8 to 55.8 mm (1.76 to 2.2 in)		ASME BPE Type B; ISO 2852
Clamp DN63,5 (2.5"), Form B	77.5 mm (3.05 in)	68.9 to 75.8 mm (2.71 to 2.98 in)		ASME BPE Type B; ISO 2852

1) Pipes in accordance with ISO 2037 and BS 4825 Part 1
2) Microclamp (not in ISO 2852); no standard pipes
3) DN8 (0.5") only possible with thermowell diameter = 6 mm (¼ in)

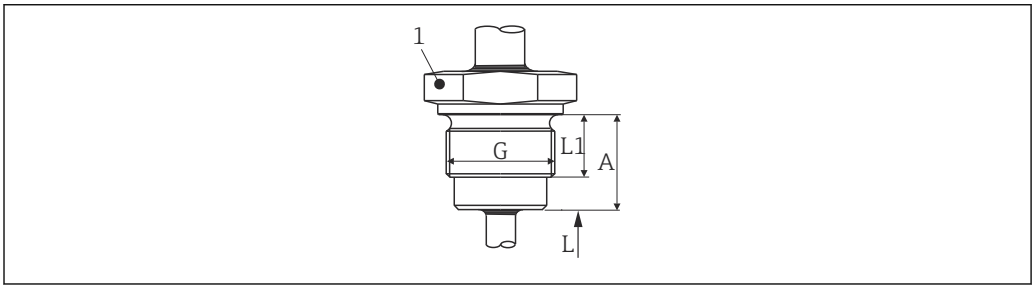

13 Thread according to ISO 228 for weld-in adapter Liquiphant

Version G	Dimensions			Technical properties
	L1 thread length	A	1 (SW/AF)	
G¾" for FTL20/31/33 adapter	16 mm (0.63 in)	25.5 mm (1 in)	32	▪ $P_{max.}$ = 25 bar (362 psi) at max. 150 °C (302 °F) ▪ $P_{max.}$ = 40 bar (580 psi) at max. 100 °C (212 °F) ▪ 3-A® marked and EHEDG certified in conjunction with FTL31/33/50 adapter ▪ ASME BPE compliance
G¾" for FTL50 adapter				
G1" for FTL50 adapter	18.6 mm (0.73 in)	29.5 mm (1.16 in)	41	

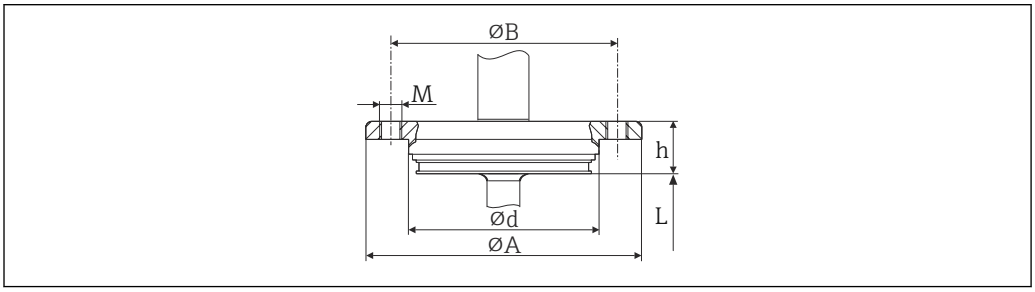

14 APV Inline

Version	Dimensions					Technical properties
	ΦD	ΦA	ΦB	M	h	
DN50	69 mm (2.72 in)	99.5 mm (3.92 in)	82 mm (3.23 in)	2xM8	19 mm (0.75 in)	▪ $P_{max.}$ = 25 bar (362 psi) ▪ 3-A® marked and EHEDG certified ▪ ASME BPE compliance

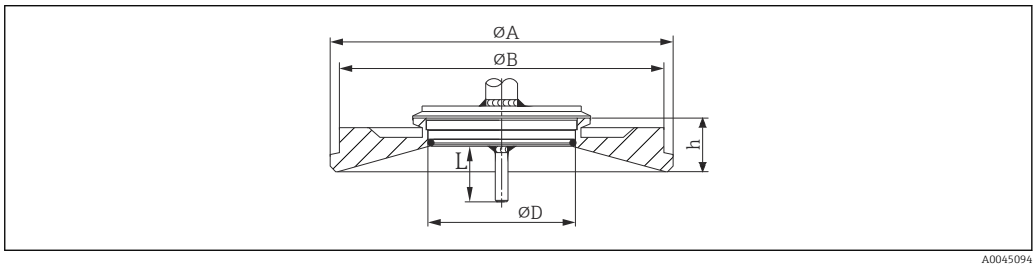

15 *Varivent®*

Version	Dimensions				Technical properties	
	ΦD	ΦA	ΦB	h	$P_{max.}$	
Type F	50 mm (1.97 in)	145 mm (5.71 in)	135 mm (5.31 in)	24 mm (0.95 in)	10 bar (145 psi)	▪ 3-A® marked and EHEDG certified ▪ ASME BPE compliance
Type N	68 mm (2.67 in)	165 mm (6.5 in)	155 mm (6.1 in)	24.5 mm (0.96 in)		

The VARINLINE® housing connection flange is suitable for weld-in into the conical or torispherical head in tanks or vessels with a small diameter (≤ 1.6 m (5.25 ft)) and up to a wall thickness of 8 mm (0.31 in).

Varivent® Type F cannot be used for installations in pipes in combination with the VARINLINE® housing connection flange.

Type	Version	Technical properties
Metal sealing system **G½"** 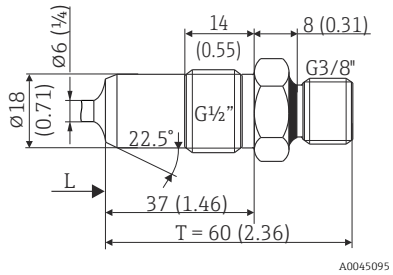	Thermowell diameter 6 mm (¼ in)	$P_{max.}$ = 16 bar (232 psi) Maximum torque = 10 Nm (7.38 lbf ft)

Type	Version	Technical properties
Process adapter 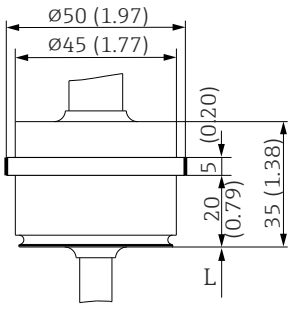	D45	-

Type	Version	Technical properties
Spring-loaded cap-nut 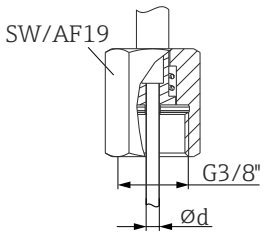	G3/8" thread for mounting in a thermowell	-

Thermowell design, dimensions

Thermometer for hygienic applications

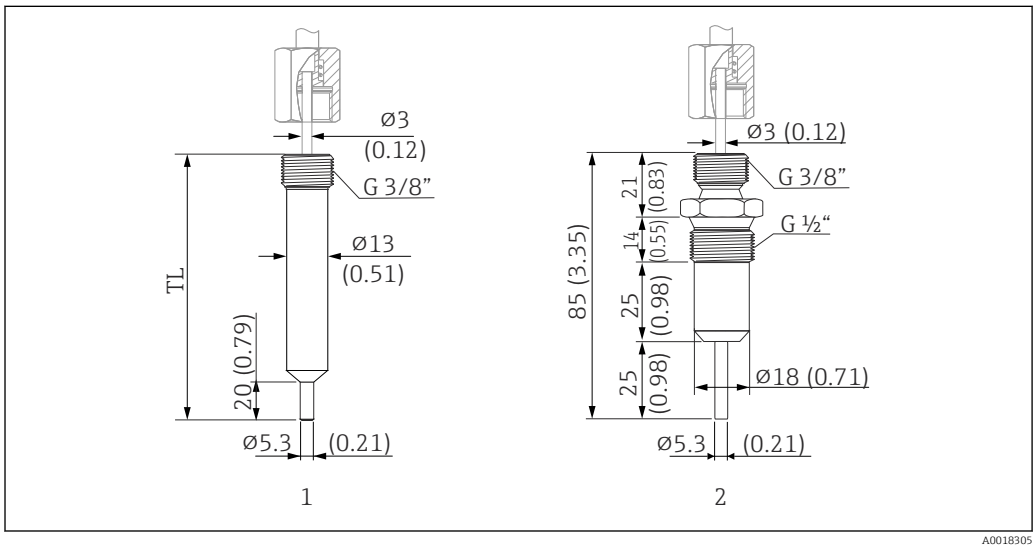

16 Thermowell for connection to the compact thermometer with spring-loaded cap-nut and G3/8" thread. Dimensions in mm (in)

1 Cylindrical thermowell, TL = 70 mm (2.76 in),option WA or 85 mm (3.35 in),option WB, with 3-A® symbol, $P_{max.}$ = 250 bar (3 626 psi) with maximum flow velocity of 40 m/s (131 ft/s)

2 Thermowell, metal-to-metal seal, $P_{max.}$ = 16 bar (232 psi)

Human interface

Local operation

There are no operating elements directly on the device. The temperature transmitter is configured via remote operation.

Local display

There are no display elements directly on the device. The measured value and diagnostic messages, for instance, can be accessed via the interface with PC software.

Remote operation

Configuration via configuration set TXU10, for PC-programmable thermometer - with setup software (ReadWin 2000) and interface for PC with USB port.

The software can be downloaded free of charge from the following website: www.endress.com/readwin

Certificates and approvals

Current certificates and approvals for the product are available at www.endress.com on the relevant product page:

1. Select the product using the filters and search field.
2. Open the product page.
3. Select **Downloads**.

Hygiene standard

- EHEDG certification, type EL CLASS I. EHEDG-certified/tested process connections. → 16
- 3-A Authorization No. 1144, 3-A Sanitary Standard 74-07. Listed process connections. → 16
- ASME BPE, declaration of conformity can be ordered for options indicated
- FDA-compliant
- All surfaces in contact with the medium are free from materials derived from bovine animals or other livestock (ADI/TSE)

Materials in contact with food/product (FCM)

The process contact parts (FCM) are in conformity with the following European Regulations:
- Regulation (EC) No 1935/2004, on materials and articles intended to come into contact with food, article 3, paragraph 1, article 5 and 17.
- Regulation (EC) No 2023/2006 on good manufacturing practice for materials and articles intended to come into contact with food.
- Regulation (EU) No 10/2011 on plastic materials and articles intended to come into contact with food.

Ordering information

Detailed ordering information is available from your nearest sales organization www.addresses.endress.com or in the Product Configurator at www.endress.com:

1. Select the product using the filters and search field.
2. Open the product page.
3. Select **Configuration**.

Product Configurator - the tool for individual product configuration
- Up-to-the-minute configuration data
- Depending on the device: direct input of information specific to the measuring point, such as the measuring range or operating language
- Automatic verification of exclusion criteria
- Automatic creation of the order code and its breakdown in PDF or Excel output format
- Ability to order directly in the Endress+Hauser Online Shop

Accessories

The accessories currently available for the product can be selected at www.endress.com:

1. Select the product using the filters and search field.
2. Open the product page.
3. Select **Spare parts & Accessories**.

Device-specific accessory

All dimensions in mm (in).

Accessory	Description
Welding boss with sealing taper 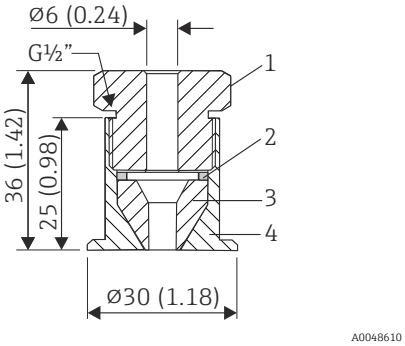 *1 Pressure screw, 303/304, width across flats 24 mm* *2 Washer, 303/304* *3 Sealing taper, PEEK* *4 Collar welding boss, 316L*	▪ Collar welding boss movable with sealing taper, washer and pressure screw G½" ▪ Material of parts in contact with the process 316L, PEEK ▪ Max. process pressure 10 bar (145 psi)

Accessory	Description
Collar welding boss 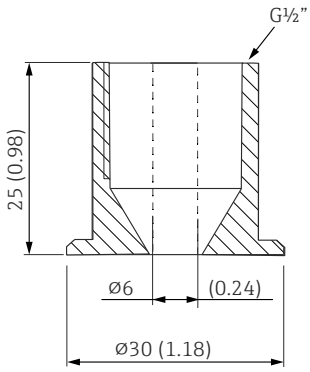 	Material of parts in contact with the process 316L

Accessory	Description
Compression fitting 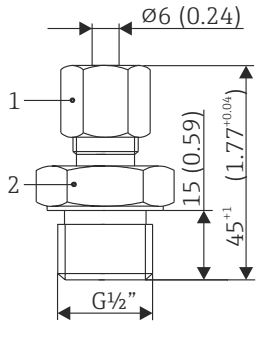 *1 AF14* *2 AF27*	▪ Adjustable clamping ring, for process connections G½", G¾", G1", NPT ½", etc. ▪ Material of compression fitting and parts in contact with the process, 316L ▪ Order number TA50-HB (other versions can be configured in the TA50 structure)

Accessory	Description
Welding boss with sealing taper (metal-metal) 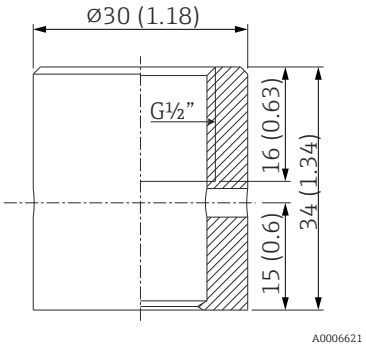 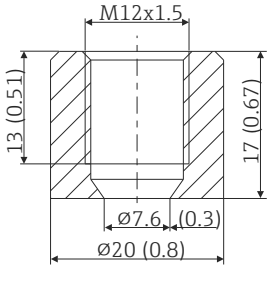 	▪ Welding boss for G½" or M12x1.5 thread ▪ Metal-sealing; conical ▪ Material of parts in contact with the process 316L/1.4435 ▪ Max. process pressure 16 bar (232 PSI)
Dummy plug 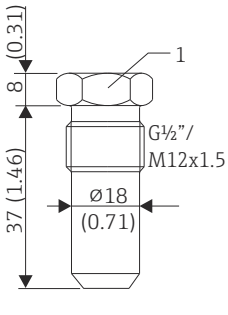 *1 AF22*	▪ Dummy plug for G½” or M12x1.5 conical metal-sealing welding boss ▪ Material: SS 316L/1.4435

Weld-in adapter

For more information about order codes and hygienic compliance of the adapters and spare parts, see Technical Information (TI00426F).

Weld-in adapter	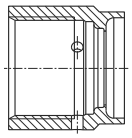 A0008246	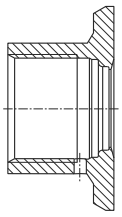 A0008251	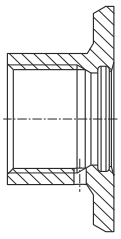 A0008256	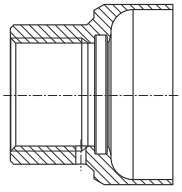 A0011924	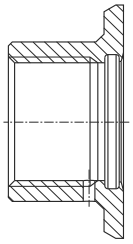 A0008248	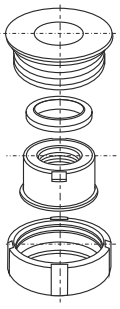 A0008253
	G ¾", d=29 for pipe-mounting	**G ¾", d=50 for vessel-mounting**	**G ¾", d=55 with flange**	**G 1", d=53 without flange**	**G 1", d=60 with flange**	**G 1" adjustable**

Material	316L (1.4435)	316L (1.4435)	316L (1.4435)	316L (1.4435)	316L (1.4435)	316L (1.4435)
Roughness µm (µin) process side	≤1.5 (59.1)	≤0.8 (31.5)	≤0.8 (31.5)	≤0.8 (31.5)	≤0.8 (31.5)	≤0.8 (31.5)

Maximum process pressure for the weld-in adapters:
- 25 bar (362 PSI) at maximum 150 °C (302 °F)
- 40 bar (580 PSI) at maximum 100 °C (212 °F)

Online tools

Product information over the entire life cycle of the device: www.endress.com/onlinetools

Communication-specific accessory

Coupling

Accessory	Description
▪ M12x1 coupling; elbowed, for termination of connecting cable by user ▪ Connection to M12x1 housing connector ▪ Body materials PBT/PA ▪ Coupling nut GD-Zn, nickel-plated ▪ IP67 degree of protection (fully locked) ▪ Voltage: max. 250 V ▪ Current carrying capacity: max. 4 A ▪ Temperature: −40 to 85 °C	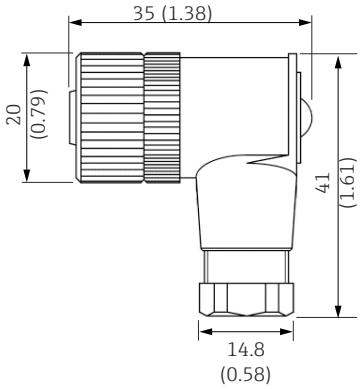

Accessory	Description
▪ PVC cable, 4 x 0.34 mm² (22 AWG) with M12x1 coupling, elbow plug, screw plug, length 5 m (16.4 ft) ▪ IP69K protection (optional) ▪ Voltage: max. 250 V ▪ Current carrying capacity: max. 4 A ▪ Temperature: −25 to 70 °C Wire colors: ▪ 1 = BN brown ▪ 2 = WH white ▪ 3 = BU blue ▪ 4 = BK black	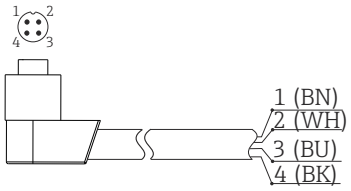

Accessory	Description
▪ PVC cable, 4 x 0.34 mm² (22 AWG) with M12x1 coupling nut made of epoxy coated zinc, straight socket contact, screw plug, 5 m (16.4 ft) ▪ IP69K protection (optional) ▪ Voltage: max. 250 V ▪ Current carrying capacity: max. 4 A ▪ Temperature: −20 to 105 °C Wire colors: ▪ 1 = BN brown ▪ 2 = WH white ▪ 3 = BU blue ▪ 4 = BK black	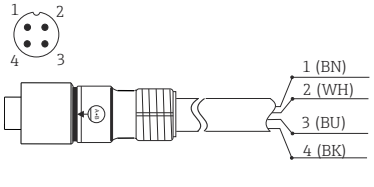

Accessory	Description
Configuration kit for PC-programmable transmitters - setup program and interface cable (4-pin connector) for PC with USB port + adapter for compact thermometer with M12x1 thread Order code: TXU10	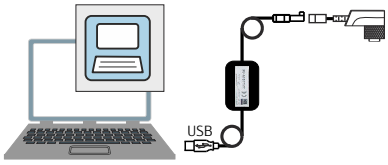

Service-specific accessories

Applicator

Software for selecting and sizing Endress+Hauser measuring devices:
- Calculation of all the necessary data for identifying the optimum measuring device: e.g. pressure loss, accuracy or process connections.
- Graphic illustration of the calculation results

Administration, documentation and access to all project-related data and parameters over the entire life cycle of a project.

Applicator is available:
https://portal.endress.com/webapp/applicator

Configurator

Product Configurator - the tool for individual product configuration
- Up-to-the-minute configuration data
- Depending on the device: direct input of information specific to the measuring point, such as the measuring range or operating language
- Automatic verification of exclusion criteria
- Automatic creation of the order code and its breakdown in PDF or Excel output format
- Ability to order directly in the Endress+Hauser Online Shop

The Configurator is available at www.endress.com on the relevant product page:

1. Select the product using the filters and search field.
2. Open the product page.
3. Select **Configuration**.

System components

Process indicators from the RIA product family

Easily readable process indicators with various functions: loop-powered indicators for displaying 4 to 20 mAvalues, display of up to four HART variables, process indicators with control units, limit value monitoring, sensor power supply, and galvanic isolation.

Universal application thanks to international hazardous area approvals, suitable for panel mounting or field installation..

For more information, please refer to: www.endress.com

RN series active barrier

Single- or two-channel active barrier for safe separation of 0/4 to 20 mA standard signal circuits with bidirectional HART transmission. In the signal duplicator option, the input signal is transmitted to two galvanically isolated outputs. The device has one active and one passive current input; the outputs can be operated actively or passively.

For more information, please refer to: www.endress.com

Documentation

The following document types are available in the Downloads area of the Endress+Hauser website (www.endress.com/downloads), depending on the device version:

Document type	Purpose and content of the document
Technical Information (TI)	**Planning aid for your device** The document contains all the technical data on the device and provides an overview of the accessories and other products that can be ordered for the device.
Brief Operating Instructions (KA)	**Guide that takes you quickly to the 1st measured value** The Brief Operating Instructions contain all the essential information from incoming acceptance to initial commissioning.
Operating Instructions (BA)	**Your reference document** The Operating Instructions contain all the information that is required in various phases of the life cycle of the device: from product identification, incoming acceptance and storage, to mounting, connection, operation and commissioning through to troubleshooting, maintenance and disposal.
Description of Device Parameters (GP)	**Reference for your parameters** The document provides a detailed explanation of each individual parameter. The description is aimed at those who work with the device over the entire life cycle and perform specific configurations.
Safety instructions (XA)	Depending on the approval, safety instructions for electrical equipment in hazardous areas are also supplied with the device. These are an integral part of the Operating Instructions. The nameplate indicates which Safety Instructions (XA) apply to the device.
Supplementary device-dependent documentation (SD/FY)	Always comply strictly with the instructions in the relevant supplementary documentation. The supplementary documentation is a constituent part of the device documentation.

LENNTECH
WATER TREATMENT SOLUTIONS
info@lenntech.com Tel. +31-152-610-900
www.lenntech.com Fax. +31-152-616-289

Endress+Hauser
People for Process Automation