Submersible Pump in Discharge Tube

Amacan P

50 Hz

Type Series Booklet

Legal information/Copyright

Type Series Booklet Amacan P

All rights reserved. The contents provided herein must neither be distributed, copied, reproduced, edited or processed for any other purpose, nor otherwise transmitted, published or made available to a third party without the manufacturer's express written consent.

Subject to technical modification without prior notice.

© KSB SE & Co. KGaA, Frankenthal 2024-04-16

Contents

Water Applications: Water Transport 4
Submersible pumps in discharge tubes 4
Amacan P 4
Main applications 4
Fluids handled 4
Operating data 4
Designation 4
Design details 5
Materials 6
Coating and preservation 6
Product benefits 6
Acceptance tests and warranty 7
Selection information 7
Overview of product features / selection tables 7
Related documents 11
Data to be indicated in the purchase order 12
Selection chart 13
Characteristic curves 14
Dimensions 39
Installation types 44
Scope of supply 45
Accessories 46
General assembly drawings 51

Water Applications: Water Transport

Submersible pumps in discharge tubes

Amacan P

Main applications

- Irrigation pumping stations
- Drainage pumping stations
- Stormwater pumping stations
- Raw water pumps and clean water pumps in waterworks and waste water treatment plants
- Cooling water pumps in power stations and industry
- Industrial water supply
- Water pollution control
- Flood control
- Aquaculture

Fluids handled

- Waste water
- Sludge
- Surface water
- Stormwater
- Grey water
- Seawater
- Brackish water

Operating data

Table 1: Operating properties

Characteristic		Value
Flow rate	Q [l/s]	≤ 7000
	Q [m³/h]	≤ 25200
Head	H [m]	≤ 12
Motor rating	P_2 [kW]	≤ 680
Fluid temperature	T [°C]	≤ +40

Designation

Example: Amacan PA4 800-540 / 120 6UTG1

Table 2: Designation key

Code	Description	
Amacan	Type series	
P	Impeller type	
	P	Propeller
A	Pressure class	
	A	
	B	
4	Number of blades	
800	Nominal diameter of the discharge tube [mm]	
540	Nominal impeller diameter [mm]	
120	Motor size	
6	Number of motor poles	
UT	Motor version (⇨ Page 10)	
	UA	Non-explosion-proof, standard (sizes 500-270 ... 600-350)
	XA	Explosion-proof to ATEX (sizes 500-270 ... 600-350)
	UT	Non-explosion-proof, standard (sizes 700-470 ... 1600-1060)
	XT	Explosion-proof to ATEX (sizes 700-470 ... 1500-1060)
G1	Material variant (⇨ Page 6)	
	G1	Grey cast iron, standard material variant
	G3	Grey cast iron with Zn anodes, shaft made of 1.4057 stainless steel

1580.5/13-EN

Design details

Design

- Fully floodable submersible pump in discharge tube (submersible motor pump)
- Not self-priming
- Close-coupled design
- Single-stage
- Vertical installation

Drive

- Three-phase asynchronous squirrel-cage motor
- Type of protection Ex db IIB (applies to explosion-proof pump sets only)
- Enclosure: IP68 to EN 60529/IEC529

Shaft seal

- Two bi-directional mechanical seals in tandem arrangement, with liquid reservoir
- Leakage chamber

Impeller type

- Axial propeller in ECB design

Bearings

- Grease-lubricated rolling element bearings

1580.5/13-EN

Materials

Table 3: Overview of materials depending on material variant

Part No.	Description	Material variant	
		G1	G3[1] (seawater variant)
112	Pump bowl	EN-GJL-200 (JL 1030)	
138	Bellmouth	EN-GJL-200 (JL 1030)	
230	Impeller	1.4517	
350 / 330	Bearing housing / bearing bracket	EN-GJL-250 (JL 1040)	
360	Bearing cover	EN-GJL-250 (JL 1040)	
412	O-ring	NBR[2] (Viton FPM)[3]	
433	Mechanical seal (pump end)	SiC /SiC (bellows NBR[2], Viton - FPM[3])	
	Mechanical seal (drive end)	Carbon/SiC (bellows NBR[2], Viton - FPM[3])	
502	Casing wear ring	Stainless steel	
571	Bail	EN-GJS-400-15 (JS 1030)/S235JRG2[4]	
811	Motor housing	EN-GJL-250 (JL 1040)	
812	Motor housing cover	EN-GJL-250 (JL 1040)[5]	
818	Shaft (rotor)	1.4021	1.4057
834	Cable gland	-	
	Cable gland housing	EN-GJL-250 (JL 1040)	
Var.	Bolts/screws	Stainless steel	
99-16	Anode	-	Zn
Other materials on request.			

Description of materials

Duplex stainless steel (1.4517 or technically equivalent material)

This type of carbon steel is resistant to cavitation, has excellent strength values and is used for high circumferential speeds. An excellent resistance to pitting corrosion makes ferritic-austenitic stainless carbon steel a popular choice for pumping acidic waste water with a high chloride content as well as seawater and brackish water. Thanks to its good chemical resistance, e.g. against waste water containing phosphorous and sulphuric acid, this material is used in a wide range of applications in the chemical industry and process engineering. Pumps made of duplex stainless steel have a very long service life, even when handling brines, chemical waste water (pH 1 - 12), grey water and landfill leachate.

Table 4: Material comparison

EN	ASTM
EN-GJL-200	A 48 Class 30 B
EN-GJL-250	A 48 Class 35 B
1.4517	A 890 CD 4 MCu
1.4021	A 276 Type 420
1.4057	A 276 Type 431
NBR	NBR
FPM	FKM
EN-GJS-400-15	A 536: 60–40–18
S235JR	A 284 B

Coating and preservation

Paint

- **Surface treatment:** SA 2 1/2 (SIS 055900) AN 1865
- **Primer:** primer coat on unfinished casting
- **Top coat:** environmentally friendly KSB standard coating (RAL 5002)

Special coating

- Available on request (extra charge and a longer delivery period apply).

Product benefits

- The pump's own weight ensures self-centring seating in the discharge tube, and an O-ring seals it; quick to install or remove.
- The slim motor keeps discharge tube flow losses down.
- High reliability thanks to bearing temperature monitoring, vibration sensor, thermal motor protection, leakage sensors in the motor space and connection space as well as leakage monitoring of the mechanical seal system.
- Low-vibration hydraulic system; inlet ribs and optimised bellmouth for vortex-free inflow.
- Absolutely water-tight resin-sealed cable entries prevent any water from entering the motor – even in the event of a damaged cable.

1 Pump set with cathodic protection (anodes to be checked every 6 to 12 months) and top coat of 250 µm
2 Nitrile rubber (Perbunan)
3 FPM fluorocarbon rubber variant available as an option against a surcharge
4 EN-GJS-400-15 (JS 1030) for motors: 80 6 … 205 6, 55 8 … 160 8, 40 10 … 120 10; all other motors: S235JR
5 For P1600-1060 in S235JR

Acceptance tests and warranty

Functional test

- Every pump undergoes functional testing to KSB standard ZN 56525.
- Operating data is guaranteed to DIN EN ISO 9906 / 2 / 2B.

Acceptance inspections/tests

- Acceptance test to ISO/DIN or comparable standards available against a surcharge.
- Acceptance inspections/tests to Hydraulic Institute on request.

Warranty

- Quality is assured by means of an audited and certified quality assurance system to DIN EN ISO 9001.

Selection information

Information for pump selection

The guaranteed point of submersible pumps in discharge tubes is measured at a head 0.5 m above the motor (DIN 1184). The documented characteristic curves refer to this data. This must be taken into account when calculating system losses. The indicated heads and performance data apply to pumped fluids with a density ρ = 1 kg/dm³ and a kinematic viscosity v of up to 20 mm²/s.

- Adjust the power input to the density of the fluid handled:
  P_2 (required) = ρ [kg/dm³] (fluid handled) × P_2 (documented)
- Select the operating point with the largest power input within an operating range. Select a motor size providing a power reserve to compensate the tolerances in the system characteristic / pump characteristic.

Table 5: Recommended motor power reserve[6)]

P_2	Reserve	
[kW]	Mains operation	With frequency inverter
≤ 30	10 %	15 %
> 30	5 %	10 %

Intake chamber

Determine the minimum water level t_{1min} (diagram in general arrangement drawing):
The minimum water level t_{1min} is the water level required in the pump's suction chamber to ensure:

- that there is a sufficient liquid cover above the hydraulic system (propeller) (shown in diagram depending on pump size)
- that the pump does not draw in air-entraining vortices (shown in diagram depending on flow rate)
- that there is no cavitation in the hydraulic system (check against the $NPSH_{required}$ value indicated in the technical literature). The following conditions must be met:
  - $NPSH_{available} > NPSH_{required}$ + safety allowance
  - $NPSH_{available} = 10.0 + (t_1 - t_3 - h_7/2)$
  - Safety allowance:
    up to $Q_{opt} \Rightarrow$ 0.5 m
    larger than $Q_{opt} \Rightarrow$ 1.0 m

Head (H)

The total pump head is composed as follows:
$H = H_{geo} + \Delta H_V$

H_{geo} (static head)

- Without discharge elbow: difference between the suction-side water level and the overflow edge
- With discharge elbow: difference between suction-side and discharge-side water level

ΔH_V (losses in the system)

- Starting 0.5 m downstream of the pump: e.g. pipe friction, elbow, swing check valve, etc.

Inlet losses, riser losses and elbow losses

Losses are caused by the inlet, riser and elbow (and/or free discharge).

- Losses in the riser up to the indicated reference level (0.5 m above the motor) are taken into account in the documented characteristic curves.
- Inlet and elbow losses are system losses. These losses must be taken into account for selection.
- For information on structural requirements, pump installation and pump sump design please refer to the KSB know-how brochure "Planning Information for Amacan Submersible Pumps in Discharge Tubes" 1579.025.

Overview of product features / selection tables

Overview of fluids handled

The table below for your guidance is based on KSB's long-standing experience. The data are standard values and are not to be considered as generally binding recommendations. More detailed advice is available from KSB. Make use of our laboratory's expertise when selecting materials.

6 If larger power reserves are stipulated by local regulations, these larger reserves must be provided.

Table 6: Selection aid for material variants and fluid temperature per fluid

Fluid handled[7]	Max. permissible fluid temperature [°C]	Material variants	Casing wear ring with a groove for flushing[8]	Screen[9]	Comments, further recommendations
Waste water					
▪ Industrial, corrosive, non-abrasive, slightly acidic; pH value ≥ 6	40	G1	○	✓	2-component high solid epoxy finish coat (RAL 5002) 250 µm required
▪ Industrial, corrosive, non-abrasive, with lacquer/paint/varnish suspensions	40	G1	○	-	Lacquer/paint/varnish suspension = free of solvents
▪ Industrial, corrosive, non-abrasive fluids containing faeces	40	G1	✓	✓	-
▪ Industrial, corrosive, non-abrasive fluids not containing faeces	40	G1	○	✓	-
▪ Municipal, treated	40	G1	○	✓	-
Suspended solids, water/sand mixture	40	G1	✓	-	Up to 200 mg/l
Sludge	40	G1	✓	-	Up to 2 % dry solids content
Water, seawater and brackish water	25[10]	G3	○	-	Use of anodes[11] and 2-component high solid epoxy finish coat (RAL 5002) 250 µm required
Water, cooling water	40	G1	○	-	-
Water, surface water					
▪ River water	40	G1	✓	✓	-
▪ No details specified	40	G1	✓	✓	-
▪ Lake water, fresh water	40	G1	○	✓	-
▪ Lake water, dam water	40	G1	○	-	-
Water, stormwater					
▪ With strainer	40	G1	○	-	-
▪ Without strainer	40	G1	✓	✓	-
Water, raw water	40	G1	○	-	-
Water, contaminated water					
▪ Slightly contaminated water	40	G1	○	-	-
▪ Mixed water, with strainer	40	G1	○	-	-
▪ Mixed water, without strainer	40	G1	✓	✓	-
▪ Mixed water containing faeces	40	G1	✓	✓	-
▪ Mixed water not containing faeces	40	G1	✓	✓	-
Water, clean water	40	G1	○	-	-

Table 7: Key to the symbols

Symbol	Description
✓	Required
○	Optional
-	Not required

Table 8: Openings of screen bars

Size	Required space between screen bars [mm]
500-270	30
600-350	30
700-470	40
800-540	60
900-540	60
1000-700	80

7 Fluids to be pumped which are not listed in this table usually require higher-grade materials. Contact KSB.
8 Using a casing wear ring with a groove for flushing will reduce the efficiency by 2 % to 3 %.
9 See table "Openings of screen bars".
10 For t > 25 °C contact KSB (stainless steel variant).
11 Efficiency reduced by 2 % to 3 %; anode to be checked every 6 to 12 months

Size	Required space between screen bars [mm]
1200-870	80
1500-1060	80
1600-1060	80

Overview of product features

Table 9: Material variants G1, G3

Feature	Motor version					
	UAG/XAG	UTG/XTG				
Motor size						
4-pole	10 4 … 70 4	–	–	–	–	–
6-pole	6 6 … 25 6	47 6 … 120 6	155 6 … 205 6	–	–	–
8-pole	–	30 8 … 100 8	120 8 … 160 8	205 8 … 290 8	–	–
10-pole	–	–	60 10 … 120 10	200 10 … 250 10	310 10 … 470 10	–
12-pole	–	–	–	130 12 … 190 12	250 12 … 410 12	450 12 ... 680 12
14-pole	–	–	–	–	210 14 … 340 14	370 14 ... 440 14
Explosion protection						
Version U...	Not explosion-proof					
Version X...	Ⓔx ATEX II 2G T3					–
Motor						
Starting method	DOL	DOL or star-delta (690 V only DOL)				DOL
Voltage	400 V[12]					400 V[13]
Cooling	Cooled by surrounding fluid					
Immersion depth	12 m max.					
Power cable						
Type	See table "Overview of power cables"					
Length	10 m[14]					
Cable entry	Absolutely watertight					
Sealing elements						
Elastomer seals	Nitrile butadiene rubber NBR[15]					
Shaft seal	Bellows-type mechanical seal[16]					Mechanical seal with covered spring
Monitoring equipment						
Winding temperature	PTC thermistor					
Bearing temperature	Pump end PT100 Drive end Pt100	Pump end PT100[17]				Pump end PT100 Drive end PT100
Leakage in the motor space	Electrode monitoring the winding for leakage	Electrode monitoring the winding and connection space for leakage				
Mechanical seal leakage	Float switch in leakage area					
Vibration sensor	-	-[18]				
Casing wear ring	Standard design[19]					
Coating	Environmentally-friendly KSB standard coating, colour RAL 5002[20]					
Installation types	(⇨ Page 44)					
Maximum temperature of fluid handled						
Material variant G1	40 °C					
Material variant G3	25 °C					
Tests/inspections						
Hydraulic system	KSB standard (ZN 56525)[21]					
General	KSB standard (ZN 56525)[21]					

12 Optional: 500 V, 690 V
13 Optional: 690 V
14 Optional: up to 50 m
15 Optional: Viton = fluorocarbon rubber FPM
16 On P1500-1060 mechanical seal with covered spring
17 Optional: drive end PT100
18 Optional: internal vibration sensor
19 Optional: casing wear ring with groove for flushing (PA 1500-1060 and PA 1600-1060 are not fitted with a casing wear ring; as an option they can only be fitted with a casing wear ring with groove for flushing)
20 Optional: 250 µm
21 Optionally to ISO 9906/1/2/A

Table 10: Overview of connection cables

Feature	S1BN8-F rubber-sheathed cable	S07RC4N8-F rubber-sheathed cable
Design	Standard	Optional
Rated voltage	1000 V	750 V
EMC screening	-	✓
Insulation material	EPR[22)]	EPR[22)]
Maximum continuous temperature of insulation	90 °C	90 °C
For permanent immersion in waste water to DIN VDE 0282-16/HD22.16	✓	✓

Related documents

- General Arrangement Drawings 1580.39
- Motor Data Booklet 1580.505
- Planning Information 0118.55

22 EPR = ethylene propylene rubber

Data to be indicated in the purchase order

- Pump designation
- Flow rate Q, head H_{total}
- Type of fluid handled and fluid temperature
- Voltage, frequency, starting method, cable length
- Quantity and language of operating manuals
- Required accessories
  - For discharge tubes indicate all required elevations and the type of installation.
  - For flow-straightening vanes indicate the type of installation and design (with or without suction umbrella).
  - For a support rope indicate dimension "L", the number of additional lifting rings (depending on the lifting height of the lifting equipment) as well as the elevations and type of installation.

Always define dimension "L" when ordering a support rope to allow the correct length to be determined. The lifting height of the crane must be taken into account when ordering a support rope. This determines the number of lifting rings required for installing the pump in or removing it from the discharge tube.

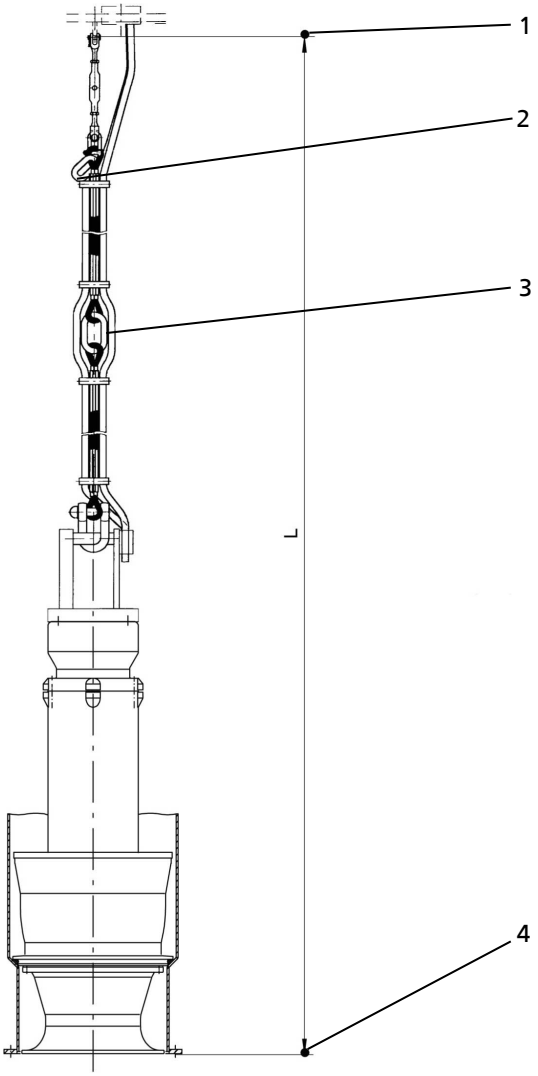

1	Suspension arrangement attached to cover (or cross beam for BU/BG)
2	Lifting ring (standard, included in the scope of supply)
3	Optional (intermediate) lifting ring(s)
4	Lower edge of discharge tube = lower edge of pump

The support rope is an accessory and can be supplied with additional lifting rings and a support spacer (⇨ Page 48) as an option. The standard design is supplied without intermediate lifting ring(s).

1580.5/13-EN

Selection chart

Amacan P, n = 415 / 485 / 580 / 725 / 960 / 1450 rpm

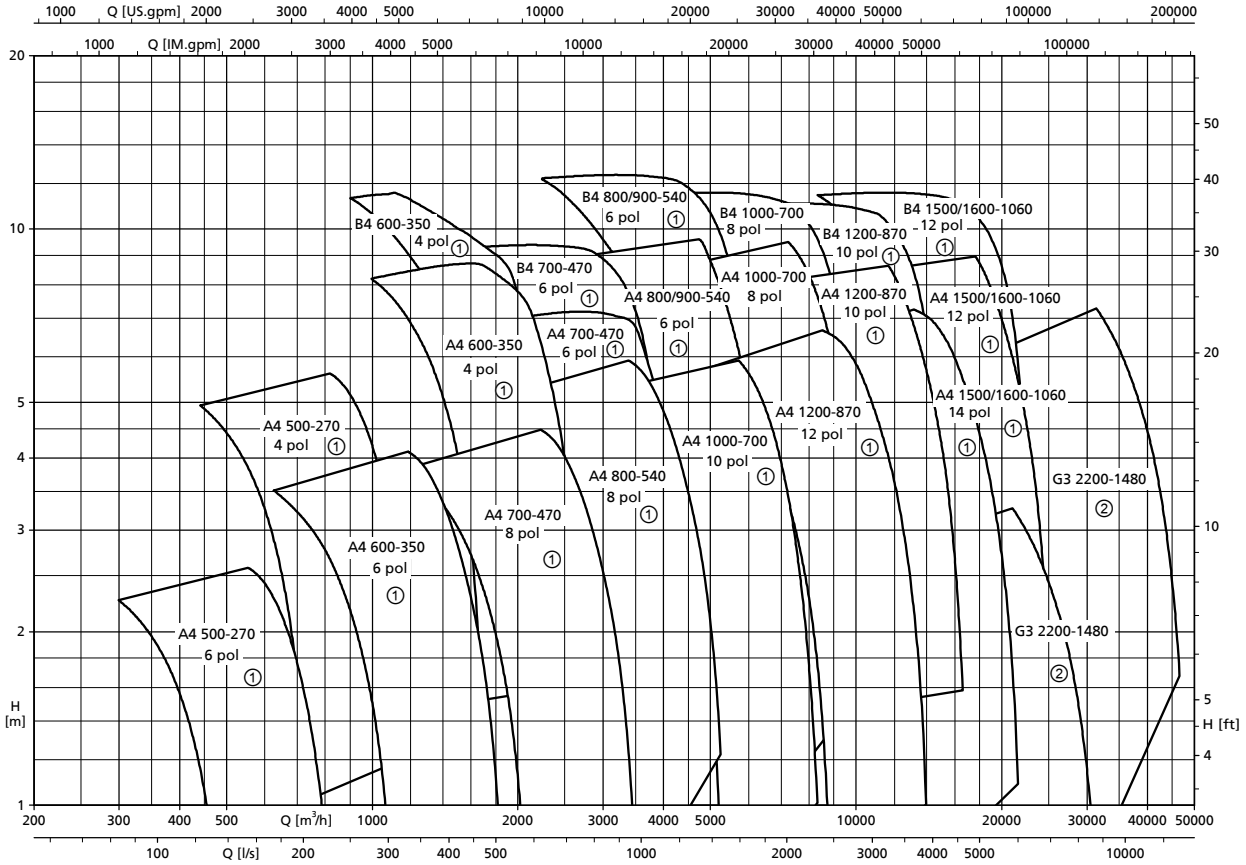

① Standard range

② Special range on request

1580.5/13-EN

Characteristic curves

n = 1450 rpm

Amacan PA4 500-270, n = 1450 rpm

Characteristic curves in acc. with ISO 9906 / 2 / 2B. n = speed

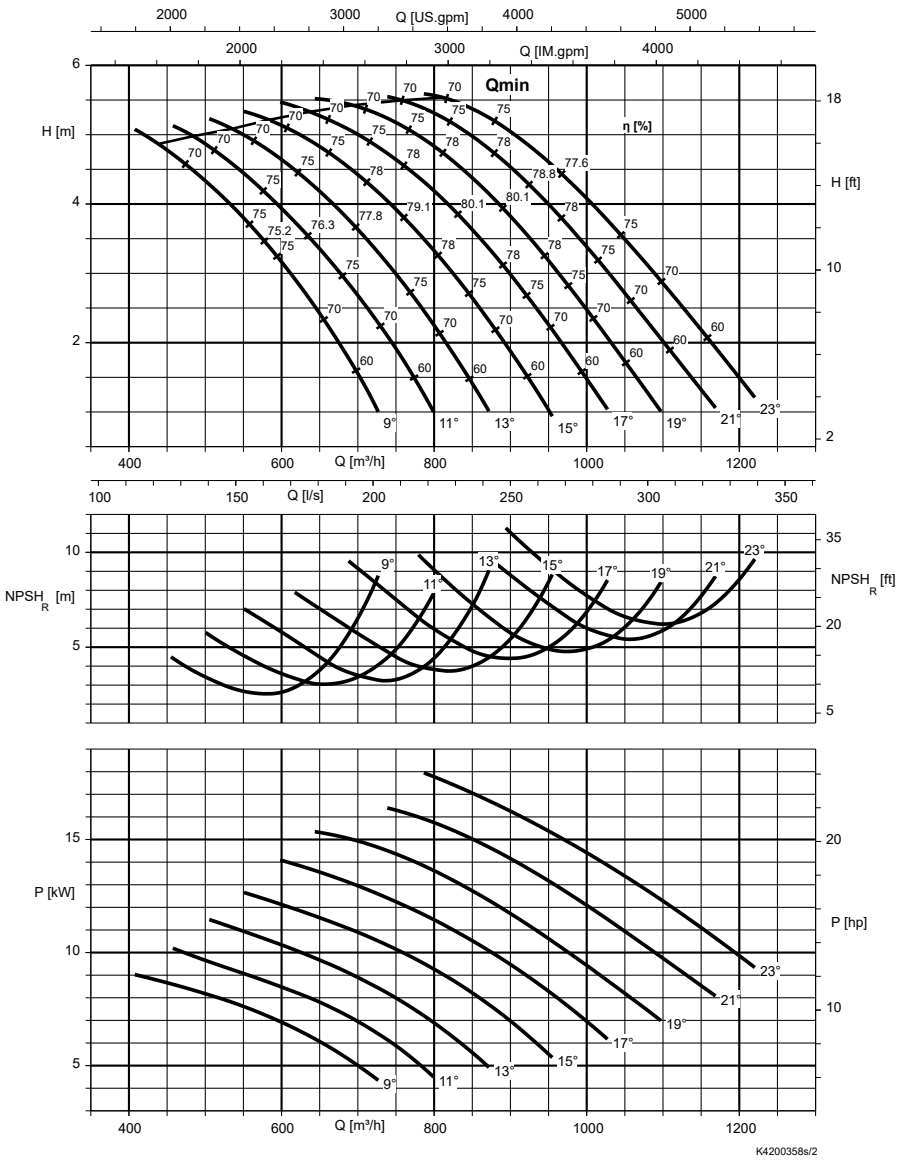

Table 11: Free passage

Angle [°]	Free passage [mm]	Angle [°]	Free passage [mm]
23	70	15	50
21	65	13	45
19	60	11	40
17	55	9	35

Table 12: Rated power P_2 and mass moment of inertia J[23)]

Size	Rated power P_2 [kW]		Mass moment of inertia J
	UAG	XAG	[kgm²]
PA4 500-270 / 10 4	10	10	0,16
PA4 500-270 / 16 4	16	13	0,16
PA4 500-270 / 20 4	25	25	0,19

1580.5/13-EN

23 These values are valid for a density = 1 kg/dm³ and a kinematic viscosity of up to 20 mm²/s.

Amacan PA4 600-350, n = 1450 rpm

Characteristic curves in acc. with ISO 9906 / 2 / 2B. n = speed

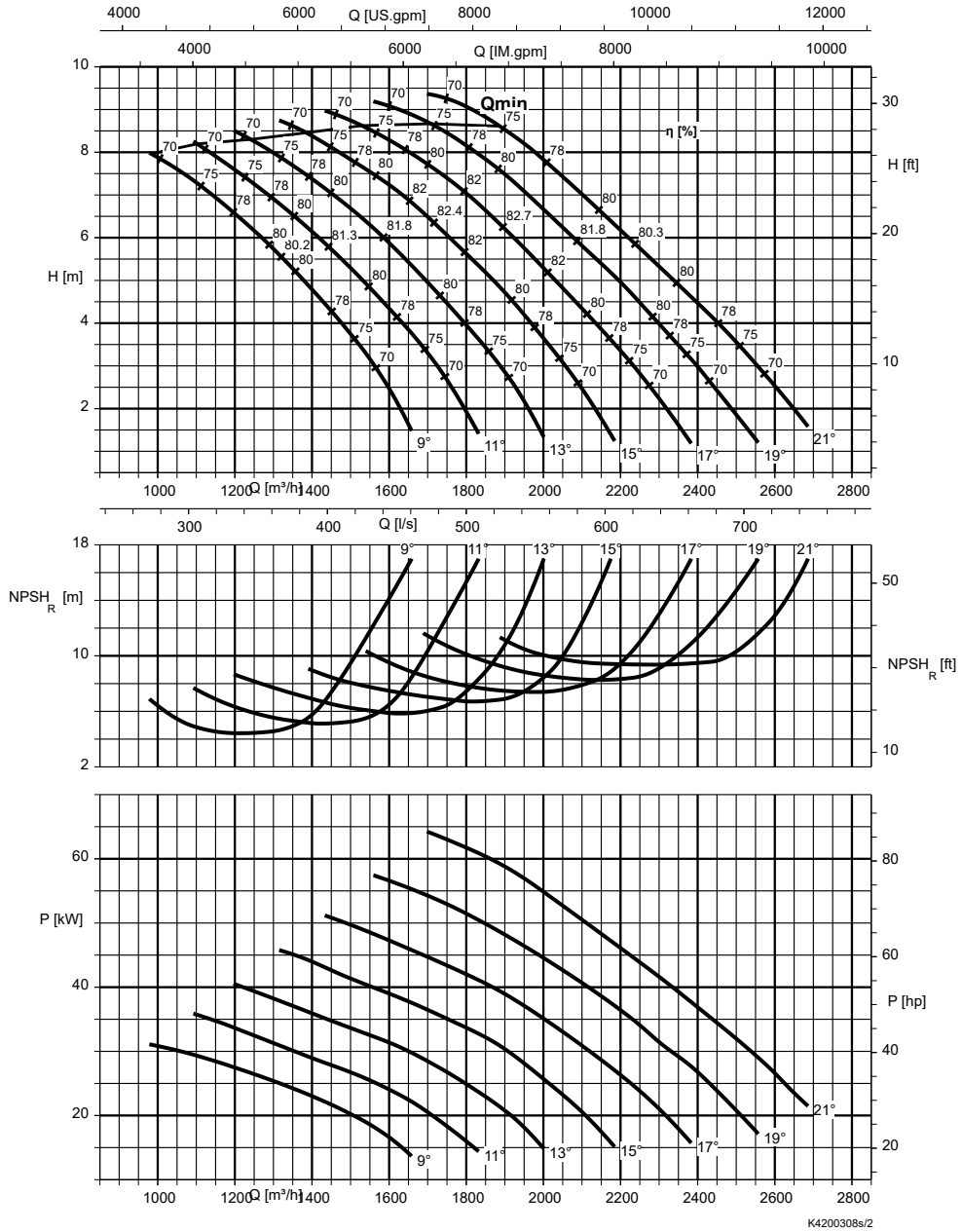

Table 13: Free passage

Angle [°]	Free passage [mm]	Angle [°]	Free passage [mm]
21	80	13	60
19	75	11	55
17	70	9	50
15	65		

Table 14: Rated power P_2 and mass moment of inertia J[24)]

Size	Rated power P_2 [kW]		Mass moment of inertia J
	UAG	XAG	[kgm²]
PA4 600-350 / 20 4	25	25	0,40
PA4 600-350 / 32 4	32	32	0,44
PA4 600-350 / 40 4	40	40	0,44
PA4 600-350 / 60 4	50	50	0,50
PA4 600-350 / 70 4	57	57	0,51

24 These values are valid for a density = 1 kg/dm³ and a kinematic viscosity of up to 20 mm²/s.

Amacan PB4 600-350, n = 1450 rpm

Characteristic curves in acc. with ISO 9906 / 2 / 2B. n = speed

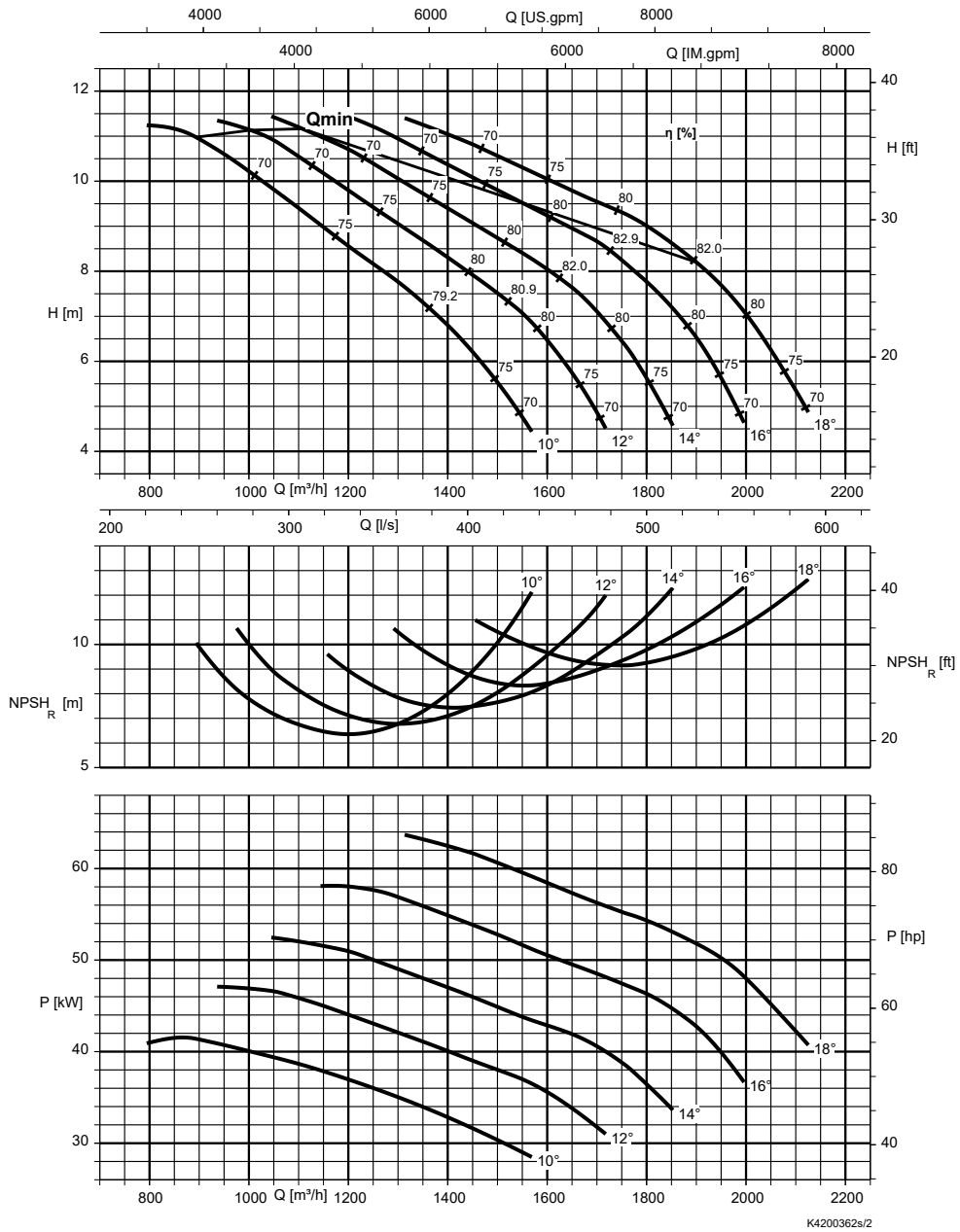

Table 15: Free passage

Angle [°]	Free passage [mm]	Angle [°]	Free passage [mm]
18	75	12	60
16	70	10	55
14	65		

Table 16: Rated power P_2 and mass moment of inertia J[25)]

Size	Rated power P_2 [kW]		Mass moment of inertia J
	UAG	XAG	[kgm²]
PB4 600-350 / 32 4	32	32	0,44
PB4 600-350 / 40 4	40	40	0,44
PB4 600-350 / 60 4	50	50	0,50
PB4 600-350 / 70 4	57	57	0,51

1580.5/13-EN

25 These values are valid for a density = 1 kg/dm³ and a kinematic viscosity of up to 20 mm²/s.

n = 960 rpm

Amacan PA4 500-270, n = 960 rpm

Characteristic curves in acc. with ISO 9906 / 2 / 2B. n = speed

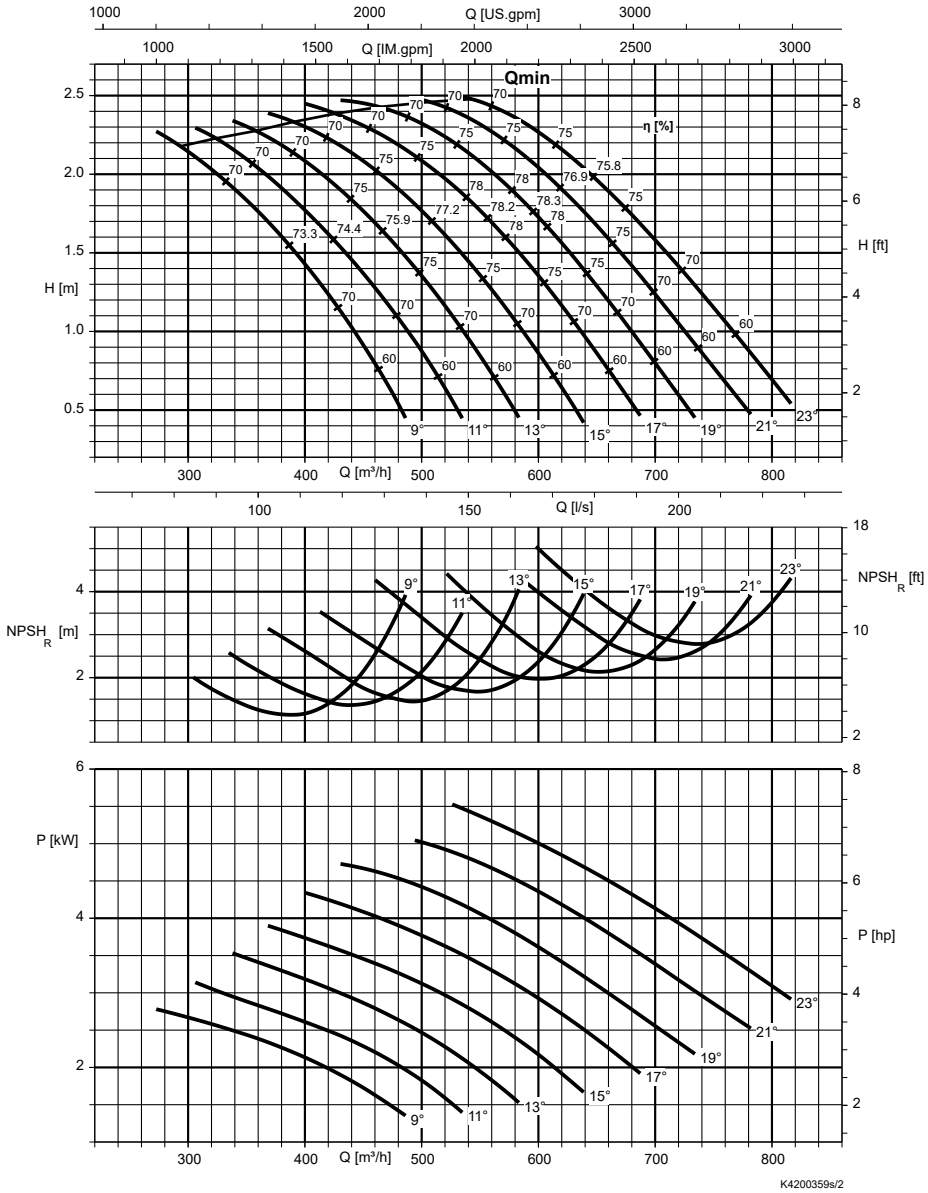

Table 17: Free passage

Angle [°]	Free passage [mm]	Angle [°]	Free passage [mm]
23	70	15	50
21	65	13	45
19	60	11	40
17	55	9	35

Table 18: Rated power P_2 and mass moment of inertia J[26)]

Size	Rated power P_2 [kW]		Mass moment of inertia J
	UAG	XAG	[kgm²]
PA4 500-270 / 6 6	7,5	7,5	0,17

26 These values are valid for a density = 1 kg/dm³ and a kinematic viscosity of up to 20 mm²/s.

Amacan PA4 600-350, n = 960 rpm

Characteristic curves in acc. with ISO 9906 / 2 / 2B. n = speed

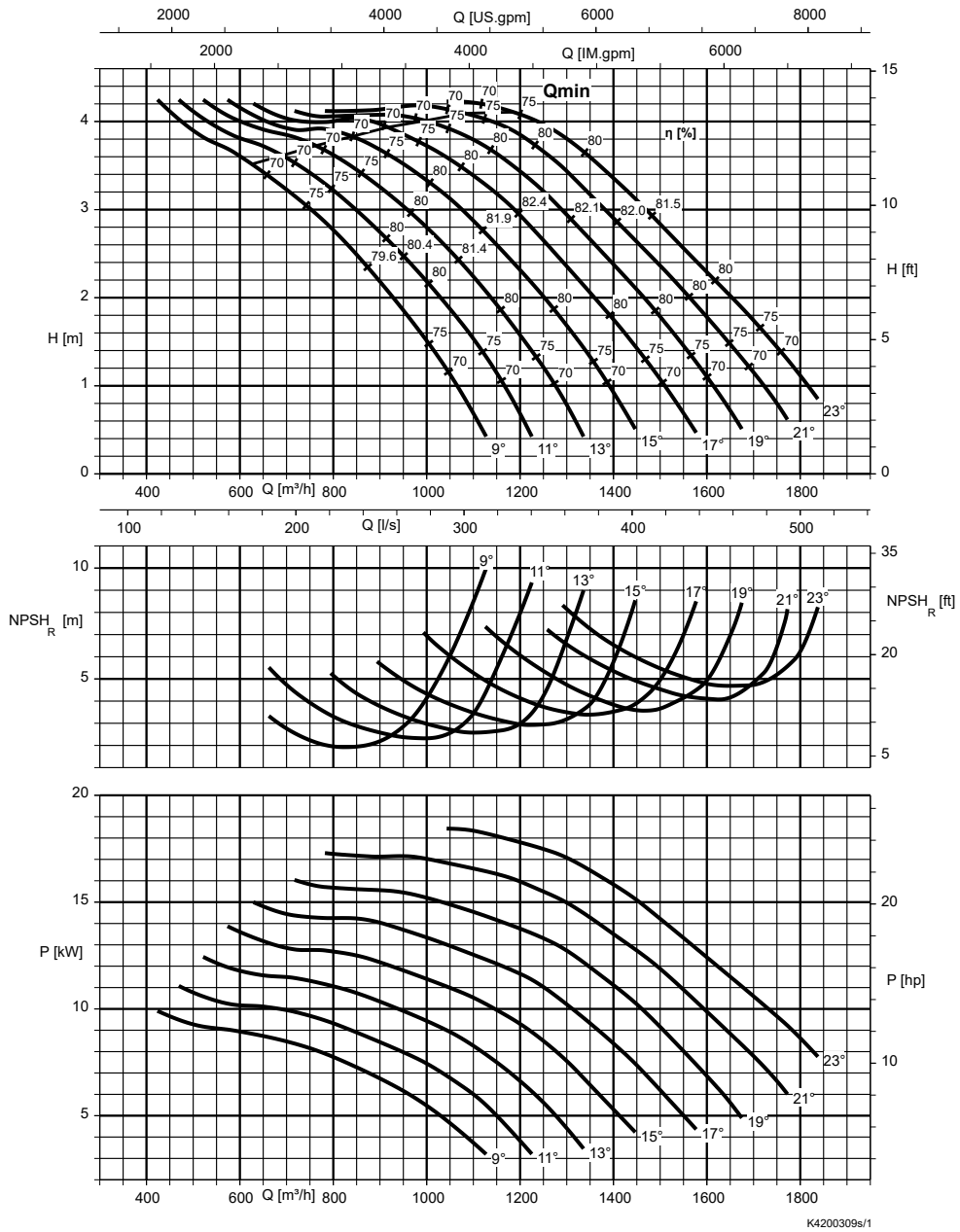

Table 19: Free passage

Angle [°]	Free passage [mm]	Angle [°]	Free passage [mm]
23	85	15	65
21	80	13	60
19	75	11	55
17	70	9	50

Table 20: Rated power P_2 and mass moment of inertia J[27)]

Size	Rated power P_2 [kW]		Mass moment of inertia J
	UAG	XAG	[kgm²]
PA4 600-350 / 10 6	12	12	0,38
PA4 600-350 / 16 6	18	18	0,41
PA4 600-350 / 25 6	28	28	0,47

1580.5/13-EN

27 These values are valid for a density = 1 kg/dm³ and a kinematic viscosity of up to 20 mm²/s.

Amacan PA4 700-470, n = 960 rpm

Characteristic curves in acc. with ISO 9906 / 2 / 2B. n = speed

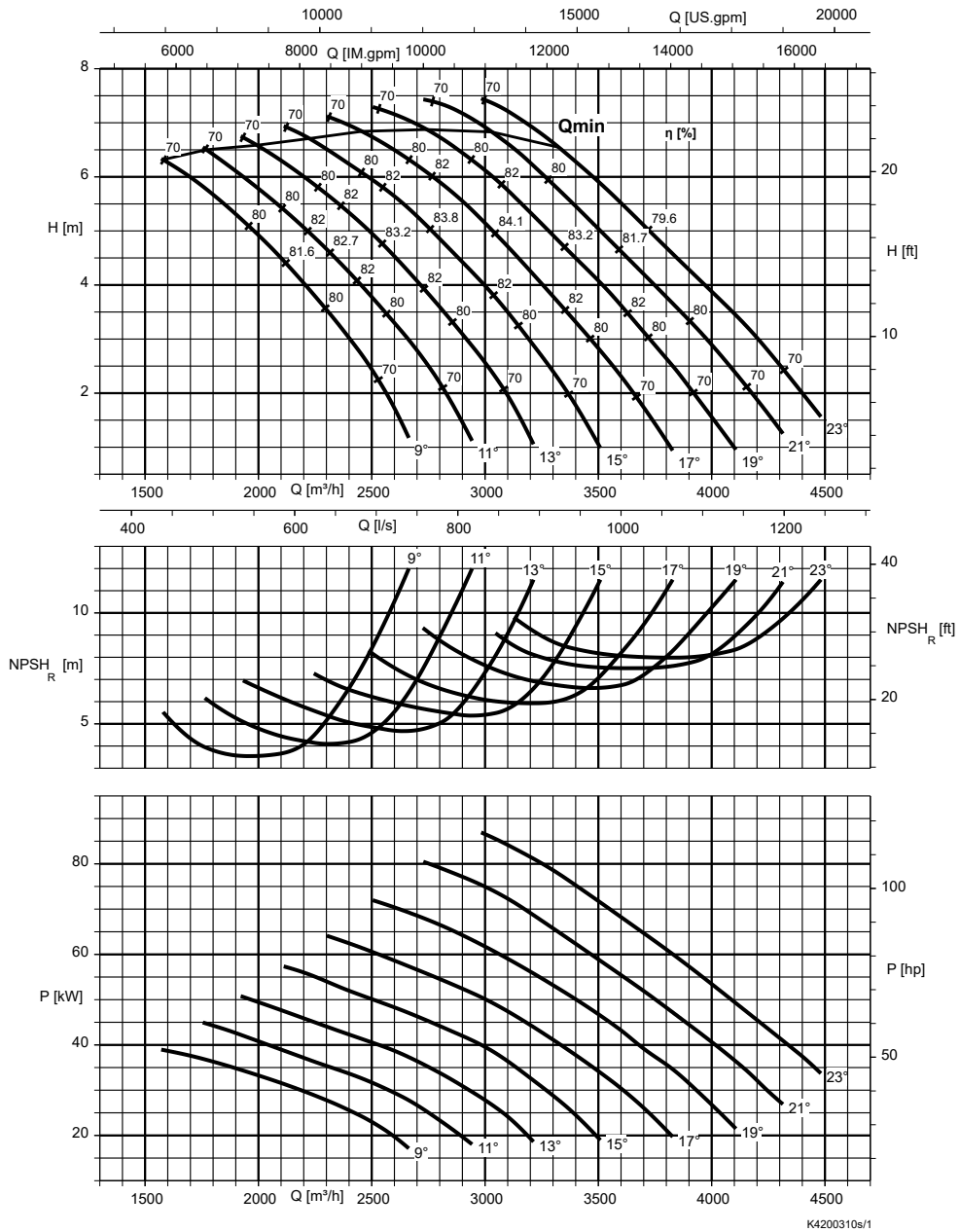

Table 21: Free passage

Angle [°]	Free passage [mm]	Angle [°]	Free passage [mm]
23	120	15	85
21	110	13	75
19	100	11	68
17	93	9	60

Table 22: Rated power P_2 and mass moment of inertia J[28)]

Size	Rated power P_2 [kW]		Mass moment of inertia J
	UTG	XTG	[kgm²]
PA4 700-470 / 47 6	47	47	1,73
PA4 700-470 / 60 6	60	60	1,82
PA4 700-470 / 80 6	80	80	1,95
PA4 700-470 / 100 6	100	100	2,08

28 These values are valid for a density = 1 kg/dm³ and a kinematic viscosity of up to 20 mm²/s.

Amacan PA4 800-540, n = 960 rpm

Characteristic curves in acc. with ISO 9906 / 2 / 2B. n = speed

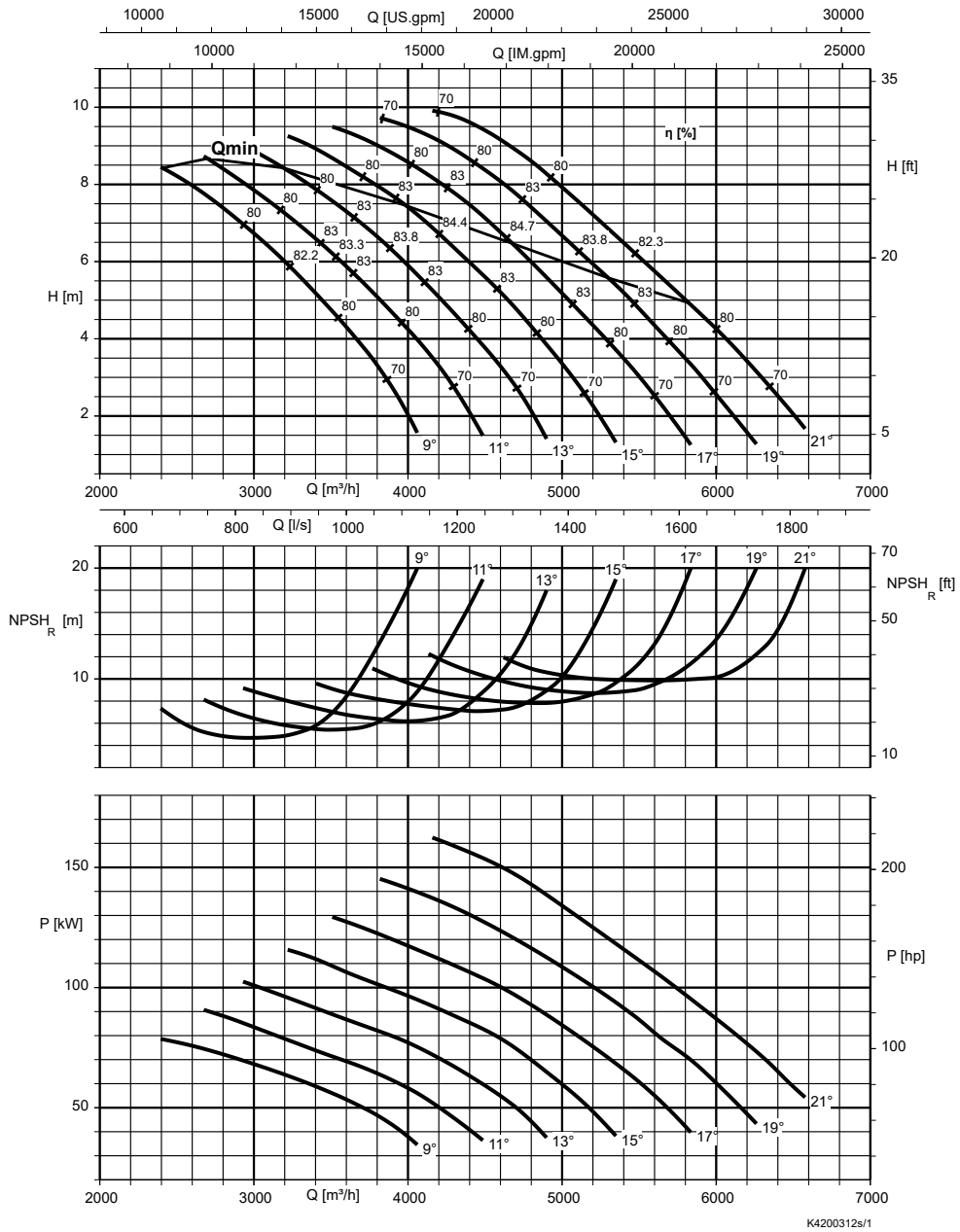

Table 23: Free passage

Angle [°]	Free passage [mm]	Angle [°]	Free passage [mm]
21	125	13	90
19	115	11	80
17	108	9	75
15	100		

Table 24: Rated power P_2 and mass moment of inertia J[29)]

Size	Rated power P_2 [kW]		Mass moment of inertia J
	UTG	XTG	[kgm²]
PA4 800-540 / 80 6	80	80	3,25
PA4 800-540 / 100 6	100	100	3,38
PA4 800-540 / 120 6	115	115	3,52

1580.5/13-EN

29 These values are valid for a density = 1 kg/dm³ and a kinematic viscosity of up to 20 mm²/s.

Amacan PA4 900-540, n = 960 rpm

Characteristic curves in acc. with ISO 9906 / 2 / 2B. n = speed

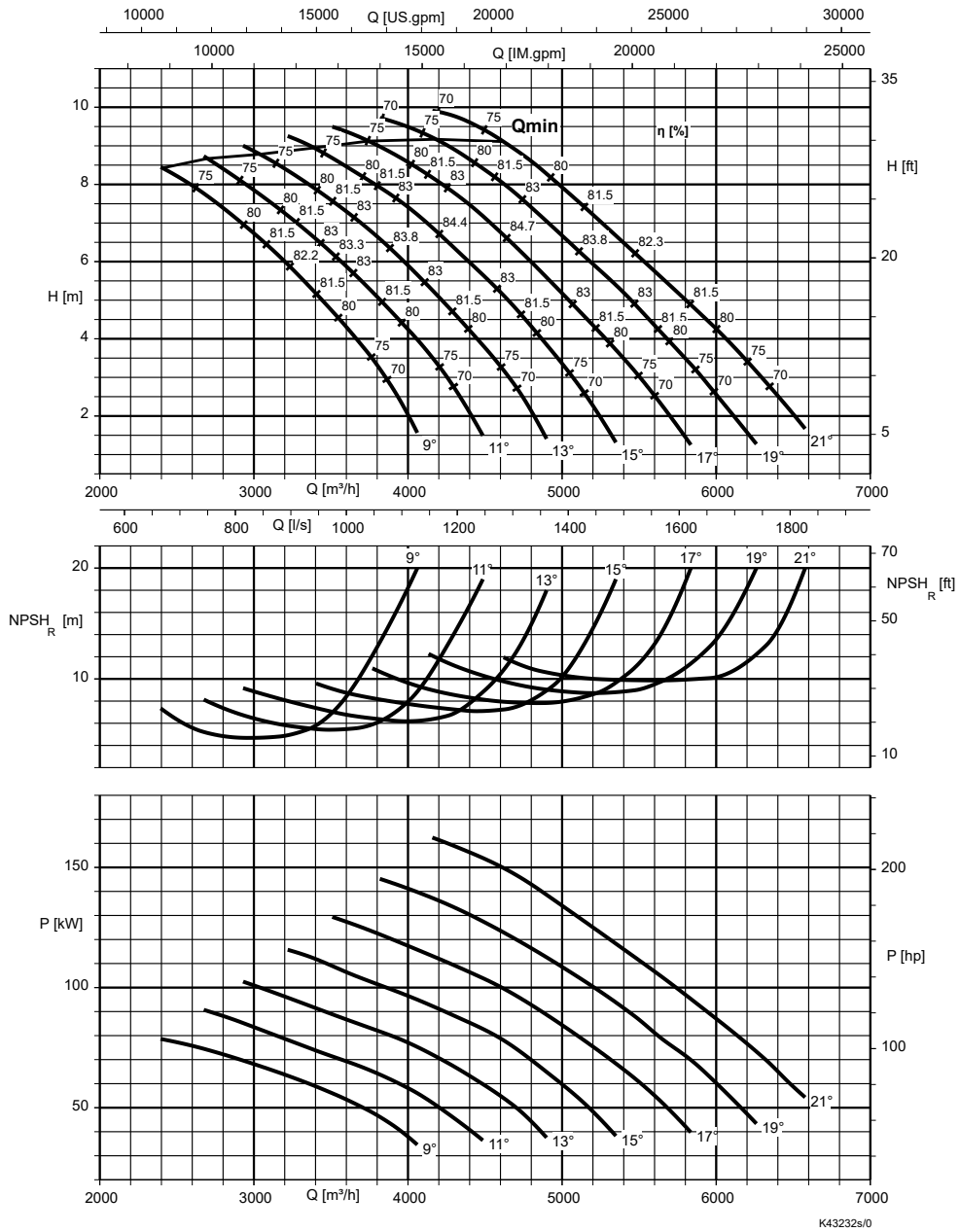

Table 25: Free passage

Angle [°]	Free passage [mm]	Angle [°]	Free passage [mm]
21	125	13	90
19	115	11	80
17	108	9	75
15	100		

Table 26: Rated power P_2 and mass moment of inertia J[30)]

Size	Rated power P_2 [kW]		Mass moment of inertia J
	UTG	XTG	[kgm²]
PA4 900-540 / 155 6	155	155	4,53
PA4 900-540 / 180 6	180	180	4,80

30 These values are valid for a density = 1 kg/dm³ and a kinematic viscosity of up to 20 mm²/s.

Amacan PB4 700-470, n = 960 rpm

Characteristic curves in acc. with ISO 9906 / 2 / 2B. n = speed

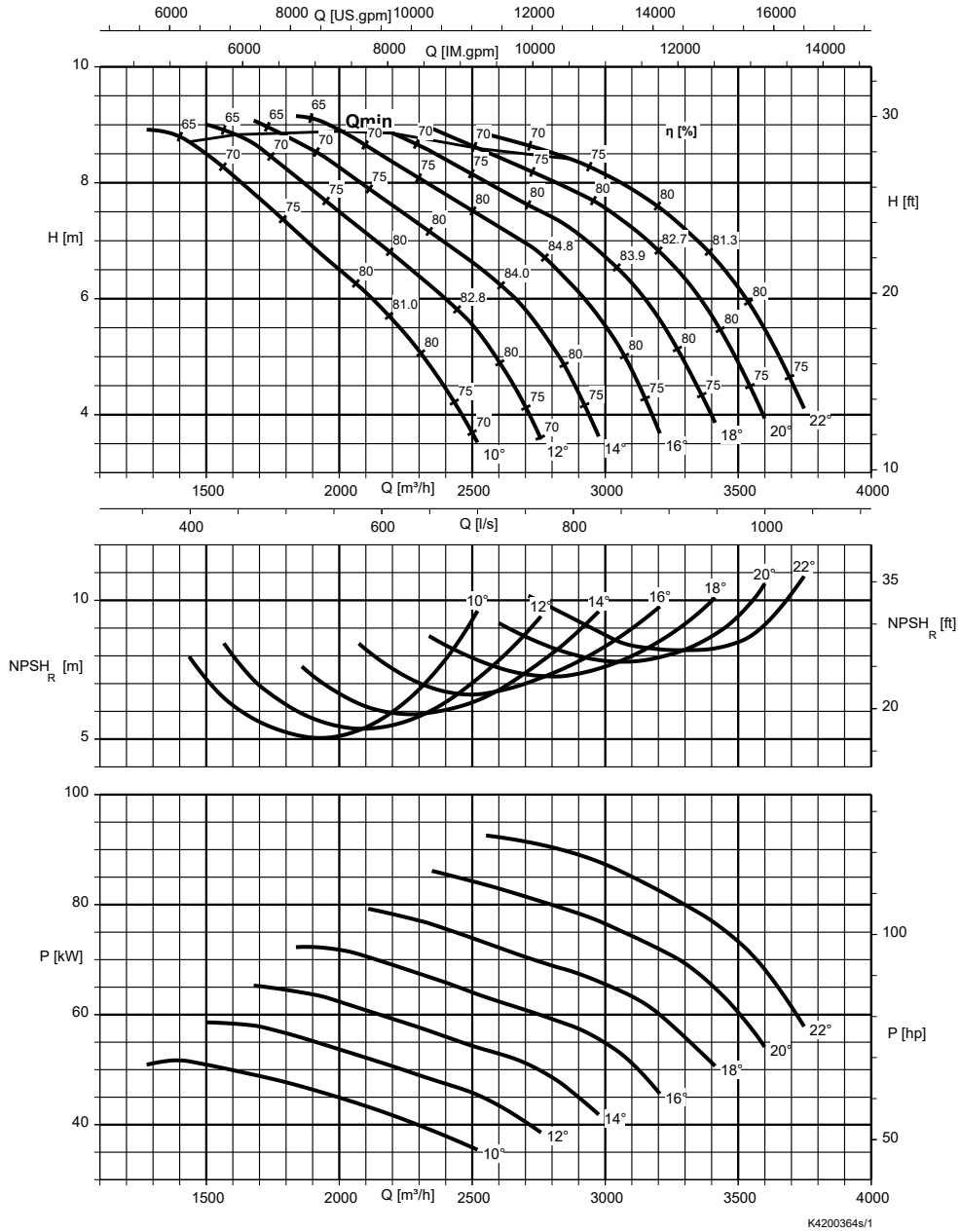

Table 27: Free passage

Angle [°]	Free passage [mm]	Angle [°]	Free passage [mm]
22	115	14	87
20	108	12	80
18	100	10	73
16	94		

Table 28: Rated power P_2 and mass moment of inertia J[31)]

Size	Rated power P_2 [kW]		Mass moment of inertia J
	UTG	XTG	[kgm²]
PB4 700-470 / 60 6	60	60	1,82
PB4 700-470 / 80 6	80	80	1,95
PB4 700-470 / 100 6	100	100	2,08
PB4 700-470 / 120 6	115	115	2,22

31 These values are valid for a density = 1 kg/dm³ and a kinematic viscosity of up to 20 mm²/s.

Amacan PB4 800-540, n = 960 rpm

Characteristic curves in acc. with ISO 9906 / 2 / 2B. n = speed

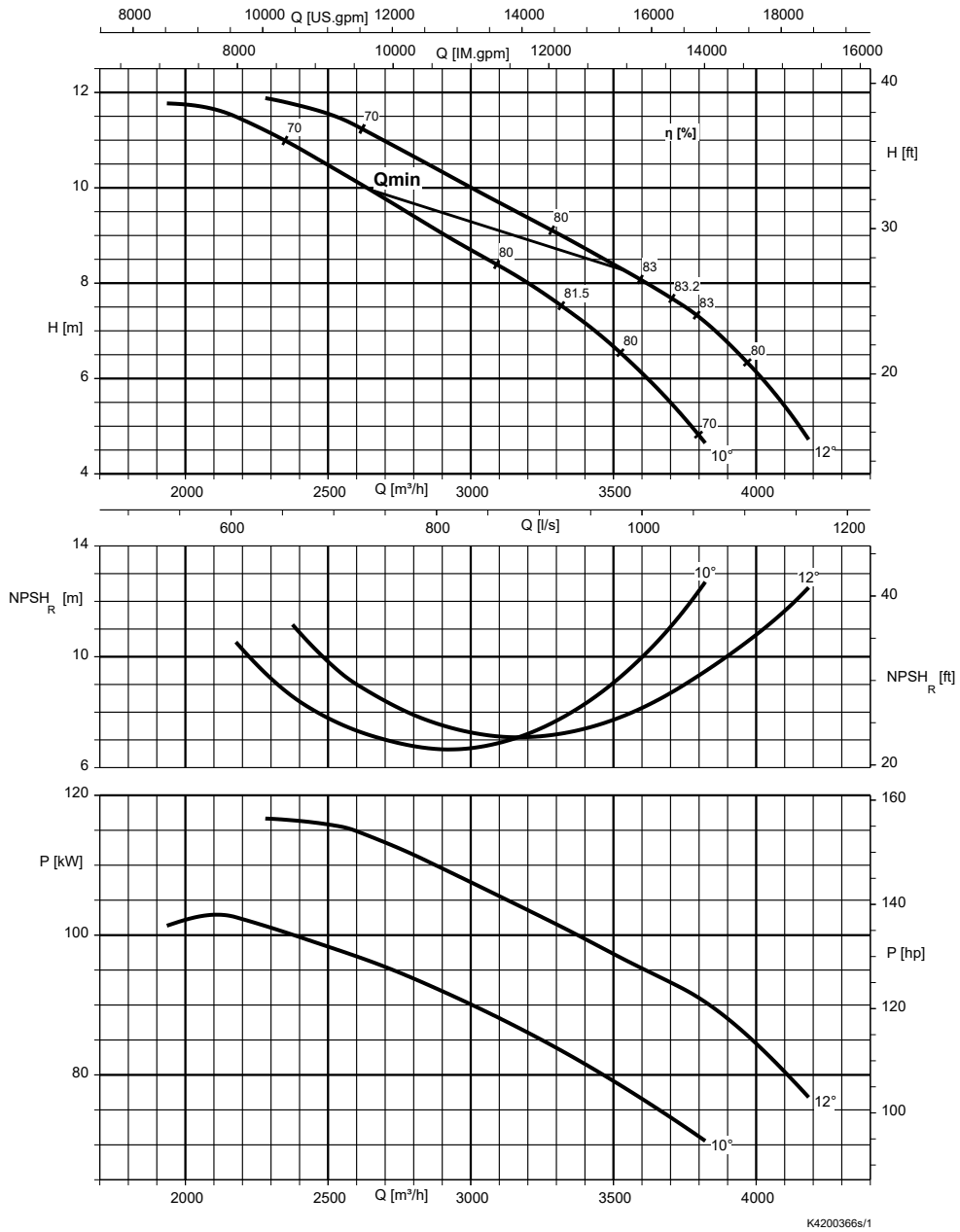

Table 29: Free passage

Angle [°]	Free passage [mm]	Angle [°]	Free passage [mm]
12	92	10	85

Table 30: Rated power P_2 and mass moment of inertia J[32)]

Size	Rated power P_2 [kW]		Mass moment of inertia J
	UTG	XTG	[kgm²]
PB4 800-540 / 120 6	115	115	3,52

32 These values are valid for a density = 1 kg/dm³ and a kinematic viscosity of up to 20 mm²/s.

Amacan PB4 900-540, n = 960 rpm

Characteristic curves in acc. with ISO 9906 / 2 / 2B. n = speed

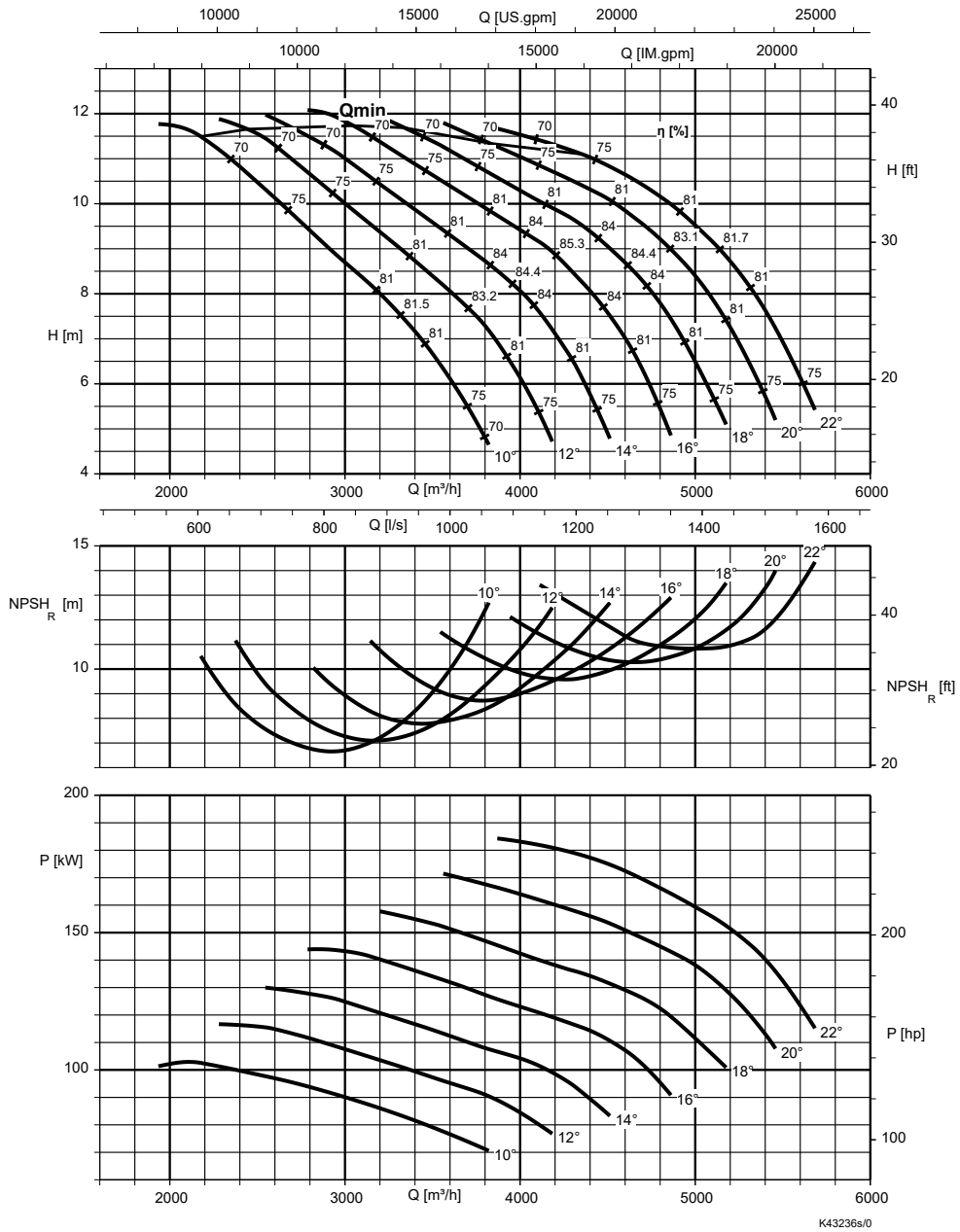

Table 31: Free passage

Angle [°]	Free passage [mm]	Angle [°]	Free passage [mm]
22	130	14	100
20	123	12	92
18	115	10	85
16	108		

Table 32: Rated power P_2 and mass moment of inertia J[33)]

Size	Rated power P_2 [kW]		Mass moment of inertia J
	UTG	XTG	[kgm²]
PB4 900-540 / 155 6	155	155	4,53
PB4 900-540 / 180 6	180	180	4,80
PB4 900-540 / 205 6	205	205	5,10

1580.5/13-EN

33 These values are valid for a density = 1 kg/dm³ and a kinematic viscosity of up to 20 mm²/s.

n = 725 rpm

Amacan PA4 700-470, n = 725 rpm

Characteristic curves in acc. with ISO 9906 / 2 / 2B. n = speed

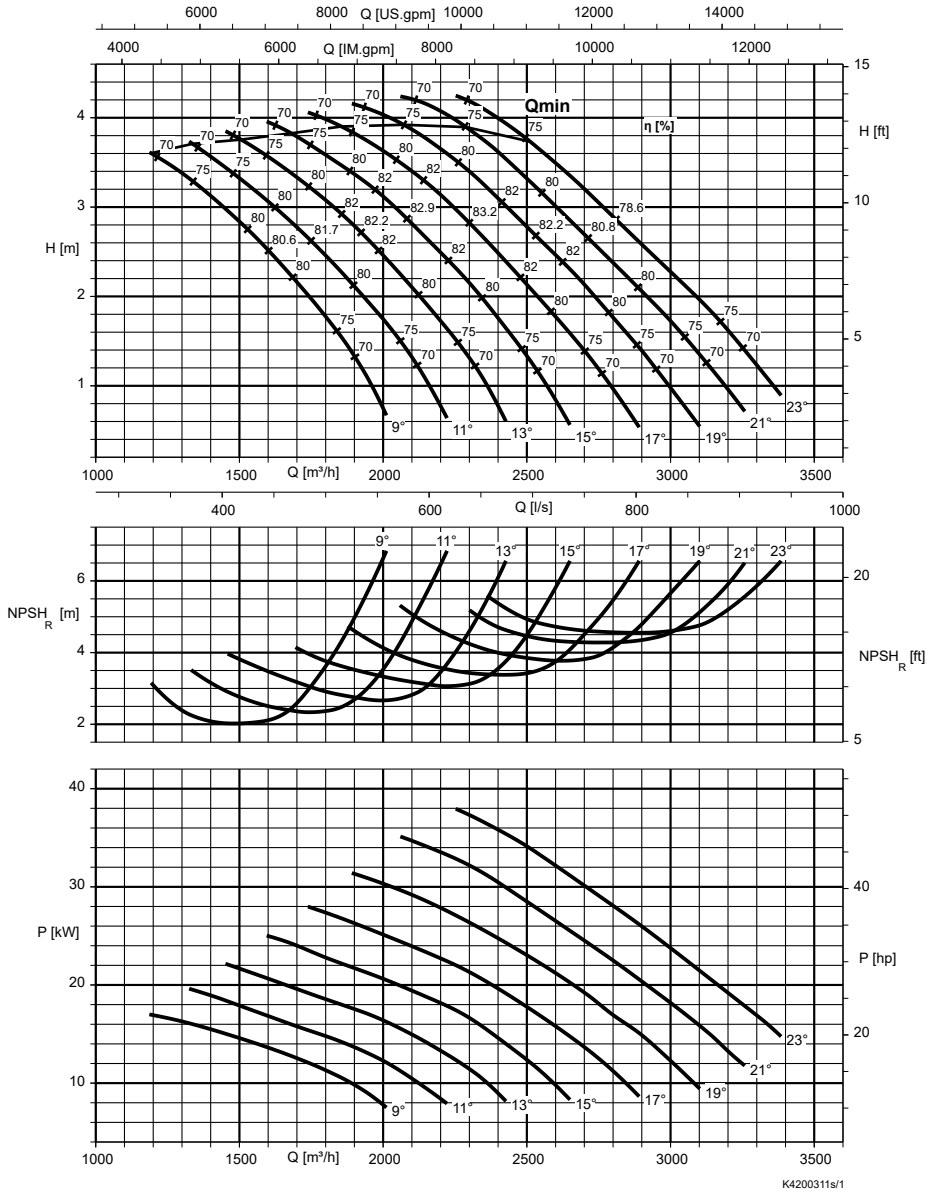

Table 33: Free passage

Angle [°]	Free passage [mm]	Angle [°]	Free passage [mm]
23	120	15	85
21	110	13	75
19	100	11	68
17	93	9	60

Table 34: Rated power P_2 and mass moment of inertia J[34)]

Size	Rated power P_2 [kW]		Mass moment of inertia J
	UTG	XTG	[kgm²]
PA4 700-470 / 30 8	30	30	1,78
PA4 700-470 / 40 8	40	40	1,78

34 These values are valid for a density = 1 kg/dm³ and a kinematic viscosity of up to 20 mm²/s.

Amacan PA4 800-540, n = 725 rpm

Characteristic curves in acc. with ISO 9906 / 2 / 2B. n = speed

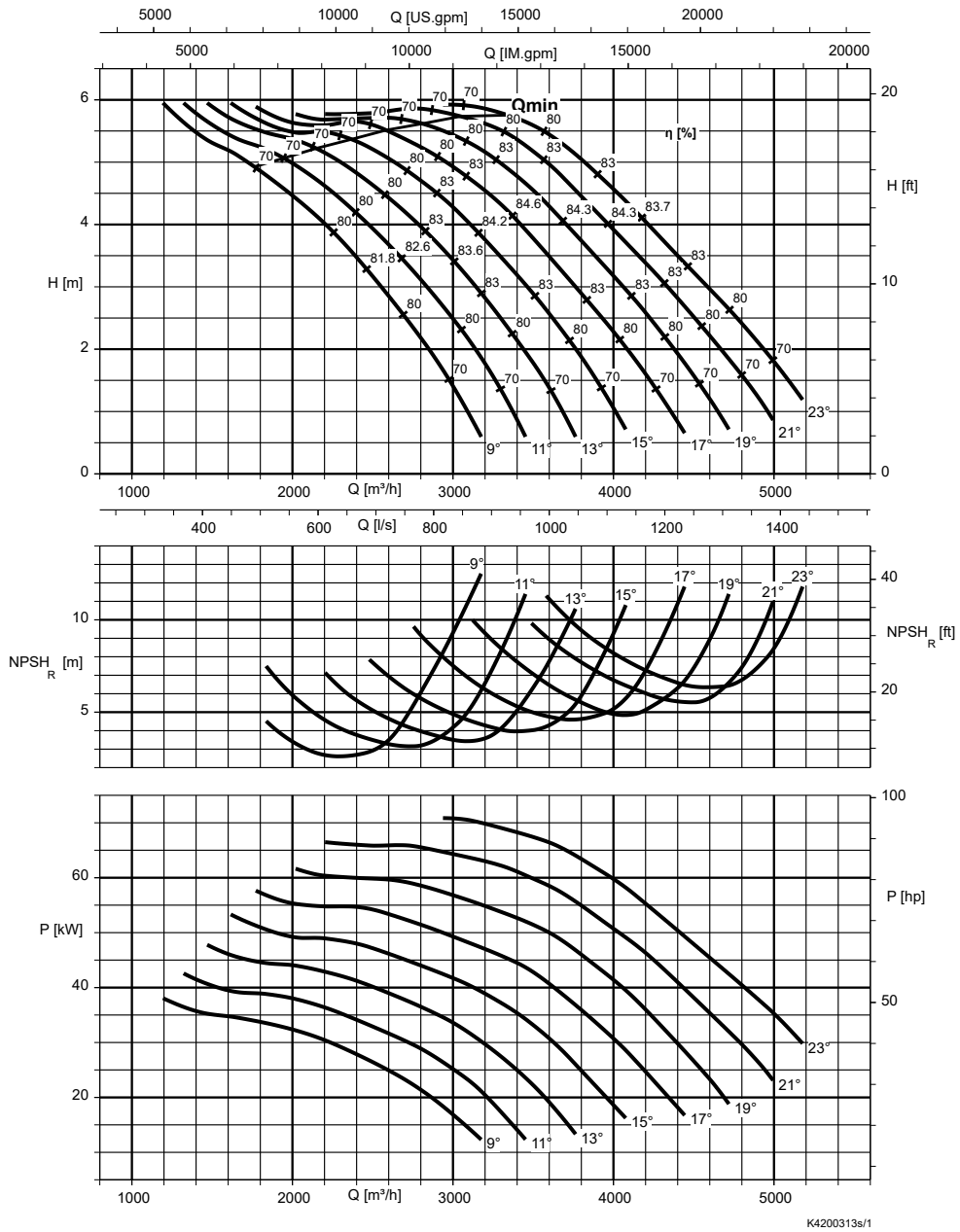

Table 35: Free passage

Angle [°]	Free passage [mm]	Angle [°]	Free passage [mm]
23	135	15	100
21	125	13	90
19	115	11	80
17	108	9	75

Table 36: Rated power P_2 and mass moment of inertia J[35)]

Size	Rated power P_2 [kW]		Mass moment of inertia J
	UTG	XTG	[kgm²]
PA4 800-540 / 40 8	40	40	3,09
PA4 800-540 / 55 8	55	55	3,25
PA4 800-540 / 70 8	70	70	3,25
PA4 800-540 / 100 8	95	95	3,52

1580.5/13-EN

35 These values are valid for a density = 1 kg/dm³ and a kinematic viscosity of up to 20 mm²/s.

Amacan PA4 1000-700, n = 725 rpm

Characteristic curves in acc. with ISO 9906 / 2 / 2B. n = speed

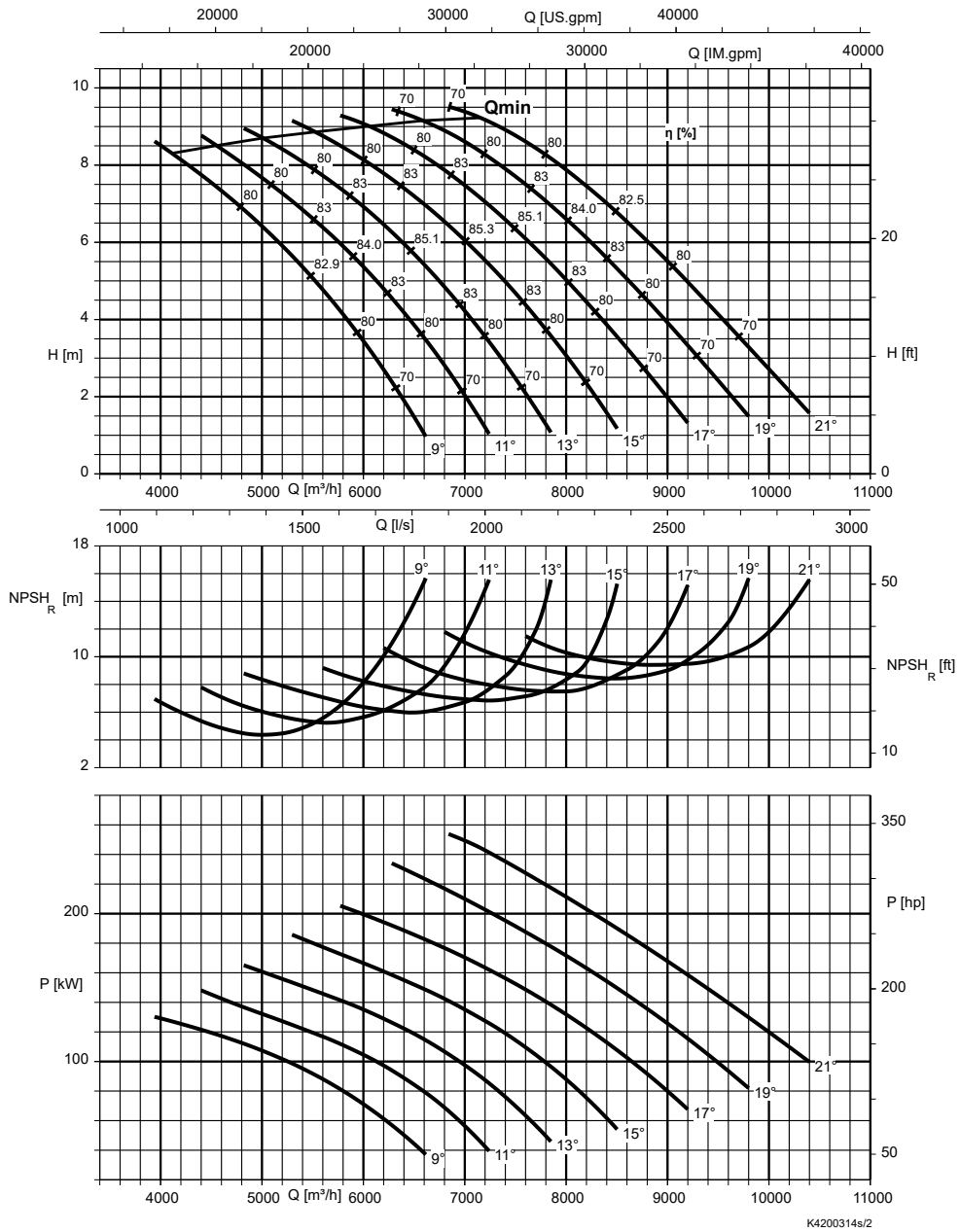

Table 37: Free passage

Angle [°]	Free passage [mm]	Angle [°]	Free passage [mm]
21	160	13	120
19	150	11	110
17	140	9	100
15	130		

Table 38: Rated power P_2 and mass moment of inertia J[36)]

Size	Rated power P_2 [kW]		Mass moment of inertia J
	UTG	XTG	[kgm²]
PA4 1000-700 / 120 8	120	120	11,0
PA4 1000-700 / 160 8	160	160	11,6
PA4 1000-700 / 205 8	205	–	16,3
PA4 1000-700 / 250 8	250	–	17,6
PA4 1000-700 / 290 8	290	–	18,9

36 These values are valid for a density = 1 kg/dm³ and a kinematic viscosity of up to 20 mm²/s.

Amacan PB4 1000-700, n = 725 rpm

Characteristic curves in acc. with ISO 9906 / 2 / 2B. n = speed

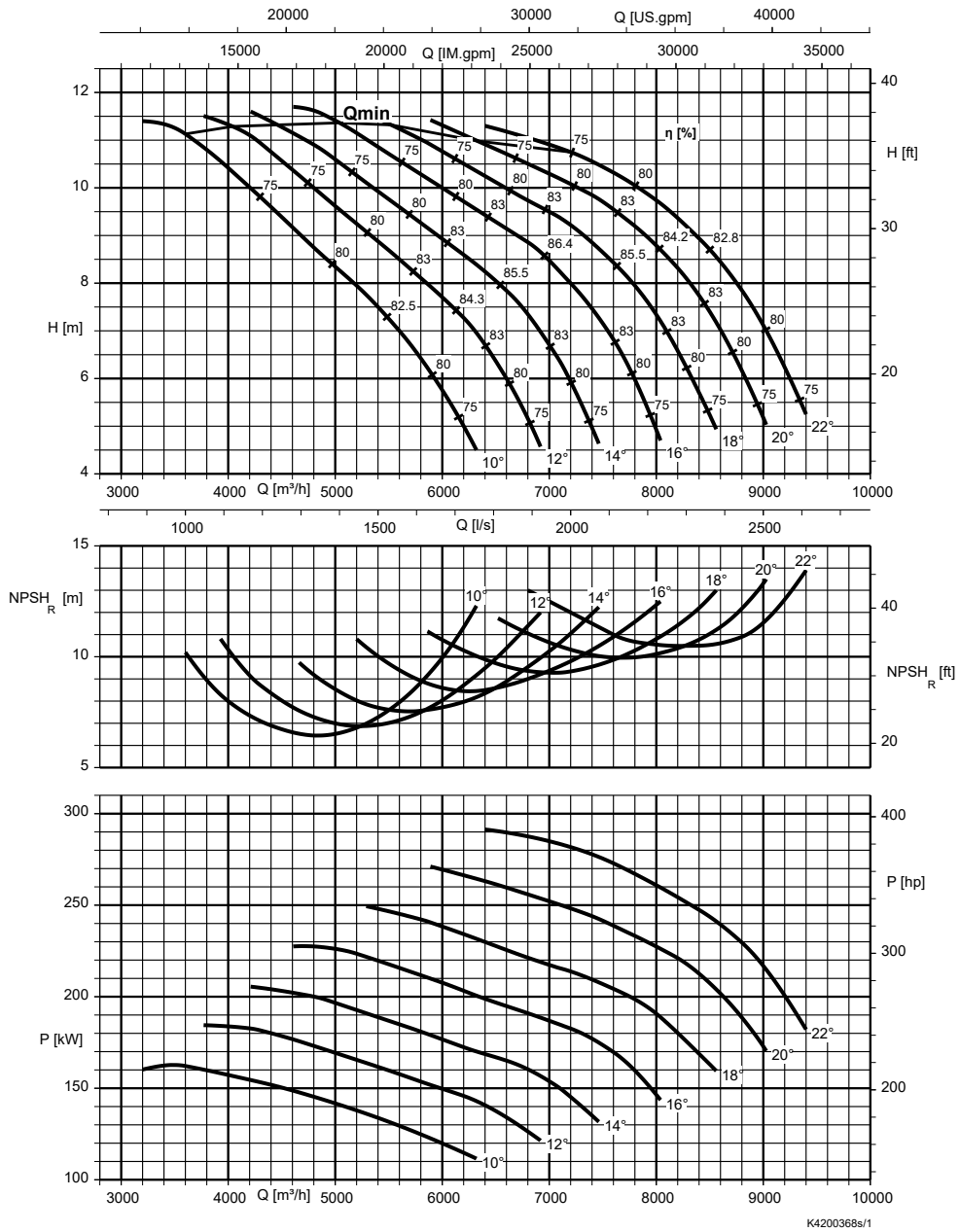

Table 39: Free passage

Angle [°]	Free passage [mm]	Angle [°]	Free passage [mm]
22	170	14	130
20	160	12	120
18	150	10	110
16	140		

Table 40: Rated power P_2 and mass moment of inertia J[37)]

Size	Rated power P_2 [kW]		Mass moment of inertia J
	UTG	XTG	[kgm²]
PB4 1000-700 / 160 8	160	160	11,6
PB4 1000-700 / 205 8	205	–	16,3
PB4 1000-700 / 250 8	250	–	17,6
PB4 1000-700 / 290 8	290	–	18,9

1580.5/13-EN

37 These values are valid for a density = 1 kg/dm³ and a kinematic viscosity of up to 20 mm²/s.

n = 580 rpm

Amacan PA4 1000-700, n = 580 rpm

Characteristic curves in acc. with ISO 9906 / 2 / 2B. n = speed

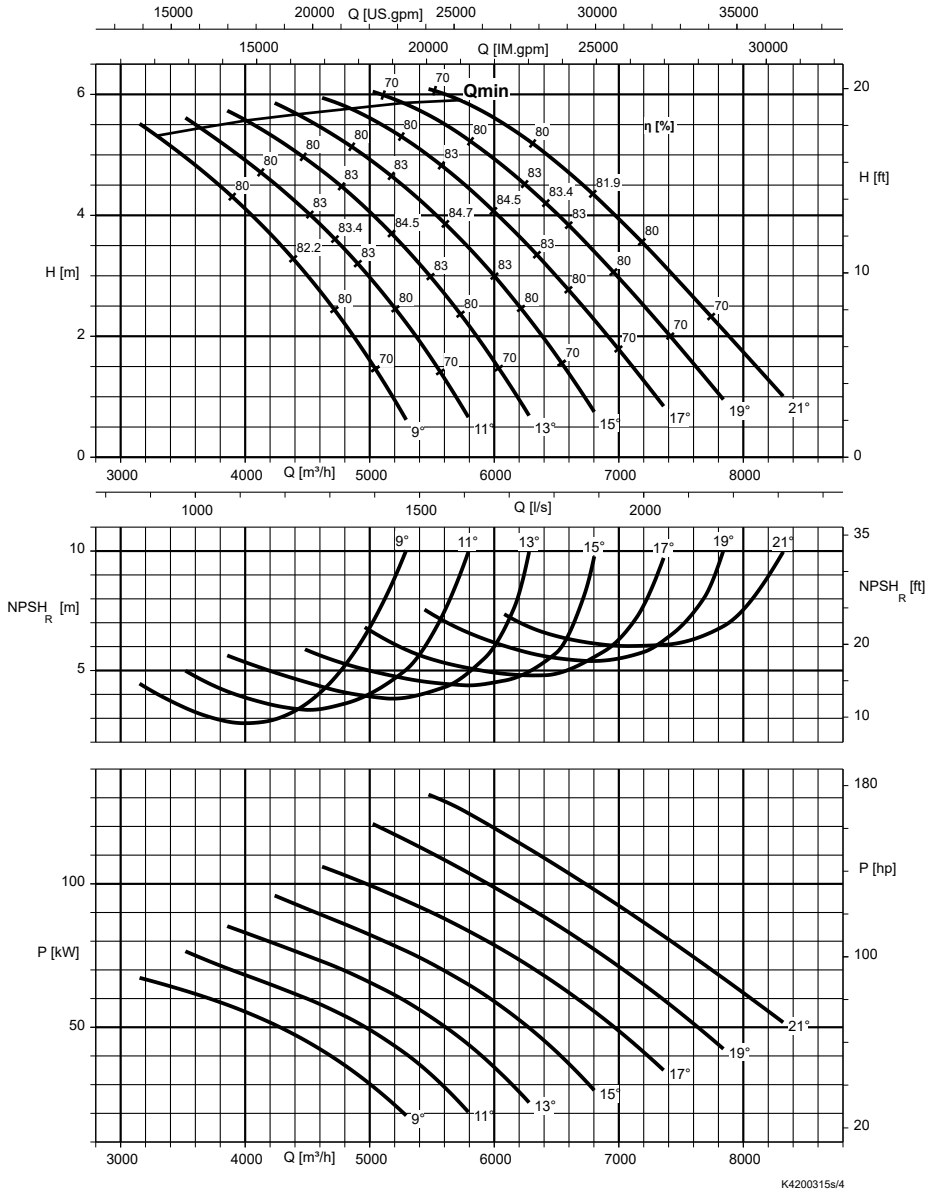

Table 41: Free passage

Angle [°]	Free passage [mm]	Angle [°]	Free passage [mm]
21	160	13	120
19	150	11	110
17	140	9	100
15	130		

Table 42: Rated power P_2 and mass moment of inertia J[38)]

Size	Rated power P_2 [kW]		Mass moment of inertia J
	UTG	XTG	[kgm²]
PA4 1000-700 / 60 10	60	60	10,8
PA4 1000-700 / 90 10	90	90	11,2
PA4 1000-700 / 120 10	120	120	11,5

38 These values are valid for a density = 1 kg/dm³ and a kinematic viscosity of up to 20 mm²/s.

Amacan PA4 1200-870, n = 580 rpm

Characteristic curves in acc. with ISO 9906 / 2 / 2B. n = speed

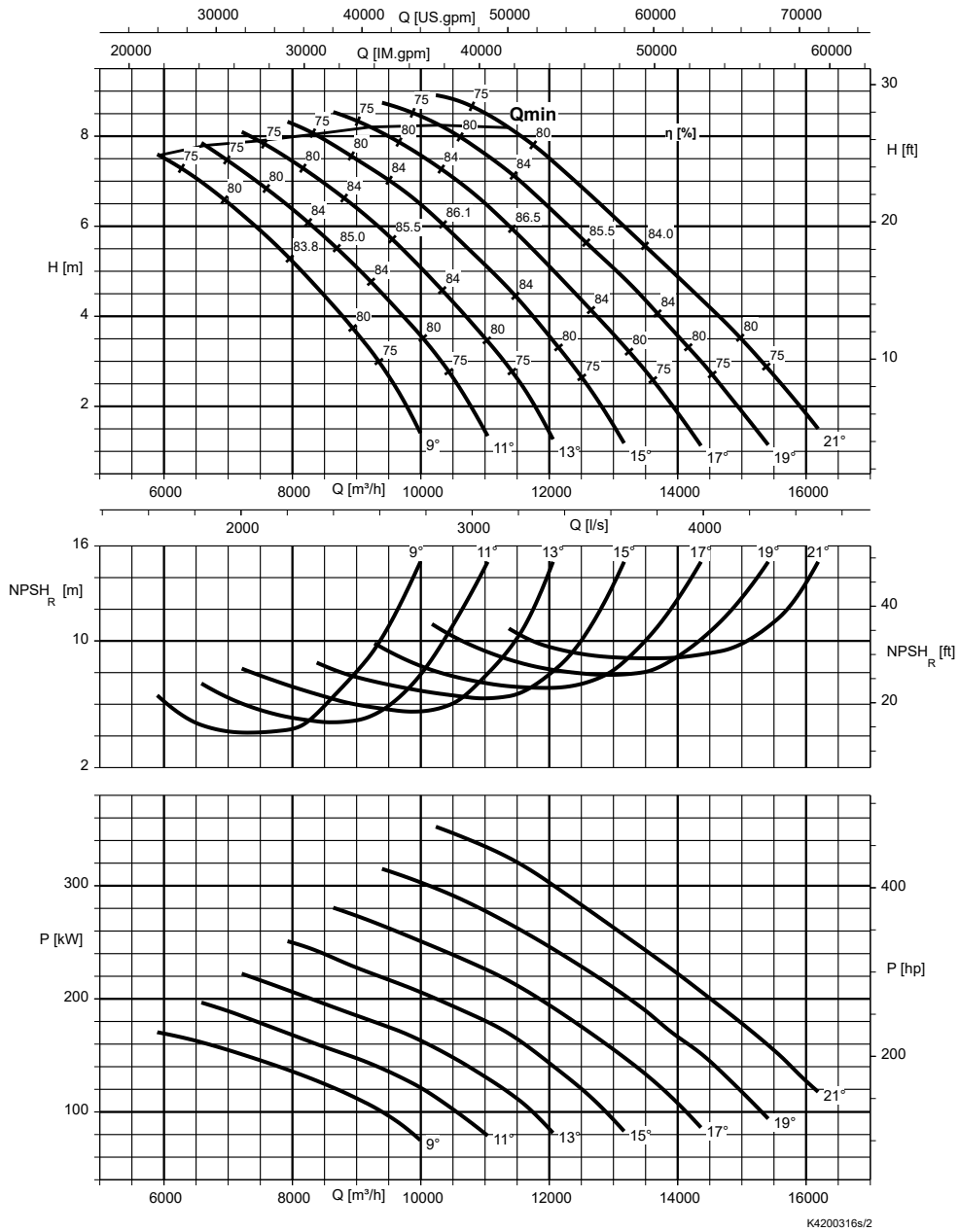

Table 43: Free passage

Angle [°]	Free passage [mm]	Angle [°]	Free passage [mm]
21	200	13	145
19	185	11	135
17	175	9	125
15	160		

Table 44: Rated power P_2 and mass moment of inertia J[39)]

Size	Rated power P_2 [kW]		Mass moment of inertia J
	UTG	XTG	[kgm²]
PA4 1200-870 / 200 10	200	200	36,9
PA4 1200-870 / 250 10	250	250	39,1
PA4 1200-870 / 310 10	310	–	45,0
PA4 1200-870 / 365 10	365	–	47,8
PA4 1200-870 / 420 10	420	–	50,5

1580.5/13-EN

39 These values are valid for a density = 1 kg/dm³ and a kinematic viscosity of up to 20 mm²/s.

Amacan PB4 1200-870, n = 580 rpm

Characteristic curves in acc. with ISO 9906 / 2 / 2B. n = speed

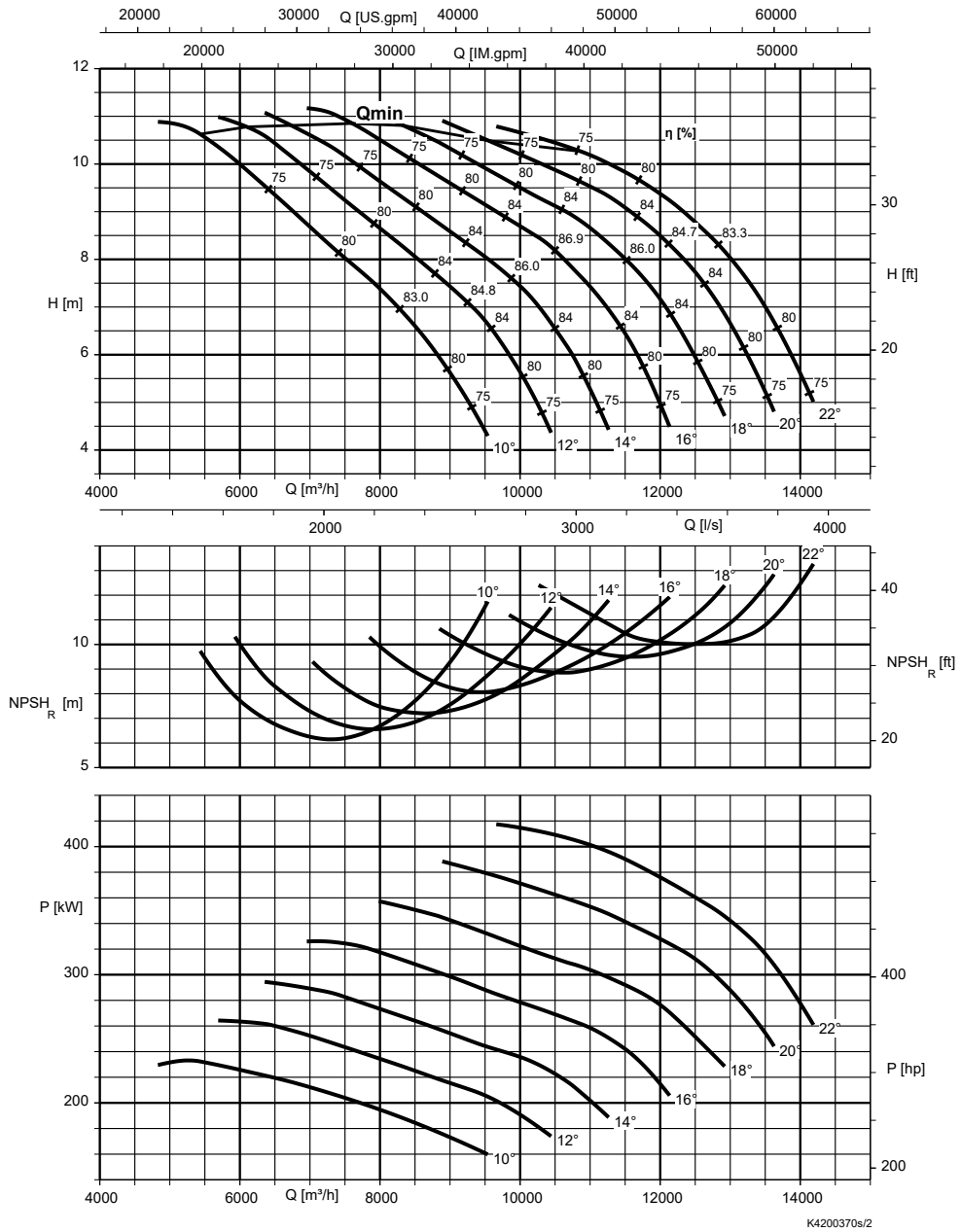

Table 45: Free passage

Angle [°]	Free passage [mm]	Angle [°]	Free passage [mm]
22	210	14	160
20	200	12	145
18	185	10	135
16	175		

Table 46: Rated power P_2 and mass moment of inertia J[40)]

Size	Rated power P_2 [kW]		Mass moment of inertia J
	UTG	XTG	[kgm²]
PB4 1200-870 / 250 10	250	250	39,1
PB4 1200-870 / 310 10	310	–	45,0
PB4 1200-870 / 365 10	365	–	47,8
PB4 1200-870 / 420 10	420	–	50,5
PB4 1200-870 / 470 10	470	–	53,1

40 These values are valid for a density = 1 kg/dm³ and a kinematic viscosity of up to 20 mm²/s.

n = 485 rpm

Amacan PA4 1200-870, n = 485 rpm

Characteristic curves in acc. with ISO 9906 / 2 / 2B. n = speed

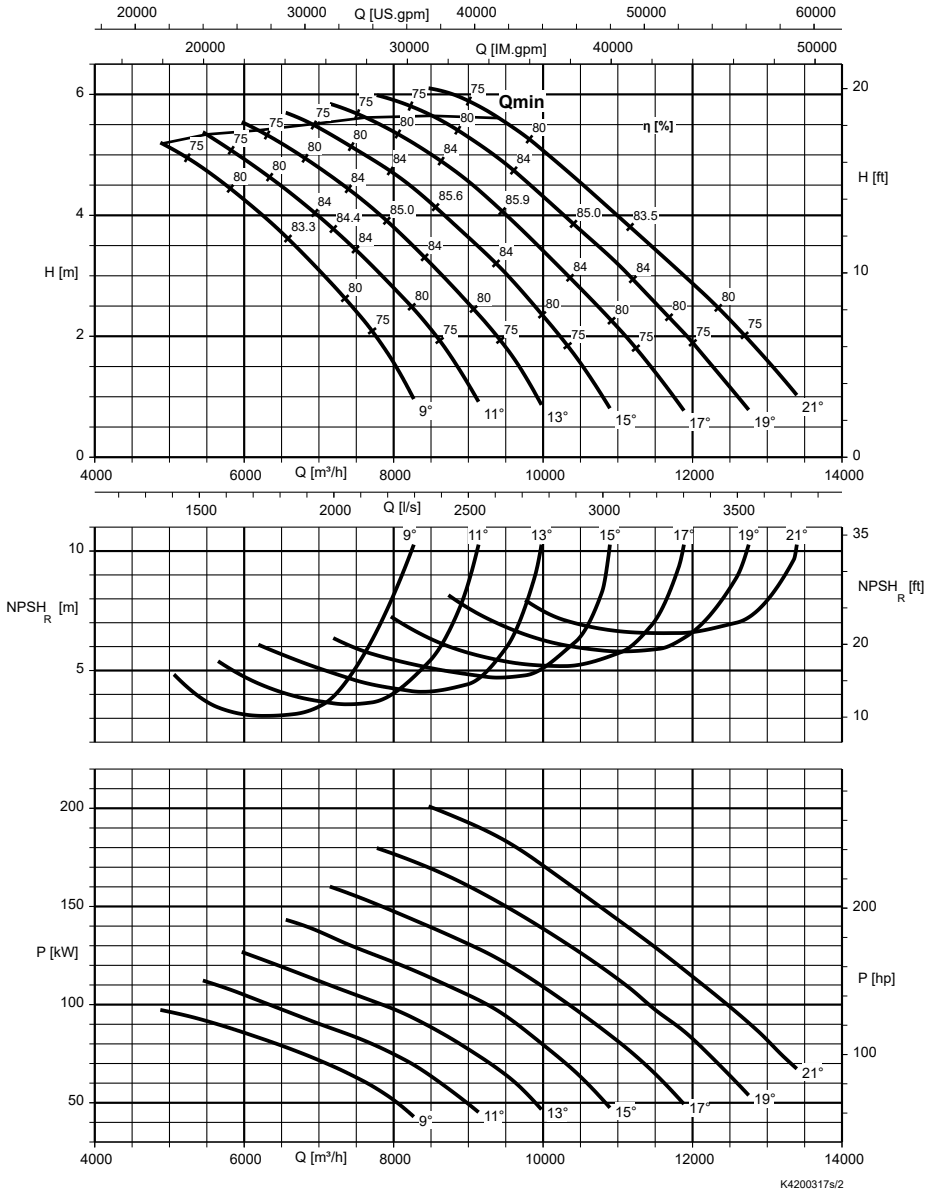

Table 47: Free passage

Angle [°]	Free passage [mm]	Angle [°]	Free passage [mm]
21	200	13	145
19	185	11	135
17	175	9	125
15	160		

Table 48: Rated power P_2 and mass moment of inertia J[41)]

Size	Rated power P_2 [kW]		Mass moment of inertia J
	UTG	XTG	[kgm²]
PA4 1200-870 / 130 12	130	130	35,2
PA4 1200-870 / 190 12	190	190	39,1
PA4 1200-870 / 251 12	250	–	45,0

1580.5/13-EN

41 These values are valid for a density = 1 kg/dm³ and a kinematic viscosity of up to 20 mm²/s.

Amacan PA4 1500-1060, n = 485 rpm

Characteristic curves in acc. with ISO 9906 / 2 / 2B. n = speed

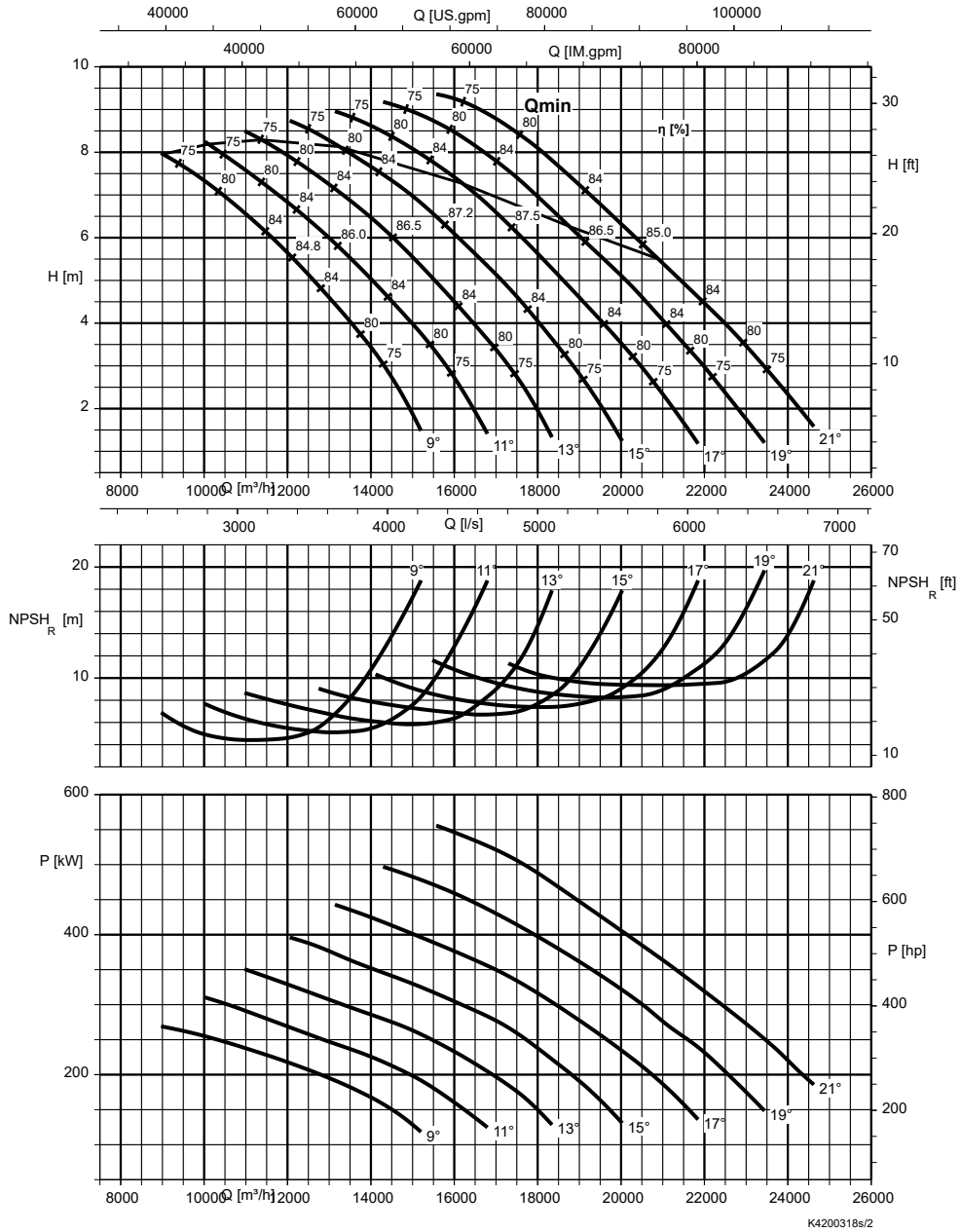

Table 49: Free passage

Angle [°]	Free passage [mm]	Angle [°]	Free passage [mm]
21	240	13	180
19	225	11	165
17	210	9	150
15	195		

Table 50: Rated power P_2 and mass moment of inertia J[42)]

Size	Rated power P_2 [kW]		Mass moment of inertia J
	UTG	XTG	[kgm²]
PA4 1500-1060 / 250 12	250	250	93,0
PA4 1500-1060 / 320 12	320	320	95,7
PA4 1500-1060 / 370 12	370	370	98,3
PA4 1500-1060 / 410 12	410	410	101,0

42 These values are valid for a density = 1 kg/dm³ and a kinematic viscosity of up to 20 mm²/s.

Amacan PA4 1600-1060, n = 485 rpm

Characteristic curves in acc. with ISO 9906 / 2 / 2B. n = speed

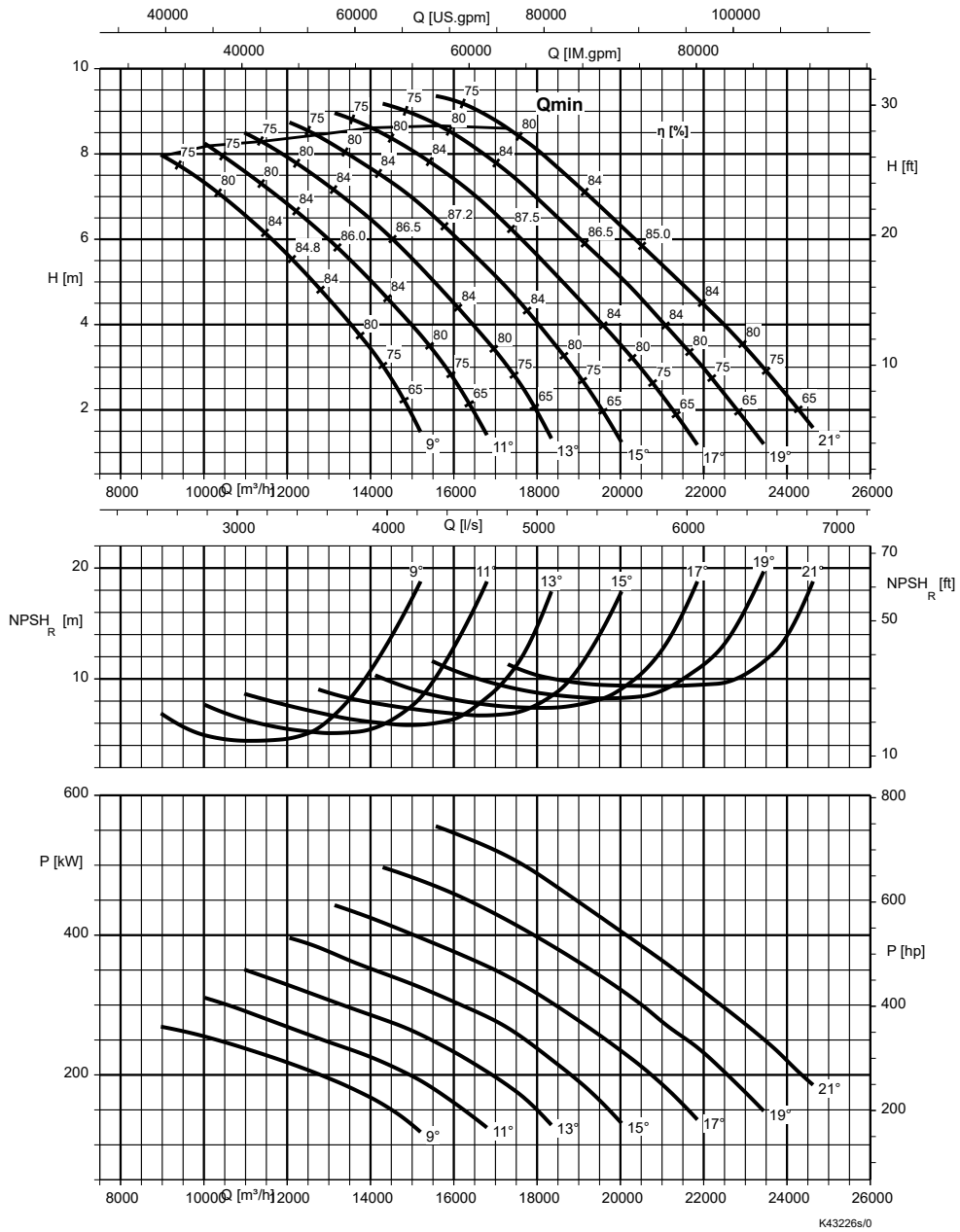

Table 51: Free passage

Angle [°]	Free passage [mm]	Angle [°]	Free passage [mm]
21	240	13	180
19	225	11	165
17	210	9	150
15	195		

Table 52: Rated power P_2 and mass moment of inertia J[43)]

Size	Rated power P_2 [kW]		Mass moment of inertia J
	UTG	XTG	[kgm²]
PA4 1600-1060 / 450 12	450	-	117,8
PA4 1600-1060 / 500 12	500	-	123,4
PA4 1600-1060 / 560 12	560	-	129,1
PA4 1600-1060 / 620 12	620	-	134,6

1580.5/13-EN

43 These values are valid for a density = 1 kg/dm³ and a kinematic viscosity of up to 20 mm²/s.

Amacan PB4 1500-1060, n = 485 rpm

Characteristic curves in acc. with ISO 9906 / 2 / 2B. n = speed

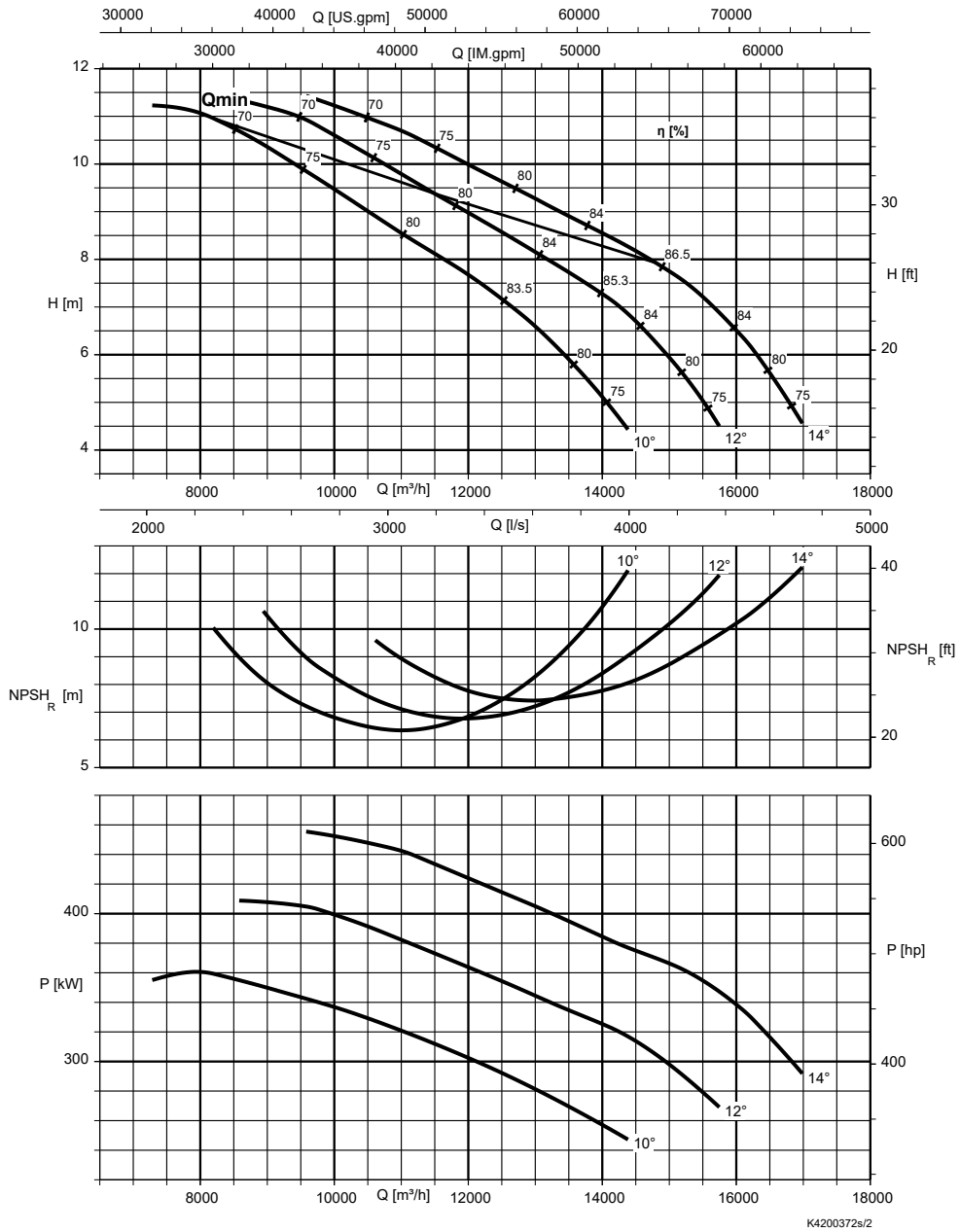

Table 53: Free passage

Angle [°]	Free passage [mm]	Angle [°]	Free passage [mm]
14	195	10	165
12	180		

Table 54: Rated power P_2 and mass moment of inertia J[44)]

Size	Rated power P_2 [kW]		Mass moment of inertia J
	UTG	XTG	[kgm²]
PB4 1500-1060 / 370 12	370	370	98,3
PB4 1500-1060 / 410 12	410	410	101,0

44 These values are valid for a density = 1 kg/dm³ and a kinematic viscosity of up to 20 mm²/s.

Amacan PB4 1600-1060, n = 485 rpm

Characteristic curves in acc. with ISO 9906 / 2 / 2B. n = speed

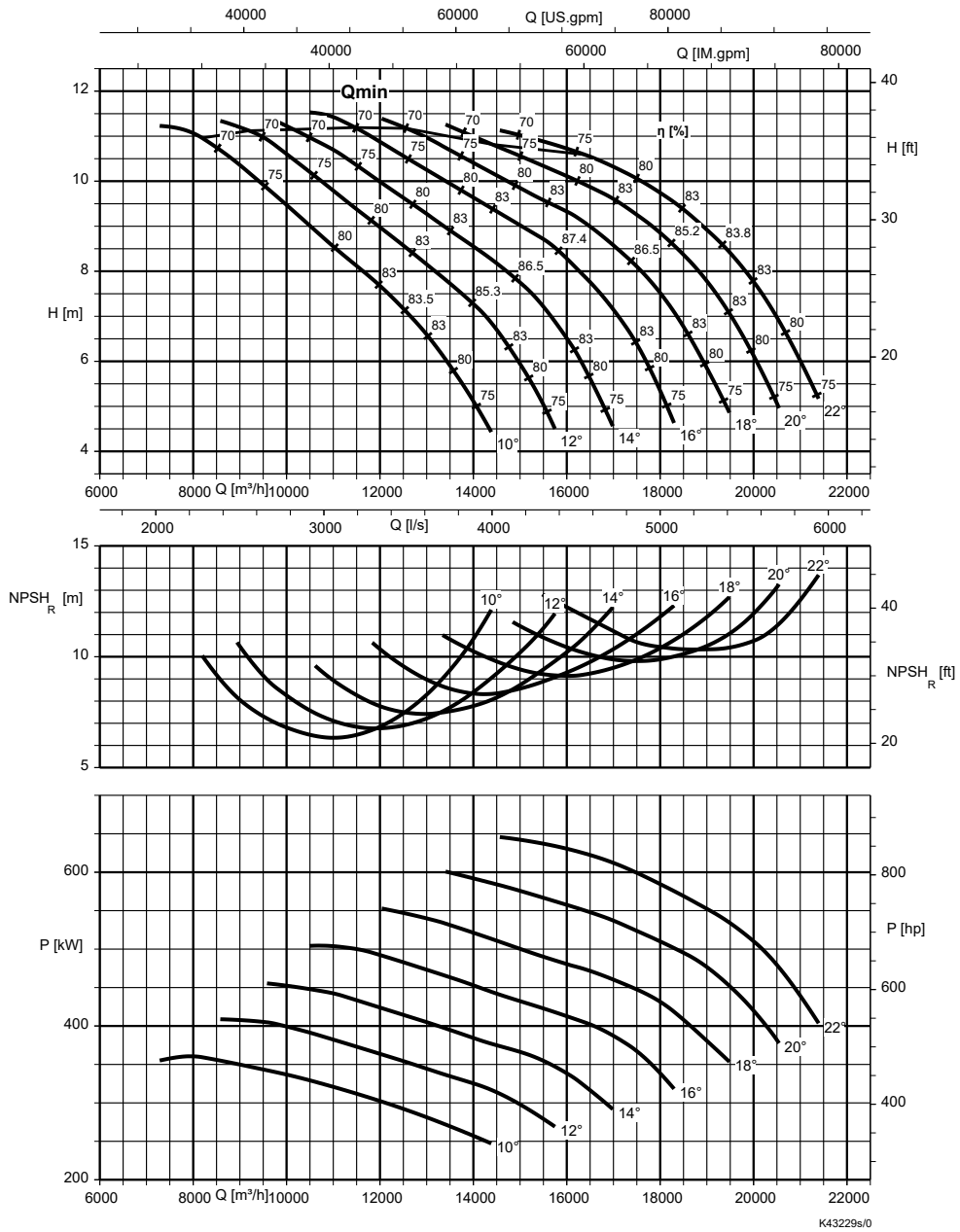

Table 55: Free passage

Angle [°]	Free passage [mm]	Angle [°]	Free passage [mm]
22	255	14	195
20	240	12	180
18	225	10	165
16	210		

Table 56: Rated power P_2 and mass moment of inertia J[45)]

Size	Rated power P_2 [kW]		Mass moment of inertia J
	UTG	XTG	[kgm²]
PB4 1600-1060 / 450 12	450	-	117,8
PB4 1600-1060 / 500 12	500	-	123,4
PB4 1600-1060 / 560 12	560	-	129,1
PB4 1600-1060 / 620 12	620	-	134,6
PB4 1600-1060 / 680 12	680	-	140,1

1580.5/13-EN

45 These values are valid for a density = 1 kg/dm³ and a kinematic viscosity of up to 20 mm²/s.

n = 415 rpm

Amacan PA4 1500-1060, n = 415 rpm

Characteristic curves in acc. with ISO 9906 / 2 / 2B. n = speed

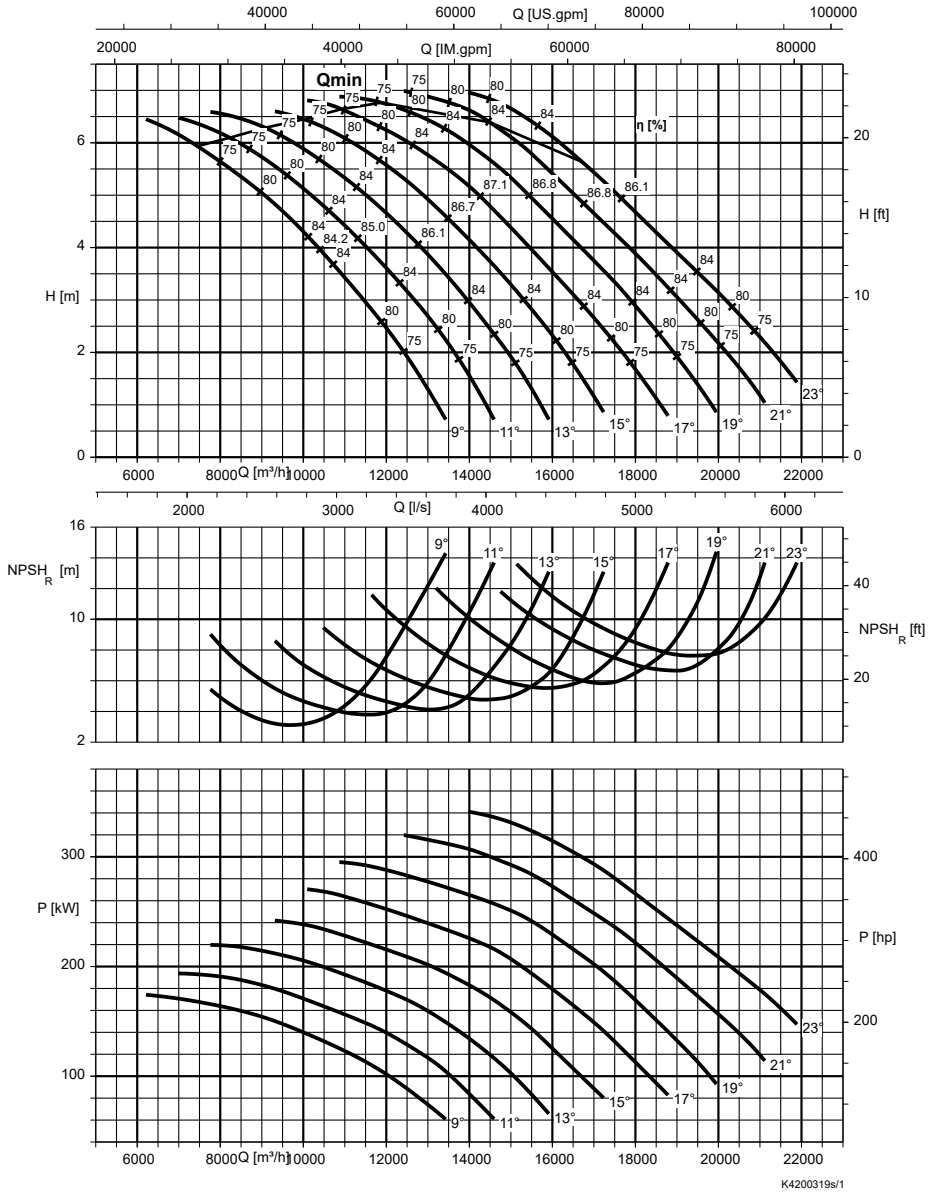

Table 57: Free passage

Angle [°]	Free passage [mm]	Angle [°]	Free passage [mm]
23	255	15	195
21	240	13	180
19	225	11	165
17	210	9	150

Table 58: Rated power P_2 and mass moment of inertia J[46)]

Size	Rated power P_2 [kW]		Mass moment of inertia J
	UTG	XTG	[kgm²]
PA4 1500-1060 / 210 14	210	210	95,7
PA4 1500-1060 / 270 14	270	270	98,3
PA4 1500-1060 / 340 14	330	330	101,0

46 These values are valid for a density = 1 kg/dm³ and a kinematic viscosity of up to 20 mm²/s.

Amacan PA4 1600-1060, n = 415 rpm

Characteristic curves in acc. with ISO 9906 / 2 / 2B. n = speed

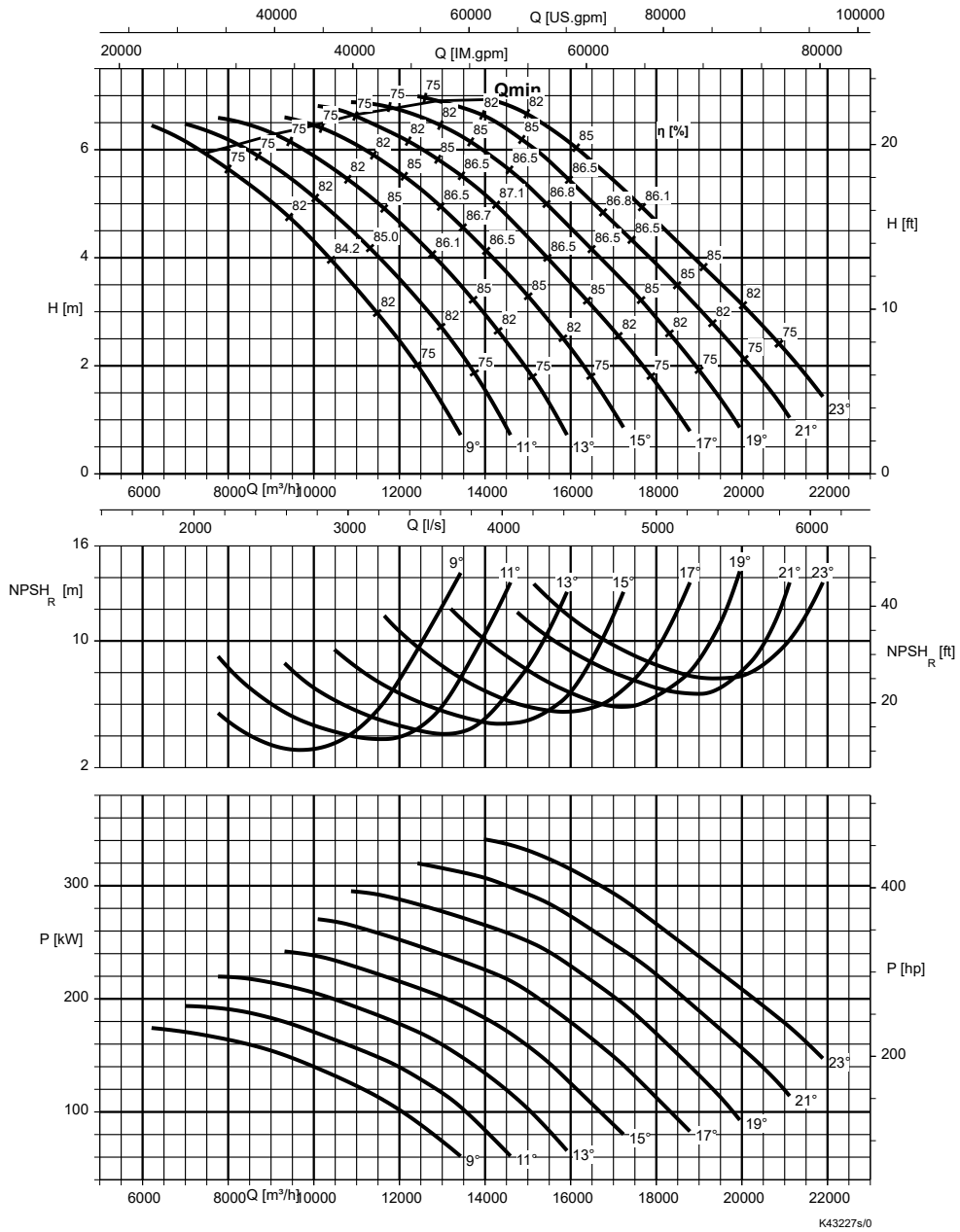

Table 59: Free passage

Angle [°]	Free passage [mm]	Angle [°]	Free passage [mm]
23	255	15	195
21	240	13	180
19	225	11	165
17	210	9	150

Table 60: Rated power P_2 and mass moment of inertia J[47)]

Size	Rated power P_2 [kW]		Mass moment of inertia J
	UTG	XTG	[kgm²]
PA4 1600-1060 / 370 14	370	-	111,3
PA4 1600-1060 / 410 14	410	-	122,8

1580.5/13-EN

47 These values are valid for a density = 1 kg/dm³ and a kinematic viscosity of up to 20 mm²/s.

Dimensions

UAG/XAG motors (500-270 to 600-350)

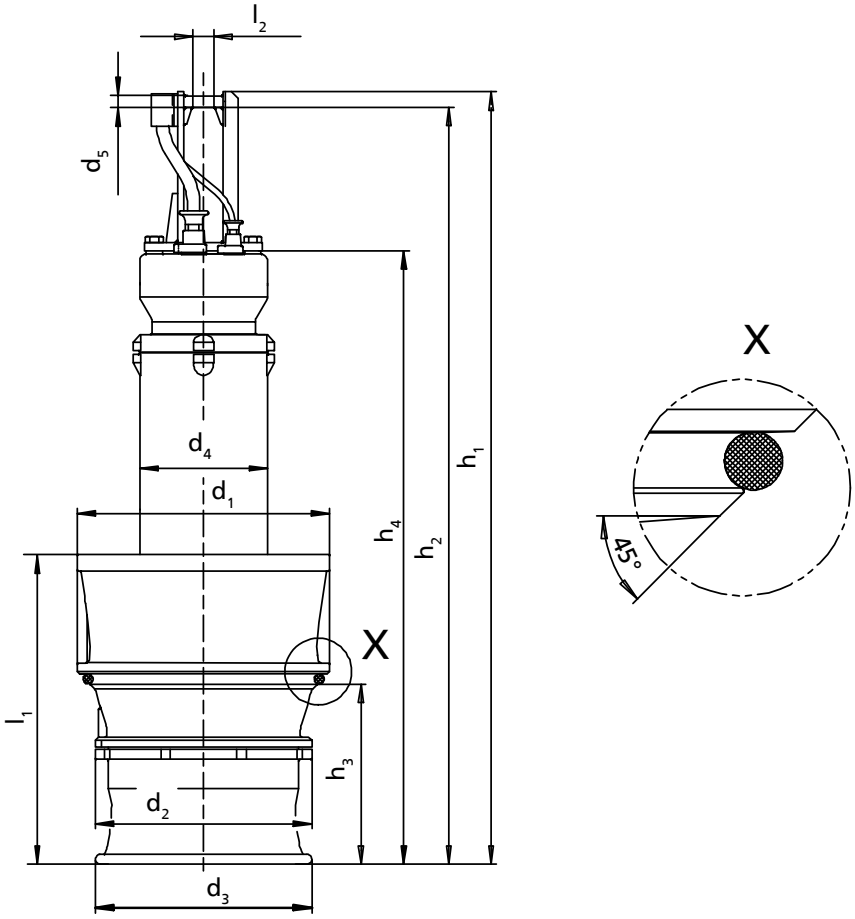

Fig. 1: Dimensions of the pump set

Table 61: Dimensions of the pump set [mm]

Pump size	Motor size	Number of poles	d_1	d_2	d_3	d_4	d_5	h_1	h_2	h_3	h_4	l_1	l_2	[kg][48]
A 500-270	10	4	470	380	380	280	30	1550	1500	305	1150	500	70	365
A 500-270	16	4	470	380	380	280	30	1550	1500	305	1150	500	70	370
A 500-270	20	4	470	380	380	280	30	1710	1660	305	1310	500	70	410
A 500-270	6	6	470	380	380	280	30	1550	1500	305	1150	500	70	360
A 600-350	20	4	570	485	485	280	30	1825	1775	555	1425	820	70	515
A 600-350	32	4	570	485	485	280	30	1825	1775	555	1425	820	70	555
A 600-350	40	4	570	485	485	280	30	1825	1775	555	1425	820	70	560
A 600-350	60	4	570	485	485	280	30	2010	1960	555	1610	820	70	620
A 600-350	70	4	570	485	485	280	30	2010	1960	555	1610	820	70	650
A 600-350	10	6	570	485	485	280	30	1665	1615	555	1265	820	70	465
A 600-350	16	6	570	485	485	280	30	1665	1615	555	1265	820	70	480
A 600-350	25	6	570	485	485	280	30	1825	1775	555	1425	820	70	530
B 600-350	32	4	570	485	485	280	30	1825	1775	555	1425	820	70	555
B 600-350	40	4	570	485	485	280	30	1825	1775	555	1425	820	70	560
B 600-350	60	4	570	485	485	280	30	2010	1960	555	1610	820	70	620
B 600-350	70	4	570	485	485	280	30	2010	1960	555	1610	820	70	650

48 Pump set with 10-metre power cable (400 V) and 5-metre support rope

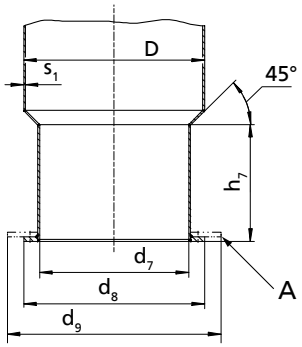

Fig. 2: Dimensions of the discharge tube

A	Suction umbrella; option for reducing the minimum water level

Table 62: Dimensions of the discharge tube [mm]

Pump size	Motor size	Number of poles	D	d_7	d_8	d_9	h_7	s_1
A 500-270	10	4	508	400	505	650	295	7
A 500-270	16	4	508	400	505	650	295	7
A 500-270	20	4	508	400	505	650	295	7
A 500-270	6	6	508	400	505	650	295	7
A 600-350	20	4	610	500	610	800	540	7
A 600-350	32	4	610	500	610	800	540	7
A 600-350	40	4	610	500	610	800	540	7
A 600-350	60	4	610	500	610	800	540	7
A 600-350	70	4	610	500	610	800	540	7
A 600-350	10	6	610	500	610	800	540	7
A 600-350	16	6	610	500	610	800	540	7
A 600-350	25	6	610	500	610	800	540	7
B 600-350	32	4	610	500	610	800	540	7
B 600-350	40	4	610	500	610	800	540	7
B 600-350	60	4	610	500	610	800	540	7
B 600-350	70	4	610	500	610	800	540	7

UTG-/XTG motors (700-470 to 1600-1060)

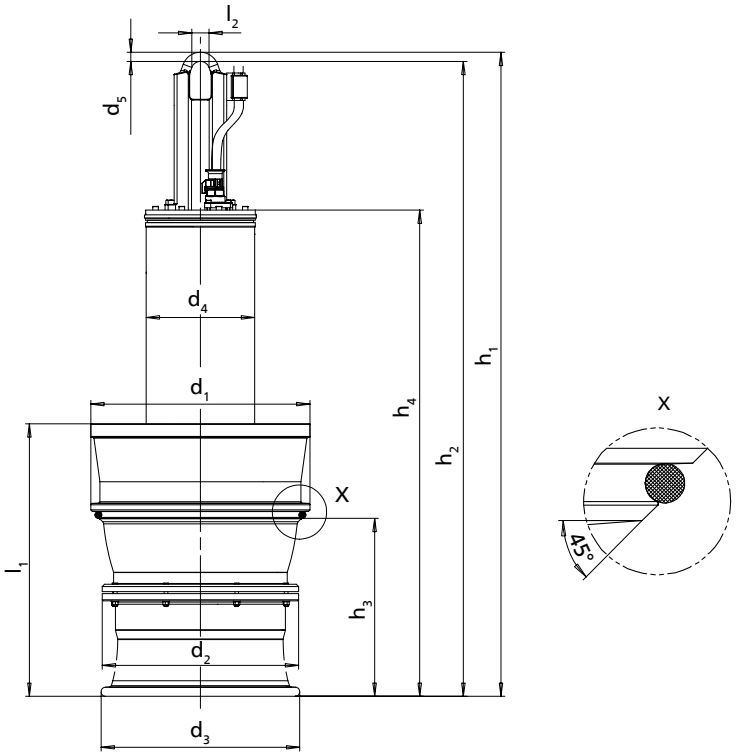

Fig. 3: Pump set dimensions

Table 63: Dimensions of the pump set

Size	Motor size	Number of poles	d_1	d_2	d_3	d_4	d_5	h_1	h_2	h_3	h_4	l_1	l_2	[kg][49]
A 700 - 470	47	6	675	585	585	385	40	2190	2150	430	1500	735	80	885
A 700 - 470	60	6	675	585	585	385	40	2190	2150	430	1500	735	80	925
A 700 - 470	80	6	675	585	585	385	40	2390	2350	430	1700	735	80	1015
A 700 - 470	100	6	675	585	585	385	40	2390	2350	430	1700	735	80	1070
A 700 - 470	30	8	675	585	585	385	40	2190	2150	430	1500	735	80	905
A 700 - 470	40	8	675	585	585	385	40	2190	2150	430	1500	735	80	910
B 700 - 470	60	6	675	585	585	385	40	2190	2150	430	1500	735	80	955
B 700 - 470	80	6	675	585	585	385	40	2390	2350	430	1700	735	80	1045
B 700 - 470	100	6	675	585	585	385	40	2390	2350	430	1700	735	80	1100
B 700 - 470	120	6	675	585	585	385	40	2390	2350	430	1700	735	80	1170
A 800 - 540	80	6	770	660	660	385	40	2445	2405	550	1755	945	80	1165
A 800 - 540	100	6	770	660	660	385	40	2445	2405	550	1755	945	80	1220
A 800 - 540	120	6	770	660	660	385	40	2445	2405	550	1755	945	80	1290
A 800 - 540	40	8	770	660	660	385	40	2245	2205	550	1555	945	80	1060
A 800 - 540	55	8	770	660	660	385	40	2445	2405	550	1755	945	80	1165
A 800 - 540	70	8	770	660	660	385	40	2445	2405	550	1755	945	80	1165
A 800 - 540	100	8	770	660	660	385	40	2445	2405	550	1755	945	80	1290
B 800 - 540	120	6	770	660	660	385	40	2445	2405	550	1755	945	80	1315
A 900 - 540	155	6	860	660	660	475	40	2615	2575	570	1925	1045	80	1555
A 900 - 540	180	6	860	660	660	475	40	2615	2575	570	1925	1045	80	1655
B 900 - 540	155	6	860	660	660	475	40	2615	2575	570	1925	1045	80	1580
B 900 - 540	180	6	860	660	660	475	40	2615	2575	570	1925	1045	80	1680
B 900 - 540	205	6	860	660	660	475	40	2615	2575	570	1925	1045	80	1735
A 1000 - 700	120	8	960	860	870	475	40	2820	2780	780	2130	1195	80	1990
A 1000 - 700	160	8	960	860	870	475	40	2820	2780	780	2130	1195	80	2160
A 1000 - 700	205	8	960	860	870	555	50	3230	3170	780	2630	1195	90	2765
A 1000 - 700	250	8	960	860	870	555	50	3230	3170	780	2630	1195	90	2895
A 1000 - 700	290	8	960	860	870	555	50	3230	3170	780	2630	1195	90	3060

49 Pump set with 10-metre power cable (400 V) and 5-metre support rope

Size	Motor size	Number of poles	d_1	d_2	d_3	d_4	d_5	h_1	h_2	h_3	h_4	l_1	l_2	[kg][49)]
A 1000 - 700	60	10	960	860	870	475	40	2820	2780	780	2130	1195	80	1910
A 1000 - 700	90	10	960	860	870	475	40	2820	2780	780	2130	1195	80	2010
A 1000 - 700	120	10	960	860	870	475	40	2820	2780	780	2130	1195	80	2095
B 1000 - 700	160	8	960	860	870	475	40	2820	2780	780	2130	1195	80	2200
B 1000 - 700	205	8	960	860	870	555	50	3230	3170	780	2630	1195	90	2805
B 1000 - 700	250	8	960	860	870	555	50	3230	3170	780	2630	1195	90	2935
B 1000 - 700	290	8	960	860	870	555	50	3230	3170	780	2630	1195	90	3100
A 1200 - 870	200	10	1150	1050	1050	555	50	3290	3230	1015	2690	1405	90	3340
A 1200 - 870	250	10	1150	1050	1050	555	50	3290	3230	1015	2690	1405	90	3590
A 1200 - 870	310	10	1150	1050	1050	650	60	3740	3665	1015	3040	1405	90	4360
A 1200 - 870	365	10	1150	1050	1050	650	60	3965	3890	1015	3265	1405	90	4730
A 1200 - 870	420	10	1150	1050	1050	650	60	3965	3890	1015	3265	1405	90	4990
A 1200 - 870	130	12	1150	1050	1050	555	50	3290	3230	1015	2690	1405	90	3140
A 1200 - 870	190	12	1150	1050	1050	555	50	3290	3230	1015	2690	1405	90	3560
A 1200 - 870	251	12	1150	1050	1050	650	60	3740	3665	1015	3040	1405	90	4360
B 1200 - 870	250	10	1150	1050	1050	555	50	3290	3230	1015	2690	1405	90	3710
B 1200 - 870	310	10	1150	1050	1050	650	60	3740	3665	1015	3040	1405	90	4480
B 1200 - 870	365	10	1150	1050	1050	650	60	3965	3890	1015	3265	1405	90	4850
B 1200 - 870	420	10	1150	1050	1050	650	60	3965	3890	1015	3265	1405	90	5110
B 1200 - 870	470	10	1150	1050	1050	650	60	3965	3890	1015	3265	1405	90	5290
A 1500 - 1060	250	12	1430	1300	1300	650	60	3775	3700	1475	3075	1860	90	5220
A 1500 - 1060	320	12	1430	1300	1300	650	60	4000	3925	1475	3330	1860	90	5680
A 1500 - 1060	370	12	1430	1300	1300	650	60	4000	3925	1475	3330	1860	90	5840
A 1500 - 1060	410	12	1430	1300	1300	650	60	4000	3925	1475	3330	1860	90	6020
A 1500 - 1060	210	14	1430	1300	1300	650	60	4000	3925	1475	3330	1860	90	5530
A 1500 - 1060	270	14	1430	1300	1300	650	60	4000	3925	1475	3330	1860	90	5730
A 1500 - 1060	340	14	1430	1300	1300	650	60	4000	3925	1475	3330	1860	90	5970
B 1500 - 1060	370	12	1430	1300	1300	650	60	4000	3925	1475	3330	1860	90	6020
B 1500 - 1060	410	12	1430	1300	1300	650	60	4000	3925	1475	3330	1860	90	6200
A 1600-1060	450	12	1540	1350	1300	760	70	4085	3995	1260	3375	1800	100	7050
A 1600-1060	500	12	1540	1350	1300	760	70	4085	3995	1260	3375	1800	100	7500
A 1600-1060	560	12	1540	1350	1300	775	70	4385	4295	1260	3675	1800	100	7990
A 1600-1060	620	12	1540	1350	1300	775	70	4385	4295	1260	3675	1800	100	8200
B 1600-1060	450	12	1540	1350	1300	760	70	4085	3995	1260	3375	1800	100	7230
B 1600-1060	500	12	1540	1350	1300	760	70	4085	3995	1260	3375	1800	100	7680
B 1600-1060	560	12	1540	1350	1300	775	70	4385	4295	1260	3675	1800	100	8170
B 1600-1060	620	12	1540	1350	1300	775	70	4385	4295	1260	3675	1800	100	8380
B 1600-1060	680	12	1540	1350	1300	775	70	4385	4295	1260	3675	1800	100	8660
A 1600-1060	370	14	1540	1350	1300	760	70	4085	3995	1260	3375	1800	100	7050
A 1600-1060	410	14	1540	1350	1300	760	70	4085	3995	1260	3375	1800	100	7370

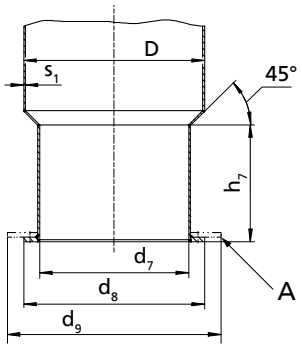

Fig. 4: Discharge tube dimensions

A	Suction umbrella; option for reducing the minimum water level

1580.5/13-EN

Table 64: Dimensions of the discharge tube [mm]

Size	Motor size	Number of poles	D	d_7	d_8	d_9	h_7	s_1
A 700 - 470	47	6	711	600	710	1100	420	8
A 700 - 470	60	6	711	600	710	1100	420	8
A 700 - 470	80	6	711	600	710	1100	420	8
A 700 - 470	100	6	711	600	710	1100	420	8
A 700 - 470	30	8	711	600	710	1100	420	8
A 700 - 470	40	8	711	600	710	1100	420	8
B 700 - 470	60	6	711	600	710	1100	420	8
B 700 - 470	80	6	711	600	710	1100	420	8
B 700 - 470	100	6	711	600	710	1100	420	8
B 700 - 470	120	6	711	600	710	1100	420	8
A 800 - 540	80	6	813	680	810	1250	525	8
A 800 - 540	100	6	813	680	810	1250	525	8
A 800 - 540	120	6	813	680	810	1250	525	8
A 800 - 540	40	8	813	680	810	1250	525	8
A 800 - 540	55	8	813	680	810	1250	525	8
A 800 - 540	70	8	813	680	810	1250	525	8
A 800 - 540	100	8	813	680	810	1250	525	8
B 800 - 540	120	6	813	680	810	1250	525	8
A 900 - 540	155	6	914	700	910	1250	515	8
A 900 - 540	180	6	914	700	910	1250	515	8
B 900 - 540	155	6	914	700	910	1250	515	8
B 900 - 540	180	6	914	700	910	1250	515	8
B 900 - 540	205	6	914	700	910	1250	515	8
A 1000 - 700	120	8	1016	880	1015	1600	765	10
A 1000 - 700	160	8	1016	880	1015	1600	765	10
A 1000 - 700	205	8	1016	880	1015	1600	765	10
A 1000 - 700	250	8	1016	880	1015	1600	765	10
A 1000 - 700	290	8	1016	880	1015	1600	765	10
A 1000 - 700	60	10	1016	880	1015	1600	765	10
A 1000 - 700	90	10	1016	880	1015	1600	765	10
A 1000 - 700	120	10	1016	880	1015	1600	765	10
B 1000 - 700	160	8	1016	880	1015	1600	765	10
B 1000 - 700	205	8	1016	880	1015	1600	765	10
B 1000 - 700	250	8	1016	880	1015	1600	765	10
B 1000 - 700	290	8	1016	880	1015	1600	765	10
A 1200 - 870	200	10	1220	1070	1220	2000	1000	12
A 1200 - 870	250	10	1220	1070	1220	2000	1000	12
A 1200 - 870	310	10	1220	1070	1220	2000	1000	12
A 1200 - 870	365	10	1220	1070	1220	2000	1000	12
A 1200 - 870	420	10	1220	1070	1220	2000	1000	12
A 1200 - 870	130	12	1220	1070	1220	2000	1000	12
A 1200 - 870	190	12	1220	1070	1220	2000	1000	12
A 1200 - 870	251	12	1220	1070	1220	2000	1000	12
B 1200 - 870	250	10	1220	1070	1220	2000	1000	12
B 1200 - 870	310	10	1220	1070	1220	2000	1000	12
B 1200 - 870	365	10	1220	1070	1220	2000	1000	12
B 1200 - 870	420	10	1220	1070	1220	2000	1000	12
B 1200 - 870	470	10	1220	1070	1220	2000	1000	12
A 1500 - 1060	250	12	1525	1330	1520	2450	1460	12
A 1500 - 1060	320	12	1525	1330	1520	2450	1460	12
A 1500 - 1060	370	12	1525	1330	1520	2450	1460	12
A 1500 - 1060	410	12	1525	1330	1520	2450	1460	12
A 1500 - 1060	210	14	1525	1330	1520	2450	1460	12
A 1500 - 1060	270	14	1525	1330	1520	2450	1460	12
A 1500 - 1060	340	14	1525	1330	1520	2450	1460	12
B 1500 - 1060	370	12	1525	1330	1520	2450	1460	12
B 1500 - 1060	410	12	1525	1330	1520	2450	1460	12

Size	Motor size	Number of poles	D	d_7	d_8	d_9	h_7	s_1
A 1600 - 1060	450	12	1625	1420	1620	2450	1230	12
A 1600 - 1060	500	12	1625	1420	1620	2450	1230	12
A 1600 - 1060	560	12	1625	1420	1620	2450	1230	12
A 1600 - 1060	620	12	1625	1420	1620	2450	1230	12
B 1600 - 1060	450	12	1625	1420	1620	2450	1230	12
B 1600 - 1060	500	12	1625	1420	1620	2450	1230	12
B 1600 - 1060	560	12	1625	1420	1620	2450	1230	12
B 1600 - 1060	620	12	1625	1420	1620	2450	1230	12
B 1600 - 1060	680	12	1625	1420	1620	2450	1230	12
A 1600 - 1060	370	14	1625	1420	1620	2450	1230	12
A 1600 - 1060	410	14	1625	1420	1620	2450	1230	12

Installation types

Six different types are available for selection[50]:

Table 65: Overview of installation types

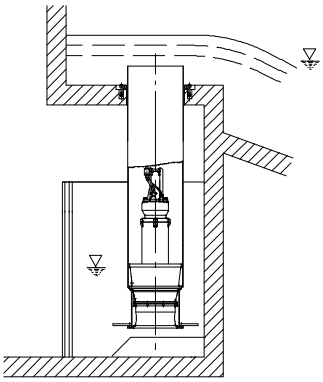	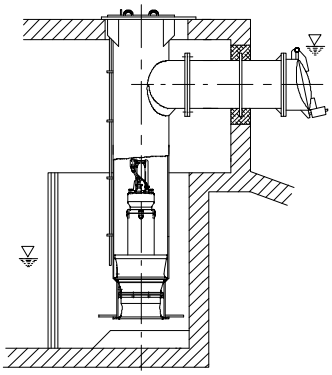	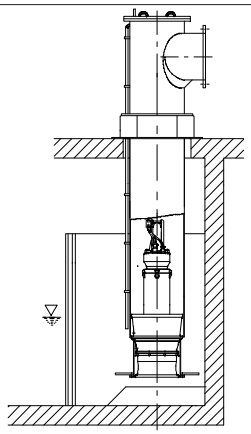
BU discharge tube Overflow design for installation in open intake chamber	**CU discharge tube** Design with underfloor discharge for installation in open intake chamber	**DU discharge tube** Design with above floor discharge nozzle for installation in open intake chamber
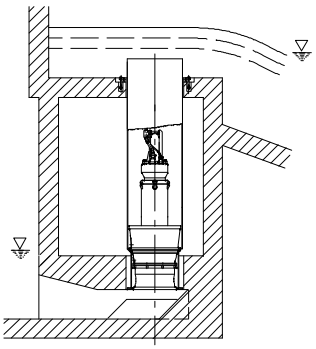	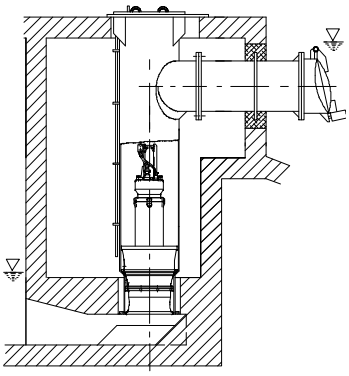	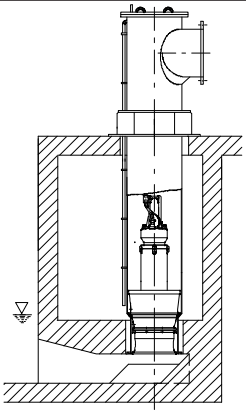
BG discharge tube Overflow design for installation in covered intake chamber with low suction-side water levels	**CG discharge tube** Design with underfloor discharge for installation in covered intake chamber with low suction-side water levels	**DG discharge tube** Design with above-floor discharge nozzle for installation in covered intake chamber with low suction-side water levels

1580.5/13-EN

50 For information on the various designs (foundation measurements, intake chamber, etc.) refer to the general arrangement drawings.

Scope of supply

Depending on the model, the following items are included in the scope of supply:

- Pump set complete with power cables
- O-ring
- Back-up name plate

Optional accessories:

- Support rope
- Accessories for installing the cable guide:
  - Fitting
  - Turnbuckle
  - Support
  - Shackle
  - Cable clamps
- Cable support sleeves
- Flow-straightening vane to prevent floor vortices
- Discharge tube

1580.5/13-EN

Accessories

Flow-straightening vane and intake chamber

Design of the intake chamber wall surfaces (to prevent vortex formation)

The flow-straightening vane is indispensable for the inlet conditions of the pump set. It prevents the development of a submerged vortex (floor vortex) which could cause a drop in performance, for example. In addition, the floor and wall surfaces of the intake chamber should be designed as a rough concrete surface. Rough surfaces minimise the separation of boundary layers that may cause wall and floor vortices.

Flow-straightening vane and intake chamber

- The anti-swirl baffles in the bellmouth must be aligned with the flow-straightening vane.
- The bail of the pump is oriented in the same direction as the anti-swirl baffles in the bellmouth.

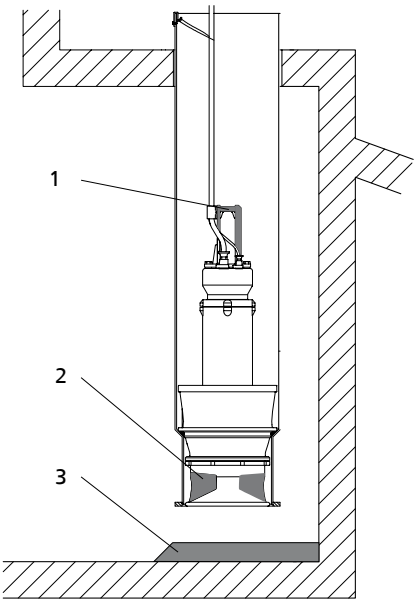

Fig. 5: Installation position of the pump set

1	Bail
2	Anti-swirl baffles
3	Flow-straightening vane

1580.5/13-EN

Variant 1
Flow-straightening vane cast from concrete

Variant 2
Steel section

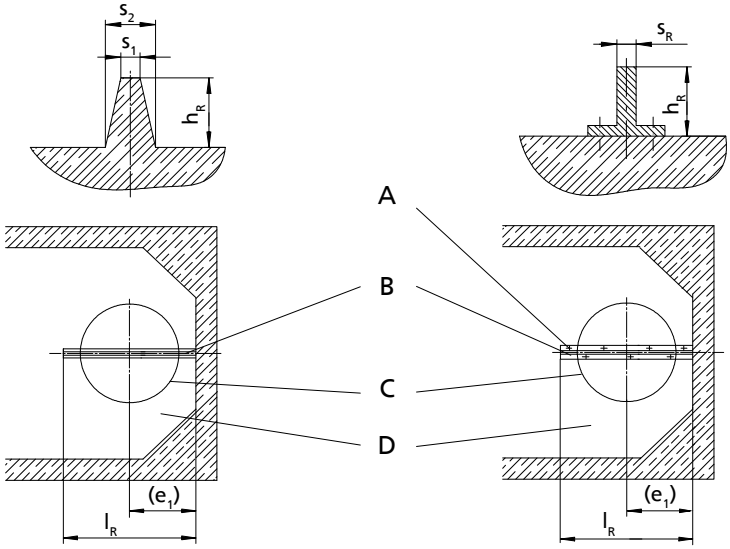

A	Bolted to the floor of the intake chamber
B	Flow-straightening vane centred beneath the discharge tube
C	Discharge tube
D	Intake chamber

Support rope and turnbuckle in the discharge tube

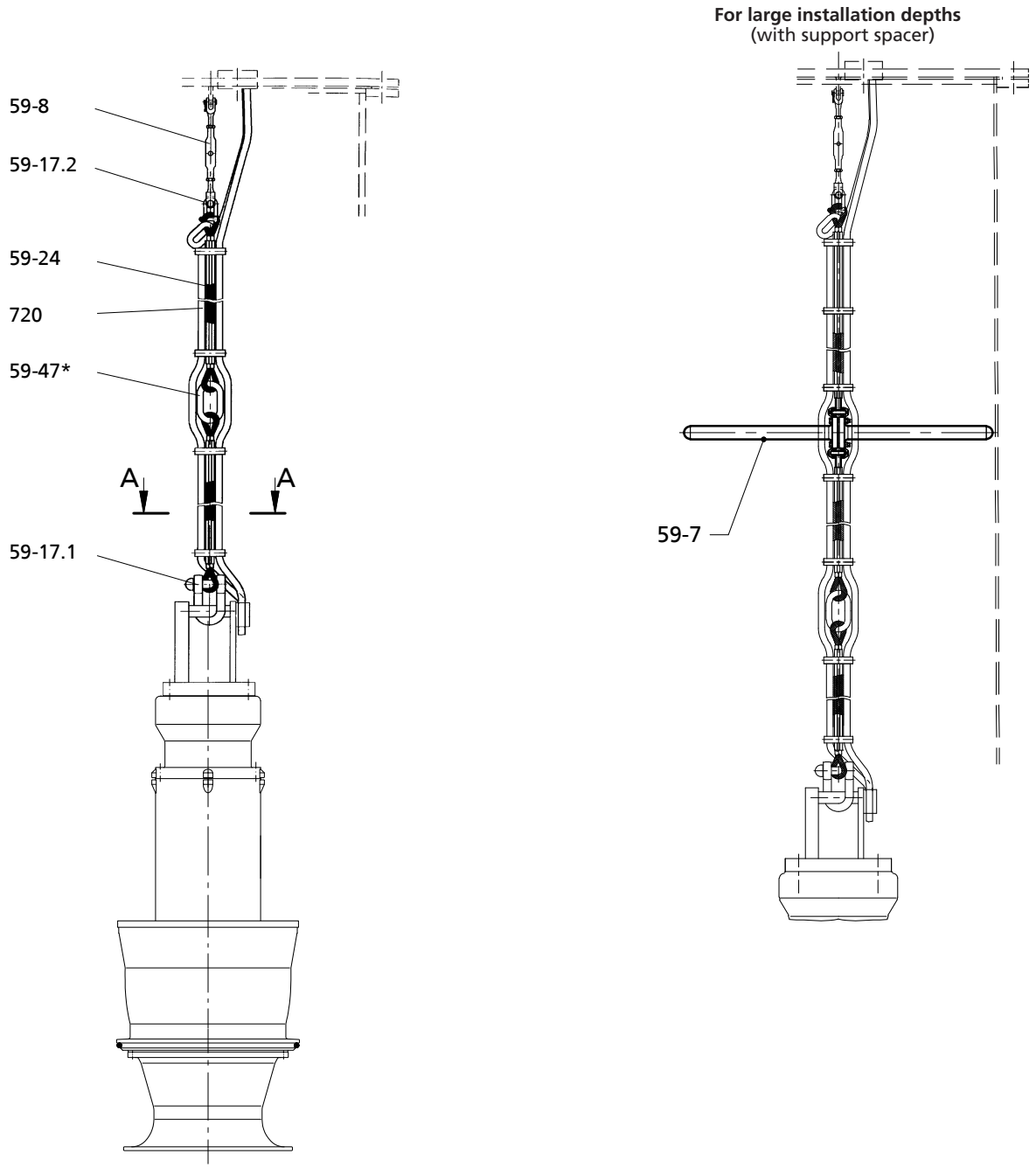

*= The number of (intermediate) lifting rings depends on the lifting height of the lifting equipment and on the building structure. (Intermediate lifting rings are supplied as an option).

Table 66: List of components

Part No.	Description	Material
59-8	Turnbuckle	Stainless steel
59-17.2	Shackle	Stainless steel
59-47	(Intermediate) lifting ring(s)	Stainless steel
59-24	Rope, low-rotation design	Stainless steel

1580.5/13-EN

Part No.	Description	Material
720	Fitting	EPDM
59-17.1	Shackle	Galvanised steel (stainless steel optional)
59-7	Support	GFRP

Cross-section of cable support

A-A

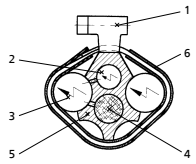

Table 67: List of components

Part No.	Description	Part No.	Description
1	Cable clamp (all approx. 300 mm to 400 mm)	4	Support rope 59-24
2	Control cable	5	Fitting
3	Power cable	6	Clamp cover

Discharge tube cover with cable gland

Design: with welding sleeve

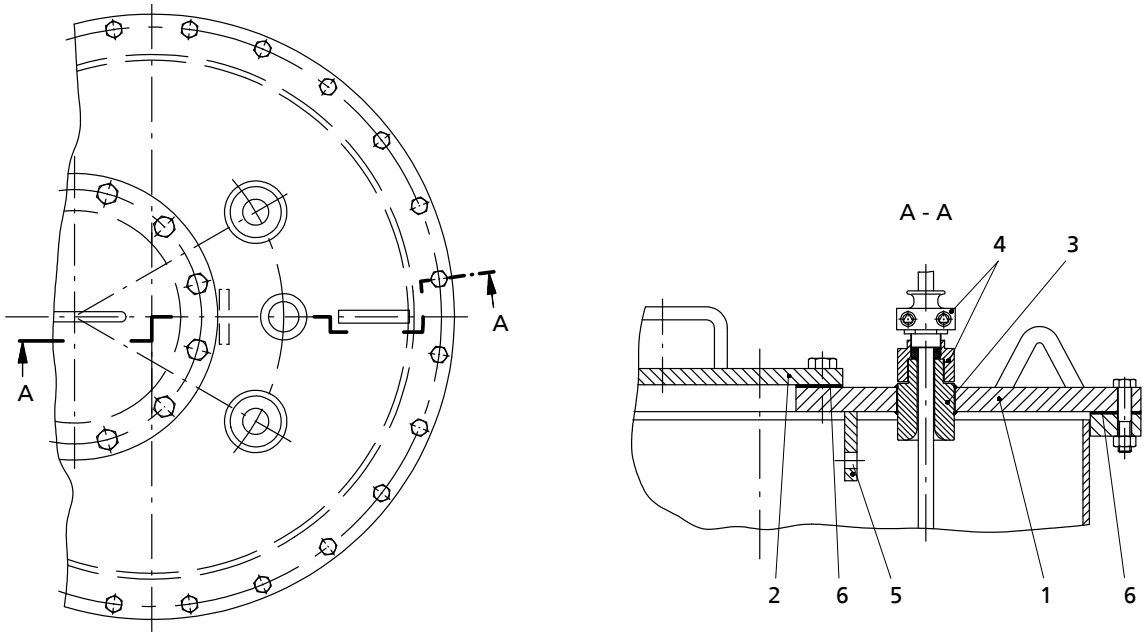

Fig. 6: Design variant with welding sleeve

Table 68: List of components

Part No.	Description	Part No.	Description
1	Discharge tube cover[51)]	4	Threaded bush with cable entry to DIN 22419 with strain relief and protection against kinking and twisting
2	Cover	5	Eyeplate for fastening the cable support (support rope)
3	Welding sleeve	6	Gasket, e.g. fabric-reinforced rubber

51 Discharge tube cover also available in split design.

Design variant with transit frame (up to 1 bar)

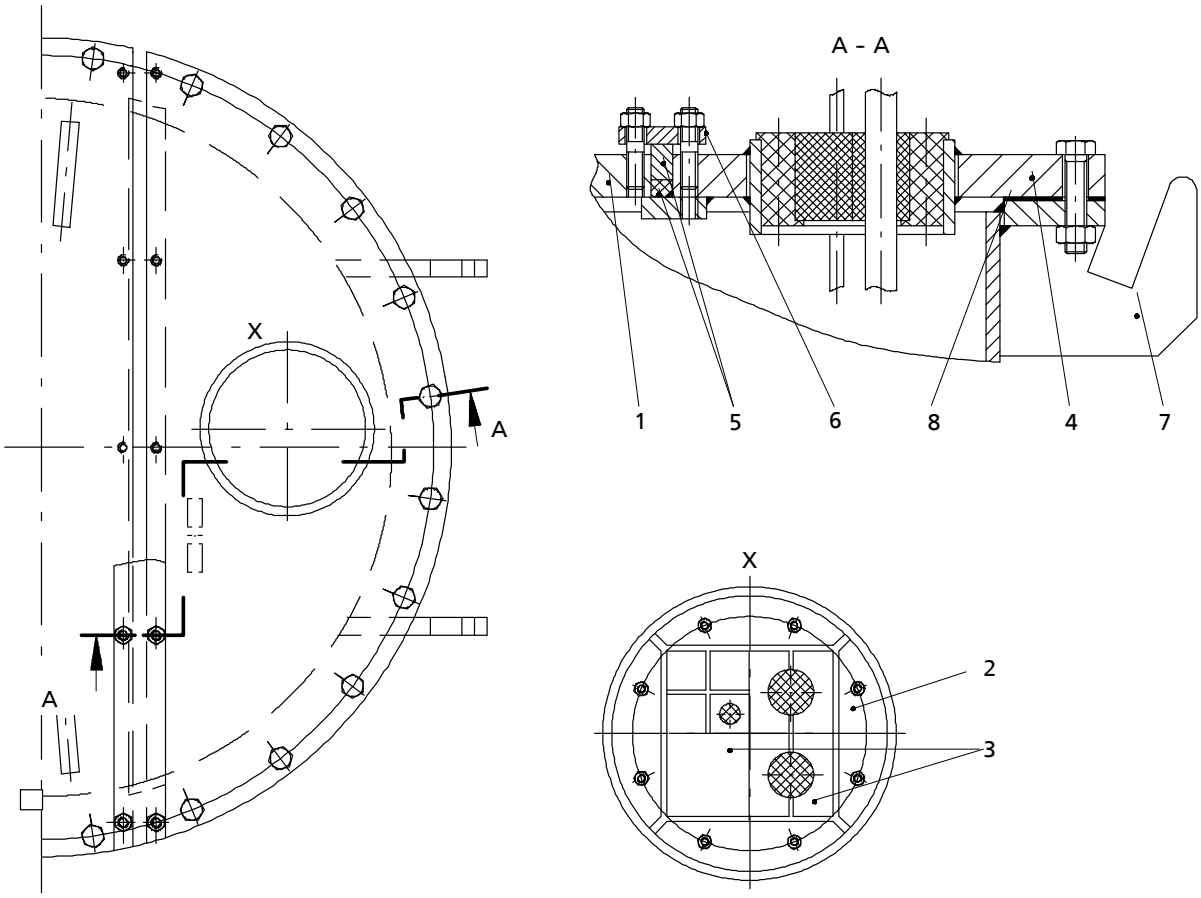

Fig. 7: Design variant with transit frame (up to 1 bar)

Table 69: List of components

Part No.	Description
1	Discharge tube cover[52)]
2	Transit frame (cable gland)
3	Packing blocks and insert blocks
4	Cover segment with cable gland
5	Closed-cell profile seal in groove between the two cover parts
6	Sealing arrangement of groove between the two cover parts
7	Support brackets for cover segment with cable glands
8	Gasket (e.g. rubber with fabric reinforcement)

1580.5/13-EN

52 Discharge tube cover also available in single-piece design.

General assembly drawings

Amacan P 500-270
Amacan P 600-350
Motor version: UAG/XAG

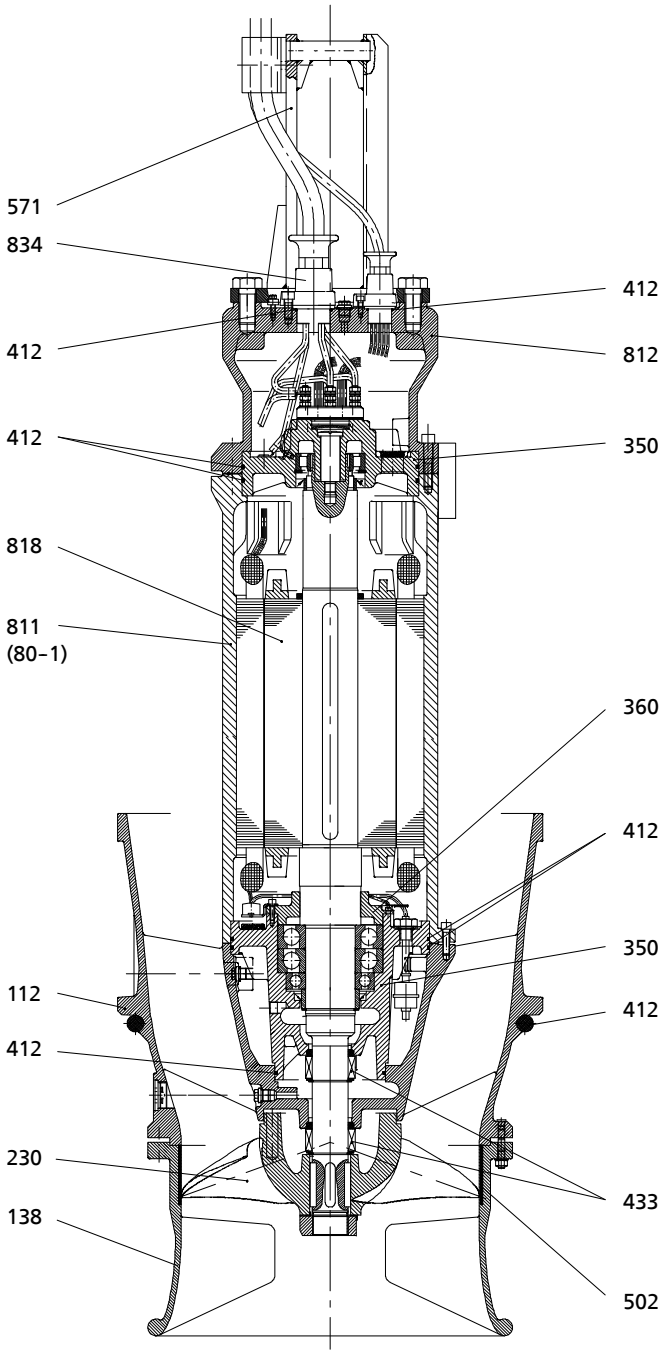

0W 380 600-00

Table 70: List of components

Part No.	Description	Part No.	Description
112	Pump bowl	502	Casing wear ring
138	Bellmouth	571	Bail
230	Impeller	811	Motor housing
350	Bearing housing	812	Motor housing cover
360	Bearing cover	818	Shaft (rotor)
412	O-ring	834	Cable gland
433	Mechanical seal	-	-

Amacan P 700-470
Amacan P 800-540
Amacan P 900-540
Amacan P 1000-700
Amacan P 1200-870
Amacan P 1500-1600
Amacan P 1600-1060
Motor version: UTG/XTG

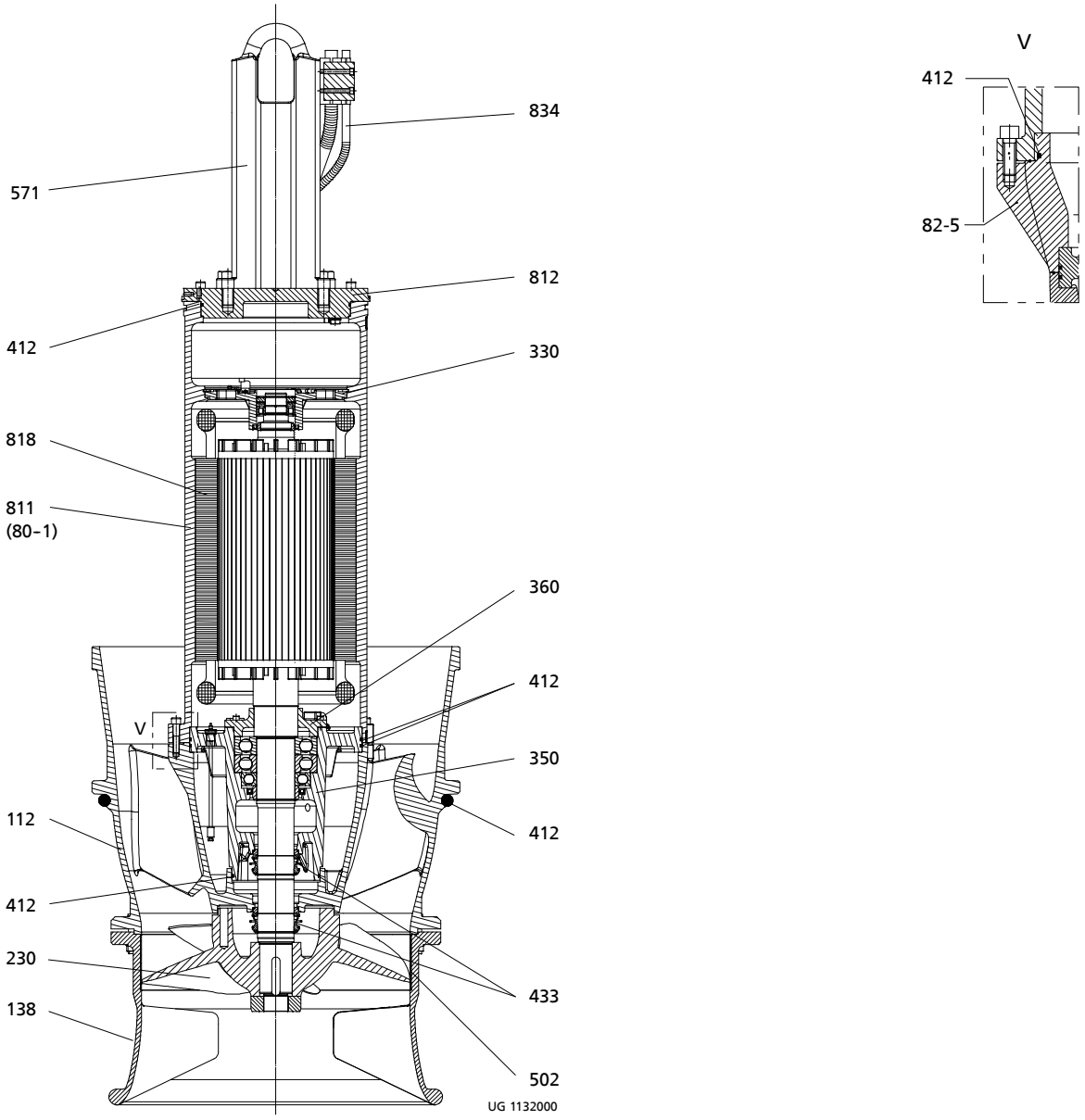

Table 71: List of components

Part No.	Description	Part No.	Description
112	Pump bowl	502	Casing wear ring
138	Bellmouth	571	Bail
230	Impeller	811	Motor housing
330	Bearing bracket	812	Motor housing cover
350	Bearing housing	82-5	Adapter
360	Bearing cover	818	Shaft (rotor)
412	O-ring	834	Cable gland
433	Mechanical seal	-	-

2024-04-16

1580.5/13-EN

LENNTECH
WATER TREATMENT SOLUTIONS
info@lenntech.com Tel. +31-152-610-900
www.lenntech.com Fax. +31-152-616-289

KSB