Submersible Motor Pump

Amarex N S 32-160

DN 32
50 Hz

Type Series Booklet

Legal information/Copyright

Type Series Booklet Amarex N S 32-160

All rights reserved. The contents provided herein must neither be distributed, copied, reproduced, edited or processed for any other purpose, nor otherwise transmitted, published or made available to a third party without the manufacturer's express written consent.

Subject to technical modification without prior notice.

© KSB Aktiengesellschaft, Frankenthal 15.03.2016

Contents

Waste Water **4**
Submersible Motor Pump 4
Amarex N S 32 4
Main applications 4
Fluids handled 4
Operating data 4
Designation 4
Design details 4
Materials 4
Product benefits 5
Certifications 5
Programme overview / selection tables 6
Table of fluids handled 6
Overview of product features 6
Technical data 7
Characteristic curves 8
Amarex N S 32-160, n = 2900 rpm 8
Dimensions and connections 9
Connections 9
Dimensions 10
Installation types 13
Installation information 14
Suggested installation layouts for transportable pump sets 14
Suggested installation layouts for stationary pump sets 15
Suggested electrical installation layouts 17
Scope of supply 17
Accessories 18
Installation parts for stationary pump sets 18
Installation parts for transportable pump sets 19
Chain for stationary and transportable pump sets 19
Pump accessories 19
Electrical accessories 21

Waste Water

Submersible Motor Pump

Amarex N S 32

Main applications

- Handling waste water in intermittent operation

Fluids handled

- Domestic waste water
- Raw waste water
- Waste water with faeces

Operating data

Operating properties

Characteristic		Value
Flow rate	Q [m³/h]	≤ 16
	Q [l/s]	≤ 4.4
Head	H [m]	≤ 29
Fluid temperature	T [°C]	≤ 40
Motor rating	P_2 [kW]	1.5

Designation

Example: Amarex N S 32 - 160 / 02 YLG 160

Designation key

Code	Description	
Amarex N	Type series	
S	Impeller type	
	S	Cutter
32	Nominal discharge nozzle diameter [mm]	
160	Size of hydraulic system	
0	Motor size	
2	Number of motor poles	
YL	Motor design	
	YL	With explosion protection T4 (40 °C)
	UL	Without explosion protection, fluid temperatures < 40 °C
G	Casing material	
	G	Grey cast iron
160	Nominal impeller diameter [mm]	

Design details

Design

- Fully floodable submersible motor pump
- Not self-priming
- Close-coupled design

Drive

- Three-phase asynchronous squirrel-cage motor
- Motors integrated in explosion-proof pump sets are supplied in Ex d IIB type of protection.

Shaft seal

Drive end:

- Shaft seal ring

Pump end:

- Uni-directional mechanical seal with liquid reservoir

Impeller type

S impeller:

	Impeller with cutter (impeller type S)	**Suitable for the following fluids:** fluids containing coarse substances and/or long fibres

S impellers are suitable for handling the following fluids:

- Domestic waste water
- Grey water
- Waste water with faeces

Bearings

- Grease-lubricated bearings sealed for life
- Maintenance-free

Materials

Overview of material variants for standard variants

Component		S impeller
		Amarex N S 32-160/...
		G
Casing		EN-GJL-250
Intermediate casing		EN-GJL-250
Impeller		EN-GJL-250
Cutter		1.2080.02 (K100)
Shaft		1.4021
Shaft seal ring	Drive end	NBR
Mechanical seal	Pump end	SiC/SiC
Screws/bolts		A2
Elastomers		NBR

Product benefits

- Motor absolutely watertight, also in the event of damage to the cable sheath and core insulation, with individually stripped, tinned and resin-sealed conductors
- Highest operating reliability with optimum motor selection for operating mode S1, thermal class F, explosion-proof variant in Ex d IIB T4 Gb
- Motor protected by double winding temperature monitoring, which enables automatic operation, even where explosion protection requirements have to be met
- Long service life with shaft made of corrosion-resistant stainless steel
- Zero maintenance, ideal for continuous duty, with long-life bearings sealed on both sides, grease-packed for life
- Environmentally friendly, non-toxic, food-approved oil fill for lubricating the mechanical seal (liquid reservoir)
- Significant reduction of energy costs by optimised hydraulic system and high efficiency
- Absolutely reliable and non-clogging design with optimised cutter (S impeller).
- Close-coupled pump design prevents risk of leakage (pump volute casing and motor housing cast as a single piece)
- Stationary pump sets easy to install and remove with automatic, bolt-free connection; leakage prevented by elastic sealing elements
- Ease of service with wetted bolts made of stainless steel, which are easy to undo even after years of operation
- Double safety provided by a shaft seal ring (drive end) and a bi-rotational mechanical seal (pump end), whose oil reservoir is filled with environmentally friendly oil

Certifications

Overview

Label	Effective in:	Comment
CE	Europe	Suitable for plants to Standard EN 12050-1
LGA Type-tested and monitored guaranteed with tested quality	Europe	Amarex N DN 32 No.: 7381257-01 z

Programme overview / selection tables

Table of fluids handled

The table below for your guidance is based on KSB's long-standing experience. The data are standard values and are not to be considered as generally binding recommendations. More detailed advice is available from our specialist department. Make use of our laboratory's expertise when selecting materials.

Selection aid for materials and hydraulic systems per fluid

Fluid handled[1]	Recommended material	Recommended impeller type	Comments, further recommendations
Grey water	EN-GJL-250	S	Free passage > any solids contained, possibly pre-screened
Waste water			
▪ Waste water or grey water containing long fibres	EN-GJL-250	S	Free passage > any solids contained, possibly pre-screened

Overview of product features

Standard designs

Size	S impeller
	Amarex N S 32-160
Material variant	G
Number of motor poles	
2-pole	32-160/...
Explosion protection	
Motor version UL	Non-explosionproof
Motor version YL[2]	Ex d IIB T4 Gb
Motor	
Starting method	DOL[3]
Voltage	400 V
Cooling	Cooled by surrounding fluid
Mode of operation	S1: submerged (25 m max.) (see [2] in outline drawing) S3: outside the fluid (see [1] in outline drawing)
Power cable	
Type	Rubber-sheathed cable (H07RN8-F 7G1.5²)
Length	10 m
Cable entry	Absolutely watertight
Sealing elements	
Shaft seal	Mechanical seal + shaft seal ring
Elastomer seals	NBR
Monitoring equipment	
Winding temperature motor version UL	Temperature monitoring circuit (with automatic reset and start-up): bimetal switch directly connected with the control circuit of the motor
Winding temperature motor version YL	Temperature monitoring circuit (with automatic reset and start-up): bimetal switch directly connected with the control circuit of the motor contactor Limiting circuit (temperature limit for explosion protection without automatic reset): bimetal switch connected via a tripping unit with manual reset
Coating	Environmentally friendly KSB top coat (two-component epoxy paint), colour RAL 5002, film thickness = 80 µm
Installation	
Stationary, with guide hoop	Installation depths 1.5 m/1.8 m/2.1 m
Stationary, with single guide rail	Installation depth 4.5 m
Stationary, with twin guide rail	Installation depth 4.5 m
Stationary, with guide wire	Installation depth 4.5 m

1) For any fluids which are not listed in this table contact KSB.
2) In countries stipulating explosion-proof units for handling sewage with faeces, motor version YL must be used.
3) Maximum switching frequency: 30 starts per hour

Size	S impeller
	Amarex N S 32-160
Material variant	G
Transportable	Installation depth 4.5 m
Maximum temperature of fluid handled	
Motor version UL	40 °C
Motor version YL	40 °C

Technical data

Impeller Ø	Size	Motor version	P_1	P_2	I_N	I_A	Fluid temperature	[kg]	Mat. No.
			[kW]	[kW]	[A]	[A]	[°C]		
160	S 32-160/002 (cable length 10 m)	YL	2,05	1,50	3,40	18,2	40	29	39190481
160	S 32-160/002 (cable length 10 m)	YL	2,05	1,50	3,40	18,2	40	29	39100380
160	S 32-160/002 (cable length 20 m)	UL	2,05	1,50	3,40	18,2	40	33	39190252

Characteristic curves

Amarex N S 32-160, n = 2900 rpm

Characteristic curves to ISO 9906 Class 2A / 3B, below 10 kW to § 4.4.2. The curves refer to the effective motor speed.

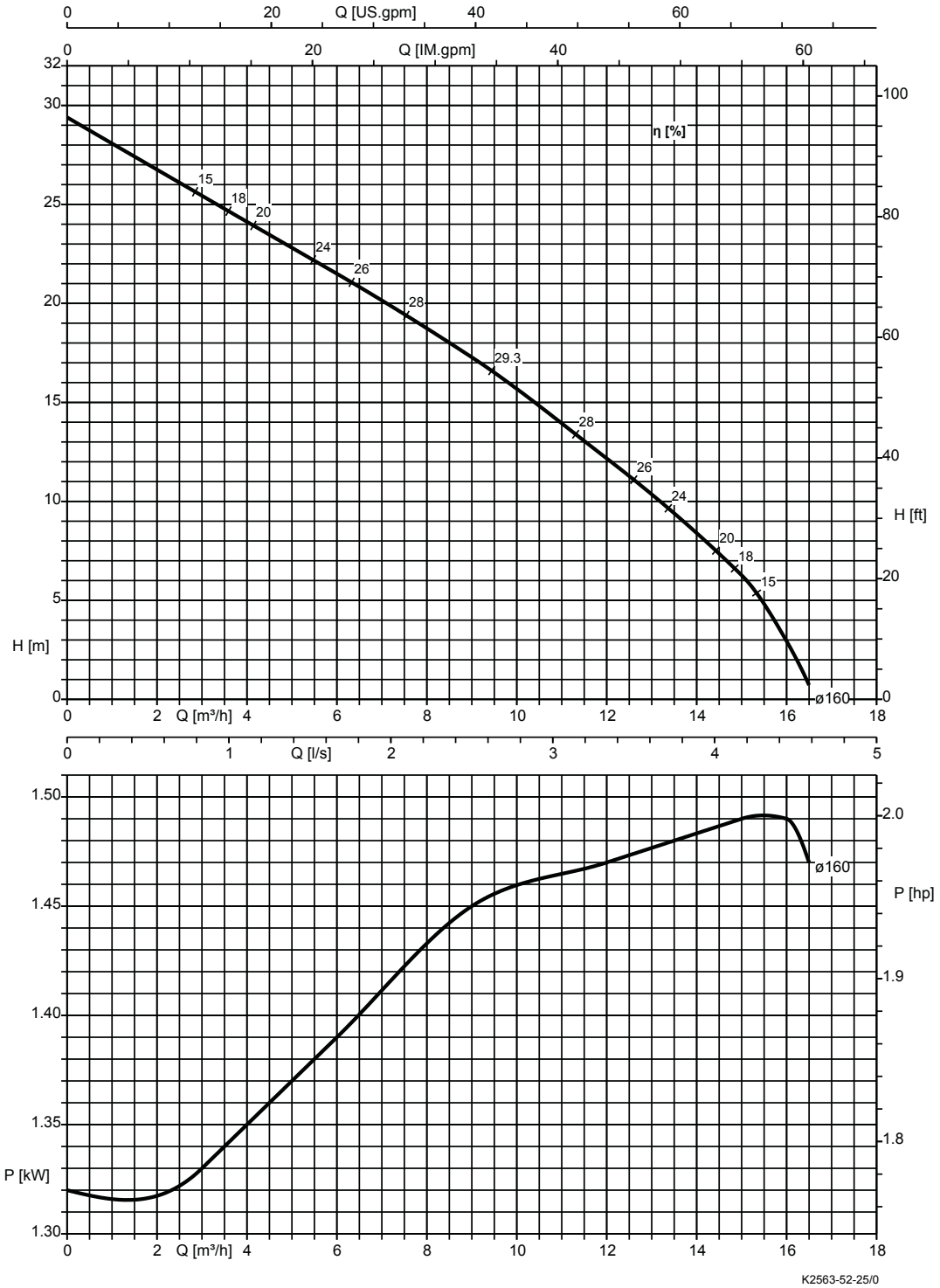

Free passage = 6 mm

Dimensions and connections

Connections

Discharge line connections at the flanged duckfoot bend[4)]

Flanged connection (DN 32/DN 50)	Threaded connection in the flange (DN 32/DN 50)	Clamped connection (DN 32/DN 50)
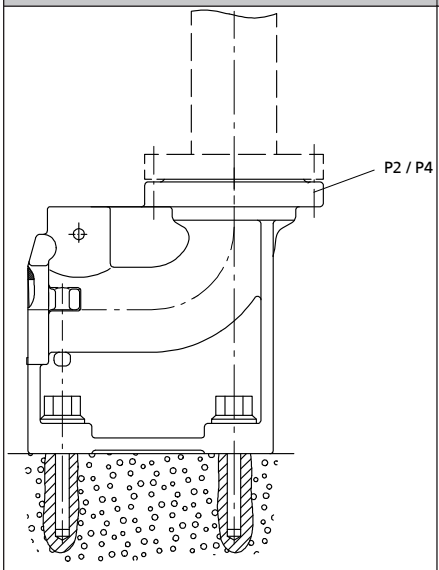	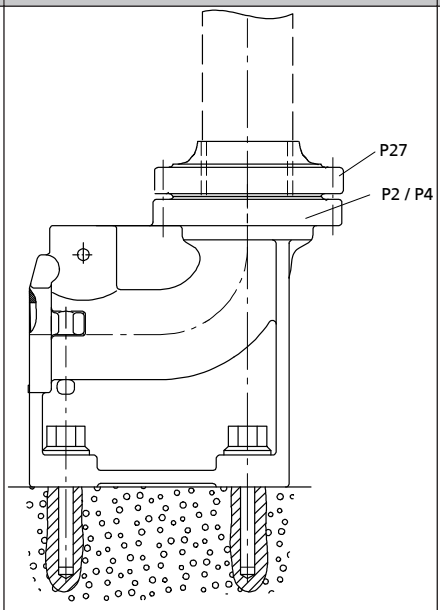	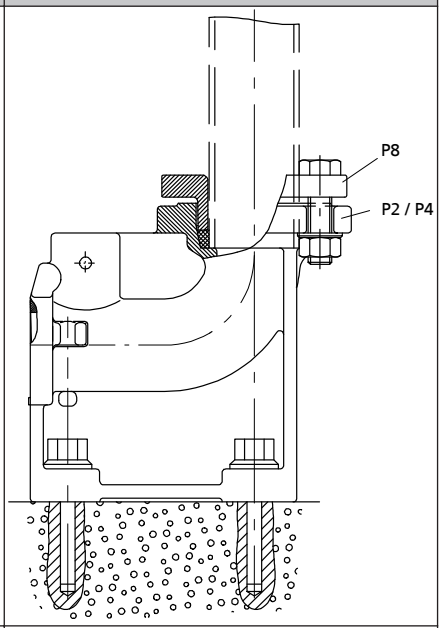
	For standard pipes to DIN 2440 / DIN 2441 ▪ With outside diameter of 60.3 mm, steel for DN 50 ▪ With outside diameter of 63 mm, PVC (ISO 3606) for DN 50 ▪ With threaded connection DN 50 - G2″	For standard pipes to DIN 2440 / DIN 2441 / DIN 2448 ▪ With outside diameter of 60.3 mm, steel for DN 50 ▪ With outside diameter of 63 mm, PVC (ISO 3606) for DN 50

4) Amarex N S 32 is mounted on a DN 50 flanged duckfoot bend.

Dimensions

Amarex N S 32 - transportable version

Transportable version

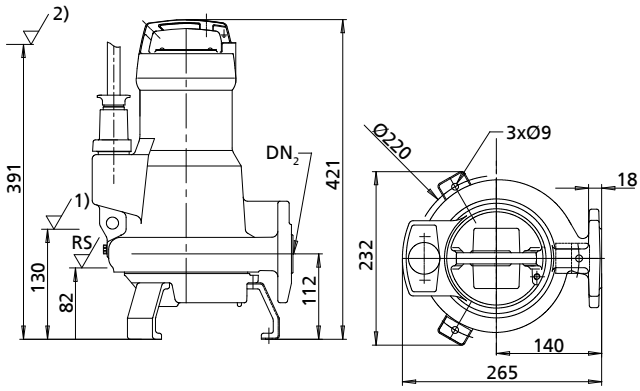

Pump flange DN₂

ISO 7005 DN 32 PN 6
ISO 7005 DN 32 PN 10-PN 16
DIN 2501 DN 32 PN 6
DIN 2501 DN 32 PN 10-PN 16

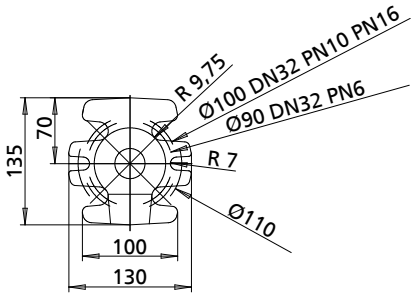

1)	Lowest switch-off point for automatic operation
2)	Minimum submergence for continuous operation
RS	Lowest switch-off point for slurp mode

Amarex N S 32, stationary model with guide wire, single guide rail and guide hoop arrangement, straight claw

Guide wire arrangement

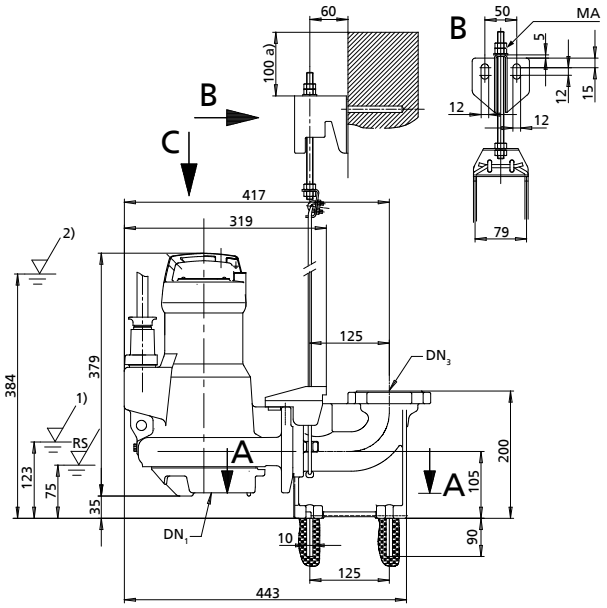

Single guide rail arrangement

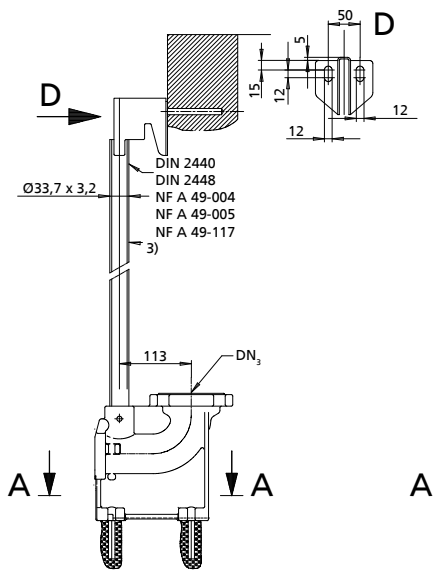

Guide hoop arrangement

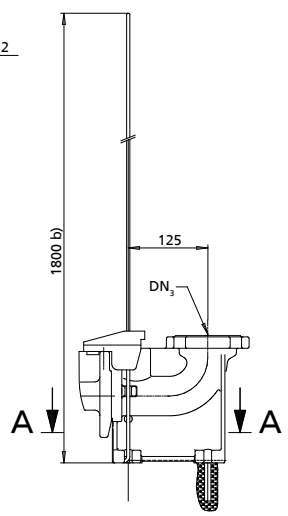

Installation in the sump

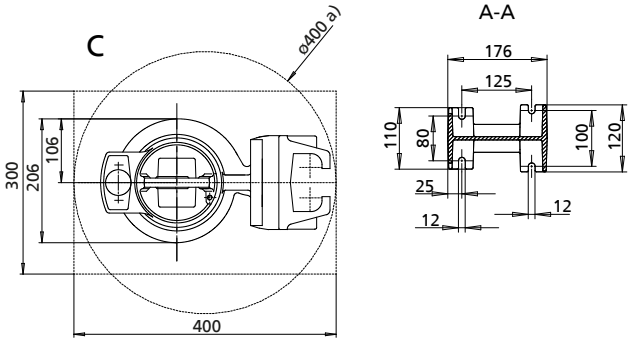

Clamped connection

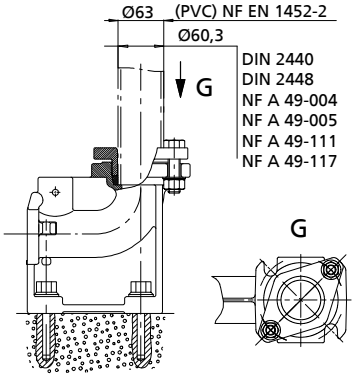

Elbow flange DN_3

ISO 7005 PN 10 - PN 16
DIN 2501 PN 10 - PN 16
ASME 150 2″
ASME B16.1 class 125

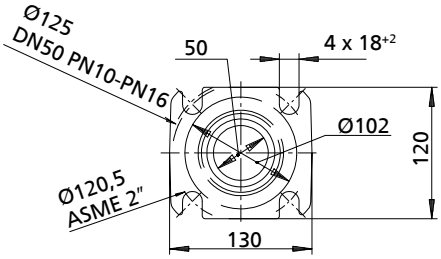

1)	Lowest switch-off point for automatic operation	2)	Minimum submergence for continuous operation
3)	Not included in KSB's scope of supply	a)	Minimum
b)	Maximum	RS	Lowest switch-off point for slurp mode
MA	MA = 14 Nm P = 6000 N		

Amarex N S 32, stationary model with guide wire, single guide rail, twin guide rail and guide hoop arrangement, inclined claw

Guide wire arrangement

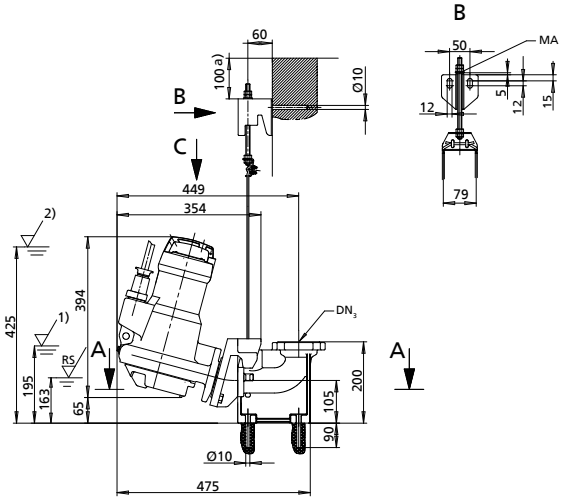

Single guide rail arrangement

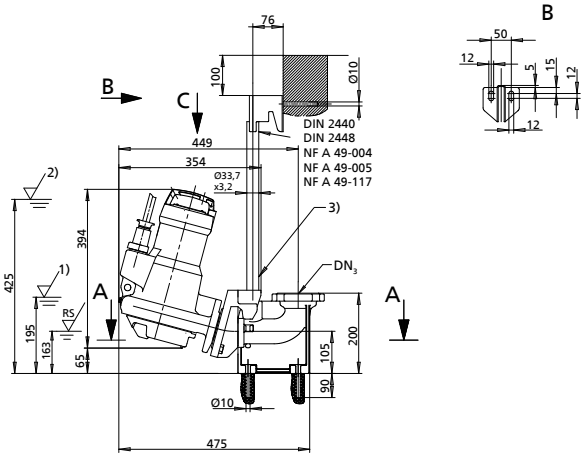

Guide hoop arrangement

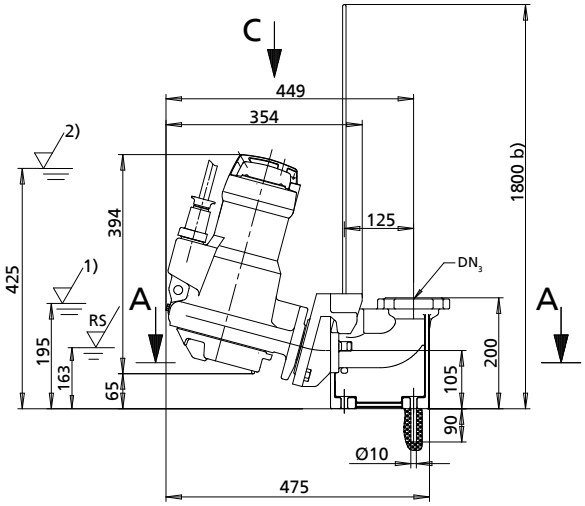

Twin guide rail arrangement

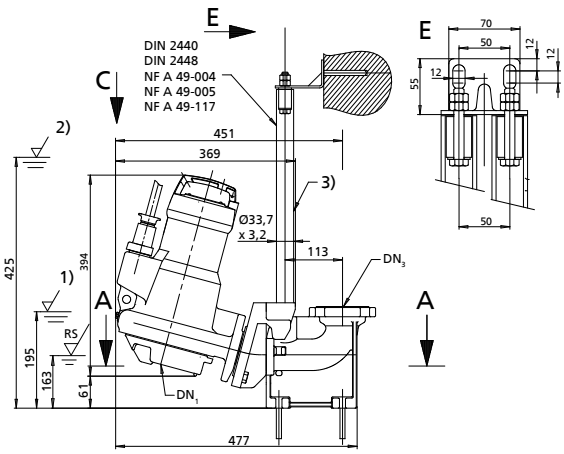

Installation in the sump

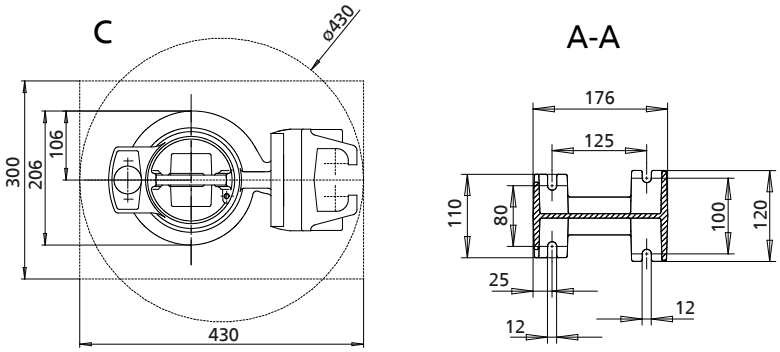

Elbow flange DN3

ISO 7005 DN 50 PN 10 - PN 16
DIN 2501 DN 50 PN 10 - PN 16
ASME 150 2"
ASME B16.1 class 125

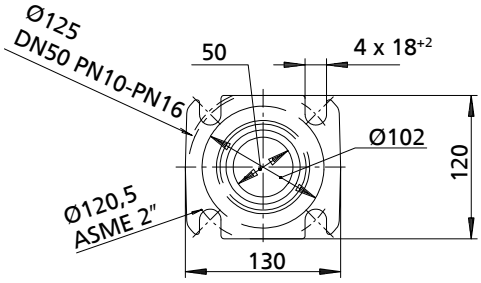

1)	Lowest switch-off point for automatic operation	2)	Minimum submergence for continuous operation
3)	Not included in KSB's scope of supply	MA	MA = 14 Nm P = 6000 N
RS	Lowest switch-off point for slurp mode	a)	Minimum
b)	Maximum		

Installation types

Overview of installation types

Installation type S - stationary wet installation

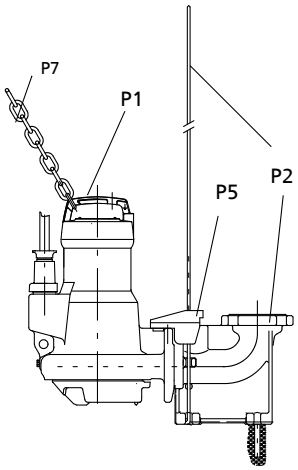

Guide hoop arrangement

P1: pump
P2: installation parts for guide hoop arrangement (ID[5] = 1.5 m / 1.8 m / 2.1 m)
P5: claw
P7: chain and shackle (length = 2 m)

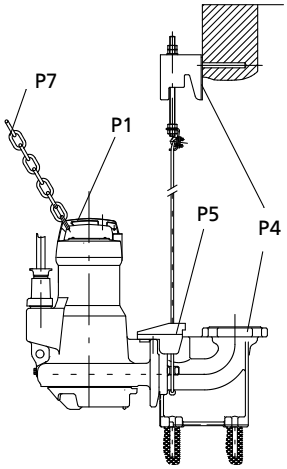

Guide wire arrangement

P1: pump
P4: installation parts for guide wire arrangement (ID[5] = 4.5 m)
P5: claw
P7: chain and shackle (length = 5 m)

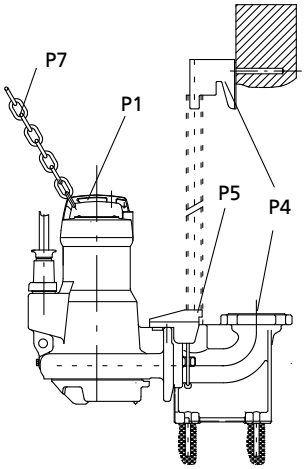

Single guide rail arrangement

P1: pump
P4: installation parts for single guide rail arrangement
P5: claw
P7: chain and shackle (length = 5 m)

Installation type P - transportable wet installation

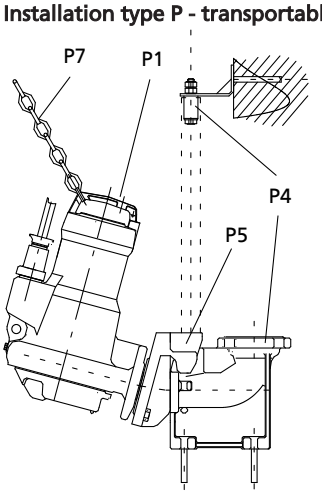

Twin guide rail arrangement

P1: pump
P4: installation parts for twin guide rail arrangement
P5: claw and adapter
P7: chain and shackle (length = 5 m)

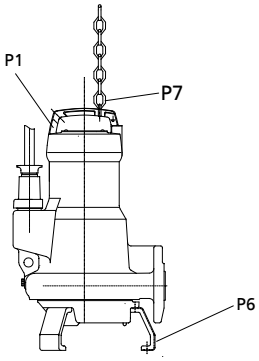

P1: pump
P6: feet
P7: chain and shackle (length = 5 m)

5) ID= installation depth from the lower edge of the access opening to the bottom of the pump sump

Installation information

Suggested installation layouts for transportable pump sets

Size 32

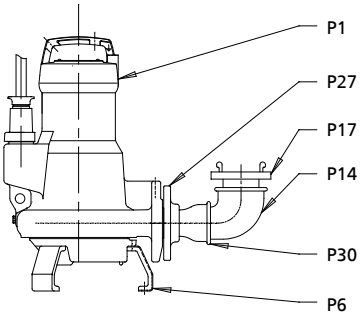

Suggestion 1
Vertical hose connection with elbow (P14) and Storz rigid coupling (P17) (quick connection)

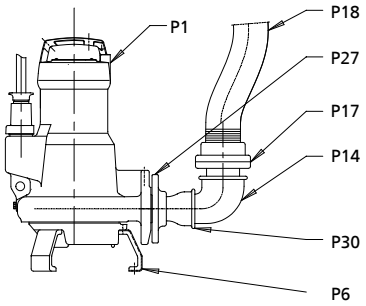

Suggestion 2
Vertical hose connection with plastic hose (P18)

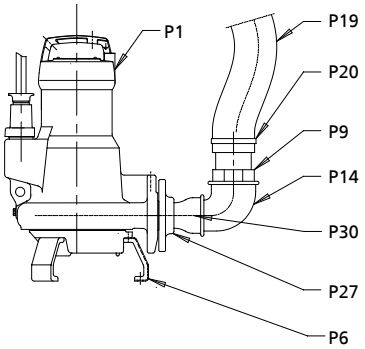

Suggestion 3
Vertical hose connection with plastic hose (P19), hose clip (P20) and adapter (P9)

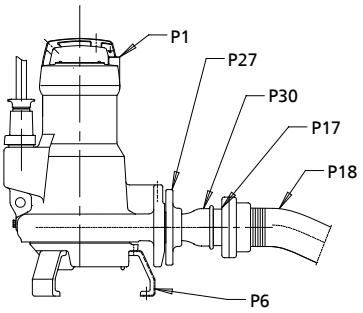

Suggestion 4
Horizontal hose connection with plastic hose (P18)

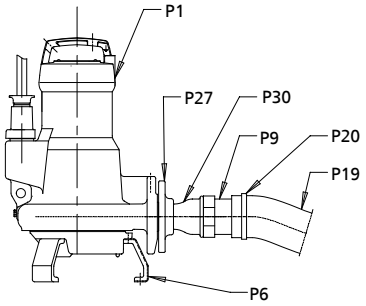

Suggestion 5
Horizontal hose connection with plastic hose (P19), hose clip (P20) and adapter (P9)

P1 to P27 (⇨ Page 18)

Suggested installation layouts for stationary pump sets

Size 32

Guide hoop arrangement
Amarex N S 32-160

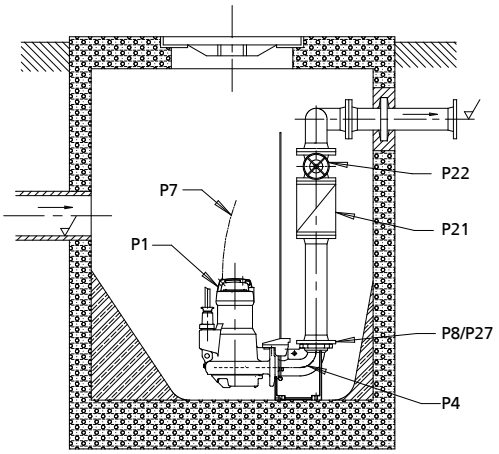

Suggestion 1
Single-pump station for 1.5 m installation depth
Flanged duckfoot bend

Suspended installation
Amarex N S 32-160

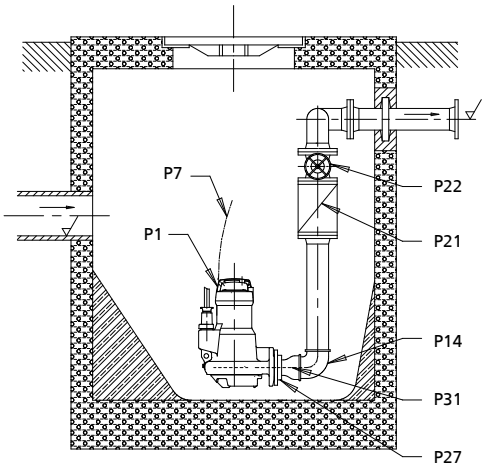

Suggestion 2
Single-pump station
Direct connection to discharge pipe (suspended installation)

Guide wire, single guide rail or twin guide rail arrangement
Amarex N S 32

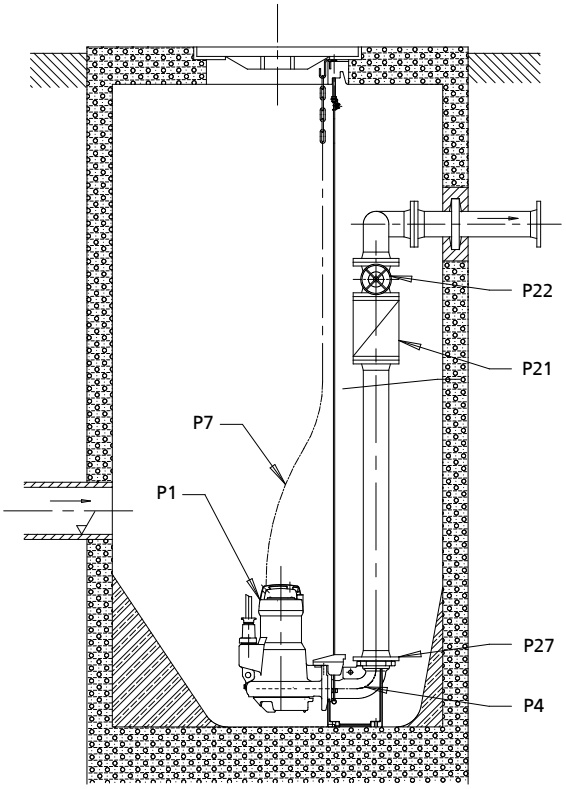

Suggestion 3
Either with guide wire, single guide rail or twin guide rail arrangement
Single-pump station for 4.5 m installation depth
Flanged duckfoot bend

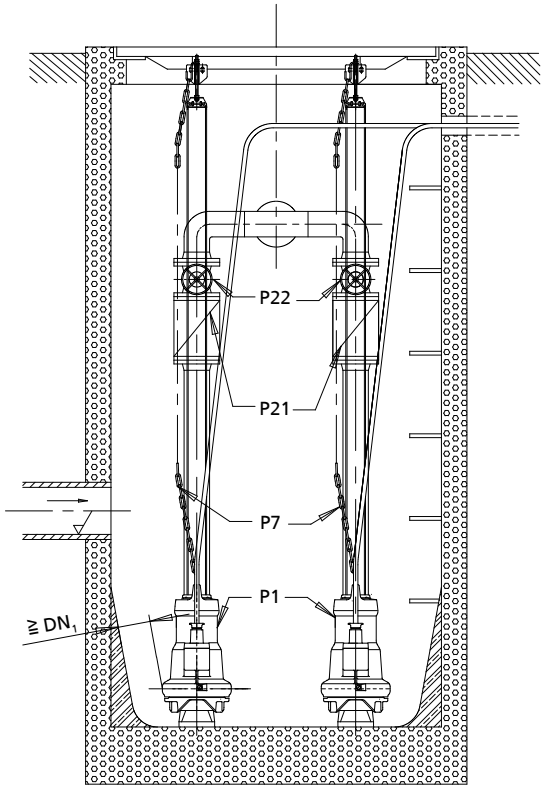

Suggestion 4
Either with guide wire, single guide rail or twin guide rail arrangement
Dual-pump station for 4.5 m installation depth
Flanged duckfoot bend

Dimensions

Guide wire, single guide rail or twin guide rail arrangement
Amarex N S 32

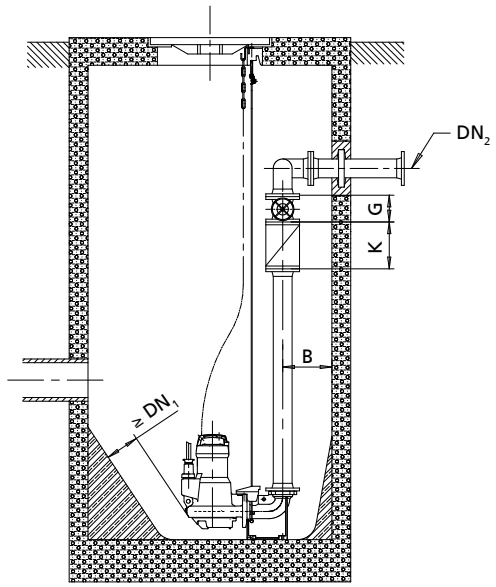

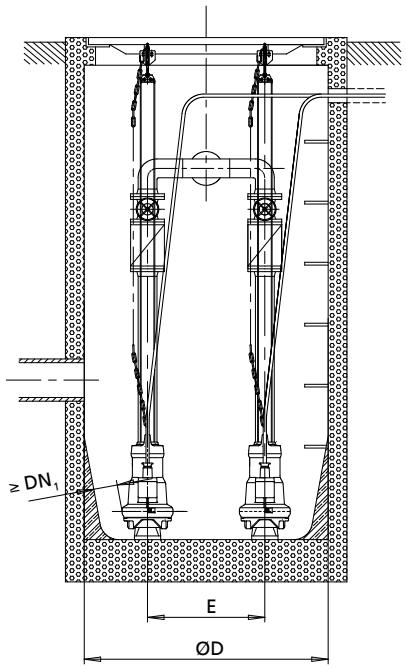

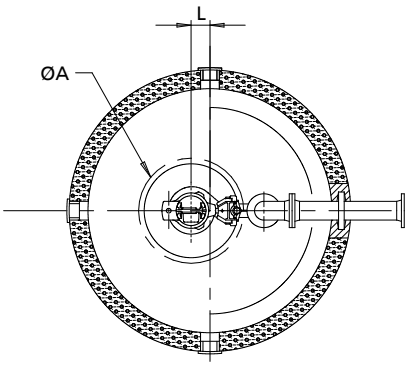

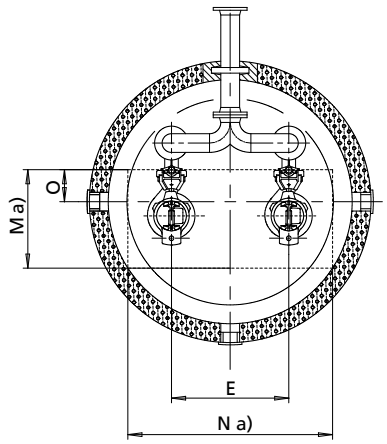

Single-pump station for 4.5 m installation depth
Flanged duckfoot bend

Dual-pump station for 4.5 m installation depth
Flanged duckfoot bend

a)	Minimum

Dimensions [mm]

Amarex N		Ø A	B	Ø D	E	G	K	L	M	N	O	DN_1	DN_2
S 32-160	1 pump	430	165	800	-	75	150	57	-	-	-	32	50
	2 pumps	-	165	800	300	75	150	57	400	600	151	32	50

Suggested electrical installation layouts

Amarex N S 32 is available in explosion-proof design.

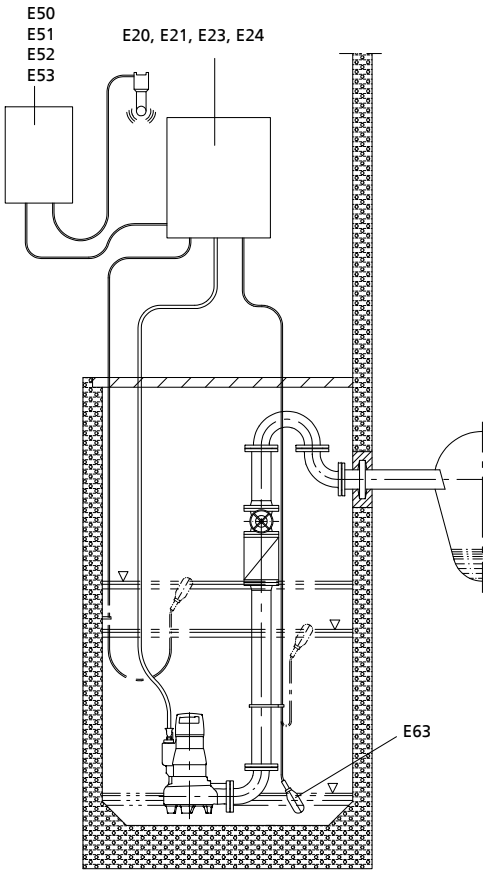

Scope of supply

Stationary wet-installed model (installation type S)

- Pump set, complete with power cable
- Claw with sealing element (O-ring) and mounting elements
- Lifting rope/lifting chain[6)]
- Mounting bracket with mounting elements
- Duckfoot bend with mounting elements
- Guiding accessories
  (guide rails are not included in KSB's scope of supply)

Transportable wet-installed model (installation type P)

- Pump set, complete with power cable
- Feet (and foot plate, if applicable)
- Lifting rope/lifting chain[7)]

6) Optional
7) Optional

Accessories

Installation parts for stationary pump sets

Overview of installation parts for stationary installation

	Item	Description	Sizes	Connection/ installation depth	Mat. No.	[kg]
Guide hoop arrangement						
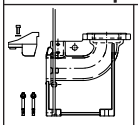	P2 + P5	Installation parts for stationary wet installation (guide hoop arrangement) Consisting of: DN 50 flanged duckfoot bend, stainless steel anchor bolts, guide rail, claw with stainless steel screws/bolts	Amarex DN 32, DN 50 - DN 3: DIN ISO ASME straight claw	Inst. depth 1.5 m	39022210	9
				Inst. depth 1.8 m	39022211	10
				Inst. depth 2.1 m	39022212	11
			Amarex N DN 32, DN 50 - DN 3: DIN ISO ASME inclined claw	Inst. depth 1.5 m	39023102	9
				Inst. depth 1.8 m	39023103	10
				Inst. depth 2.1 m	39023104	11
Guide wire arrangement						
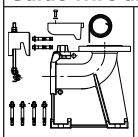	P4 + P5	Installation parts for stationary wet installation, installation depth 4.5 m (guide wire installation) Consisting of: flanged duckfoot bend, stainless steel anchor bolts, suspension bracket, mounting bracket, 10 m guide wire, claw with stainless steel screws/bolts	Amarex N straight claw	DN 32, DN 50 - DN 3: DIN ISO ASME	39022196	13
			Amarex N inclined claw	DN 32, DN 50 - DN 3: DIN ISO ASME	39023105	18
Single guide rail arrangement						
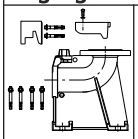	P4 + P5	Installation parts for wet-installed stationary pump sets (single guide rail arrangement) for installation depth = 4.5 m Consisting of: flanged duckfoot bend, stainless steel anchor bolts, mounting bracket, claw with stainless steel screws/ bolts (guide rail not included in KSB's scope of supply)	Amarex N straight claw	DN 32, DN 50 - DN 3: DIN ISO ASME	39022204	12.5
			Amarex N inclined claw	DN 32, DN 50 - DN 3: DIN ISO ASME	39023107	18.5
Twin guide rail arrangement						
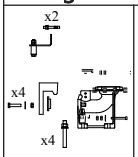	P4 + P5	Installation parts for stationary wet installation (twin guide rail arrangement) Consisting of: flanged duckfoot bend, stainless steel anchor bolts, mounting bracket, adapter, claw with stainless steel screws/bolts (guide rails not included in KSB's scope of supply)	Amarex N inclined claw	DN 32, DN 50 - DN 3: DIN ISO ASME	39023002	14
Claw						
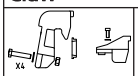	P5	Claw for Amarex N EN-GJL-250 with stainless steel screws/bolts Guide hoop, guide wire and single guide rail arrangements	Amarex N straight claw	DN 32/DN 50	39022248	1.1
			Amarex N inclined claw	DN 32/DN 50	39023108	7
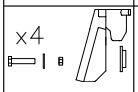	P5	Claw for Amarex N EN-GJL-250 with stainless steel screws/bolts Twin guide rail arrangement	Amarex N inclined claw	DN 32/DN 50	39022990	6
Conversion parts						
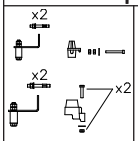		Parts for conversion to twin guide rail arrangement, consisting of: mounting bracket, stainless steel screws/bolts, adapter, anchor bolts Note: required for conversion of guide hoop, guide wire or single guide rail arrangement to twin guide rail arrangement Note: for twin guide rail arrangements a claw is mandatory.		DN 32	39022984	1.4

Installation parts for transportable pump sets

Overview of installation parts for transportable pump sets

	Item	Description	Sizes	Mat. No.	[kg]
	P6	3 feet	Amarex N DN 32	39023085	0.25
		Footplate incl. bolts (only for uneven mounting surfaces and in combination with feet)	Amarex N DN 32	39022262	0.9

Chain for stationary and transportable pump sets

Overview of chains for stationary and transportable pump sets

Item	Description		Sizes	Mat. No.	[kg]
P7	Chain (1.4404) short-linked, tested and duly labelled to Directive 2006/42/EC (Machinery Directive), hook (1.4301), shackle (1.4404) Maximum load: 160 kg	2 m	Amarex N DN 32	39023811	1.2
		3 m	Amarex N DN 32	39023812	1.6
		5 m	Amarex N DN 32	39023813	2.4
		10 m	Amarex N DN 32	39023814	4.4
	Polypropylene lifting rope with shackle 1.4401 and hook 1.4571[8)]	5 m	Amarex N DN 32	39021975	2.5

Pump accessories

Overview of accessories for stationary and transportable pump sets

	Item	Description		Connection	Mat. No.	[kg]
	P8	Flange for pipe coupling PN 10, at the flanged elbow, mating dimensions to PN 16		DN 50/R2	19551111	1.2
	P9	PVC adapter for hose connection, with 1 hose clip, plastic hose of inside diameter 63 item 19		R2	11191498	0.3
	P14	Elbow with internal thread/external thread (to be used for flange connection item 27 and item 30), galvanised grey cast iron		R2	00241966	0.3
	P17	Storz rigid coupling with external thread to DIN ISO 228/1		C 52/G 2 A	00524370	0.2
	P18	Plastic hose DN 50, DIN 14811, with integrated C couplings		C 52	00522262	2.3
				C 52	00522263	4.2
				C 52	00522264	5.7
	P19	Plastic hose without coupling, DIN 14 811	63	5	39018688	1.7
				10	39018689	3.4
				20	39018690	6.8
	P20	Hose clip DIN 3017, chrome steel		B 50[9)]	39000515	0.025
	P21	RK swing check valve Plastic, EN 12 050-4, with internal thread ISO 7/1, full port and drain plug; cannot be used for pumped drainage		Rp 2	01009773	0.5

8) Increase quantity for larger installation depths.
9) For plastic hose Ø 63 item 19

	Item	Description	Connection	Mat. No.	[kg]
	P22	Socket gate valve CuZn PN 10-12 DIN 3352	Rp 2	00411503	1.287
	P27	Threaded flange for guide hoop arrangement (P2) and guide wire arrangement (P4) Threaded flange PN 40 for pumps, including bolts/screws	DN 32/Rp 1 1/4	39023087	1.7
		Threaded flange for guide hoop arrangement (P2) and guide wire arrangement (P4) Threaded flange PN 16/2" ISO DIN 2564 Consisting of: flange, 4 hexagon head bolts with nuts and washers and 1 sealing element	DN 50/Rp 2	19551353	2
	P28	Hand pump, wall mounting, grey cast iron, suction-side connection Rp 1 1/2		00520485	12
	P30	Adapter with reduced external thread M4 EN 1042K	2 x 1 1/4	01135663	0.4

Electrical accessories

Control units, non-ATEX compliant

Valid for all countries except France.
Control units for Amarex N without ATEX

Item	Description	Power min [A]	Power max [A]	Type	Mat. No.	[kg]
E4	Multi-functional plug, type Hyper, with motor protection relay CEE plug	2,6	3,7	Hyper 37.1	19071492	1
		3,7	5,5	Hyper 55.1	19071493	1
		5,5	8,0	Hyper 80.1	19071494	1
		8,0	11,5	Hyper 115.1	19071495	1
	LevelControl Basic 2 control unit for single-pump station, IP 54					
E11	For float switch or 4...20 mA sensor, optional master switch, 400 x 281 x 135 mm	2,5	4,0	BC1 400 DFNO 040	19073763	4.5
		4,0	6,3	BC1 400 DFNO 063	19073764	4.5
		6,3	10,0	BC1 400 DFNO 100	19073765	4.5
E14	Pneumatic, optional master switch, 400 x 281 x 135 mm	2,5	4,0	BC1 400 DPNO 040	19073768	4.5
		4,0	6,3	BC1 400 DPNO 063	19073769	4.5
		6,3	10,0	BC1 400 DPNO 100	19073770	4.5
E17	Bubbler control, with master switch, 400 x 300 x 155 mm	2,5	4,0	BS1 400 DLNO 040	19073818	12
		4,0	6,3	BS1 400 DLNO 063	19073819	12
		6,3	10,0	BS1 400 DLNO 100	19073820	12
E19	Bubbler control for BC version Only to be used for connections with neutral conductors! Optional component O1 (master switch) not possible! 400 x 281 x 135 mm	2,5	4,0	BC1 400 DLNO 040	19075148	4.5
		4,0	6,3	BC1 400 DLNO 063	19075149	4.5
		6,3	10,0	BC1 400 DLNO 100	19075150	4.5
	LevelControl Basic 2 control unit for dual-pump station, IP 54					
E 31	For float switch or 4...20 mA sensor, optionally with master switch, 400 x 281 x 135 mm	2,5	4,0	BC2 400 DFNO 040	19073777	4.7
		4,0	6,3	BC2 400 DFNO 063	19073778	4.7
		6,3	10,0	BC2 400 DFNO 100	19073779	4.7
E34	Pneumatic, optional master switch, 400 x 281 x 135 mm	2,5	4,0	BC2 400 DPNO 040	19073782	4.7
		4,0	6,3	BC2 400 DPNO 063	19073783	4.7
		6,3	10,0	BC2 400 DPNO 100	19073784	4.7
E37	Bubbler control, with master switch, 400 x 300 x 155 mm	2,5	4,0	BS2 400 DLNO 040	19073860	13
		4,0	6,3	BS2 400 DLNO 063	19073861	13
		6,3	10,0	BS2 400 DLNO 100	19073862	13
E39	Bubbler control for BC version Only to be used for connections with neutral conductors! Optional component O1 (master switch) not possible! 400 x 281 x 135 mm	2,5	4,0	BC2 400 DLNO 040	19075151	4.7
		4,0	6,3	BC2 400 DLNO 063	19075152	4.7
		6,3	10,0	BC2 400 DLNO 100	19075153	4.7

Only valid for France!
Control units for Amarex N without ATEX

Item	Description	Power min [A]	Power max [A]	Type	Mat. No.	[kg]
E4	Multi-functional plug, type Hyper, with motor protection relay CEE plug	2,6	3,7	Hyper 37.1	19071492	1
		3,7	5,5	Hyper 55.1	19071493	1
		5,5	8,0	Hyper 80.1	19071494	1
		8,0	11,5	Hyper 115.1	19071495	1
	LevelControl Basic 2 control unit for single-pump stations					
E11	For float switch or 4...20 mA sensor, with master switch, 400 x 278 x 120 mm	2,5	4,0	BC1 400 DFNO 040 02	19073878	4.5
		4,0	6,0	BC1 400 DFNO 063 02	19073879	4.5
		6,0	10,0	BC1 400 DFNO 100 02	19073880	4.5
E14	Pneumatic, with master switch, 400 x 278 x 120 mm	2,5	4,0	BC1 400 DPNO 040 02	10)	10)
		4,0	6,3	BC1 400 DPNO 063 02	10)	10)
		6,3	10,0	BC1 400 DPNO 100 02	10)	10)
E17	Bubbler control, with master switch, 400 x 300 x 155 mm	2,5	4,0	BS1 400 DLNO 040 02	10)	10)
		4,0	6,3	BS1 400 DLNO 063 02	10)	10)
		6,3	10,0	BS1 400 DLNO 100 02	10)	10)

10) See KSB Easy Select

Item	Description	Power min [A]	Power max [A]	Type	Mat. No.	[kg]
	LevelControl Basic 2 control unit for dual-pump stations					
E11	For float switch or 4...20 mA sensor, optional master switch, 400 x 278 x 120 mm	2,5	4,0	BC2 400 DFNO 040 02	19073888	4.7
		4,0	6,3	BC2 400 DFNO 063 02	19073889	4.7
		6,0	10,0	BC2 400 DFNO 100 02	19073890	4.7
E14	Pneumatic, with master switch, 400 x 278 x 120 mm	2,5	4,0	BC2 400 DPNO 040 02	10)	10)
		4,0	6,3	BC2 400 DPNO 063 02	10)	10)
		6,3	10,0	BC2 400 DPNO 100 02	10)	10)
E17	Bubbler control, with master switch, 400 x 300 x 155 mm	2,5	4,0	BS2 400 DLNO 040 02	10)	10)
		4,0	6,3	BS2 400 DLNO 063 02	10)	10)
		6,3	10,0	BS2 400 DLNO 100 02	10)	10)

Alarm switchgears for pumps without ATEX

AS 0/AS 1/AS 2/AS 4/AS 5

	Item	Description	Mat. No.	[kg]
	E50	Alarm switchgear AS 0 With circuit breaker, acoustic signal transmitter with 85 dB(A), green equipment-on lamp Plastic housing IP20, 140 x 80 x 57 mm. Use float switch, F1 moisture sensor (item E64), M1 alarm contactor or signal relay of control unit as contactor.	29128401	0.5
	E51	Alarm switchgear AS 2 With circuit breaker, acoustic signal with 85 dB(A), green equipment-on lamp, volt-free contact for hook-up to a control station Plastic housing IP 20, 140 x 80 x 57 mm. Use float switch, F1 moisture sensor (item E 64) or signal relay of control unit as contactor.	29128422	0.5
	E52	Alarm switchgear AS 4 With circuit breaker, acoustic signal transmitter with 85 dB(A), green equipment-on lamp, volt-free contact for hook-up to a control station, self-charging power supply unit for 5 hours of operation in the event of a power failure Plastic housing IP20, 140 x 80 x 57 mm. Use float switch (E60), F1 moisture sensor (item E64) or signal relay of control unit as contactor.	29128442	0.5
	E53	Alarm switchgear AS 5 Mains-independent, with self-charging power supply unit for 10 hours of operation in the event of a power failure, mains pilot LED, fault indicator light, horn-off push button, volt-free contact for hook-up to a control station, ready for connection with 1.8 m connection cable and plug. ISO housing IP41, 190 x 165 x 75 mm. Use float switch (E60) or signal relay of control unit as contactor.	00530561	1.7
	E55	Alarm switchgear AS 1 In IP30 ISO plug housing, mains-independent, with self-charging power supply unit for 5 hours of operation in the event of a power failure, acoustic signal transmitter 70 dB(A) with circuit breaker and integrated signal transmitter with 3-metre connection cable, max. 60 °C, not suitable for steam and condensate. 1. High water alert by suspending the moisture sensor in a (pump) sump above the pump start-up point. 2. Water alarm signal at a water level of only 1 mm (!), by placing the contactor on the floor of rooms at risk of flooding, e.g. the cellar or next to the washing machine in the kitchen or bathroom.	00533740	0.9

Accessories for non-ATEX control units

Overview of control unit accessories for Amarex N, non-ATEX compliant

	Item	Description		Mat. No.	[kg]
	E60	Float switch with free cable end (NO contact) Switch housing made of polypropylene (max. fluid temperature 70 °C), circuit closed in upper float position, connection cable (H07RN-F3G1)	3 m	11037742	0.5
			5 m	11037743	0.8
			10 m	11037744	1.3
			15 m	11037745	1.8

	Item	Description		Mat. No.	[kg]
			20 m	11037746	2.4
			25 m	11037747	2.9
			30 m	11037748	3.4
	E62	Float switch with free cable end (NC contact), Circuit open in upper float position, power cable (H07RN-F 3G1)	5 m	11037756	0.8
			10 m	11037757	1.4
			20 m	11037758	2.6
	E64	Leakage sensor F 1	3 m	19072366	0.2
	E65	Open pressure bell set - pneumatic and bubbler control with polyamide tube 8 x 1 mm	Tube length 10 m	19071721	1.2
			Tube length 20 m	19071837	2
			Tube length 50 m	19074200	2.5
	E66	Closed pressure bell set - pneumatic with polyamide tube 8 x 3 mm	Tube length 10 m	19071722	3.5
			Tube length > 10 m		
	E70	Horn, 12 V DC, 105 dB, 150 mA, IP54, with 0.45 m connection cable		01086547	0.1
	E71	Alarm combination, 12 V DC		01139930	0.1
	E72	Yellow alarm strobe light, 12 V DC, 195 mA, IP65		01056355	0.3
	E73	PC service tool		47121210	0.2
	E90	Rechargeable battery retrofit kit for LevelControl Basic 2. Powers the electronics, float switches, level sensor(s) or the internal pressure sensor and the alarm equipment (buzzer, horn, alarm combination), for single-pump and dual-pump stations.	For type BC, includes 2 rechargeable batteries 6 V, 1.3 Ah and charging unit	19074194	0.8
	E91		For type BS, consisting of 1 rechargeable battery 12 V, 1.2 Ah and charging unit	19074199	1

ATEX-compliant control units

The control units are not explosion-proof, which means that they must not be operated in potentially explosive atmospheres.

For ATEX-compliant variants, intrinsic safety barriers and an ATEX level switch (float switch) must be fitted. Selection via KSB EasySelect.

Valid for all countries except France.
Control unit accessories for Amarex N with ATEX

Item	Description	Power min [A]	Power max [A]	Type	Mat. No.	[kg]
	LevelControl Basic 2 control unit for single-pump station					
E20	Float switch, with master switch, 600 x 400 x 200 mm	2,5	4,0	BS1 400 DFEO 040	19073800	12
		4,0	6,3	BS1 400 DFEO 063	19073801	12
		6,3	10,0	BS1 400 DFEO 100	19073802	12
E21	Pneumatic, optional master switch, 400 x 281 x 135 mm	2,5	4,0	BC1 400 DPEO 040	19073771	4.5
		4,0	6,3	BC1 400 DPEO 063	19073772	4.5
		6,3	10,0	BC1 400 DPEO 100	19073773	4.5
E23	Bubbler control, with master switch, 400 x 300 x 155 mm	2,5	4,0	BS1 400 DLEO 040	19073821	12
		4,0	6,3	BS1 400 DLEO 063	19073822	12
		6,3	10,0	BS1 400 DLEO 100	19073823	12
E24	Bubbler control for BC version Only to be used for connections with neutral conductors! Optional component O1 (master switch) not possible! 400 x 281 x 135 mm	2,5	4,0	BC1 400 DLEO 040	19075154	4.5
		4,0	6,3	BC1 400 DLEO 063	19075155	4.5
		6,3	10,0	BC1 400 DLEO 100	19075156	4.5
	LevelControl Basic 2 control unit for dual-pump station					
E40	Float switch, with master switch, 600 x 400 x 200 mm	2,5	4,0	BS2 400 DFEO 040	19073842	13
		4,0	6,3	BS2 400 DFEO 063	19073843	13
		6,3	10,0	BS2 400 DFEO 100	19073844	13
E41	Pneumatic, optional master switch, 400 x 281 x 135 mm	2,5	4,0	BC2 400 DPEO 040	19073785	4.7
		4,0	6,3	BC2 400 DPEO 063	19073786	4.7
		6,3	10,0	BC2 400 DPEO 100	19073787	4.7
E43	Bubbler control, with master switch, 400 x 300 x 155 mm	2,5	4,0	BS2 400 DLEO 040	19073863	13
		4,0	6,3	BS2 400 DLEO 063	19073864	13
		6,3	10,0	BS2 400 DLEO 100	19073865	13
E44	Bubbler control for BC version Only to be used for connections with neutral conductors! Optional component O1 (master switch) not possible! 400 x 281 x 135 mm	2,5	4,0	BC2 400 DLEO 040	19075157	4.7
		4,0	6,3	BC2 400 DLEO 063	19075158	4.7
		6,3	10,0	BC2 400 DLEO 100	19075159	4.7

Only valid for France!
Control unit accessories for Amarex N with ATEX

Item	Description	Power min [A]	Power max [A]	Type	Mat. No.	[kg]
	LevelControl Basic 2 control unit for single-pump stations					
E20	Float switch, with master switch, 600 x 400 x 200 mm	2,5	4,0	BS1 400 DFEO 040 02	11)	11)
		4,0	6,3	BS1 400 DFEO 063 02	11)	11)
		6,3	10,0	BS1 400 DFEO 100 02	11)	11)
E21	Pneumatic, with master switch, 400 x 278 x 120 mm	2,5	4,0	BC1 400 DPEO 040 02	11)	11)
		4,0	6,3	BC1 400 DPEO 063 02	11)	11)
		6,3	10,0	BC1 400 DPEO 100 02	11)	11)
E23	Bubbler control, with master switch, 400 x 300 x 155 mm	2,5	4,0	BS1 400 DLEO 040 02	11)	11)
		4,0	6,3	BS1 400 DLEO 063 02	11)	11)
		6,3	10,0	BS1 400 DLEO 100 02	11)	11)
	LevelControl Basic 2 control unit for dual-pump stations					

11) See KSB Easy Select

Item	Description	Power min [A]	Power max [A]	Type	Mat. No.	[kg]
E40	Float switch, with master switch, 600 x 400 x 200 mm	2,5	4,0	BS2 400 DFEO 040 02	11)	11)
		4,0	6,3	BS2 400 DFEO 063 02	11)	11)
		6,3	10,0	BS2 400 DFEO 100 02	11)	11)
41	Pneumatic, with master switch, 400 x 278 x 120 mm	2,5	4,0	BC2 400 DPEO 040 02	11)	11)
		4,0	6,3	BC2 400 DPEO 063 02	11)	11)
		6,3	10,0	BC2 400 DPEO 100 02	11)	11)
E43	Bubbler control, with master switch, 400 x 300 x 155 mm	2,5	4,0	BS2 400 DLEO 040 02	11)	11)
		4,0	6,3	BS2 400 DLEO 063 02	11)	11)
		6,3	10,0	BS2 400 DLEO 100 02	11)	11)

Accessories for ATEX-compliant control units

Overview of accessories for Amarex N with ATEX

	Item	Description		Mat. No.	[kg]
	E63	Float switch with free cable end (NO contact) With declaration of compliance with explosion protection standards Power cable (H 07 RN-F3G1)	5 m	01148226	0.7
			10 m	01148247	1
			20 m	01148248	2
	E65	Open pressure bell set - pneumatic and bubbler control with polyamide tube 8 x 1 mm	Tube length 10 m	19071721	1.2
			Tube length 20 m	19071837	2
			Tube length 50 m	19074200	2.5
	E66	Closed pressure bell set - pneumatic with polyamide tube 8 x 3 mm	Tube length 10 m	19071722	3.5
			Tube length > 10 m		
	E70	Horn, 12 V DC, 105 dB, 150 mA, IP54, with 0.45 m connection cable, not explosion-proof		01086547	0.1
	E71	Alarm combination, 12 V DC not explosion-proof		01139930	0.1
	E72	Yellow alarm strobe light, 12 V DC, 195 mA, IP65, not explosion-proof		01056355	0.3
	O45	Plastic housing, (W) 82 × (H) 55 × (D) 106.5 [mm], IP65, for easier installation of alarm strobe light, for wall mounting		01061067	0.2
	E73	PC service tool		47121210	0.2
	E90	Rechargeable battery retrofit kit for LevelControl Basic 2. Powers the electronics, float switches, level sensor(s) or the internal pressure sensor and the alarm equipment (buzzer, horn, alarm combination), for single-pump and dual-pump stations.	For type BC, includes 2 rechargeable batteries 6 V, 1.3 Ah and charging unit	19074194	0.8
	E91		For type BS, consisting of 1 rechargeable battery 12 V, 1.2 Ah and charging unit	19074199	1

15.03.2016

2563.51/07-EN

LENNTECH
WATER TREATMENT SOLUTIONS
info@lenntech.com Tel. +31-152-610-900
www.lenntech.com Fax. +31-152-616-289