Submersible Motor Pump

Amaline

Type Series Booklet

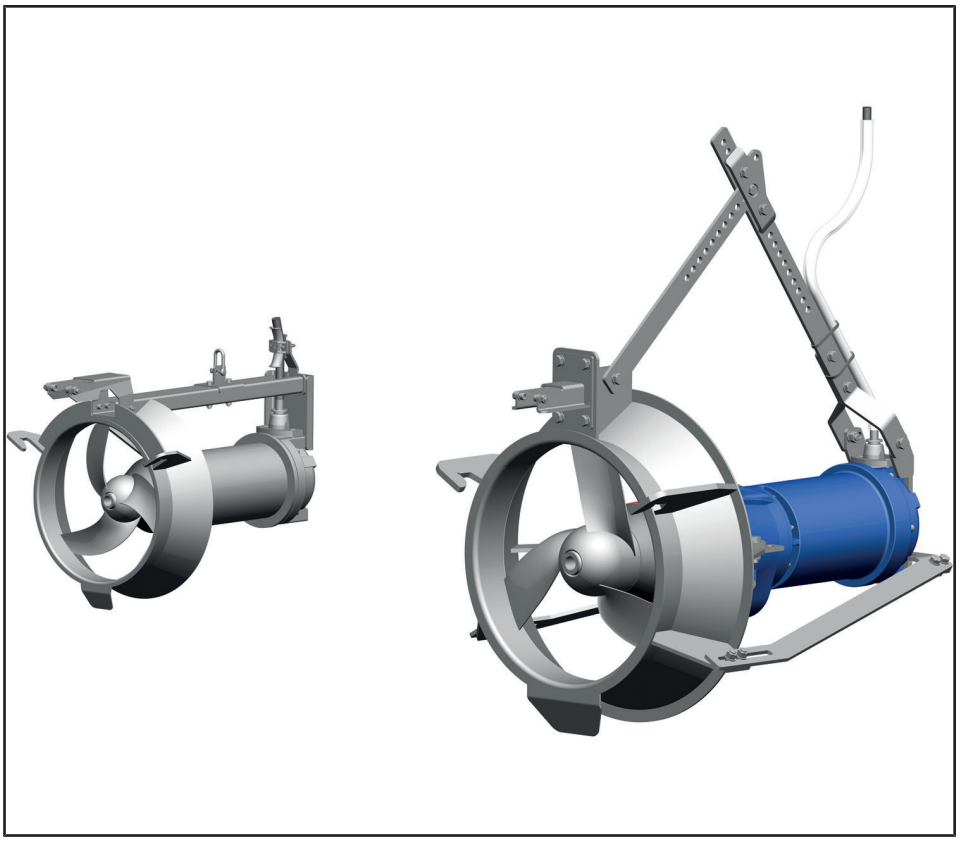

Legal information/Copyright

Type Series Booklet Amaline

All rights reserved. The contents provided herein must neither be distributed, copied, reproduced, edited or processed for any other purpose, nor otherwise transmitted, published or made available to a third party without the manufacturer's express written consent.

Subject to technical modification without prior notice.

© KSB SE & Co. KGaA, Frankenthal 2024-06-25

Contents

Waste Water **4**
Submersible Motor Pump 4
Amaline 4
Main applications 4
Fluids handled 4
Operating data 4
Design details 4
Designation 5
Materials 6
Product benefits 7
Product information 7
Product information as per Regulation No. 1907/2006 (REACH) 7
Acceptance tests and warranty 7
Selection information 7
Overview of product features / selection tables 10
Overview of product features 10
Combination of pump and motor: Amaline 200, 300, 400; motor housing made of grey cast iron 12
Combination of pump and motor: Amaline 200, 300, 400; motor housing made of stainless steel 12
Combination of pump and motor: Amaline 500, 600, 800; motor housing made of grey cast iron 13
Standard and special designs 13
Specifications required for enquiries/orders 14
Selection chart 15
Amaline 200/300/400, n = 1450/960/725 rpm, Amaline 500/600/800, n = 729 - 206 rpm 15
Characteristic curves 16
Amaline 202_, motors: 1 4, 2 4 16
Amaline 203_, motors: 2 4 17
Amaline 302_, motors: 0 6, 2 6 18
Amaline 303_, motors: 0 6, 2 6 19
Amaline 303_, motors: 8 6 20
Amaline 402_, motors: 3 8, 4 8 21
Amaline 403_, motors: 3 8, 4 8 22
Amaline 5033- _ _ _, motors: 4 4, 6 4, 11 4 23
Amaline 5035- _ _ _, motors: 17 2, 4 4, 6 4 24
Amaline 6032- _ _ _, motors: 4 4, 6 4, 11 4 25
Amaline 6033- _ _ _, motors: 4 4, 6 4, 11 4 26
Amaline 6035- _ _ _, motors: 17 2, 25 2, 11 4, 16 4 27
Amaline 8032- _ _ _, motors: 4 4, 6 4, 11 4, 16 4, 23 4, 30 4 28
Amaline 8038- _ _ _, motors: 4 4, 6 4, 11 4, 16 4, 23 4, 30 4 29
Dimensions 30
Amaline 200, 300, 400; motor housing made of grey cast iron 30
Amaline 200, 300, 400; motor housing made of stainless steel 32
Amaline 500, 600, 800; motor housing made of grey cast iron 34
Scope of supply 35
Accessories 36
Forcing screws 36
Installation accessories 37
Overview of installation accessories 37
Fastening elements for the guide rail 37
Guide rails 38
Connecting pipe 39
Cable support/carabine hook 40
General arrangement drawings with list of components 41
Amaline 200 (motors: 1 4, 2 4; motor housing made of grey cast iron) 41
Amaline 200 (motors: 1 4, 2 4; motor housing made of stainless steel) 43
Amaline 300 (motors: 0 6, 2 6; motor housing made of grey cast iron) 45
Amaline 300 (motors: 8 6; motor housing made of grey cast iron) 47
Amaline 300 (motors: 0 6, 2 6; motor housing made of stainless steel) 49
Amaline 400 (motors: 3 8, 4 8; motor housing made of grey cast iron) 51
Amaline 400 (motors: 3 8, 4 8; motor housing made of stainless steel) 53
Amaline 500/600/800 (motors: 17 2, 25 2, 4 4, 6 4, 11 4, 16 4, 23 4, 30 4; motor housing made of grey cast iron) 55

Waste Water

Submersible Motor Pump

Amaline

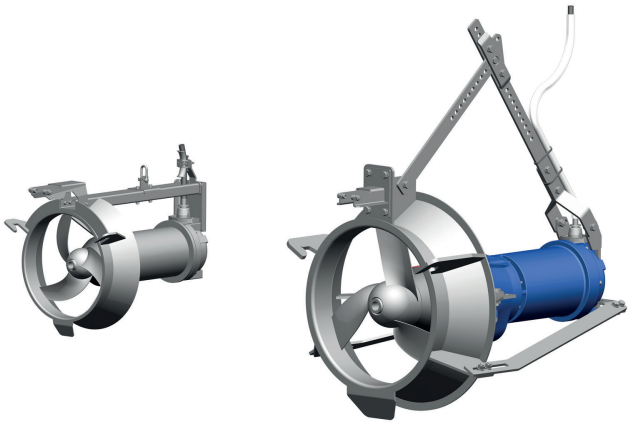

Main applications

- Recirculating activated sludge from the nitrification to the denitrification stage of activated sludge tanks
- Economic handling of stormwater, river water, surface water and polder water at low heads
- Generating flow in water bodies

Fluids handled

- Activated sludge
- Stormwater
- River water
- Polder water
- Surface water

Operating data

Table 1: Operating properties of Amaline 200/300/400 pumps

Characteristic		Amaline 200	Amaline 300	Amaline 400
Power	P [kW]	1,25 - 2,5	1,8 - 7,5	2,5 - 4
Head	H [m]	< 2,5	< 3,4	< 1,2
Flow rate	Q [m³/h]	< 425	< 1200	< 1800
Fluid temperature	T [°C]	< 40	< 40	< 40

Table 2: Operating properties of Amaline 500/600/800 pumps

Characteristic		Amaline 500	Amaline 600	Amaline 800
Power	P [kW]	4,5 - 17	4,5 - 25	4,5 - 27
Head	H [m]	< 3,5	< 3,4	< 1,95
Flow rate	Q [m³/h]	< 2700	< 4700	< 6600
Fluid temperature	T [°C]	< 40	< 40	< 40

Design details

Design

- Fully floodable submersible motor pump
- Horizontal installation
- Wet installation

Axial propeller

- Self-cleaning propeller ECB propeller

Shaft seal

- Two bi-directional mechanical seals in tandem arrangement, with liquid reservoir

Amaline 500, 600, 800:

- Additional leakage chamber between the seat ring holder and the gear unit

Bearings

Amaline 200, 300, 400:

- Grease-packed rolling element bearings sealed for life

Amaline 500, 600, 800:

- Grease-packed rolling element bearings sealed for life in motor
- Oil-lubricated rolling element bearings in gear unit

Drive

- Three-phase asynchronous squirrel-cage motor
- Type of protection Ex db IIB (applies to explosion-proof pump sets only)

Amaline 200, 300, 400:

- Direct drive

Amaline 500, 600, 800:

- Spur gear drive

1594.51/09-EN

Designation

Example: Amaline C 2035 - 1450 / 24 UDG

Table 3: Designation key

Code	Description	
Amaline	Type series	
C	Pump casing material	
	C	Stainless steel
	S	Galvanised steel
20	Size, nominal diameter (DN)	
	20	200
	30	300
	40	400
	50	500
	60	600
	80	800
3	Number of blades	
	2, 3	
5	Code of blade incidence angle	
	1, 2, 3, 4, 5, 6, 8	
1450	Nominal speed of axial propeller [rpm]	
2	Motor size	
	0, 1, 2, 3, 4, 6, 8, 11, 16, 17, 23, 25, 30	
4	Number of motor poles	
	2, 4, 6, 8	
UD	Motor version	
	UD	Without gear unit, non-explosion-proof, for fluid temperatures of up to 40 °C
	YD	Without gear unit, explosion protection Ⓔx II2G Ex db h IIB T4 Gb, for fluid temperatures of up to 40 °C
	UR	With gear unit, non-explosion-proof, for fluid temperatures of up to 40 °C
	YR	With gear unit, explosion protection Ⓔx II2G Ex db h IIB T4 Gb, for fluid temperatures of up to 40 °C
G	Motor housing material	
	G	Grey cast iron
	C	Stainless steel

Materials

Table 4: Pump casing materials of an Amaline 200/300/400 pump

Part No. (⇨ Page 41)	Description	Pump casing material
		C
161	Casing cover	1.4571
721	Adapter	PU
101	Pump casing	1.4571
-	Propeller	1.4571
433	Mechanical seal, propeller end	SiC/SiC
433	Mechanical seal, drive end	SiC/SiC
-	Shaft[1)]	1.4571
-	Elastomers	Viton (FPM)
-	Bolts/screws	A4[2)]

Table 5: Pump casing materials of an Amaline 500/600/800 pump

Part No. (⇨ Page 41)	Description	Pump casing material
		C
161	Casing cover	EN-GJL-250
-	Gear housing	EN-GJL-250
721	Adapter[3)]	PU
101	Pump casing	1.4571
-	Propeller	1.4571
433	Mechanical seal, propeller end	SiC/SiC
433	Mechanical seal, drive end	SiC/SiC
-	Shaft[4)]	1.4122
-	Elastomers	Viton (FPM)
-	Bolts/screws	A4[2)]

Table 6: Motor housing materials of an Amaline 200/300/400 pump

Part No. (⇨ Page 41)	Description	Motor housing material	
		G	C
-	Motor housing	EN-GJL-250	1.4581
812	Motor housing cover	EN-GJL-250	1.4517

Table 7: Motor housing materials of an Amaline 500/600/800 pump

Part No. (⇨ Page 41)	Description	Motor housing material	
		G	C
-	Motor housing	EN-GJL-250	-
812	Motor housing cover	EN-GJL-250	-

Description of materials

EN-GJL-250 grey cast iron (lamellar graphite cast iron)

Lamellar graphite cast iron to EN 1561 is the most widely used cast material for handling municipal sewage, waste water and sludges as well as stormwater and surface water. It is suitable for neutral fluids which are only slightly aggressive and cause little wear. The pH should be ≥ 6.5, the sand content ≤ 0.5 g/l.

Duplex stainless steel (1.4517 or technically equivalent material)

This type of carbon steel is resistant to cavitation, has excellent strength values and is used for high circumferential speeds. An excellent resistance to pitting corrosion makes ferritic-austenitic stainless carbon steel a popular choice for pumping acidic waste water with a high chloride content as well as seawater and brackish water. Thanks to its good chemical resistance, e.g. against waste water containing phosphorous and sulphuric acid, this material is used in a wide range of applications in the chemical industry and process engineering. Pumps made of duplex stainless steel have a very long service life, even when handling brines, chemical waste water (pH 1 - 12), grey water and landfill leachate.

1.4571 / 1.4581 (X10 CrNiMoTi 18 10): austenitic steel

This austenitic steel to DIN 17440 is characterised by its high corrosion resistance in municipal and chemical waste water. It is stabilised with titanium and as such resistant to intergranular corrosion even when welded.

1 For Amaline ...-300/86.. G; shaft made of 1.4021
2 Corresponds to 1.4571
3 Not for Amaline 800
4 Gear unit output shaft

Galvanised materials
When galvanised materials are used in submerged operation in a waste water treatment plant, the occurrence of a high oxygen concentration can lead to premature wear of the zinc coat and, consequently, to premature corrosion. Consult KSB if necessary.

Product benefits

- Perfectly protected by absolutely water-tight cable gland protecting the motor against moisture
- Motor monitored by temperature sensors to prevent it from overheating
- Easy to install
- Double safety by two bi-directional mechanical seals with oil reservoir filled with environmentally friendly oil

Amaline 500/600/800:

- Leakage chamber between oil chamber and gear unit for high reliability
- Optional: leakage sensor in leakage chamber available for non-explosion-proof version

Product information

Product information as per Regulation No. 1907/2006 (REACH)

For information as per European chemicals regulation (EC) No. 1907/2006 (REACH) see https://www.ksb.com/en-global/company/corporate-responsibility/reach.

Acceptance tests and warranty

- Every pump undergoes functional testing to KSB standard ZN 56525.
- Quality is assured by means of an audited and certified quality assurance system to DIN EN ISO 9001.

Special acceptance inspections upon request.

Selection information

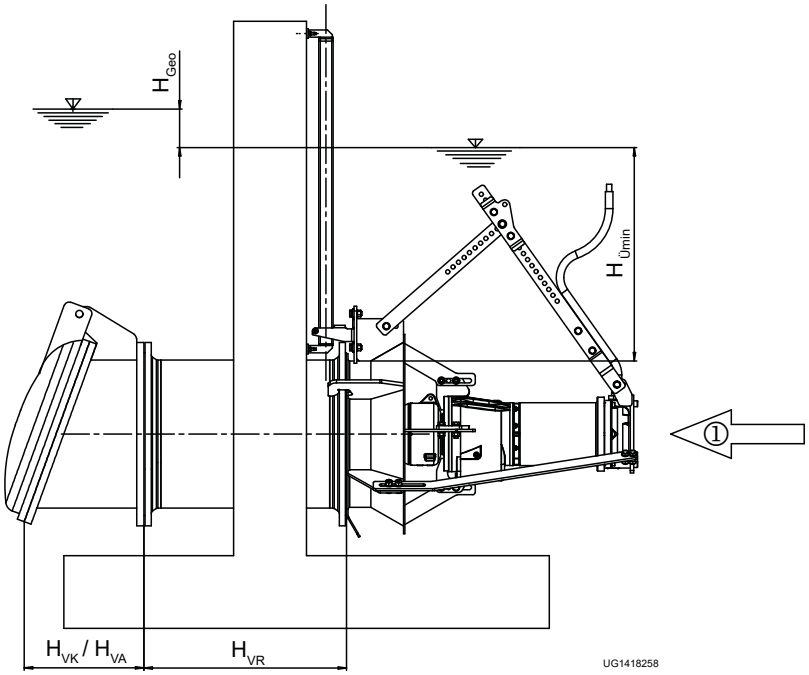

Fig. 1: Drawing showing the design criteria - H_S, H_{Geo}, H_{LP}, H_{LV}, H_{VA}

H_S	Submergence	H_{LP}	Head losses in the pipe
H_{Geo}	Geodetic head	H_{LV}	Head losses in the valve
H_{LTotal}	Head losses in the system	H_{VA}	Head losses at the outlet
①	Direction of flow		

Example:

Given:
Flow rate: Q = 1350 m³/h
Geodetic head: H_{Geo} = 0.3 m

1. Pre-selection

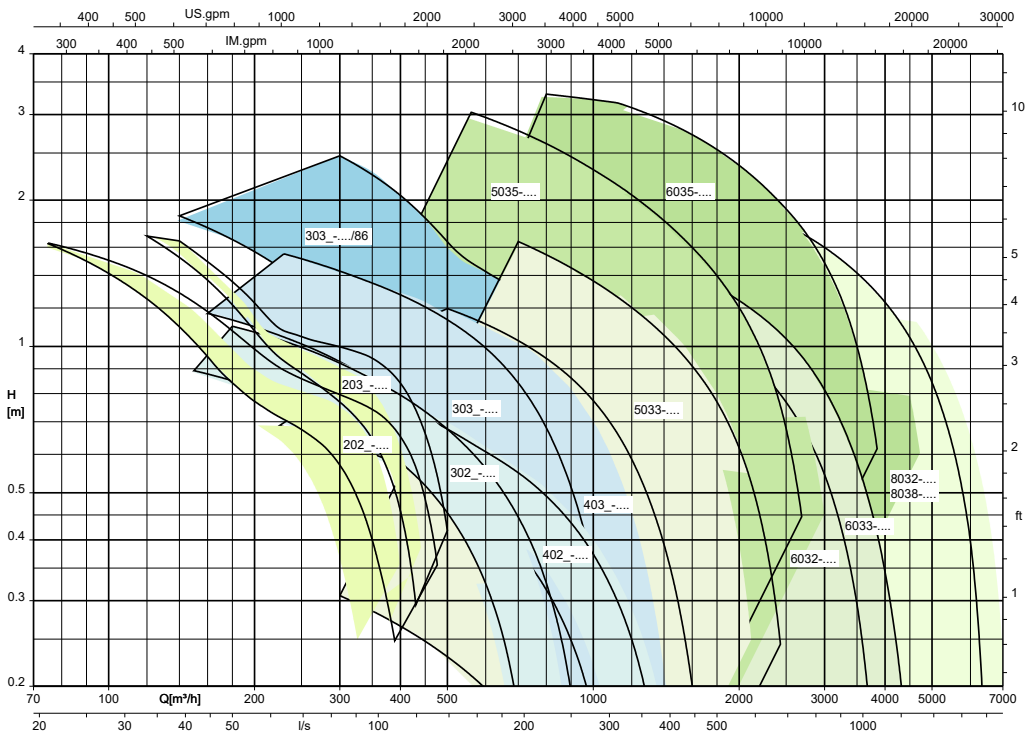

Fig. 2: Pre-selection: Amaline with DN 500

2. Determining the outlet losses

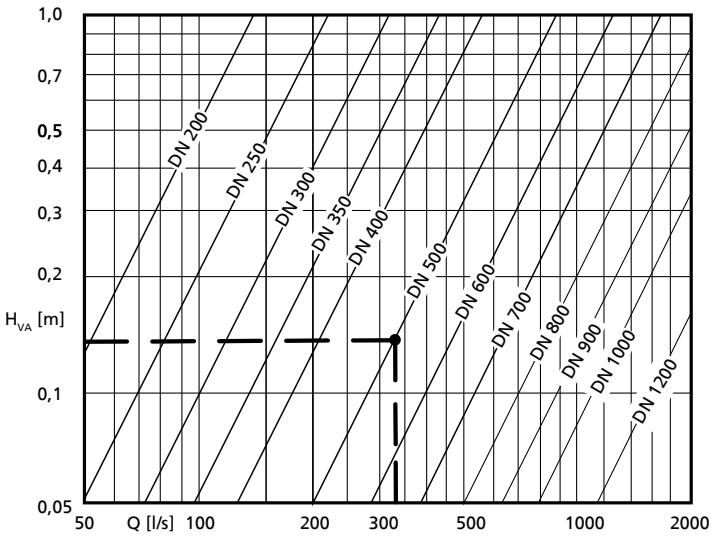

Fig. 3: Head losses at the outlet $H_{VA} = v^2/2g$

$H_{VA} = v^2/2g = 0.15$ m

3. Determining the head

$H = H_{Geo} + H_{LTotal}$

$H_{LTotal} = H_{LP} + H_{LV} + H_{VA}$

$H_{LP} = 0$ m (short pipe)

$H_{LV} = 0.15$ m (observe the manufacturer's information, characteristic $H_{LV\,(Q)}$).

$H_{VA} = v^2/2g = 0.15$ m

H = 0,3 m + 0 m + 0,15 m + 0,15 m + = 0,6 m

1594.51/09-EN

4. Duty point = design point

If operated on a frequency inverter the pump can be run at its design point without deviations.

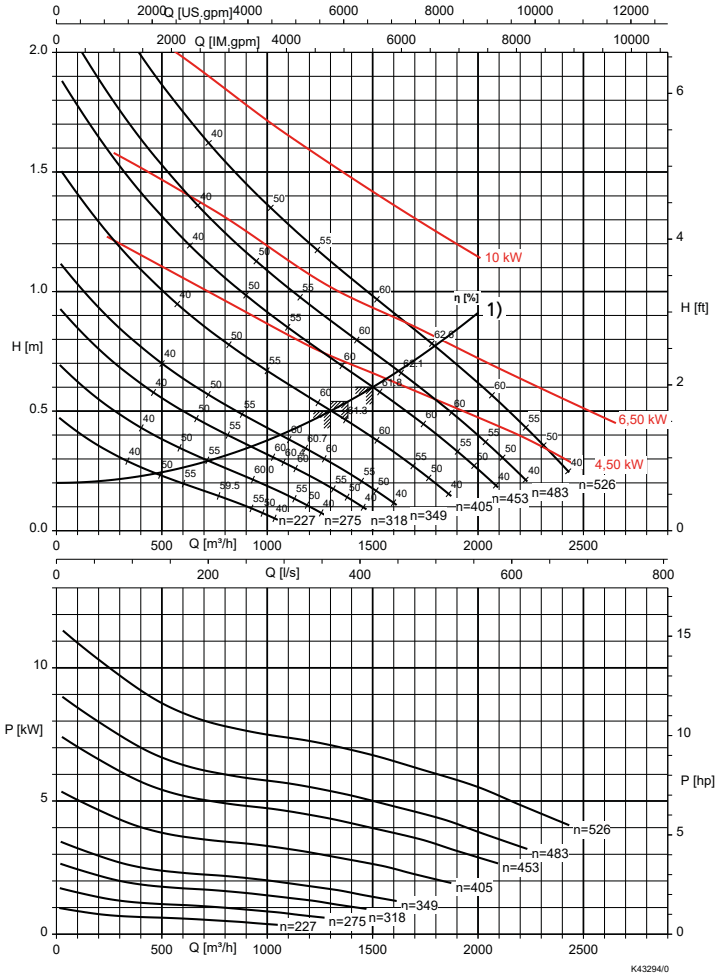

Fig. 4: Speed-based selection chart Amaline 5033-_ _ _, 1) = system curve

The operating speed equals 405 rpm or 453 rpm. All pump sets have sufficient motor reserves (they use max. 85 % of the motor rating).

Table 8: Technical data

Designation	Speed $n_{eff.}$	Motor rating P_2	Drive with gear unit	Transmission ratio
	[rpm]	[kW]		
5033-405/4 4	405	4,5	SP189	3,618
5033-405/6 4	405	6,5	SP189	3,618
5033-453/4 4	453	4,5	SP189	3,232
5033-453/6 4	453	6,5	SP189	3,232

Overview of product features / selection tables

Overview of product features

Table 9: Overview of product features: Amaline 200/300/400; motor housing made of grey cast iron

Feature	Amaline 200	Amaline 300	Amaline 400
Motor size			
4 poles	1 4 2 4	-	-
6 poles	-	0 6 2 6 8 6 12 6 20 6	-
8 poles	-	-	3 8 4 8
Propeller speed	1450 rpm	960 rpm	725 rpm
Propeller diameter	200 mm	303 mm	384 mm
Power range	1.25 kW to 2.5 kW	1.8 kW to 7.5 kW	2.5 kW to 4 kW
Bearing assembly	Grease-packed rolling element bearings sealed for life		
Explosion protection			
Version UD	Non-explosion-proof		
Version YD	Ⓔx II 2G Ex db h IIB T4 Gb		
Motor			
Starting method	DOL[5]		DOL or star-delta
Voltage	400 V[6] 50 Hz, suitable for operation on a frequency inverter		
Cooling	By surrounding fluid handled		
Immersion depth	Up to 12 m[7]		
Power cable			
Length	10 m[8]		
Cable entry	Absolutely watertight		
Type	See table "Overview of power cables"		
Monitoring equipment			
Winding temperature	PTC thermistor		
Leakage	Leakage sensor in the motor space		
Coating	Two-component epoxy resin coating		
Permissible ambient temperature	40 °C		

Table 10: Overview of product features: Amaline 200/300/400; motor housing made of stainless steel

Feature	Amaline 200	Amaline 300	Amaline 400
Motor size			
4 poles	1 4 2 4	-	-
6 poles	-	0 6 2 6	-
8 poles	-	-	3 8 4 8
Propeller speed	1450 rpm	960 rpm	725 rpm
Propeller diameter	200 mm	303 mm	384 mm
Power range	1.25 kW to 2.5 kW	1.8 kW to 3.2 kW	2.5 kW to 4 kW
Bearing assembly	Grease-packed rolling element bearings sealed for life		
Explosion protection			
Version UD	Non-explosion-proof		

5 For motors 8 6, 12 6 and 20 6: DOL or star-delta
6 Optional: 500 V, 690 V on request
7 Larger immersion depths on request
8 Optional: 15 m, 20 m, (> 20 m on request)

Feature	Amaline 200	Amaline 300	Amaline 400
Version YD	Ⓔx II 2G Ex db h IIB T4 Gb		
Motor			
Starting method	DOL		DOL or star-delta
Voltage	400 [6] 50 Hz		
Cooling	By surrounding fluid handled		
Immersion depth	Up to 12 m[7]		
Power cable			
Length	10 m[8]		
Cable entry	Absolutely watertight		
Type	See table "Overview of power cables"		
Monitoring equipment			
Winding temperature	PTC thermistor		
Leakage	Leakage sensor in the motor space[9]		
Coating	-		
Permissible ambient temperature	40 °C		

Table 11: Overview of product features: Amaline 500/600/800; motor housing made of grey cast iron

Feature	Amaline 500	Amaline 600	Amaline 800
Motor size			
2 poles	17 2	17 2 25 2	-
4 poles	4 4 6 4 11 4	4 4 6 4 11 4 16 4	4 4 6 4 11 4 16 4 23 4 30 4
Propeller speed	227 to 719 rpm	227 to 719 rpm	230 to 466 rpm
Propeller diameter	484 mm	585 mm	787 mm
Power range	4.5 kW to 17 kW	4.5 kW to 25 kW	4.5 kW to 27 kW
Bearing assembly			
Motor	Grease-packed rolling element bearings sealed for life		
Gear unit	Oil-lubricated rolling element bearings		
Explosion protection			
Version UR	Non-explosion-proof		
Version YR	Ⓔx II 2G Ex db h IIB T4 Gb		
Motor			
Starting method	DOL or star-delta		
Voltage	400 V[6] 50 Hz, suitable for operation on a frequency inverter		
Cooling	By surrounding fluid handled		
Immersion depth	Up to 12 m[7]		
Power cable			
Length	10 m[8]		
Cable entry	Absolutely watertight		
Type	See table "Overview of power cables"		
Monitoring equipment			
Winding temperature	PTC thermistor		
Leakage	Leakage sensor in the motor space[10]		
Coating	Two-component epoxy resin coating		
Permissible ambient temperature	40 °C		

9 Optional for U version only: additional leakage sensor in the oil reservoir
10 Optional for U version only: additional leakage sensor in the leakage chamber

Table 12: Overview of power cables

Feature	S1BN8-F rubber-sheathed cable	S07RC4N8-F rubber-sheathed cable	TEHSITE Tefzel cable
Design	Standard	On request	Optional
Rated voltage	1000 V	750 V	750 V
EMC screening	-	✓	-
Insulation material	EPR[11)]	EPR[11)]	ETFE[12)]
Max. continuous temperature of insulation	90 °C	90 °C	135 °C
For permanent immersion in waste water to DIN VDE 0282-16/HD22.16	✓	✓	✓

Combination of pump and motor: Amaline 200, 300, 400; motor housing made of grey cast iron

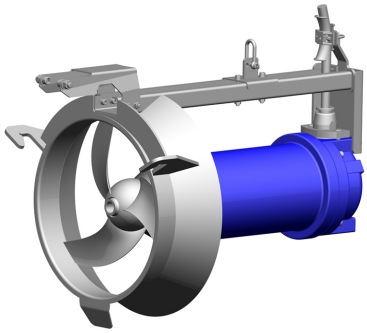

Fig. 5: Amaline 200/300/400 (direct drive)[13)]

Table 13: Overview of pump sizes and motors

Amaline	Motors						
	1 4	2 4	0 6	2 6	8 6	3 8	4 8
Amaline 200							
2021-1450	✗	-	-	-	-	-	-
2022-1450	✗	✗	-	-	-	-	-
2034-1450	-	✗	-	-	-	-	-
2035-1450	-	✗	-	-	-	-	-
Amaline 300 (lower motor ratings)							
3021-960	-	-	✗	-	-	-	-
3022-960	-	-	✗	✗	-	-	-
3031-960	-	-	✗	✗	-	-	-
3032-960	-	-	✗	✗	-	-	-
3033-960	-	-	✗	✗	-	-	-
Amaline 300 (higher motor ratings)							
3034-960	-	-	-	-	✗	-	-
3035-960	-	-	-	-	✗	-	-
3036-960	-	-	-	-	✗	-	-
Amaline 400							
4021-725	-	-	-	-	-	✗	-
4022-725	-	-	-	-	-	✗	✗
4031-725	-	-	-	-	-	✗	✗
4032-725	-	-	-	-	-	✗	✗
4033-725	-	-	-	-	-	✗	✗

Combination of pump and motor: Amaline 200, 300, 400; motor housing made of stainless steel

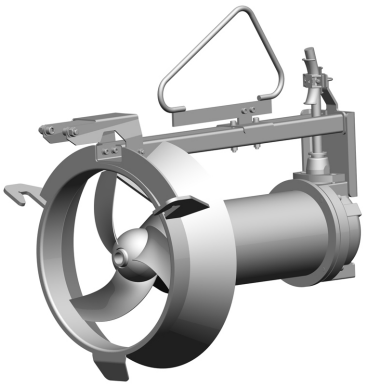

Fig. 6: Amaline 200/300/400 (direct drive)[14)]

Table 14: Overview of pump sizes and motors

Amaline	Motors					
	1 4	2 4	0 6	2 6	3 8	4 8
Amaline 200						
2021-1450	✗	-	-	-	-	-
2022-1450	✗	✗	-	-	-	-
2034-1450	-	✗	-	-	-	-
2035-1450	-	✗	-	-	-	-
Amaline 300 (lower motor ratings)						
3021-960	-	-	✗	-	-	-
3022-960	-	-	✗	✗	-	-
3031-960	-	-	✗	✗	-	-
3032-960	-	-	✗	✗	-	-
3033-960	-	-	✗	✗	-	-
Amaline 400						
4021-725	-	-	-	-	✗	-
4022-725	-	-	-	-	✗	✗
4031-725	-	-	-	-	✗	✗
4032-725	-	-	-	-	✗	✗
4033-725	-	-	-	-	✗	✗

1594.51/09-EN

11 EPR = ethylene propylene rubber
12 ETFE = ethylene tetrafluoroethylene
13 Illustration with shackle as the attachment point (standard)
14 Illustration with bail as the attachment point (optional)

Combination of pump and motor: Amaline 500, 600, 800; motor housing made of grey cast iron

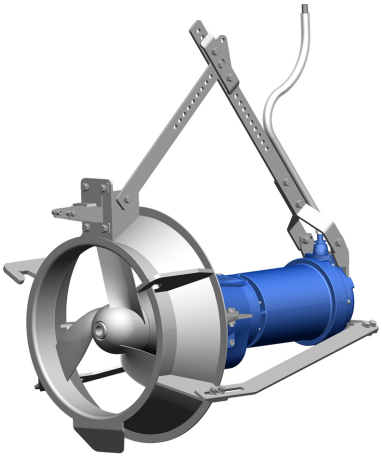

Fig. 7: Amaline 500/600/800 (spur gear drive)

Table 15: Overview of pump sizes and motors

Amaline	Motors							
	17 2	25 2	4 4	6 4	11 4	16 4	23 4	30 4
Amaline 500 (lower motor ratings)								
5033-227	-	-	✗	-	-	-	-	-
5033-275	-	-	✗	-	-	-	-	-
5033-318	-	-	✗	-	-	-	-	-
5033-349	-	-	✗	-	-	-	-	-
5033-405	-	-	✗	✗	-	-	-	-
5033-453	-	-	✗	✗	✗	-	-	-
5033-483	-	-	-	✗	✗	-	-	-
5033-526	-	-	-	-	✗	-	-	-
Amaline 500 (higher motor ratings)								
5035-453	-	-	✗	-	-	-	-	-
5035-483	-	-	✗	✗	-	-	-	-
5035-526	-	-	✗	✗	-	-	-	-
5035-558	✗	-	-	-	-	-	-	-
5035-608	✗	-	-	-	-	-	-	-
5035-640	✗	-	-	-	-	-	-	-
5035-672	✗	-	-	-	-	-	-	-
5035-719	✗	-	-	-	-	-	-	-
Amaline 600 (lower motor ratings)								
6032-227	-	-	✗	-	-	-	-	-
6032-275	-	-	✗	-	-	-	-	-
6032-318	-	-	✗	-	-	-	-	-
6032-354	-	-	✗	-	-	-	-	-
6032-405	-	-	✗	✗	-	-	-	-
6032-453	-	-	✗	✗	✗	-	-	-
6032-483	-	-	-	✗	✗	-	-	-
6032-526	-	-	-	✗	✗	-	-	-
6033-227	-	-	✗	-	-	-	-	-
6033-275	-	-	✗	-	-	-	-	-
6033-318	-	-	✗	-	-	-	-	-
6033-354	-	-	✗	✗	-	-	-	-
6033-405	-	-	✗	✗	✗	-	-	-
6033-453	-	-	✗	✗	✗	-	-	-
6033-483	-	-	-	✗	✗	-	-	-
6033-526	-	-	-	✗	✗	-	-	-
Amaline 600 (higher motor ratings)								
6035-357	-	-	-	-	-	✗	-	-
6035-405	-	-	-	-	-	✗	-	-
6035-453	-	-	-	-	✗	-	-	-
6035-488	✗	-	-	-	-	-	-	-
6035-522	✗	-	-	-	-	-	-	-
6035-558	✗	-	-	-	-	-	-	-
6035-608	✗	✗	-	-	-	-	-	-
6035-640	✗	✗	-	-	-	-	-	-
6035-672	✗	✗	-	-	-	-	-	-
6035-719	-	✗	-	-	-	-	-	-
Amaline 800								
8032-206	-	-	✗	-	-	-	-	-
8032-230	-	-	✗	✗	-	-	-	-
8032-279	-	-	-	✗	✗	-	-	-
8032-317	-	-	-	-	-	✗	-	-
8032-334	-	-	-	-	-	✗	-	-
8032-357	-	-	-	-	-	✗	✗	-
8032-386	-	-	-	-	-	✗	✗	-
8032-405	-	-	-	-	-	-	✗	✗
8032-433	-	-	-	-	-	-	✗	✗
8032-466	-	-	-	-	-	-	✗	✗
8038-206[15)]	-	-	✗	-	-	-	-	-
8038-230[15)]	-	-	✗	✗	-	-	-	-
8038-279[15)]	-	-	-	✗	✗	-	-	-
8038-317[15)]	-	-	-	-	-	✗	-	-
8038-334[15)]	-	-	-	-	-	✗	-	-
8038-357[15)]	-	-	-	-	-	✗	✗	-
8038-386[15)]	-	-	-	-	-	✗	✗	-
8038-405[15)]	-	-	-	-	-	-	✗	✗
8038-433[15)]	-	-	-	-	-	-	✗	✗
8038-466[15)]	-	-	-	-	-	-	✗	✗

Standard and special designs

Table 16: Standard and special designs

Option	Comments
Mechanical seal with covered springs	Available for all sizes
Power cable > 20 m	Available for all sizes
Leakage sensor in leakage chamber of mechanical seal	Available for all Amaline 500/600/800 sizes of version UR
Analysing device for leakage sensor, thermistor tripping unit for monitoring the winding temperature	Available for all sizes
Special voltages 500 V and 690 V	Available for all sizes
Two-component epoxy resin coating, 250 µm	Available for all sizes
Additional operating manuals	Standard: 1 operating manual per pump set
Customer-specific installation drawing	Available for all sizes
Flow measurements	Available for all sizes
Flow simulation	Available for all sizes
Installation consultancy	Available for all sizes

15 Axial propeller suitable for problematic waste water containing long fibres

For any versions not documented in this type series booklet or special versions please always contact KSB for technical details, prices and delivery periods.

Examples:

- Other voltages (except 400 V / 500 V / 690 V)
- Special coatings
- Combinations of special motor, special propeller, special gear unit
- Special installation parts
- Special cables

Specifications required for enquiries/orders

Connection pipe

- Nominal diameter
- Material variant
- Dimensions l_3 and l_4

E.g. connection pipe DN 500 made of galvanised steel, l_3 = 2 m and l_4 = 0.3 m
= 122.5 kg + 78.5 kg = **201 kg**

1594.51/09-EN

Selection chart

Amaline 200/300/400, n = 1450/960/725 rpm, Amaline 500/600/800, n = 729 - 206 rpm

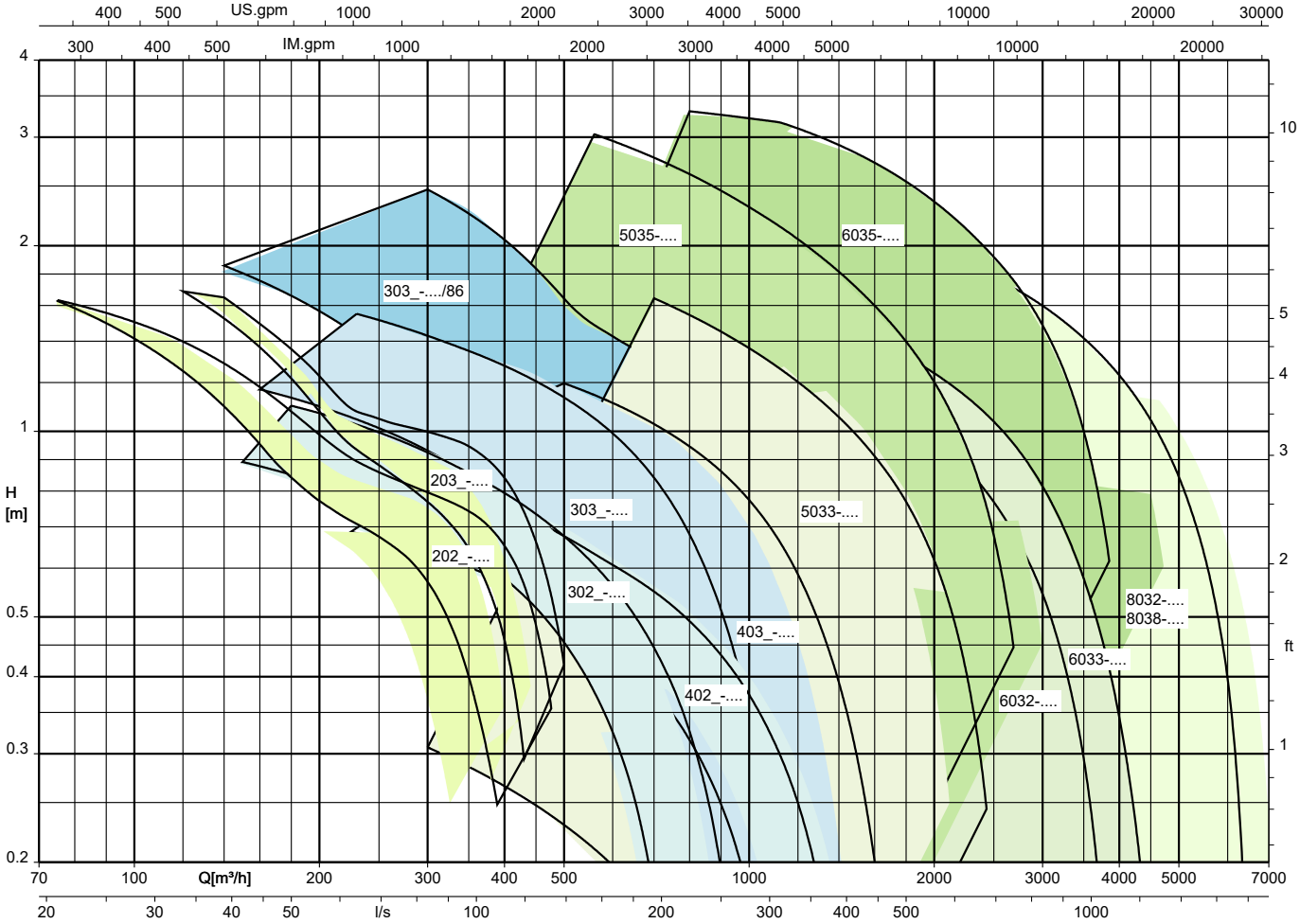

Characteristic curves

Amaline 202_, motors: 1 4, 2 4

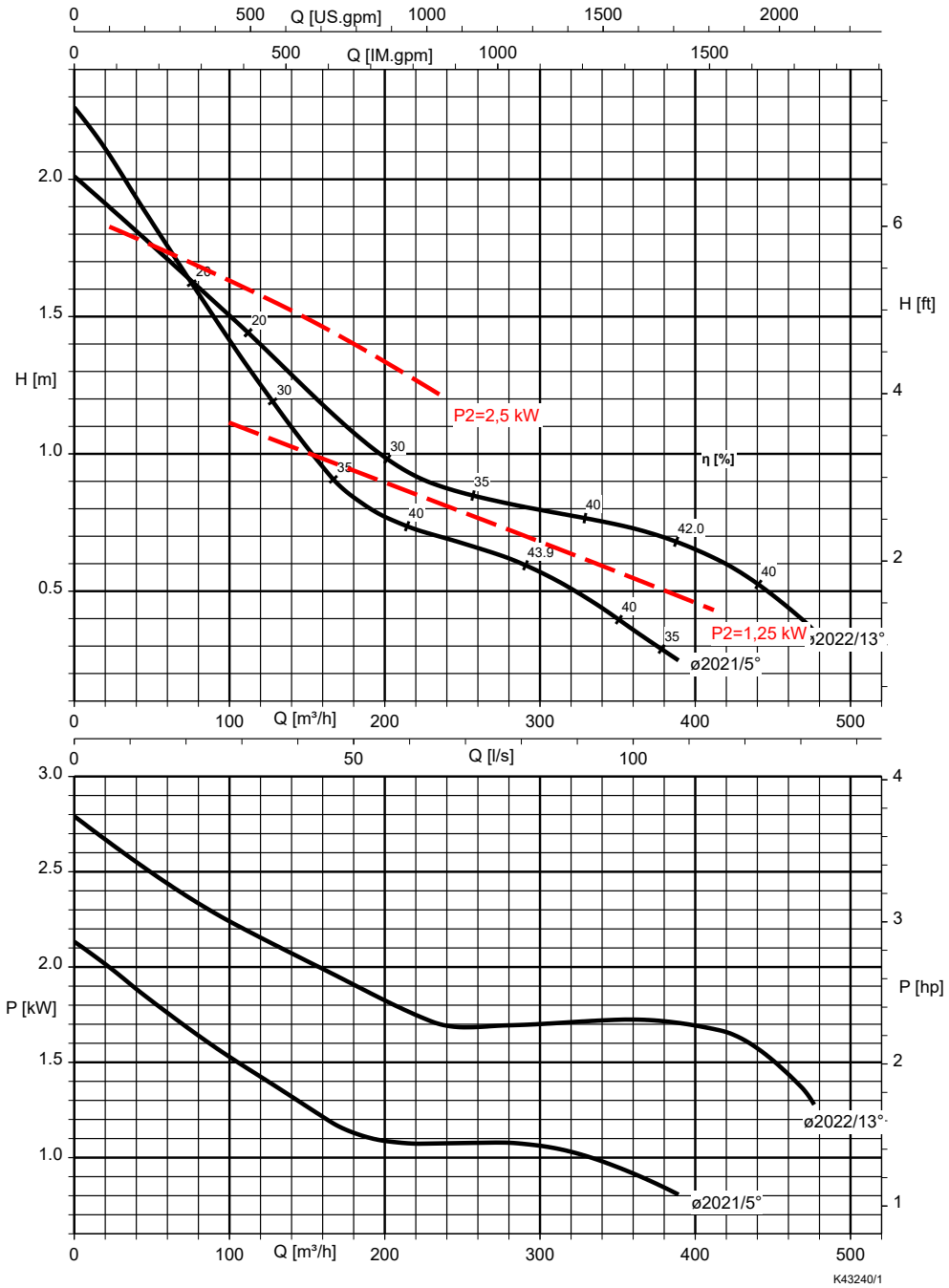

Free passage = 65 mm

Table 17: Speed n_n and motor rating P_2

Size	n_n	P_2
	[rpm]	[kW]
2021-1450/14UDG/YDG/UDC/YDC	1450	1,25
2022-1450/14UDG/YDG/UDC/YDC	1450	1,25
2022-1450/24UDG/YDG/UDC/YDC	1450	2,5

Amaline 203_, motors: 2 4

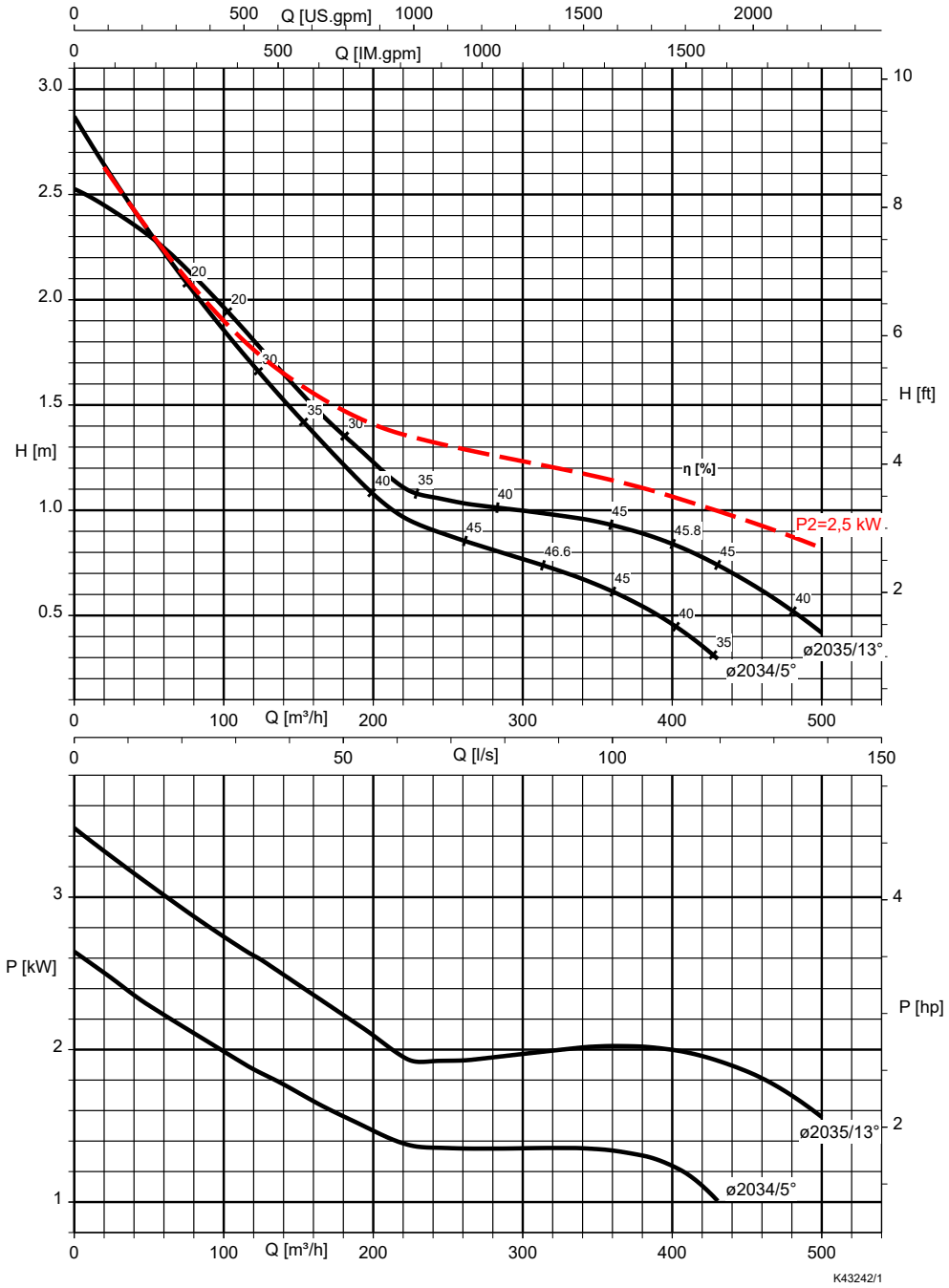

Free passage = 65 mm

Table 18: Speed n_n and motor rating P_2

Size	n_n	P_2
	[rpm]	[kW]
2034-1450/24UDG/YDG/UDC/YDC	1450	2,5
2035-1450/24UDG/YDG/UDC/YDC	1450	2,5

Amaline 302_, motors: 0 6, 2 6

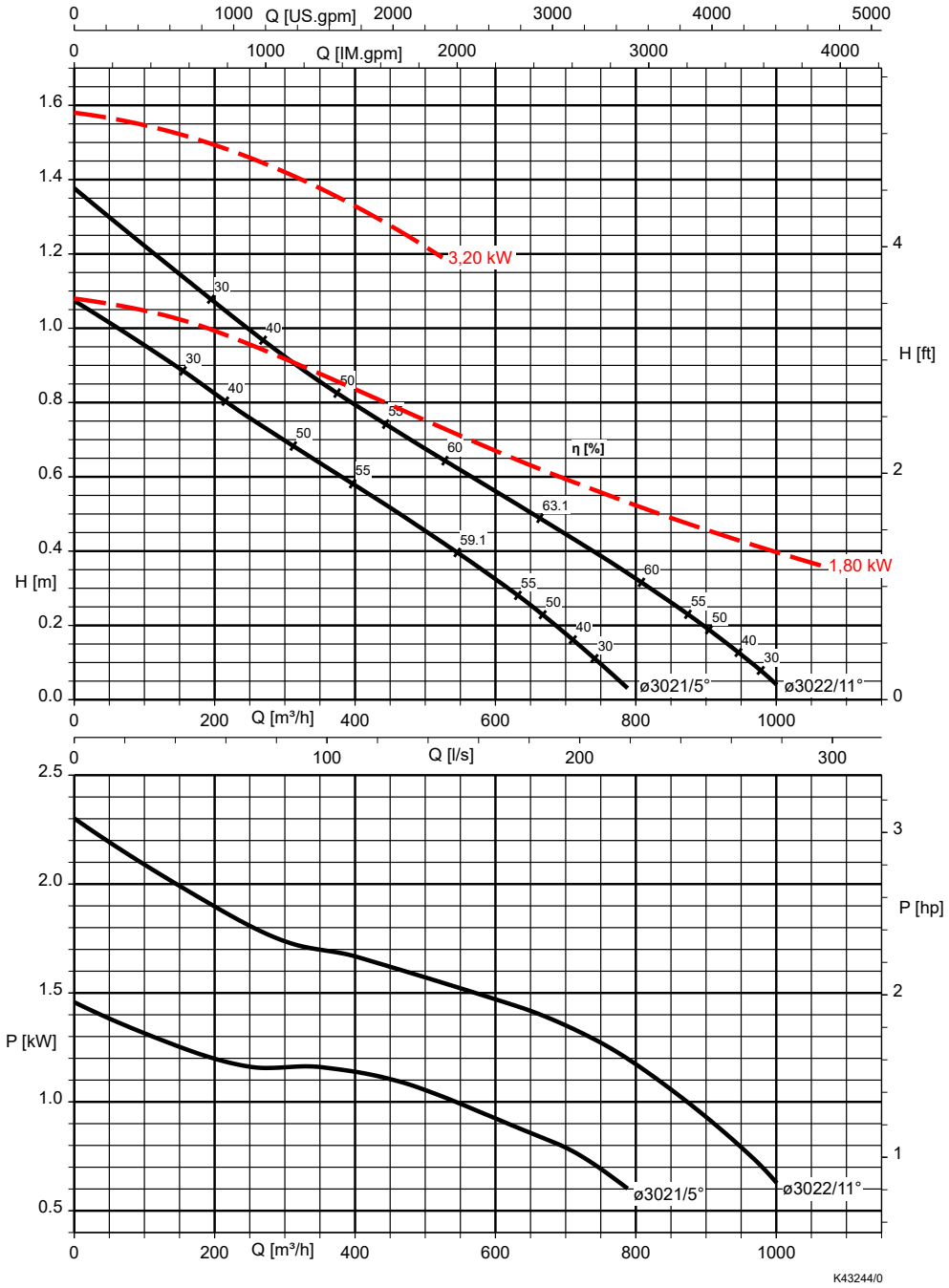

Free passage = 100 mm

Table 19: Speed n_n and motor rating P_2

Size	n_n	P_2
	[rpm]	[kW]
3021-960/06UDG/YDG/UDC/YDC	960	1,8
3022-960/06UDG/YDG/UDC/YDC	960	1,8
3022-960/26UDG/YDG/UDC/YDC	960	3,2

Amaline 303_, motors: 0 6, 2 6

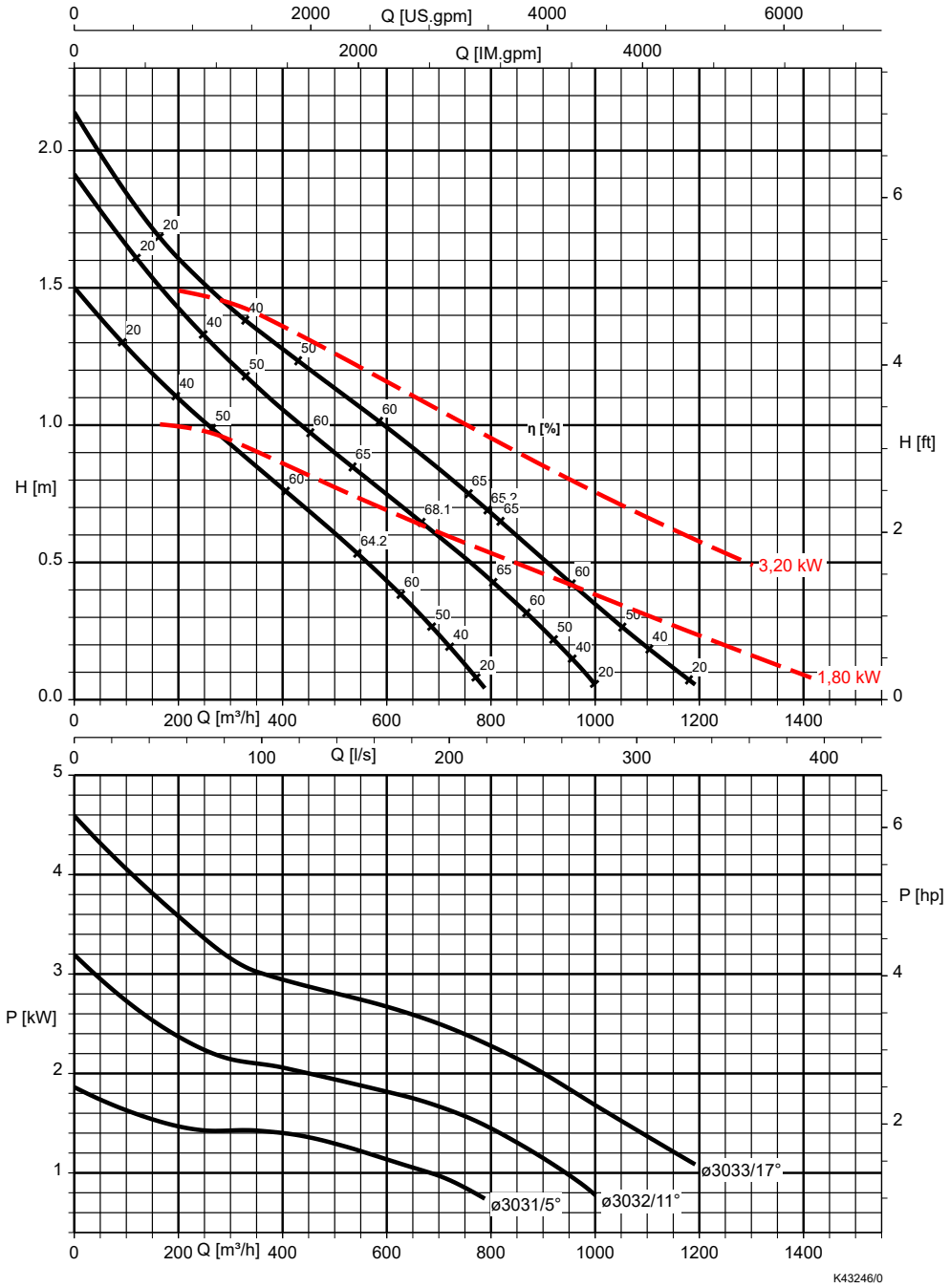

Free passage = 100 mm

Table 20: Speed n_n and motor rating P_2

Size	n_n [rpm]	P_2 [kW]
3031-960/06UDG/YDG/UDC/YDC	960	1,8
3031-960/26UDG/YDG/UDC/YDC	960	3,2
3032-960/06UDG/YDG/UDC/YDC	960	1,8
3032-960/26UDG/YDG/UDC/YDC	960	3,2
3033-960/06UDG/YDG/UDC/YDC	960	1,8
3033-960/26UDG/YDG/UDC/YDC	960	3,2

Amaline 303_, motors: 8 6

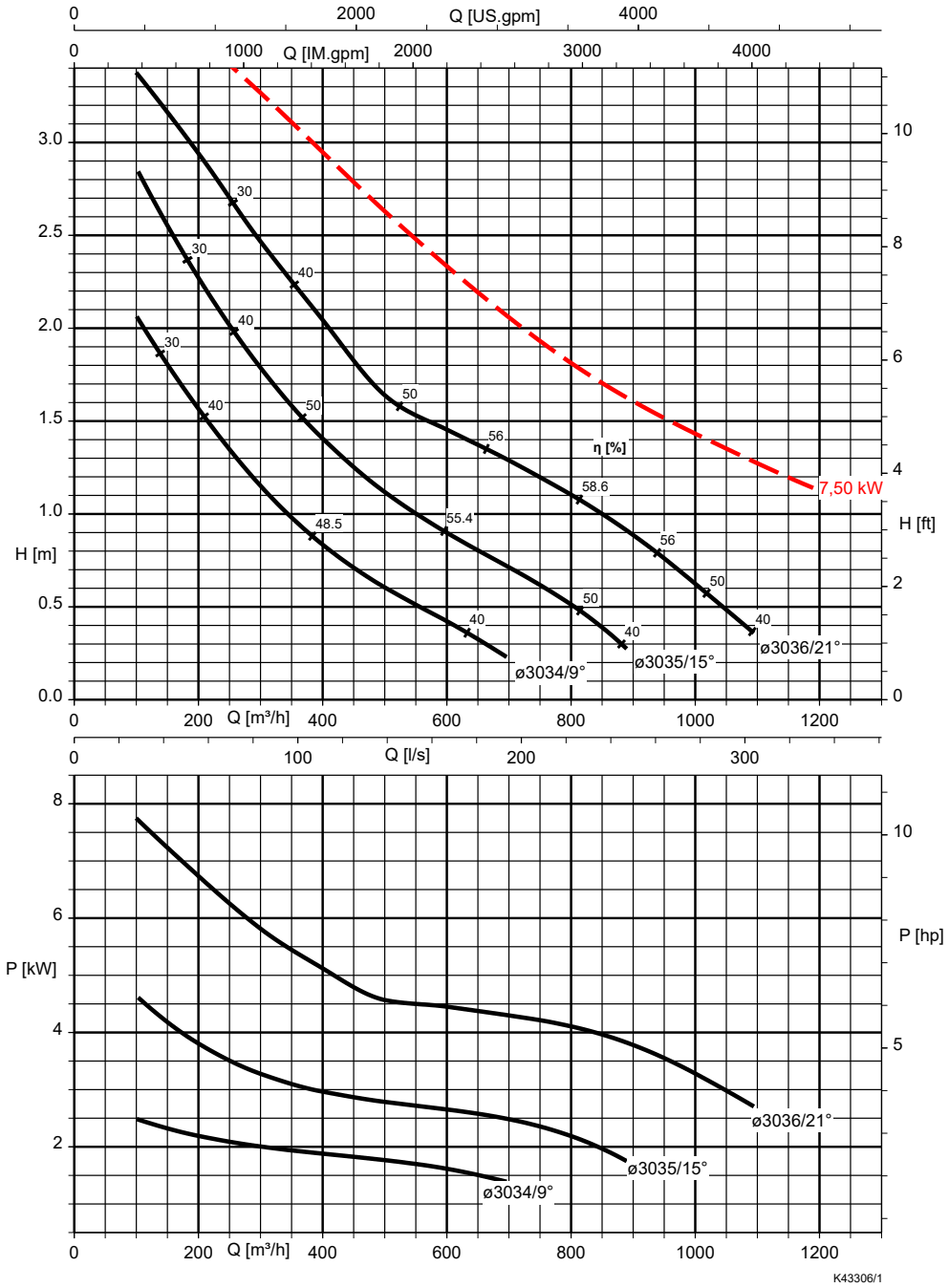

Free passage = 80 mm

Table 21: Speed n_n and motor rating P_2

Size	n_n	P_2
	[rpm]	[kW]
3034-960/86UDG/YDG	960	7,5
3035-960/86UDG/YDG	960	7,5
3036-960/86UDG/YDG	960	7,5

Amaline 402_, motors: 3 8, 4 8

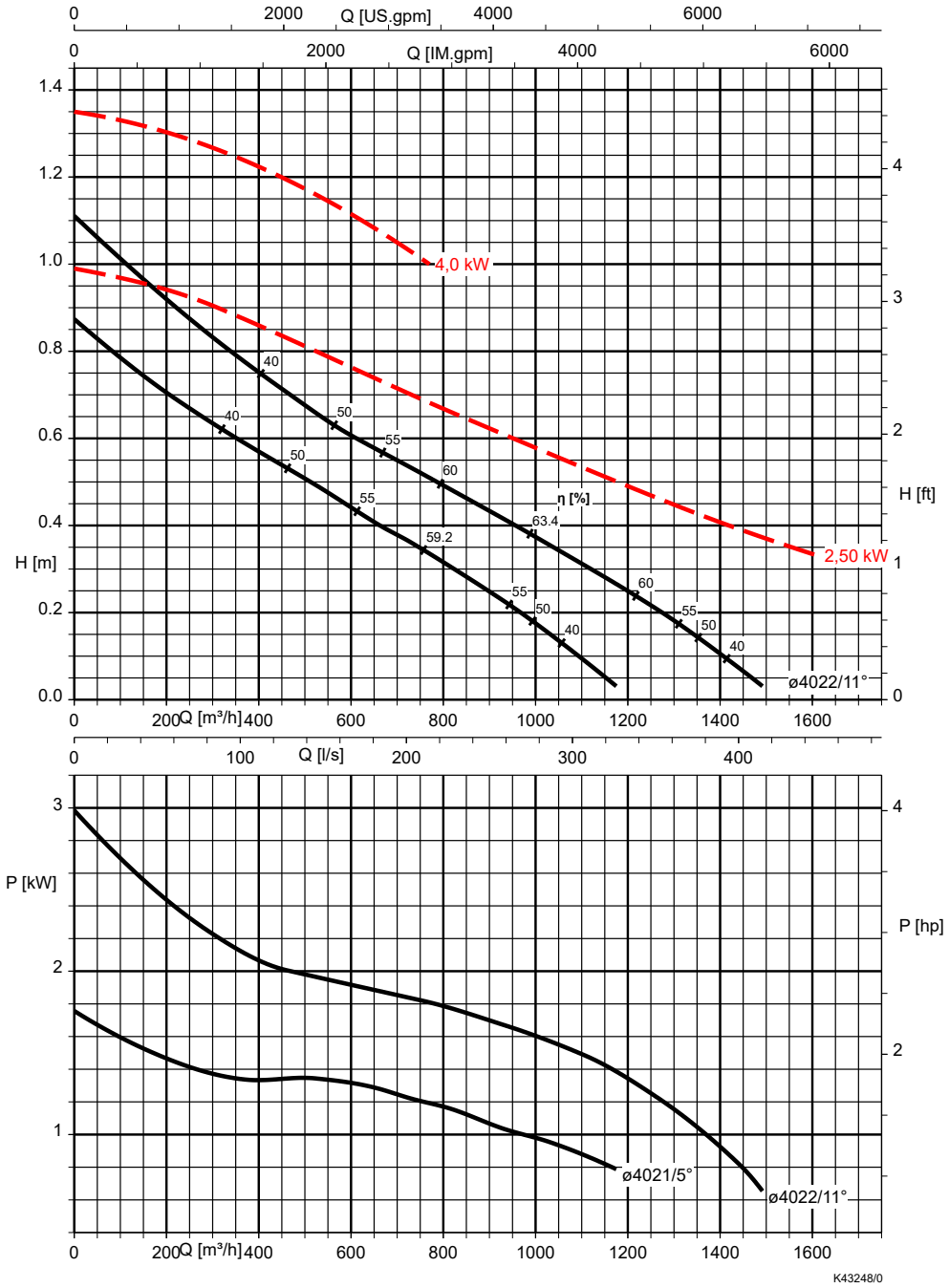

Free passage = 120 mm

Table 22: Speed n_n and motor rating P_2

Size	n_n	P_2
	[rpm]	[kW]
4021-725/38UDG/YDG/UDC/YDC	700	2,5
4022-725/38UDG/YDG/UDC/YDC	700	2,5
4022-725/48UDG/YDG/UDC/YDC	700	4,0

Amaline 403_, motors: 3 8, 4 8

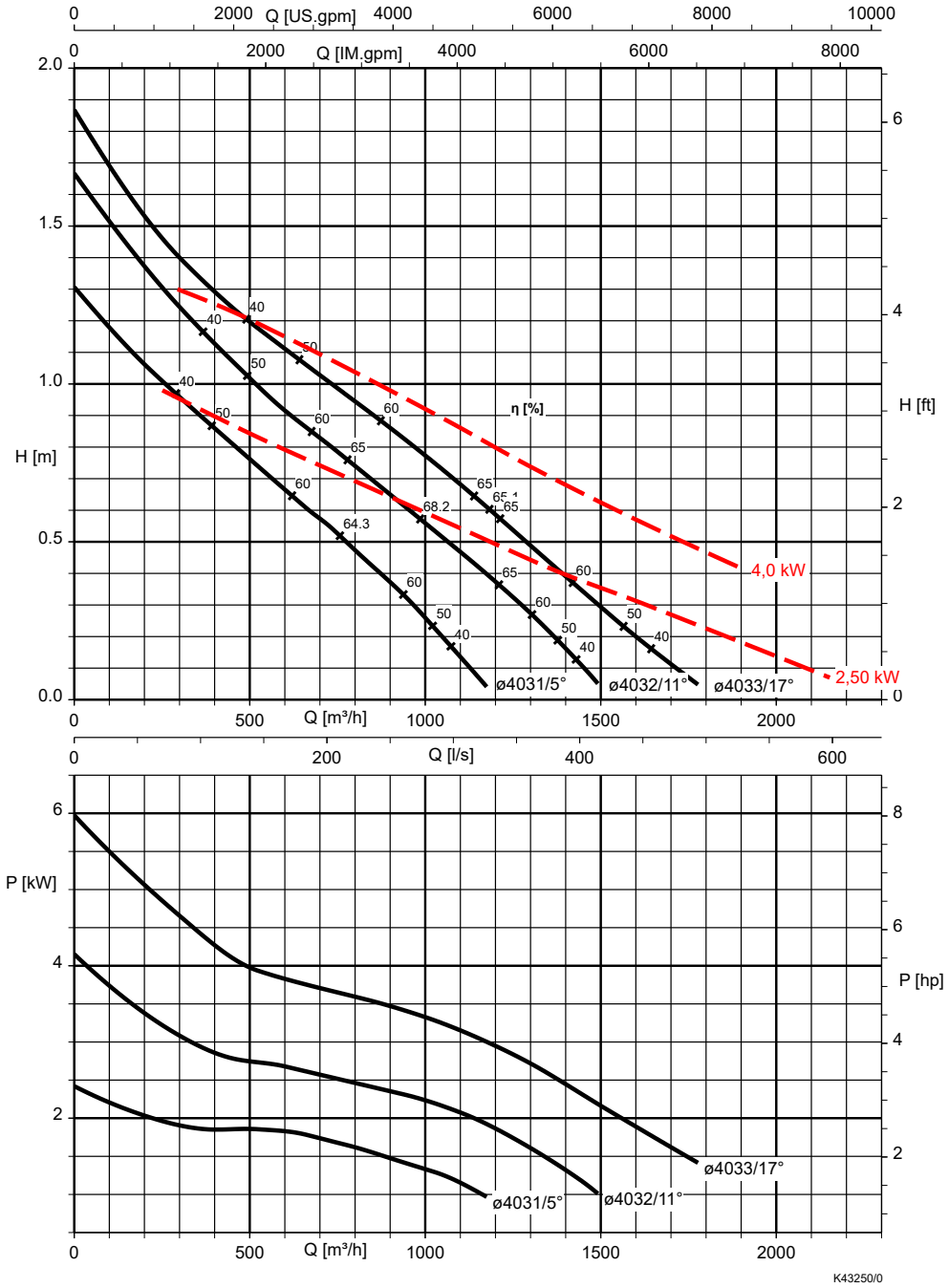

Free passage = 120 mm

Table 23: Speed n_n and motor rating P_2

Size	n_n	P_2
	[rpm]	[kW]
4031-725/38UDG/YDG/UDC/YDC	725	2,5
4031-725/48UDG/YDG/UDC/YDC	725	4,0
4032-725/38UDG/YDG/UDC/YDC	725	2,5
4032-725/48UDG/YDG/UDC/YDC	725	4,0
4033-725/38UDG/YDG/UDC/YDC	725	2,5
4033-725/48UDG/YDG/UDC/YDC	725	4,0

Amaline 5033- _ _ _, motors: 4 4, 6 4, 11 4

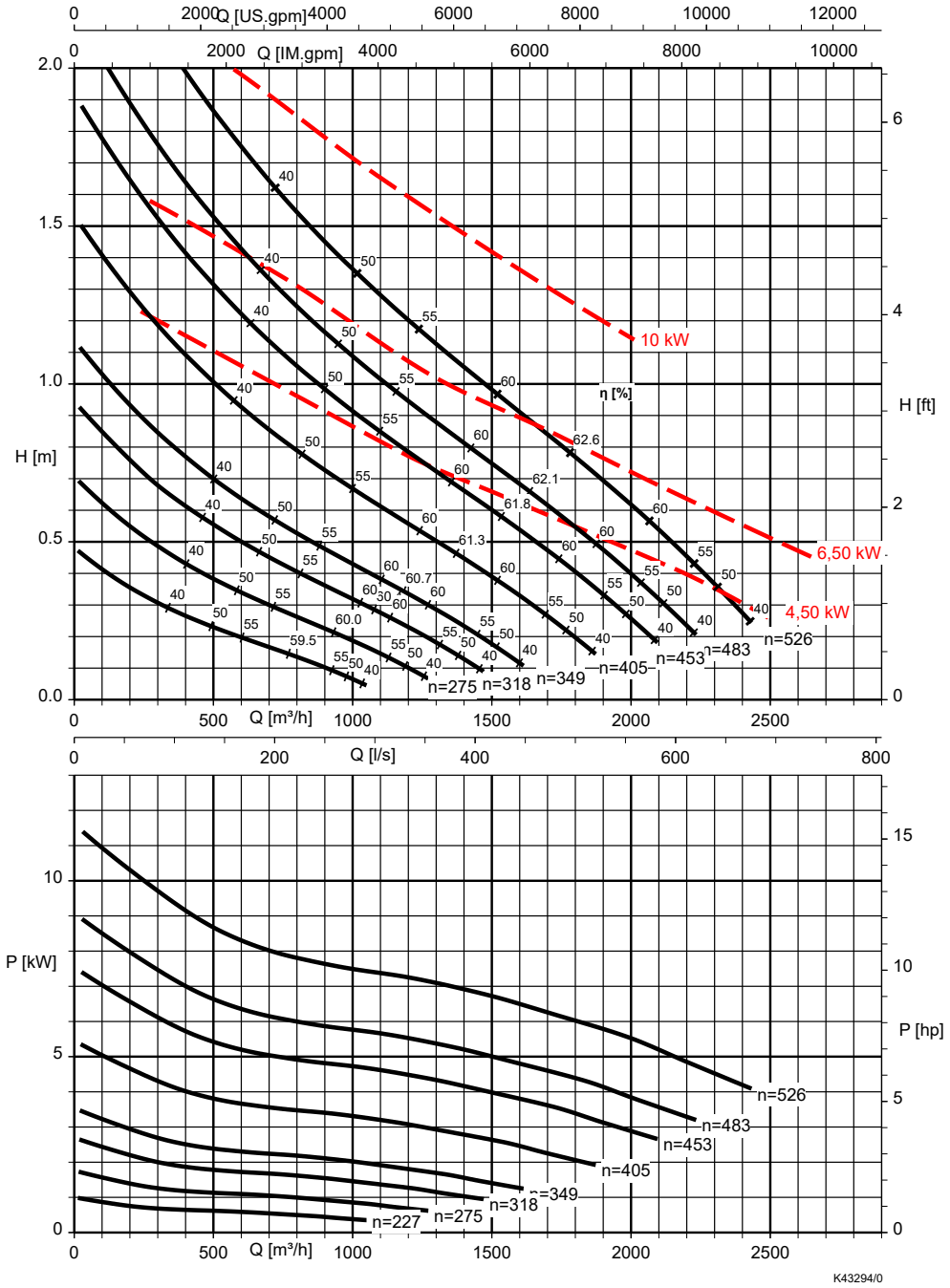

Free passage = 140 mm

Table 24: Speed $n_{eff.}$ and motor rating P_2

Size	$n_{eff.}$ [rpm]	P_2 [kW]	Gear unit	i[16]
5033-227/44URG/YRG	227	4,5	SP189	6,356
5033-275/44URG/YRG	275	4,5	SP189	5,250
5033-318/44URG/YRG	318	4,5	SP189	4,545
5033-349/44URG/YRG	349	4,5	SP189	4,143
5033-405/44URG/YRG	405	4,5	SP189	3,618
5033-405/64URG/YRG	405	6,5	SP189	3,618
5033-453/44URG/YRG	453	4,5	SP189	3,232
5033-453/64URG/YRG	453	6,5	SP189	3,232
5033-453/114URG/YRG	453	10,0	SP189	3,232
5033-483/64URG/YRG	483	6,5	SP189	3,036
5033-483/114URG/YRG	483	10,0	SP189	3,036
5033-526/114URG/YRG	526	10,0	SP189	2,784

16 Transmission ratio

Amaline 5035- _ _ _, motors: 17 2, 4 4, 6 4

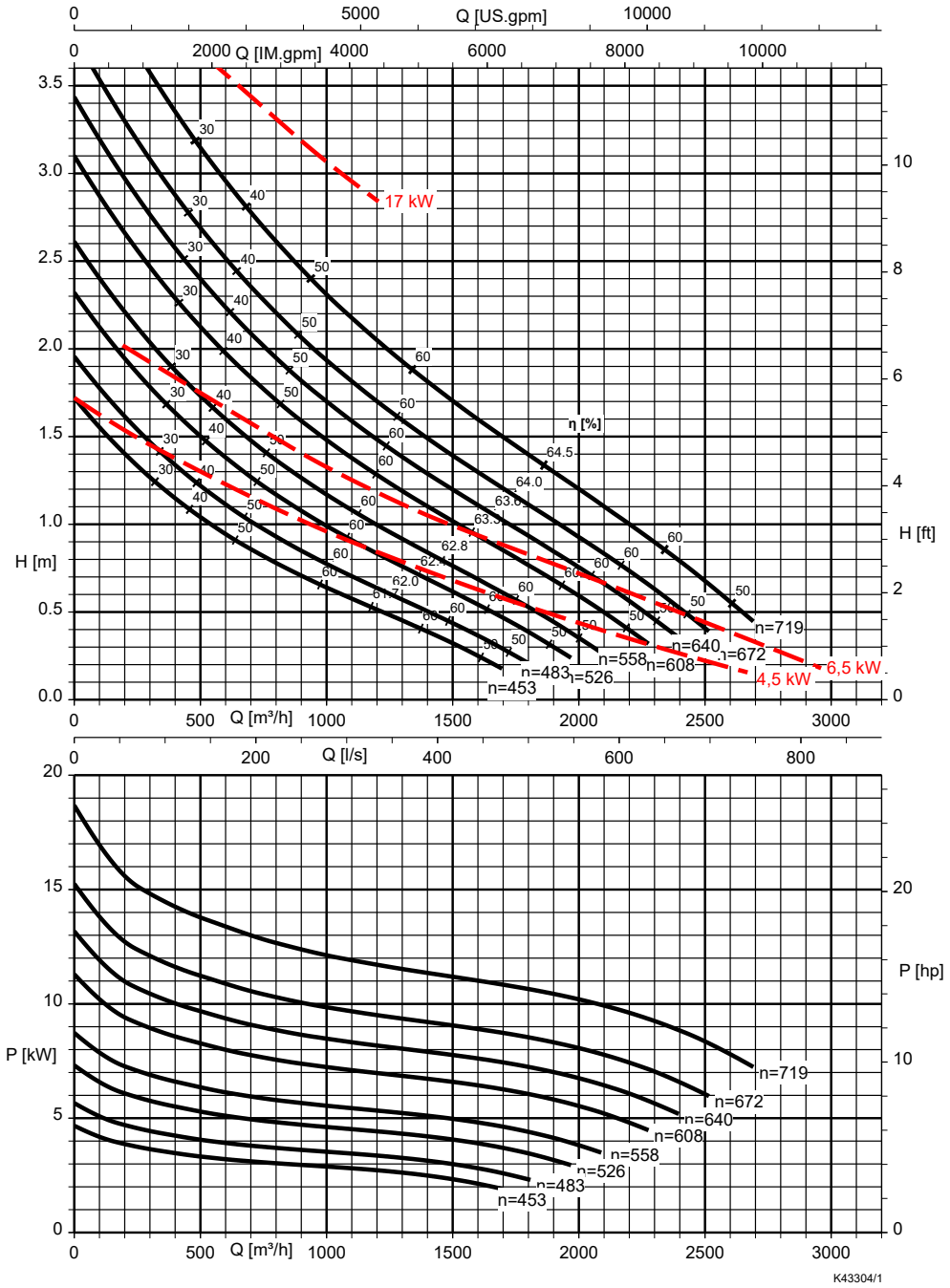

Free passage = 140 mm

Table 25: Speed $n_{eff.}$ and motor rating P_2

Size	$n_{eff.}$ [rpm]	P_2 [kW]	Gear unit	i[17]
5035-453/44URG/YRG	453	4,5	SP189	3,232
5035-483/44URG/YRG	483	4,5	SP189	3,036
5035-483/64URG/YRG	483	6,5	SP189	3,036
5035-526/44URG/YRG	526	4,5	SP189	2,780
5035-526/64URG/YRG	526	6,5	SP189	2,780
5035-558/172URG/YRG	558	17,0	SP190	5,294
5035-608/172URG/YRG	608	17,0	SP190	4,856
5035-640/172URG/YRG	640	17,0	SP190	4,616
5035-672/172URG/YRG	672	17,0	SP190	4,392
5035-719/172URG/YRG	719	17,0	SP190	4,104

17 Transmission ratio

1594.51/09-EN

Amaline 6032- _ _ _, motors: 4 4, 6 4, 11 4

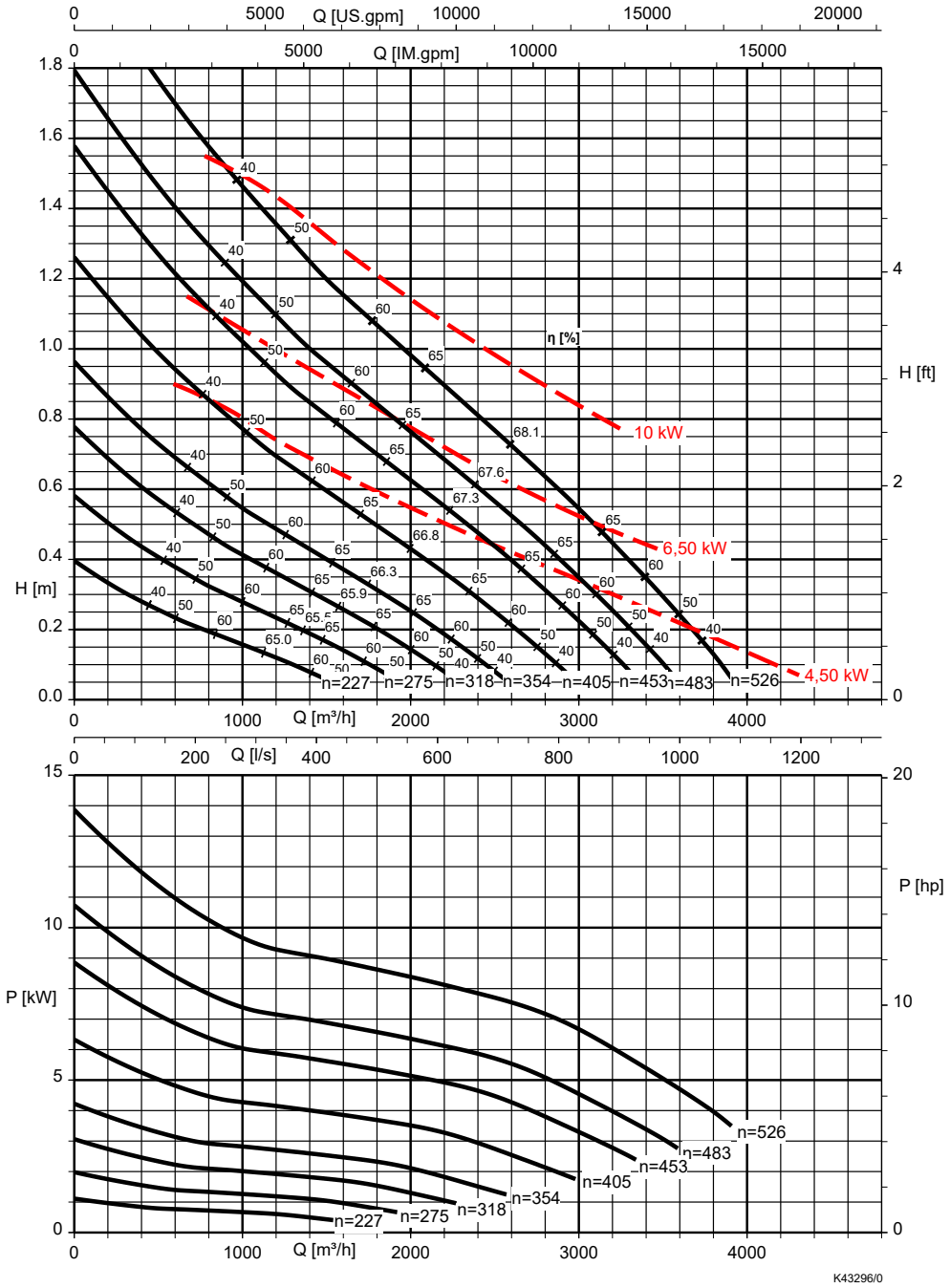

Free passage = 200 mm

Table 26: Speed $n_{eff.}$ and motor rating P_2

Size	$n_{eff.}$ [rpm]	P_2 [kW]	Gear unit	i[18]
6032-227/44URG/YRG	227	4,5	SP189	6,356
6032-275/44URG/YRG	275	4,5	SP189	5,250
6032-318/44URG/YRG	318	4,5	SP189	4,545
6032-354/44URG/YRG	354	4,5	SP189	4,143
6032-405/44URG/YRG	405	4,5	SP189	3,618
6032-405/64URG/YRG	405	6,5	SP189	3,618
6032-453/44URG/YRG	453	4,5	SP189	3,232
6032-453/64URG/YRG	453	6,5	SP189	3,232
6032-453/114URG/YRG	453	10,0	SP189	3,232
6032-483/64URG/YRG	483	6,5	SP189	3,036
6032-483/114URG/YRG	483	10,0	SP189	3,036
6032-526/64URG/YRG	526	6,5	SP189	2,784
6032-526/114URG/YRG	526	10,0	SP189	2,784

18 Transmission ratio

Amaline 6033- _ _ _, motors: 4 4, 6 4, 11 4

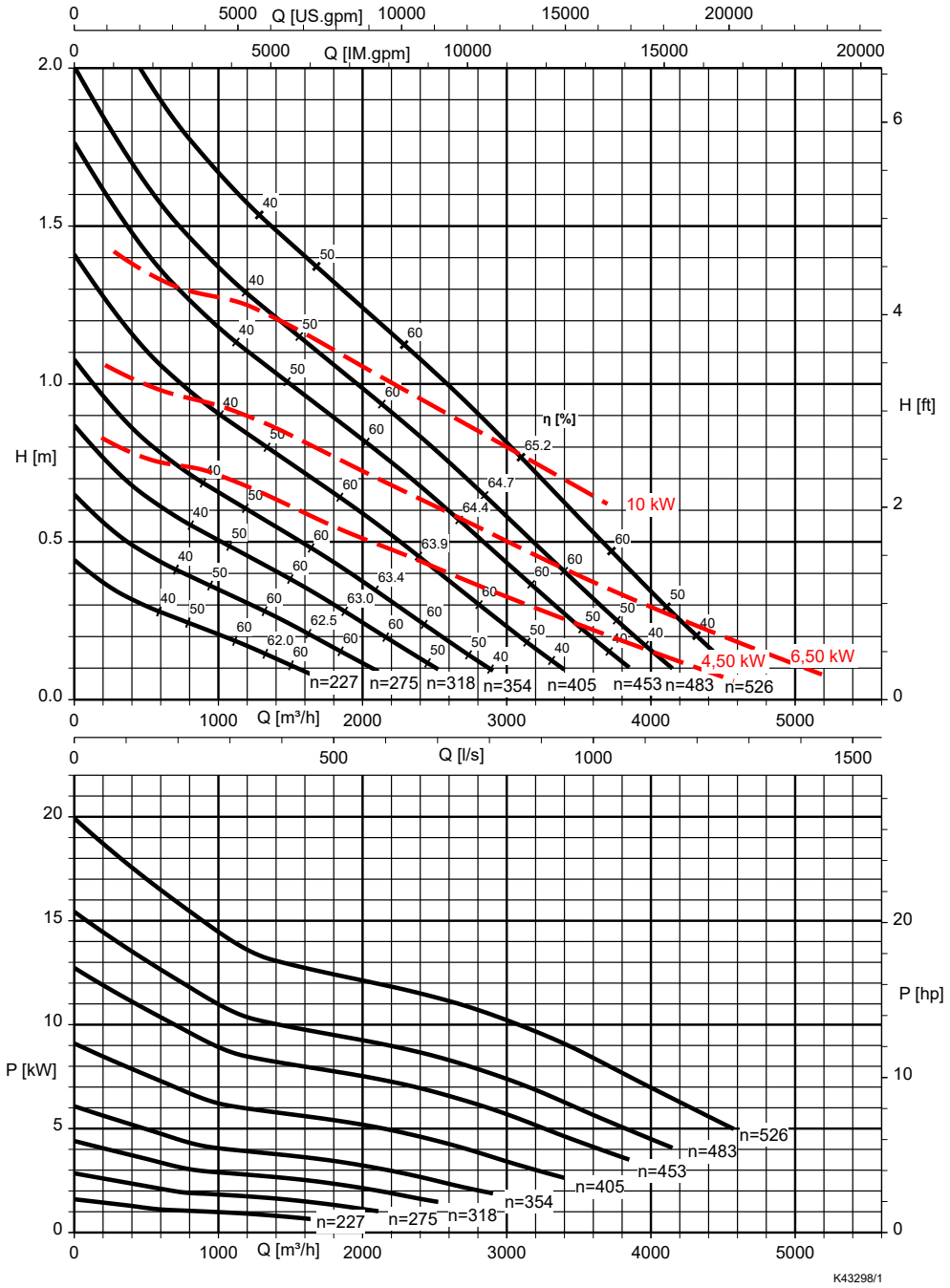

Free passage = 200 mm

Table 27: Speed $n_{eff.}$ and motor rating P_2

Size	$n_{eff.}$ [rpm]	P_2 [kW]	Gear unit	i[19]
6033-227/44URG/YRG	227	4,5	SP189	6,356
6033-275/44URG/YRG	275	4,5	SP189	5,250
6033-318/44URG/YRG	318	4,5	SP189	4,545
6033-354/44URG/YRG	354	4,5	SP189	4,143
6033-354/64URG/YRG	354	6,5	SP189	4,143
6033-405/44URG/YRG	405	4,5	SP189	3,618
6033-405/64URG/YRG	405	6,5	SP189	3,618

Size	$n_{eff.}$ [rpm]	P_2 [kW]	Gear unit	i[19]
6033-405/114URG/YRG	405	10,0	SP189	3,618
6033-453/44URG/YRG	453	4,5	SP189	3,232
6033-453/64URG/YRG	453	6,5	SP189	3,232
6033-453/114URG/YRG	453	10,0	SP189	3,232
6033-483/64URG/YRG	483	6,5	SP189	3,036
6033-483/114URG/YRG	483	10,0	SP189	3,036
6033-526/64URG/YRG	526	6,5	SP189	2,784
6033-526/114URG/YRG	526	10,0	SP189	2,784

1594.51/09-EN

19 Transmission ratio

Amaline 6035- _ _ _, motors: 17 2, 25 2, 11 4, 16 4

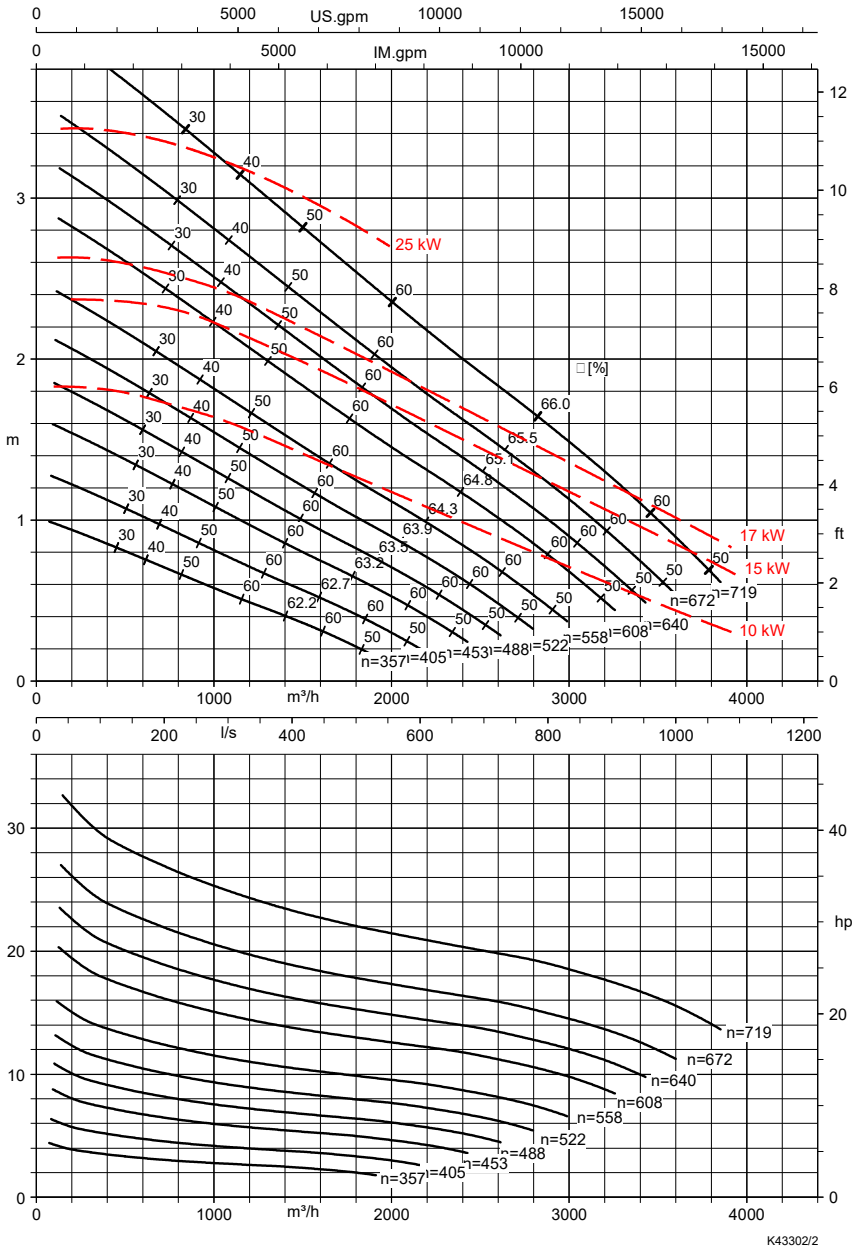

Free passage = 200 mm

Table 28: Speed $n_{Eff.}$ and motor rating P_2

Size	$n_{Eff.}$ [rpm]	P_2 [kW]	Gear unit	i[20]
6035-357/164URG/YRG	357	15,0	SP190	4,104
6035-405/164URG/YRG	405	15,0	SP190	3,618
6035-453/114URG/YRG	453	10,0	SP189	3,232
6035-488/172URG/YRG	488	17,0	SP190	6,051
6035-522/172URG/YRG	522	17,0	SP190	5,654
6035-558/172URG/YRG	558	17,0	SP190	5,294
6035-608/172URG/YRG	608	17,0	SP190	4,856
6035-608/252URG/YRG	608	25,0	SP190	4,856
6035-640/172URG/YRG	640	17,0	SP190	4,616
6035-640/252URG/YRG	640	25,0	SP190	4,616
6035-672/172URG/YRG	672	17,0	SP190	4,392
6035-672/252URG/YRG	672	25,0	SP190	4,392
6035-719/252URG/YRG	719	25,0	SP190	4,104

20 Transmission ratio

Amaline 8032- _ _ _, motors: 4 4, 6 4, 11 4, 16 4, 23 4, 30 4

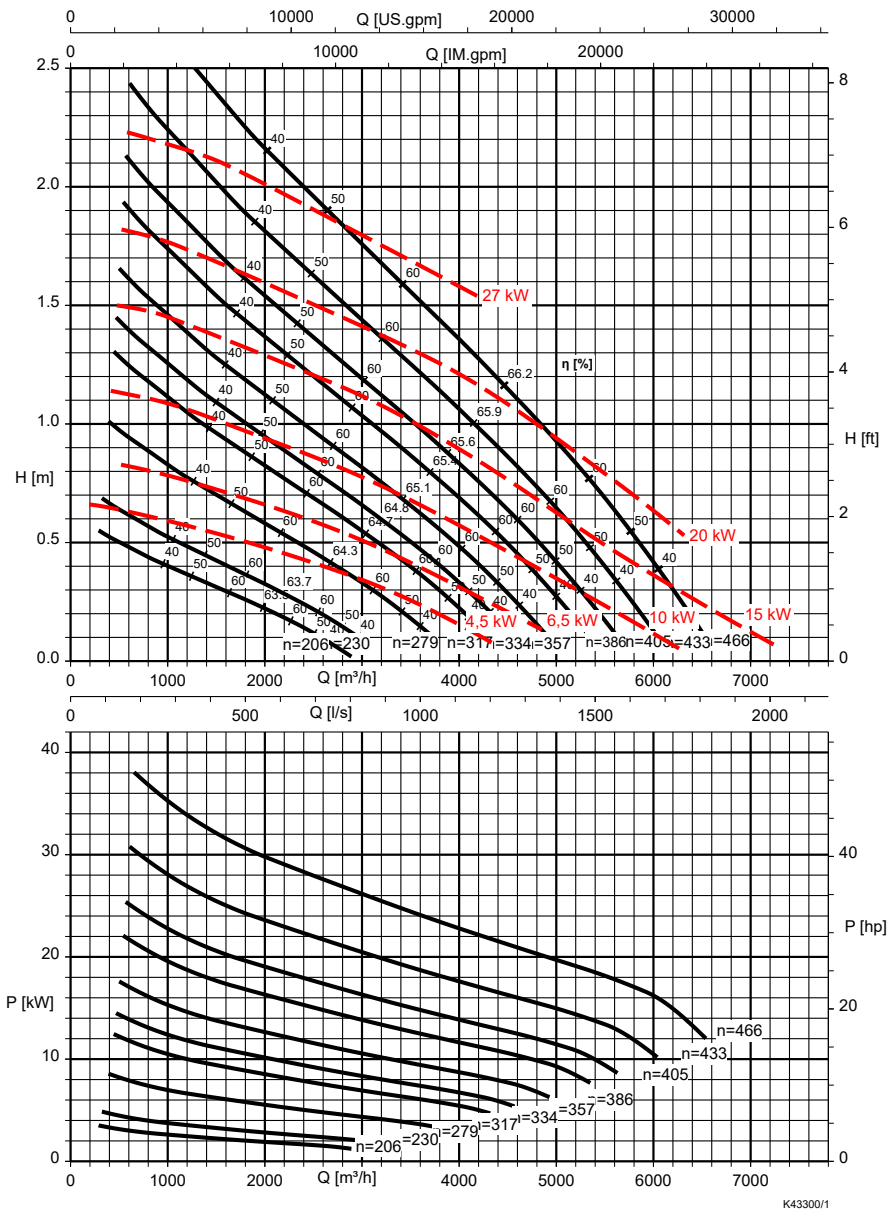

Free passage = 260 mm

Table 29: Speed $n_{eff.}$ and motor rating P_2

Size	$n_{eff.}$ [rpm]	P_2 [kW]	Drive with gear unit	i[21)]
8032-206/44URG/YRG	206	4,5	SP189	7,116
8032-230/44URG/YRG	230	4,5	SP189	6,363
8032-230/64URG/YRG	230	6,5	SP189	6,363
8032-279/64URG/YRG	279	6,5	SP189	5,250
8032-279/114URG/YRG	279	10,0	SP189	5,250
8032-317/164URG/YRG	317	15,0	SP190	4,616
8032-334/164URG/YRG	334	15,0	SP190	4,392
8032-357/164URG/YRG	357	15,0	SP190	4,104
8032-357/234URG/YRG	357	20,0	SP190	4,104
8032-386/164URG/YRG	386	15,0	SP190	3,797
8032-386/234URG/YRG	386	20,0	SP190	3,797
8032-405/234URG/YRG	405	20,0	SP190	3,620
8032-405/304URG/YRG	405	27,0	SP190	3,620
8032-433/234URG/YRG	433	20,0	SP190	3,384
8032-433/304URG/YRG	433	27,0	SP190	3,384
8032-466/234URG/YRG	466	20,0	SP190	3,145
8032-466/304URG/YRG	466	27,0	SP190	3,145

21 Transmission ratio

1594.51/09-EN

Amaline 8038- _ _ _, motors: 4 4, 6 4, 11 4, 16 4, 23 4, 30 4

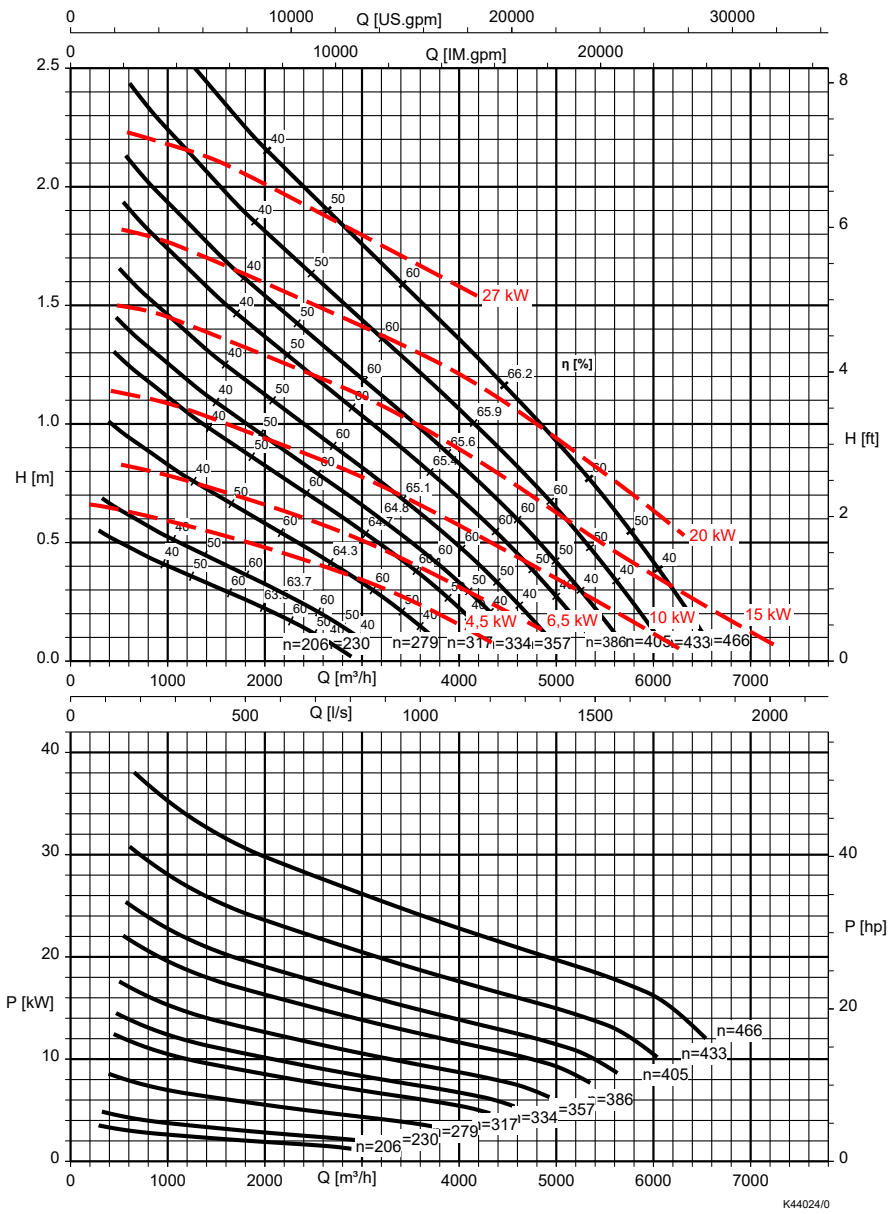

Free passage = 260 mm

Table 30: Speed $n_{eff.}$ and motor rating P_2

Size	$n_{eff.}$ [rpm]	P_2 [kW]	Drive with gear unit	i[22)]
8038-206/44URG/YRG[23)]	206	4,5	SP189	7,116
8038-230/44URG/YRG[23)]	230	4,5	SP189	6,363
8038-230/64URG/YRG[23)]	230	6,5	SP189	6,363
8038-279/64URG/YRG[23)]	279	6,5	SP189	5,250
8038-279/114URG/YRG[23)]	279	10,0	SP189	5,250
8038-317/164URG/YRG[23)]	317	15,0	SP190	4,616
8038-334/164URG/YRG[23)]	334	15,0	SP190	4,392
8038-357/164URG/YRG[23)]	357	15,0	SP190	4,104
8038-357/234URG/YRG[23)]	357	20,0	SP190	4,104
8038-386/164URG/YRG[23)]	386	15,0	SP190	3,797
8038-386/234URG/YRG[23)]	386	20,0	SP190	3,797

Size	$n_{eff.}$ [rpm]	P_2 [kW]	Drive with gear unit	i[23)]
8038-405/234URG/YRG[23)]	405	20,0	SP190	3,620
8038-405/304URG/YRG[23)]	405	27,0	SP190	3,620
8038-433/234URG/YRG[23)]	433	20,0	SP190	3,384
8038-433/304URG/YRG[23)]	433	27,0	SP190	3,384
8038-466/234URG/YRG[23)]	466	20,0	SP190	3,145
8038-466/304URG/YRG[23)]	466	27,0	SP190	3,145

23 Axial propeller suitable for problematic waste water containing long fibres
23 Transmission ratio

Dimensions

Amaline 200, 300, 400; motor housing made of grey cast iron

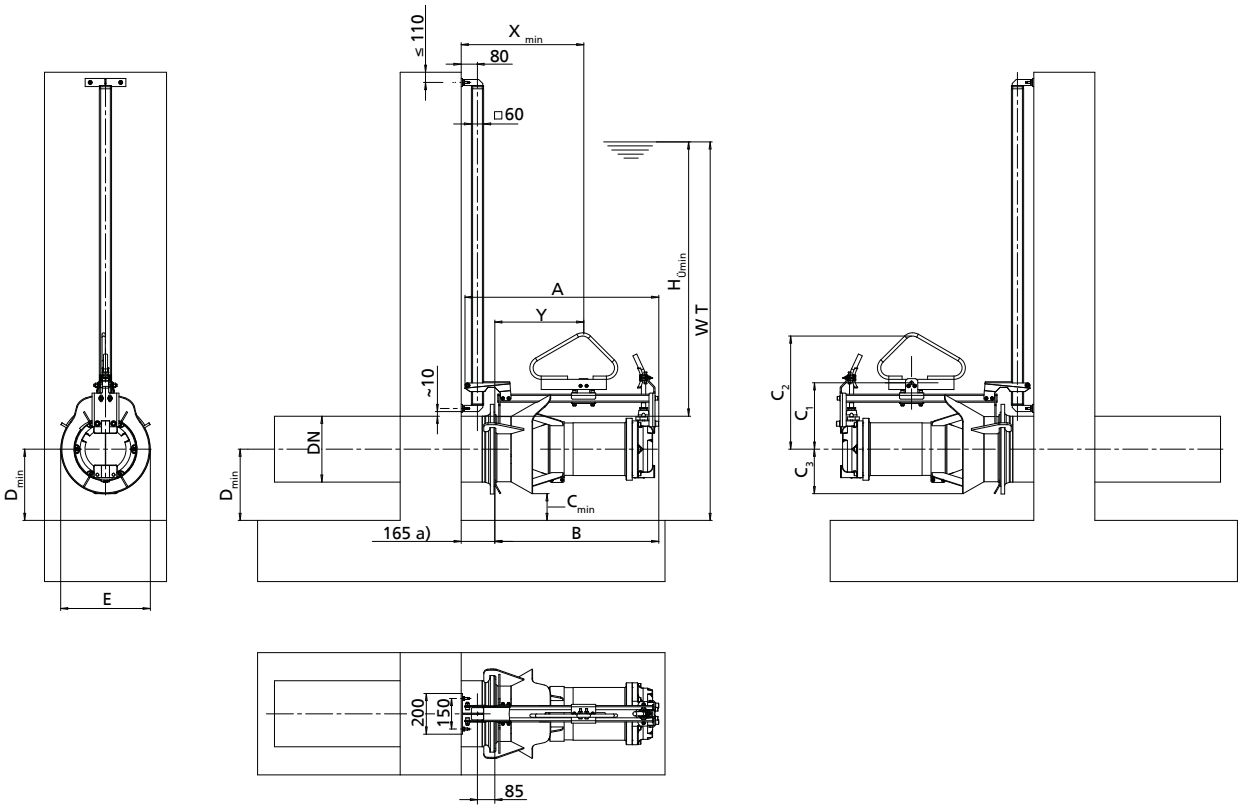

Fig. 8: Dimensions of an Amaline 200, 300, 400; motor housing made of grey cast iron

a)	Minimum

The tolerances of the connection pipe (flange diameter and flange thickness) must be observed to ensure smooth functioning. If required, the flanges must be reworked prior to installation. (⇨ Page 39)

Table 31: Dimensions [mm]

Size	A	B	C_{min}	C_1	C_2	C_3	D_{min}	E	$Hü_{min}$	W_T	X_{min}	Y	[kg]
Amaline 200													
2021-1450/14	709	568	112	193	363	168	280	331	400	780	465	300	45,4
2022-1450/14	721	580	112	193	363	168	280	331	400	780	465	300	45,4
2022-1450/24	721	580	112	193	363	168	280	331	400	780	470	300	47
2034-1450/24	709	568	112	193	363	168	280	331	400	780	470	300	47
2035-1450/24	721	580	112	193	363	168	280	331	400	780	470	300	47
Amaline 300													
3021-960/06	778	637	130	243	458	220	350	436	500	1000	545	380	58,5
3022-960/06	784	643	130	243	458	220	350	436	500	1000	545	380	58,5
3022-960/26	784	643	130	243	458	220	350	436	500	1000	545	380	58,5
3031-960/06	778	637	130	243	458	220	350	436	500	1000	545	380	58,5
3031-960/26	778	637	130	243	458	220	350	436	500	1000	545	380	58,5
3032-960/06	784	643	130	243	458	220	350	436	500	1000	545	380	58,5
3032-960/26	784	643	130	243	458	220	350	436	500	1000	545	380	58,5
3033-960/06	796	655	130	243	458	220	350	436	500	1000	545	380	58,5
3033-960/26	796	655	130	243	458	220	350	436	500	1000	545	380	58,5
3034-960/86	957	820	131	326	556	219	350	438	500	1000	555	390	169,5
3035-960/86	963	826	131	326	556	219	350	438	500	1000	555	390	169,5
3036-960/86	969	832	131	326	556	219	350	438	500	1000	555	390	169,5
Amaline 400													
4021-725/38	867	726	135	283	498	265	400	524	600	1200	605	440	92,5

Size	A	B	C_{min}	C_1	C_2	C_3	D_{min}	E	$Hü_{min}$	W_T	X_{min}	Y	[kg]
4022-725/38	873	732	135	283	498	265	400	524	600	1200	605	440	92,5
4022-725/48	873	732	135	283	498	265	400	524	600	1200	605	440	92,5
4031-725/38	867	726	135	283	498	265	400	524	600	1200	605	440	92,5
4031-725/48	867	726	135	283	498	265	400	524	600	1200	605	440	92,5
4032-725/38	873	732	135	283	498	265	400	524	600	1200	605	440	92,5
4032-725/48	873	732	135	283	498	265	400	524	600	1200	605	440	92,5
4033-725/38	885	744	135	283	498	265	400	524	600	1200	605	440	92,5
4033-725/48	885	744	135	283	498	265	400	524	600	1200	605	440	92,5

Amaline 200, 300, 400; motor housing made of stainless steel

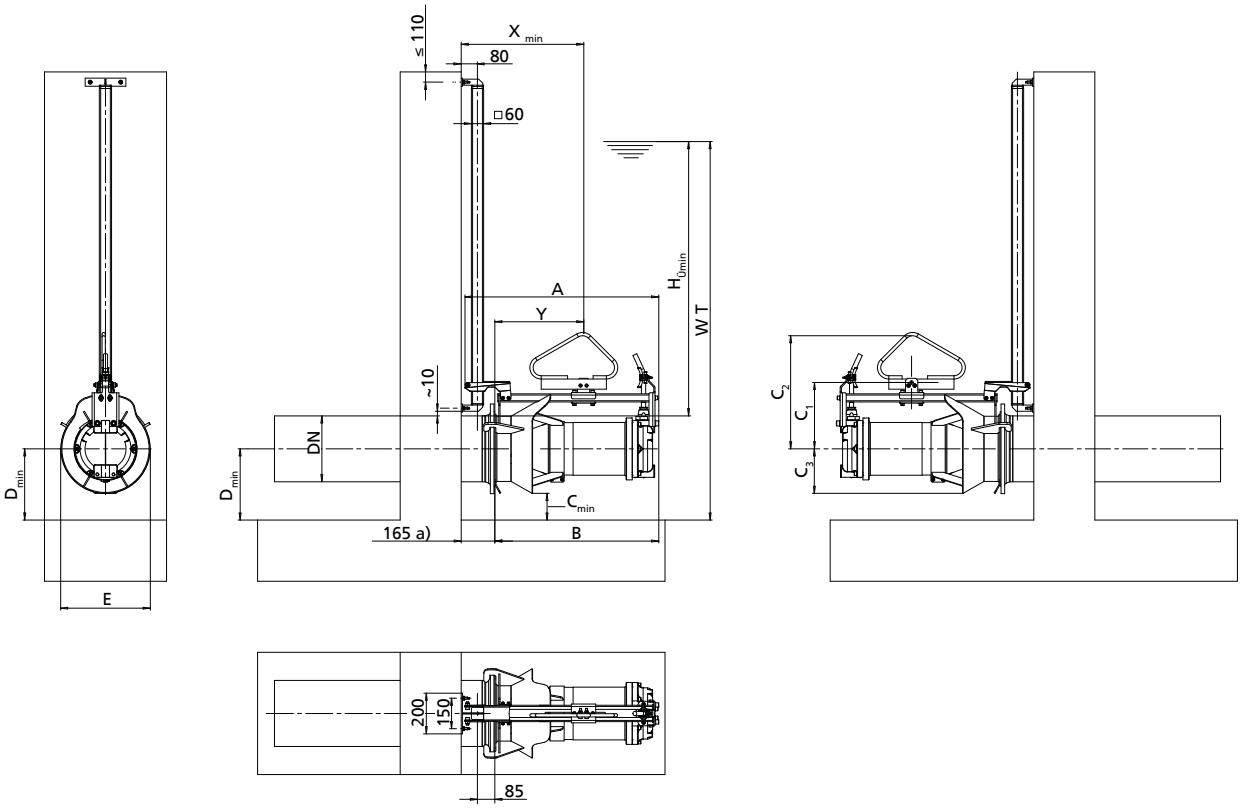

Fig. 9: Dimensions of an Amaline 200, 300, 400; motor housing made of stainless steel

a)	Minimum

The tolerances of the connection pipe (flange diameter and flange thickness) must be observed to ensure smooth functioning. If required, the flanges must be reworked prior to installation. (⇨ Page 39)

Table 32: Dimensions [mm]

Size	A	B	C_{min}	C_1	C_2	C_3	D_{min}	E	$Hü_{min}$	W_T	X_{min}	Y	[kg]
Amaline 200													
2021-1450/14	707	566	112	193	363	168	280	332	400	780	465	300	45,2
2022-1450/14	719	578	112	193	363	168	280	332	400	780	465	300	45,2
2022-1450/24	719	578	112	193	363	168	280	332	400	780	470	300	47,6
2034-1450/24	707	566	112	193	363	168	280	332	400	780	470	300	47,6
2035-1450/24	719	578	112	193	363	168	280	332	400	780	470	300	47,6
Amaline 300													
3021-960/06	778	637	130	243	458	220	350	436	500	1000	545	380	57,7
3022-960/06	784	643	130	243	458	220	350	436	500	1000	545	380	57,7
3022-960/26	784	643	130	243	458	220	350	436	500	1000	545	380	57,7
3031-960/06	778	637	130	243	458	220	350	436	500	1000	545	380	57,7
3031-960/26	778	637	130	243	458	220	350	436	500	1000	545	380	57,7
3032-960/06	784	643	130	243	458	220	350	436	500	1000	545	380	57,7
3032-960/26	784	643	130	243	458	220	350	436	500	1000	545	380	57,7
3033-960/06	796	655	130	243	458	220	350	436	500	1000	545	380	57,7
3033-960/26	796	655	130	243	458	220	350	436	500	1000	545	380	57,7
Amaline 400													
4021-725/38	867	726	135	283	498	265	400	524	600	1200	605	440	90,6
4022-725/38	873	732	135	283	498	265	400	524	600	1200	605	440	90,6
4022-725/48	873	732	135	283	498	265	400	524	600	1200	605	440	90,6
4031-725/38	867	726	135	283	498	265	400	524	600	1200	605	440	90,6
4031-725/48	867	726	135	283	498	265	400	524	600	1200	605	440	90,6
4032-725/38	873	732	135	283	498	265	400	524	600	1200	605	440	90,6

1594.51/09-EN

Size	A	B	C_{min}	C_1	C_2	C_3	D_{min}	E	$Hü_{min}$	W_T	X_{min}	Y	[kg]
4032-725/48	873	732	135	283	498	265	400	524	600	1200	605	440	90,6
4033-725/38	885	744	135	283	498	265	400	524	600	1200	605	440	90,6
4033-725/48	885	744	135	283	498	265	400	524	600	1200	605	440	90,6

1594.51/09-EN

Amaline 500, 600, 800; motor housing made of grey cast iron

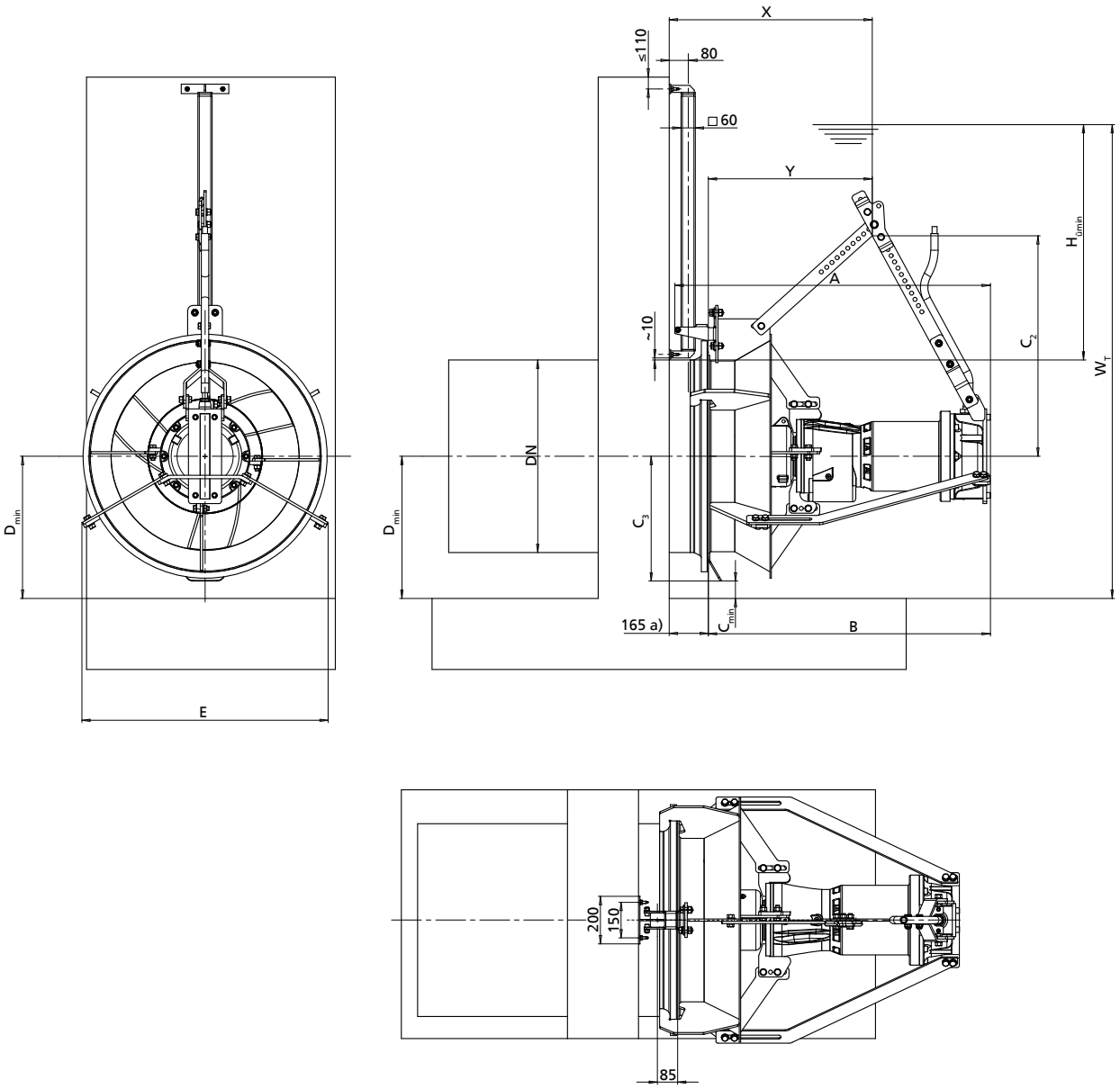

Fig. 10: Dimensions of an Amaline 500, 600, 800; motor housing made of grey cast iron

a)	Minimum

The tolerances of the connection pipe (flange diameter and flange thickness) must be observed to ensure smooth functioning. If required, the flanges must be reworked prior to installation. (⇨ Page 39)

Table 33: Dimensions [mm]

Size	A	B	C_{min}	C_2	C_3	D_{min}	E	$Hü_{min}$	W_T	X_{min}	Y	[kg]
Amaline 500												
5033-... / 4 4...	1346	1205	70	945	380	450	768	700	1400	815	650	240,5
5033-... / 6 4…	1436	1295	70	910	380	450	768	700	1400	855	690	276
5033-... / 11 4…	1436	1295	70	910	380	450	768	700	1400	855	690	276
5035-... / 4 4…	1314	1173	70	945	380	450	768	700	1400	825	660	239
5035-... / 6 4...	1404	1263	70	905	380	450	768	700	1400	865	700	274,5
5033-... / 17 2...	1404	1263	70	905	380	450	768	700	1400	865	700	306,5
Amaline 600												
6032-... / 4 4...	1346	1205	75	980	425	500	838	900	1700	835	670	248,5
6032-... / 6 4...	1436	1295	75	950	425	500	838	900	1700	860	695	284
6032-... / 11 4...	1436	1295	75	950	425	500	838	900	1700	860	695	284
6033-... / 4 4...	1346	1205	75	980	425	500	838	900	1700	835	670	248,5
6033-... / 6 4...	1436	1295	75	950	425	500	838	900	1700	860	695	284
6033-... / 11 4...	1436	1295	75	950	425	500	838	900	1700	860	695	284
6035-... / 11 4...	1368	1228	75	980	425	500	838	900	1700	825	660	284
6035-... / 16 4...	1400	1259	75	945	425	500	838	900	1700	815	650	315,6
6035-... / 17 2...	1400	1259	75	945	425	500	838	900	1700	815	650	315
6035-... / 25 2...	1400	1259	75	945	425	500	838	900	1700	815	650	332
Amaline 800												
8032-... / 4 4...	1239	1098	73	1000	527	600	1037	1100	2100	795	630	270
8032-... / 6 4...	1331	1190	73	1000	527	600	1037	1100	2100	935	770	305,5
8032-... / 11 4...	1331	1190	73	1000	527	600	1037	1100	2100	935	770	305,5
8032-... / 16 4...	1369	1228	73	990	527	600	1037	1100	2100	945	780	337,5
8032-... / 23 4...	1369	1228	73	990	527	600	1037	1100	2100	945	780	349,5
8032-... / 30 4...	1331	1250	73	1060	527	600	1037	1100	2100	885	720	397
8038-... / 4 4...	1239	1098	73	1000	527	600	1037	1100	2100	795	630	270
8038-... / 6 4...	1331	1190	73	1000	527	600	1037	1100	2100	935	770	305,5
8038-... / 11 4...	1331	1190	73	1000	527	600	1037	1100	2100	935	770	305,5
8038-... / 16 4...	1369	1228	73	990	527	600	1037	1100	2100	945	780	337,5
8038-... / 23 4...	1369	1228	73	990	527	600	1037	1100	2100	945	780	349,5
8038-... / 30 4...	1391	1250	73	1060	527	600	1037	1100	2100	885	720	397

Scope of supply

Depending on the model, the following items are included in the scope of supply:

- Pump set, complete with power cable
- Shackle
- Bail

Using a bail is recommended when the lifting rope of the crane will not remain attached to the attachment point of the pump set during operation; instead, the pump set will be pulled up or lowered by means of a hook.[24)]

Accessories

- Depending on the model the installation parts consist of:
  - Guide rail
  - Mounting brackets
  - Middle support
- Connecting pipe
- Cable support for properly routing the power cable
- Other accessories on request

24 For Amaline 200, 300, 400 only

Accessories

Forcing screws

Table 34: Forcing screws

Amaline	Forcing screw		Mat. No.	[kg]
200	M16 × 60	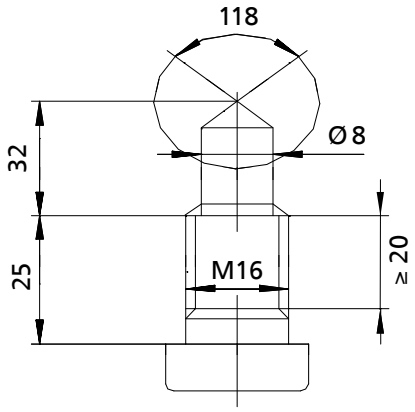	11197135	0.1
300, motors: 0 6, 2 6			11197135	0.1
400			11197135	0.1
300, motors: 8 6, 11 6	M20 × 95	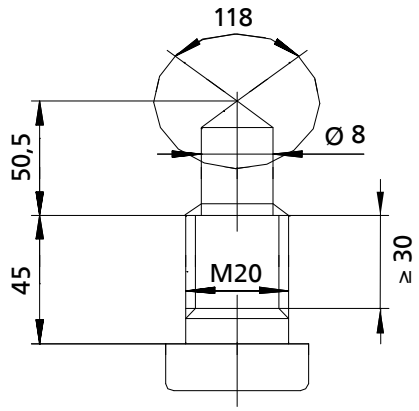	11197784	0.25
600			11197784	0.25
800			11197784	0.25

1594.51/09-EN

Installation accessories

Overview of installation accessories

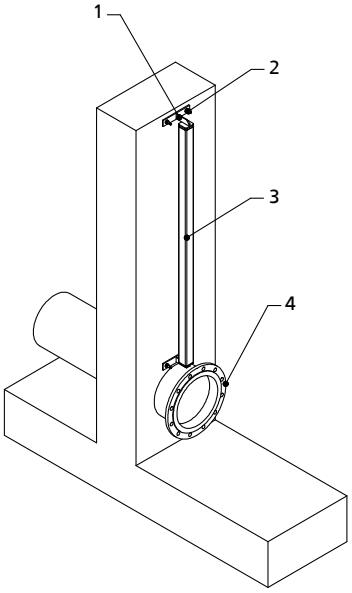

Fig. 11: Overview of installation accessories

1	Holder
2	Chemical anchor M10 × 130
3	Guide rail
4	Connection pipe

Fastening elements for the guide rail

Fastening elements for a guide rail < 6 m without middle support

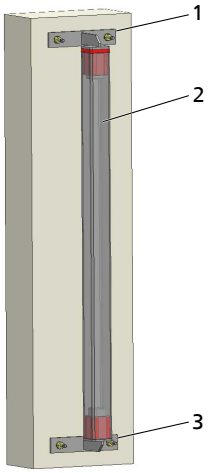

Fig. 12: Guide rail length < 6 m

1	Holder
2	Guide rail 60 x 60 x 3 mm

Fastening elements for a guide rail > 6 m with middle support

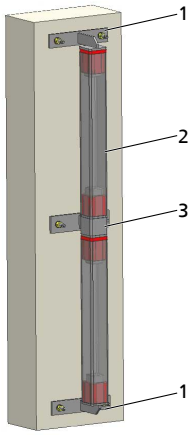

Fig. 13: Guide rail length > 6 m

1	Holder
2	Guide rail 60 x 60 x 3 mm
3	Middle support

Table 35: Overview of fastening elements for the guide rail

Description	Pipe length [m]	Material	Mat. No.	[kg]
Fastening element for a guide rail 60 x 60 x 3 mm without middle support for mounting on the tank wall, incl. chemical anchors M10 x 130	6	1.4571	01428145	2.5
Fastening element for a guide rail 60 x 60 x 3 mm with middle support for mounting on the tank wall, incl. chemical anchors M10 x 130	6 - 12	1.4571	01428146	4.4

Guide rails

The guide rail length required depends on the water level. They are supplied in standard lengths of 3 m and 6 m. If the top of the guide rail is fastened to the tank edge, select the guide rail length accordingly. If necessary, shorten the guide rails at the site. For larger installation depths, extend the guide rails by adding guide rail extensions of 3 m or 6 m length at the site. Welding and subsequent treatment must be performed at the site in accordance with the relevant regulations. To allow smooth lifting and lowering of the submersible motor pumps, grind the weld seam at the outside of the guide rail down to a max. projection of 0.5 mm. For guide rail lengths > 6 m using a middle support is recommended.

Table 36: Overview of guide rails

	Description	Pipe length [m]	Material	Mat. No.	[kg]
	Guide rail 60 x 60 x 3 mm	3,0	1.4571	11304011	15.7
	Guide rail 60 x 60 x 3 mm	6,0	1.4301	11304596	31.3
	Guide rail 60 x 60 x 3 mm	6,0	1.4571	11304597	31.3

Connecting pipe

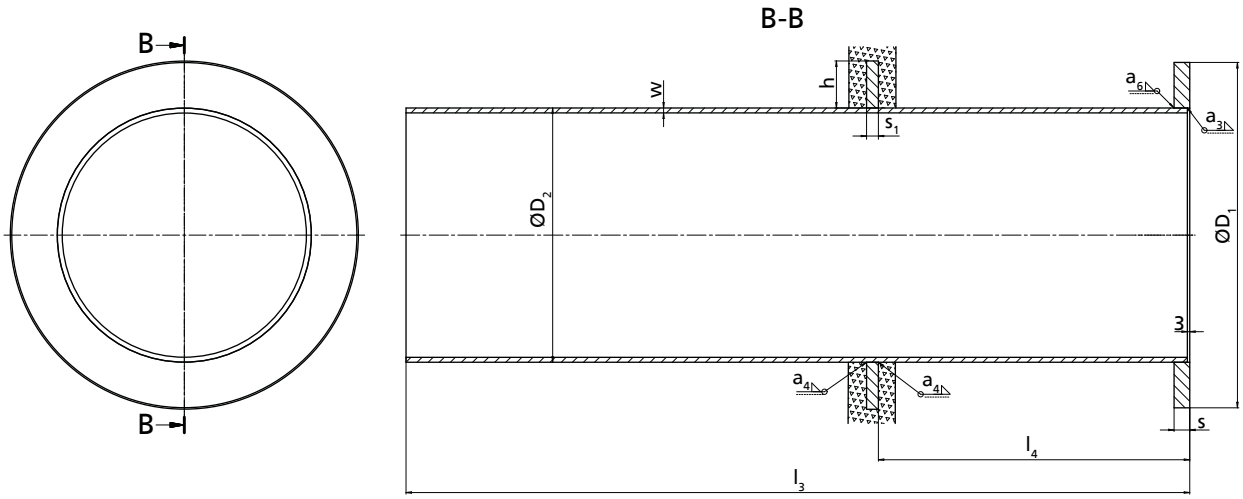

Fig. 14: Dimensions of the connection pipe (l_3, l_4 = order specifications provided to the manufacturer by the customer)

Prior to installation all dimensions including the indicated tolerances (especially the flange diameter and thickness) must be verified and, if required, adjusted by reworking.

Table 37: Dimensions of the connection pipe [mm]

DN	Ø D_1	Ø D_2	$s_{-0.5}$	w^{+1}	s_1	h
200	320	219	20	6	10	50
300	440	324	22	6	15	60
400	540	406	22	6	15	65
500	645	508	24	6	15	70
600	755	610	30	6	15	75
800	975	813	30	6	15	80

Table 38: Material variants of the connection pipe

	Designation	DN	Material	[kg]
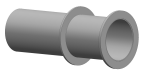	Connection pipe with flange to DIN EN 1092-1 /PN 6, length l_3 = 1 m	200	Galvanised steel	45,5
		200	1.4571	45,5
		300	Galvanised steel	75,5
		300	1.4571	75,5
		400	Galvanised steel	95,5
		400	1.4571	95,5
		500	Galvanised steel	122,5
		500	1.4571	122,5
		600	Galvanised steel	155
		600	1.4571	155
		800	Galvanised steel	217,5
		800	1.4571	217,5

Table 39: Connection pipe extension per metre

DN	Material variant		[kg]
	Galvanised steel	1.4571	
200	✗	✗	33,8
300	✗	✗	50,8
400	✗	✗	64,5
500	✗	✗	78,5
600	✗	✗	94,5
800	✗	✗	129

Cable support/carabine hook

Cable support

The cable support is used for supporting the power cable at the lifting rope or tank edge (one included in standard scope of supply; additional or spare cable supports available).

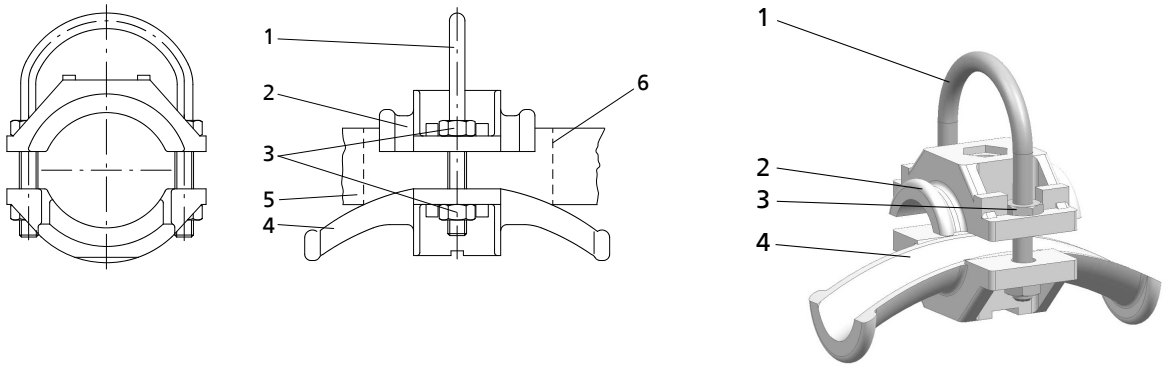

Illustration of cable support

1	Bail
2	Moulded part made of polypropylene
3	Hexagon nut made of A4

4	Moulded part made of polypropylene
5	Power cable with defined diameter[25)]
6	Rubber pad

For power cable diameters ≤ 10 or 17 mm respectively a rubber pad is inserted to make sure the cable is clamped properly.

Carabine hook

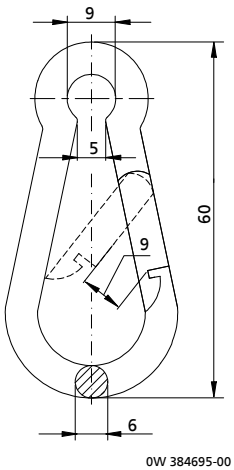

Fig. 15: Carabine hook dimensions [mm]

Table 40: Overview of cable supports/carabine hooks

Description	Suitable for motor														Material	Mat. No.	[kg]
	17 2	25 2	1 4	2 4	4 4	6 4	11 4	16 4	23 4	30 4	0 6	2 6	3 8	4 8			
Cable support, incl. carabine hooks	-	-	X[26)]	X[26)]	-	-	-	-	-	-	X[26)]	X[26)]	-	-	Cable support: plastic / A4, carabine hook: A4	19555522	0.06
Cable support, incl. carabine hooks	X[27)]	X[27)]	-	-	X[27)]	X[27)]	X[27)]	X[27)]	X[27)]	X[27)]	-	-	X[27)]	X[27)]	Cable support: plastic / A4, carabine hook: A4	19555523	0.09

1594.51/09-EN

25 Refer to the power cable data given in the motor catalogue.
26 Diameter of power cable Ø = 10 - 16 mm
27 Diameter of power cable: Ø = 17 - 25 mm

General arrangement drawings with list of components

Amaline 200 (motors: 1 4, 2 4; motor housing made of grey cast iron)

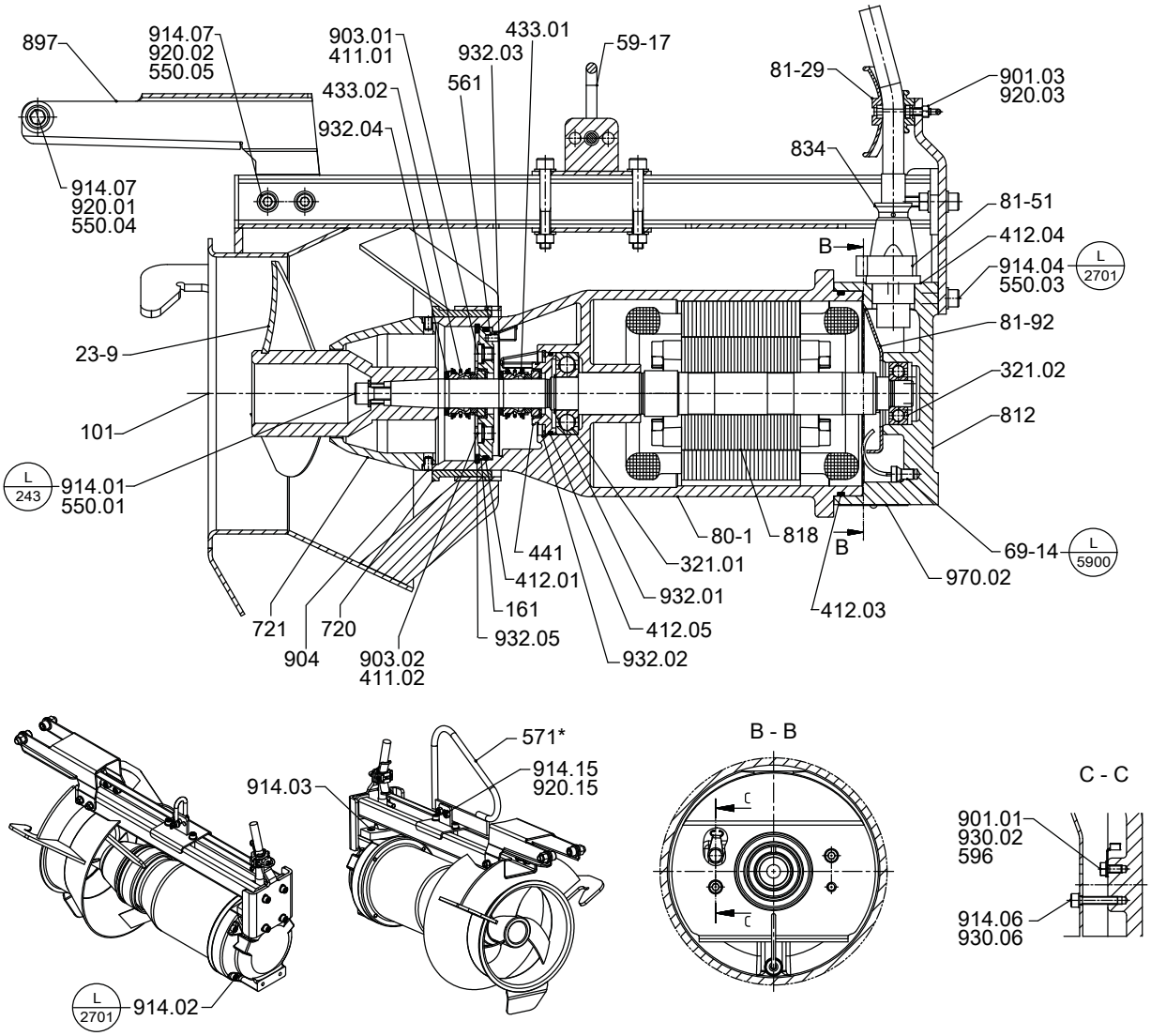

Fig. 16: General assembly drawing

*: On specific designs only

Table 41: Symbols key

Symbol	Description
L 243	Always secure screwed connections marked with this symbol with **Loctite 243** .
L 2701	Always secure screwed connections marked with this symbol with **Loctite 2701** .
L 5900	Always secure screwed connections marked with this symbol with **Loctite 5900** .

Table 42: List of components

Part No.	Description	Part No.	Description
23-9	Axial propeller	571	Bail (optional)
59-17	Shackle	596	Wire
69-14	Leakage sensor	720	Spacer
80-1	Motor unit	721	Adapter
81-29	Terminal	812	Motor housing cover
81-51	Clamping element	818	Rotor

Part No.	Description	Part No.	Description
81-92	Cover plate	834	Cable gland
101	Pump casing	897	Guide piece
161	Casing cover	901.01/.03	Hexagon head bolt
321.01/.02	Radial ball bearing	903.01/.02	Screw plug
411.01/.02	Joint ring	904	Grub screw
412.01/.03/.04/.05	O-ring	914.01/.02/.03/.04/.06/ .07/.15	Hexagon socket head cap screw
433.01/.02	Mechanical seal	920.01/.02/.03/.15	Nut
441	Shaft seal housing	930.02/.06	Safety device
550.01/.03/.04/.05	Disc	932.01/.02/.03/.04/.05	Circlip
561	Grooved pin	970.02	Label/plate

1594.51/09-EN

Amaline 200 (motors: 1 4, 2 4; motor housing made of stainless steel)

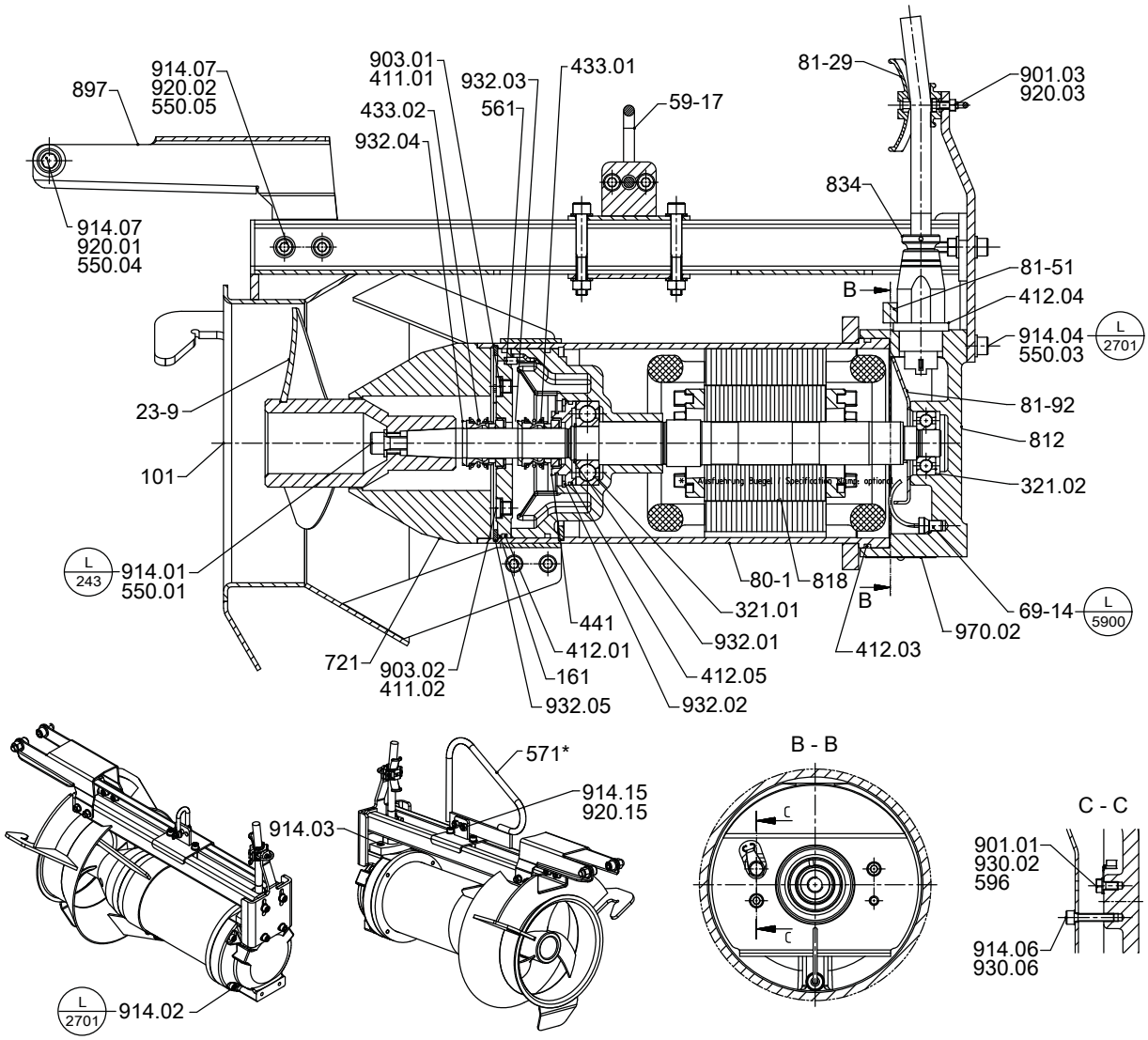

Fig. 17: General assembly drawing

*: On specific designs only

Table 43: Symbols key

Symbol	Description
L 243	Always secure screwed connections marked with this symbol with **Loctite 243** .
L 2701	Always secure screwed connections marked with this symbol with **Loctite 2701** .
L 5900	Always secure screwed connections marked with this symbol with **Loctite 5900** .

Table 44: List of components

Part No.	Description	Part No.	Description
23-9	Axial propeller	561	Grooved pin
59-17	Shackle	571	Bail (optional)
69-14	Leakage sensor	596	Wire
80-1	Motor unit	721	Adapter
81-29	Terminal	812	Motor housing cover
81-51	Clamping element	818	Rotor
81-92	Cover plate	834	Cable gland
101	Pump casing	897	Guide piece
161	Casing cover	901.01/.03	Hexagon head bolt

Part No.	Description	Part No.	Description
321.01/.02	Radial ball bearing	903.01/.02	Screw plug
411.01/.02	Joint ring	914.01/.02/.03/.04/.05/ .06/.07/.15	Hexagon socket head cap screw
412.01/.02/.03/.04/.05	Shaft seal ring	920.01/.02/.03/.15	Nut
433.01/.02	Mechanical seal	930.02/.06	Safety device
441	Shaft seal housing	932.01/.02/.03/.04/.05	Circlip
550.01/.03/.04/.05	Disc	970.02	Label/plate

Amaline 300 (motors: 0 6, 2 6; motor housing made of grey cast iron)

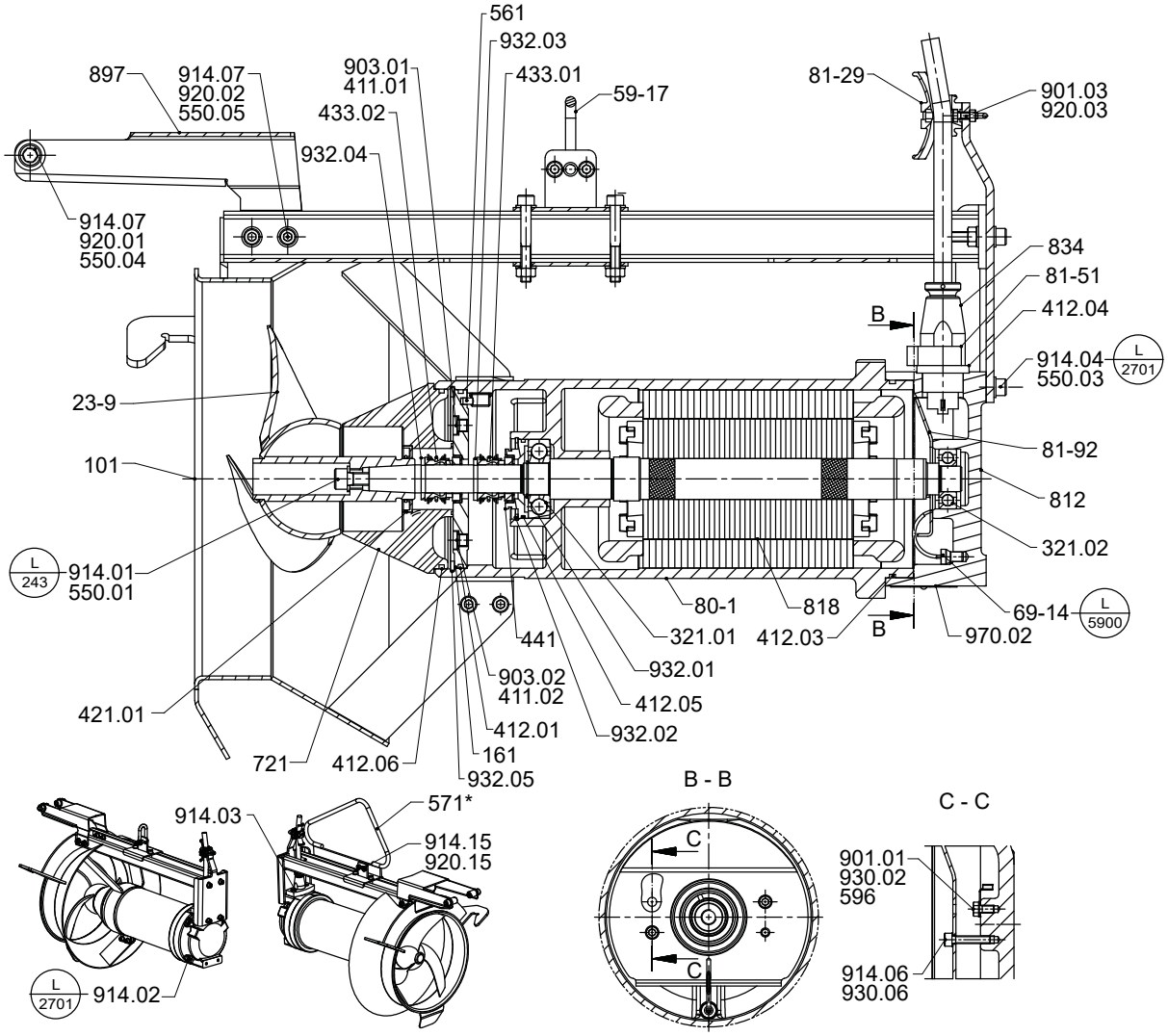

Fig. 18: General assembly drawing: a) with shackle b) with bail (optional)

*: On specific designs only

Table 45: Symbols key

Symbol	Description
L 243	Always secure screwed connections marked with this symbol with **Loctite 243** .
L 2701	Always secure screwed connections marked with this symbol with **Loctite 2701** .
L 5900	Always secure screwed connections marked with this symbol with **Loctite 5900** .

Table 46: List of components

Part No.	Description	Part No.	Description
23-9	Axial propeller	561	Grooved pin
59-17	Shackle	571	Bail (optional)
69-14	Leakage sensor	596	Wire
80-1	Motor unit	721	Adapter
81-29	Terminal	812	Motor housing cover
81-51	Clamping element	818	Rotor
81-92	Cover plate	834	Cable gland
101	Pump casing	897	Guide piece
161	Casing cover	901.01/.03	Hexagon head bolt
321.01/.02	Radial ball bearing	903.02	Screw plug

Part No.	Description	Part No.	Description
411.01/.02	Joint ring	914.01/.02/.03/.04/.05/ .06/.07/.15	Hexagon socket head cap screw
412.01/.03/.04/.05/.06/.07	O-ring	920.01/.02/.03/.15	Nut
421.01	Lip seal	930.02/.06	Safety device
433.01/.02	Mechanical seal	932.01/.02/.03/.04/.05	Circlip
441	Shaft seal housing	970.02	Label/plate
550.01/.03/.04/.05	Disc		

1594.51/09-EN

Amaline 300 (motors: 8 6; motor housing made of grey cast iron)

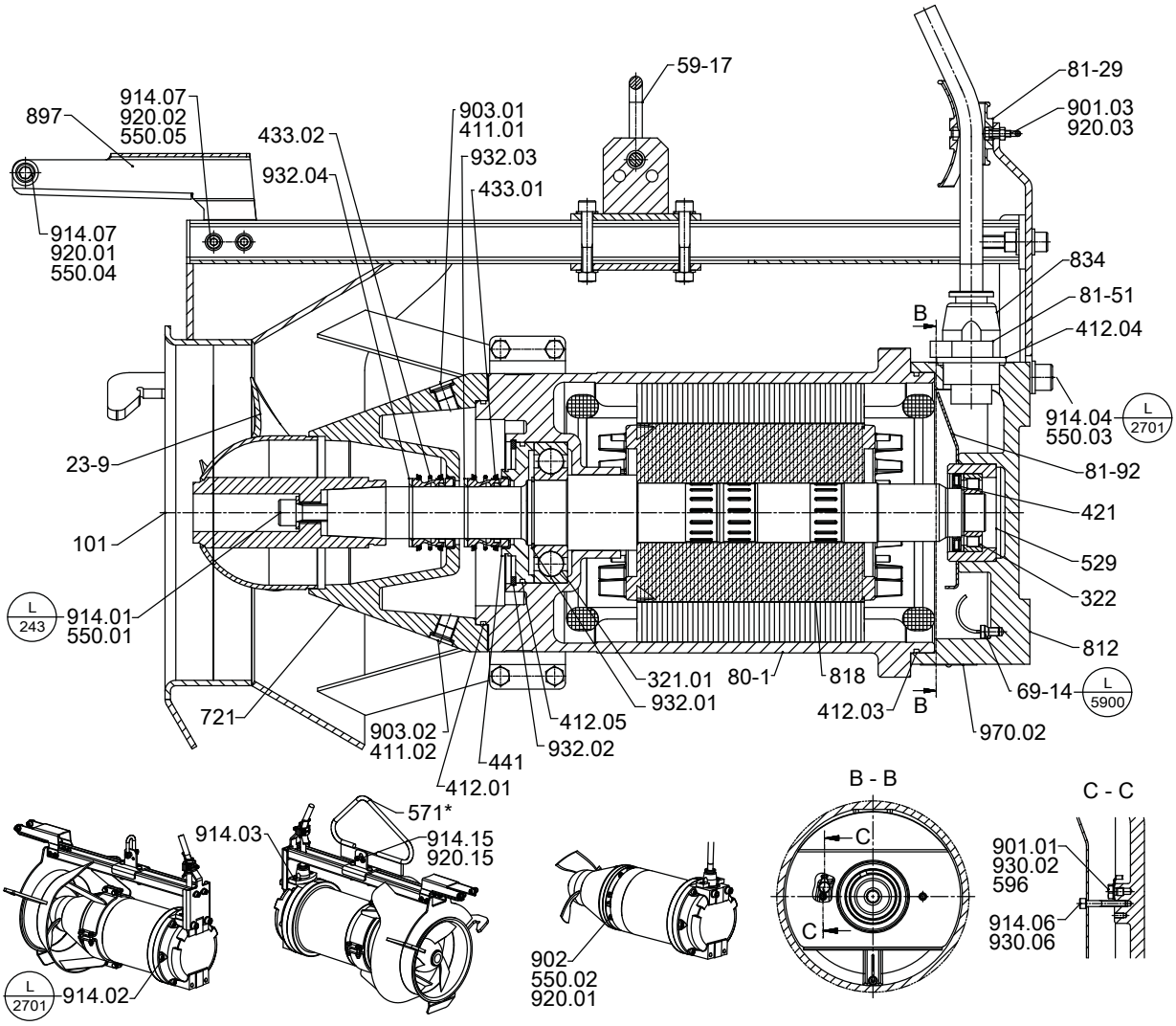

Fig. 19: General assembly drawing: a) with shackle b) with bail (optional)

*: On specific designs only

Table 47: Symbols key

Symbol	Description
L 243	Always secure screwed connections marked with this symbol with **Loctite 243** .
L 2701	Always secure screwed connections marked with this symbol with **Loctite 2701** .
L 5900	Always secure screwed connections marked with this symbol with **Loctite 5900** .

Table 48: List of components

Part No.	Description	Part No.	Description
23-9	Axial propeller	550.01/.02/.03/.04/.05	Disc
59-17	Shackle	571	Bail (optional)
69-14	Leakage sensor	596	Wire
80-1	Motor unit	721	Adapter
81-29	Terminal	812	Motor housing cover
81-51	Clamping element	818	Rotor
81-92	Cover plate	834	Cable gland
101	Pump casing	897	Guide piece
321.01	Radial ball bearing	901.01/.03	Hexagon head bolt
322	Radial roller bearing	902	Stud

Part No.	Description	Part No.	Description
411.01/.02	Joint ring	903.01/.02	Screw plug
412.01/.03/.04/.05	O-ring	914.01/.02/.03/.04/.06/ .07/.15	Hexagon socket head cap screw
421	Lip seal	920.01/.02/.03/.15	Nut
433.01/.02	Mechanical seal	930.02/.06	Safety device
441	Shaft seal housing	932.01/.02/.03/.04	Circlip
529	Bearing sleeve	970.02	Label/plate

Amaline 300 (motors: 0 6, 2 6; motor housing made of stainless steel)

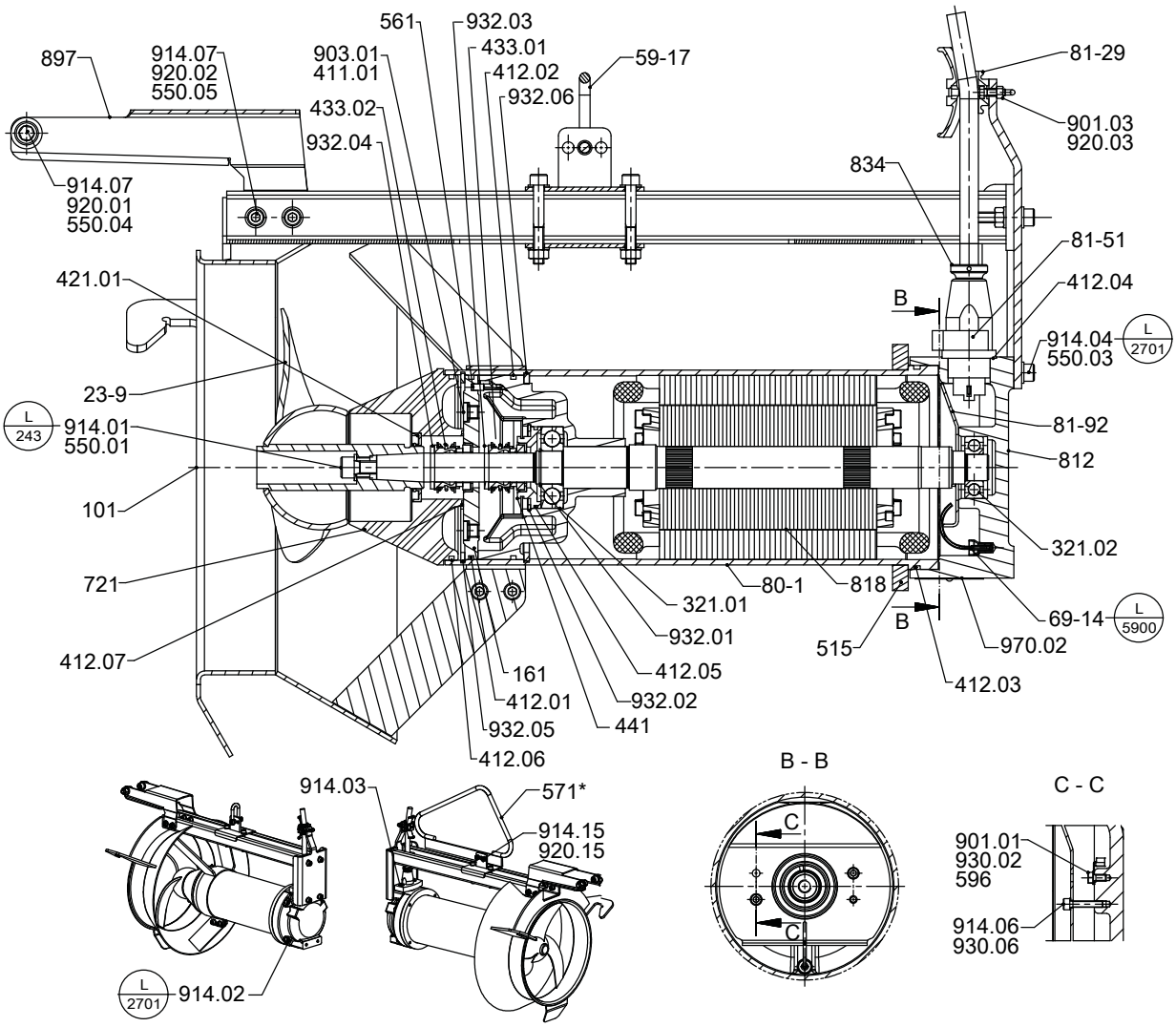

Fig. 20: General assembly drawing: a) with shackle b) with bail (optional)

*: On specific designs only

Table 49: Symbols key

Symbol	Description
L 243	Always secure screwed connections marked with this symbol with **Loctite 243** .
L 2701	Always secure screwed connections marked with this symbol with **Loctite 2701** .
L 5900	Always secure screwed connections marked with this symbol with **Loctite 5900** .

Table 50: List of components

Part No.	Description	Part No.	Description
23-9	Axial propeller	550.01/.03/.04/.05	Disc
59-17	Shackle	561	Grooved pin
69-14	Leakage sensor	571	Bail (optional)
80-1	Motor unit	596	Wire
81-29	Terminal	721	Adapter
81-51	Stator	812	Motor housing cover
81-92	Cover plate	818	Rotor
101	Pump casing	834	Cable gland
161	Casing cover	897	Guide piece
321.01/.02	Radial ball bearing	901.01/.03	Hexagon head bolt

Part No.	Description	Part No.	Description
411.01	Joint ring	903.01	Screw plug
412.01/.02/.03/.04/.05/.06/.07	O-ring	914.01/.02/.03/.04/ .06/.07/.15	Hexagon socket head cap screw
421.01	Lip seal	920.01/.02/.03/.15	Nut
433.01/.02	Mechanical seal	930.02/.06	Safety device
441	Shaft seal housing	932.01/.02/.03/.04/.05/.06	Circlip
515	Locking ring	970.02	Label/plate

Amaline 400 (motors: 3 8, 4 8; motor housing made of grey cast iron)

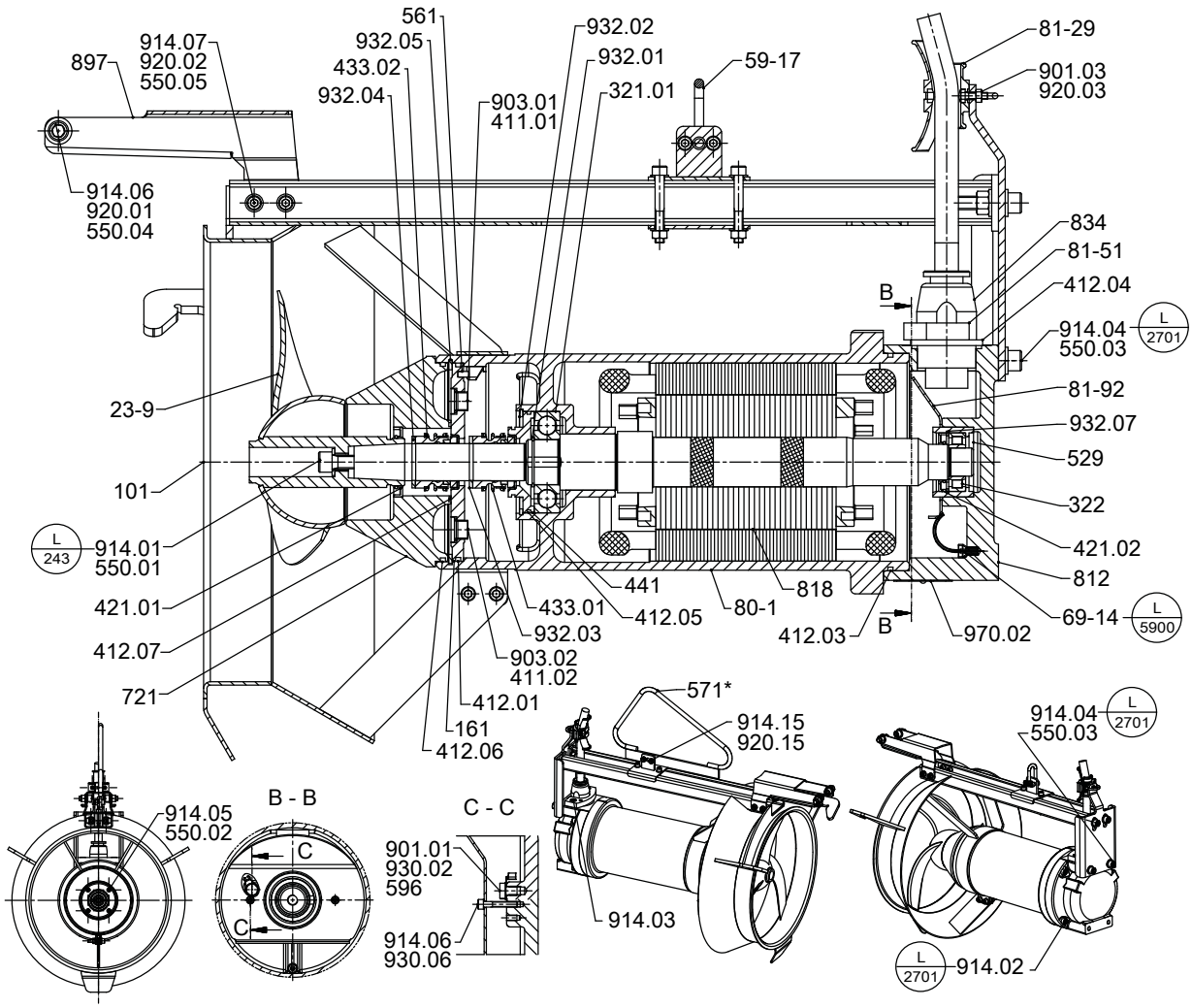

Fig. 21: General assembly drawing: a) with shackle b) with bail (optional)

*: On specific designs only

Table 51: Symbols key

Symbol	Description
L 243	Always secure screwed connections marked with this symbol with **Loctite 243** .
L 2701	Always secure screwed connections marked with this symbol with **Loctite 2701** .
L 5900	Always secure screwed connections marked with this symbol with **Loctite 5900** .

Table 52: List of components

Part No.	Description	Part No.	Description
23-9	Axial propeller	550.01/.02/.03/.04/.05	Disc
59-17	Shackle	561	Grooved pin
69-14	Leakage sensor	571	Bail (optional)
80-1	Motor unit	596	Wire
81-29	Terminal	721	Adapter
81-51	Clamping element	812	Motor housing cover
81-92	Cover plate	818	Rotor
101	Pump casing	834	Cable gland
161	Casing cover	897	Guide piece
321.01	Radial ball bearing	901.01/.03	Hexagon head bolt

Part No.	Description	Part No.	Description
322	Radial roller bearing	903.01/.02	Screw plug
411.01	Joint ring	914.01/.02/.03/.04/.05/ .06/.07/.15	Hexagon socket head cap screw
412.01/.03/.04/.05/.06/.07	O-ring	920.01/.02/.03/.15	Nut
421.01/.02	Lip seal	930.02/.06	Safety device
433.01/.02	Mechanical seal	932.01/.02/.03/.04/.05/.07	Circlip
441	Shaft seal housing	970.02	Label/plate
529	Bearing sleeve		

Amaline 400 (motors: 3 8, 4 8; motor housing made of stainless steel)

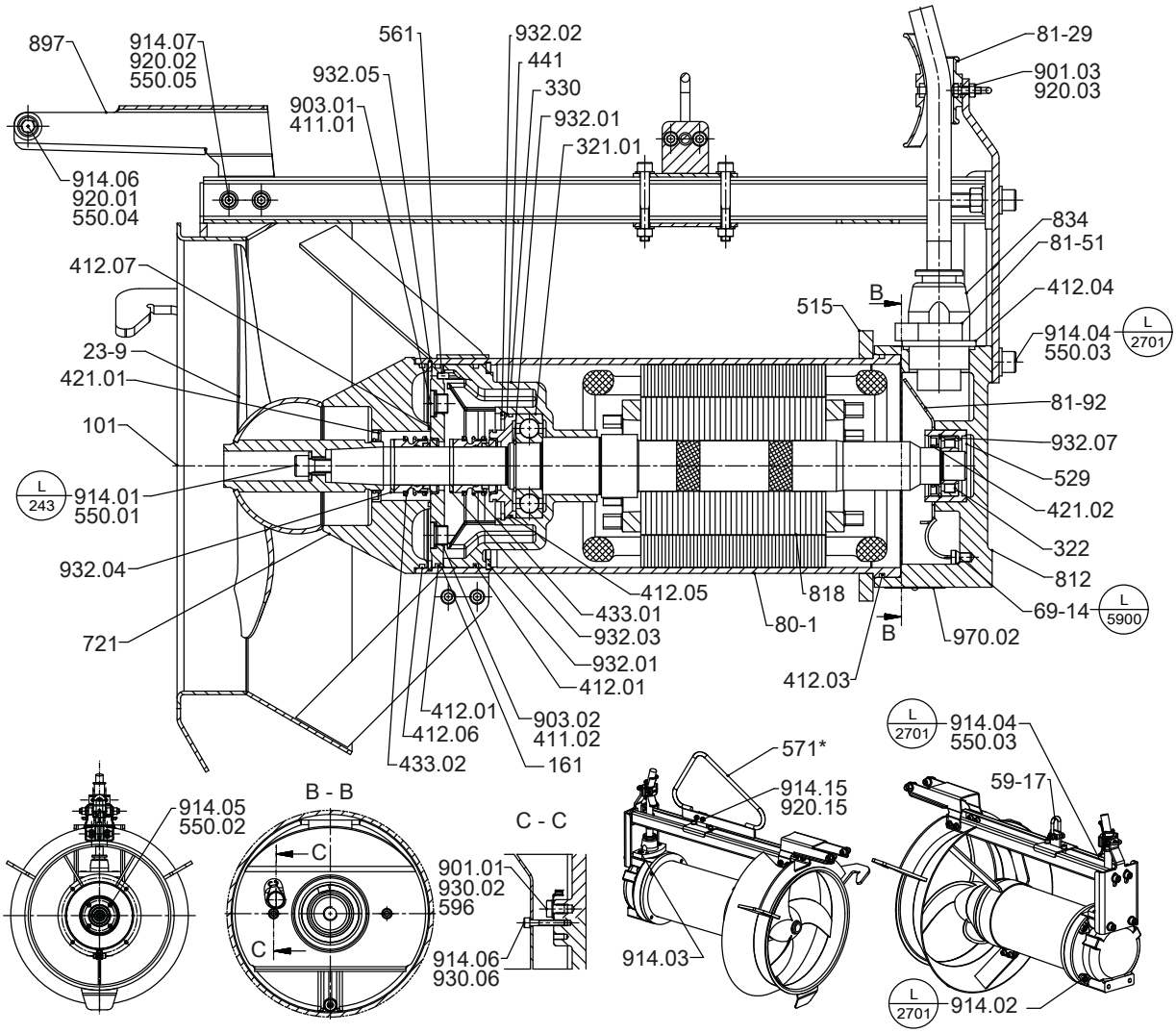

Fig. 22: General assembly drawing: a) with shackle b) with bail (optional)

*: On specific designs only

Table 53: Symbols key

Symbol	Description
L 243	Always secure screwed connections marked with this symbol with **Loctite 243** .
L 2701	Always secure screwed connections marked with this symbol with **Loctite 2701** .
L 5900	Always secure screwed connections marked with this symbol with **Loctite 5900** .

Table 54: List of components

Part No.	Description	Part No.	Description
23-9	Axial propeller	529	Bearing sleeve
59-17	Shackle	550.01/.02/.03/.04/.05	Disc
69-14	Leakage sensor	561	Grooved pin
80-1	Motor unit	571	Bail (optional)
81-29	Terminal	596	Wire
81-51	Clamping element	721	Adapter
81-92	Cover plate	812	Motor housing cover
101	Pump casing	818	Rotor
161	Casing cover	834	Cable gland
321.01	Radial ball bearing	897	Guide piece

Part No.	Description	Part No.	Description
322	Radial roller bearing	901.01/.03	Hexagon head bolt
330	Bearing bracket	903.01	Screw plug
411.01/.02	Joint ring	914.01/.02/.03/.04/.05/ .06/.07/.15	Hexagon socket head cap screw
412.01/.03/.04/.05/.06/.07	O-ring	920.01/.02/.03/.15	Nut
421.01/.02	Lip seal	930.02	Safety device
433.01/.02	Mechanical seal	932.01/.02/.03/.04/.05/.06/.07	Circlip
441	Shaft seal housing	970.02	Label/plate
515	Locking ring		

Amaline 500/600/800 (motors: 17 2, 25 2, 4 4, 6 4, 11 4, 16 4, 23 4, 30 4; motor housing made of grey cast iron)

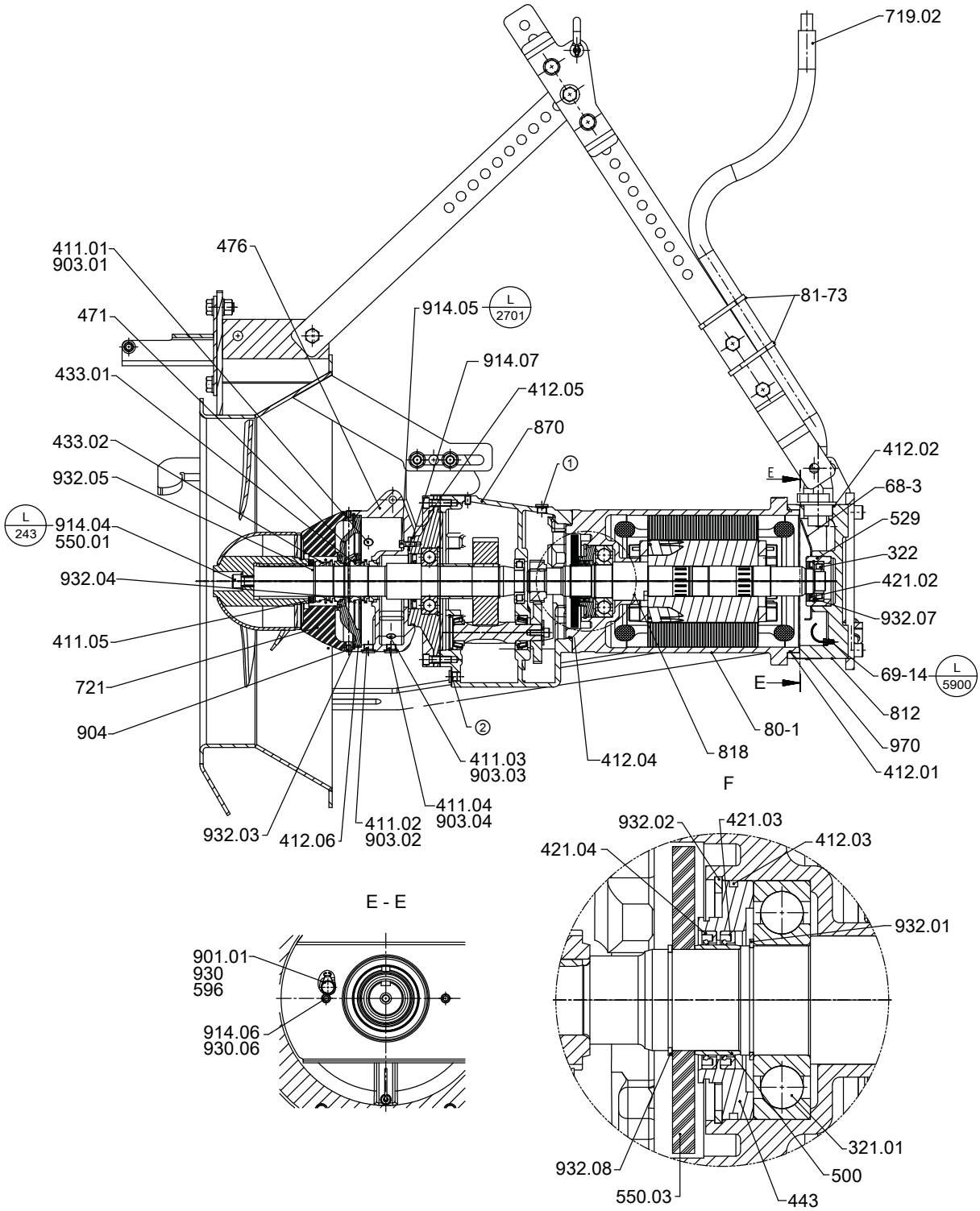

Fig. 23: General assembly drawing

①	Oil filler plug
②	Oil drain plug

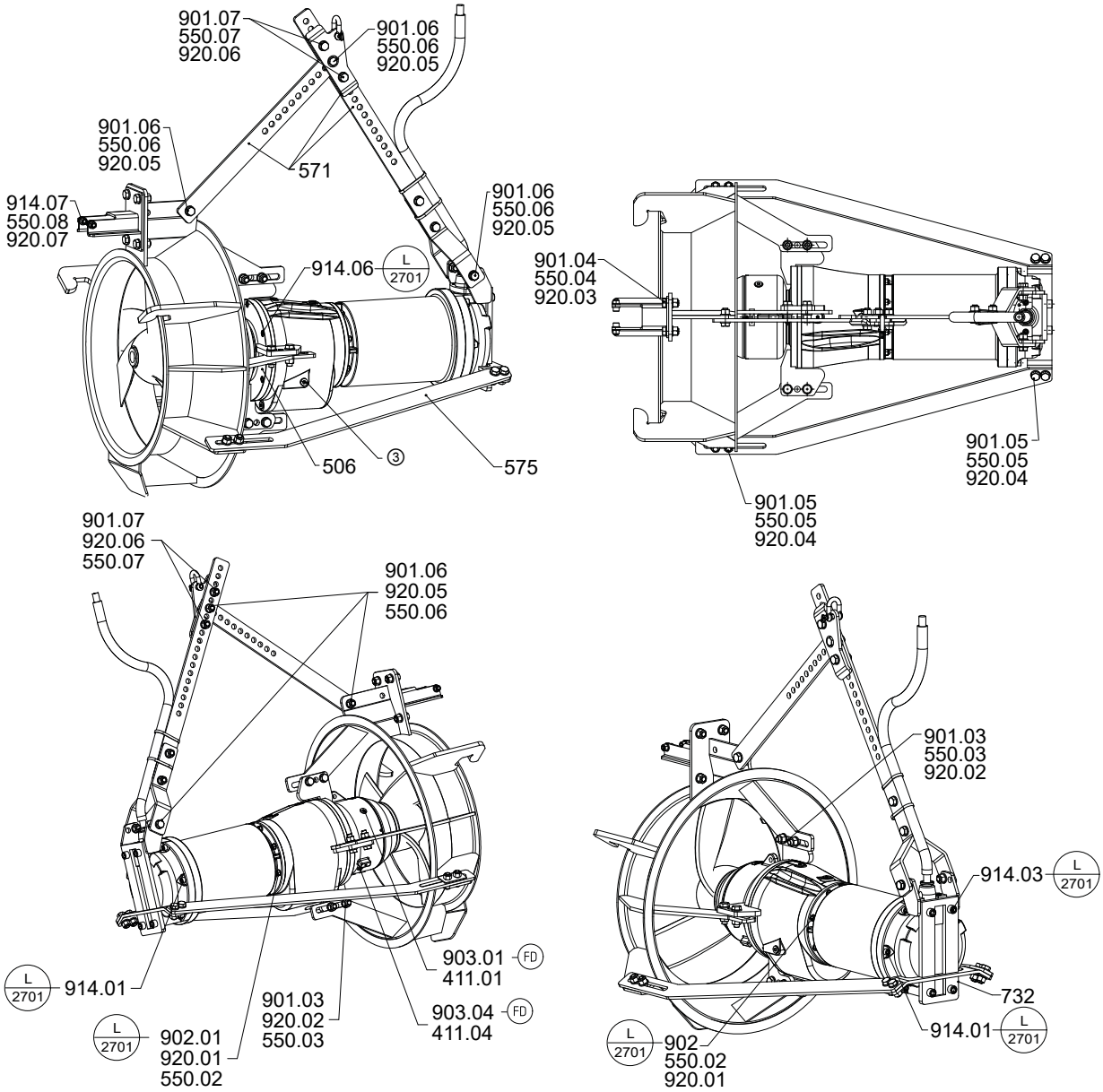

Fig. 24: Views

③	Oil check plug

Table 55: Symbols key

Symbol	Description
FD	Always apply a **liquid sealant** (e.g. Hylomar SQ32M) to sealing surfaces marked with this symbol.
L 243	Always secure screwed connections marked with this symbol with **Loctite 243** .
L 2701	Always secure screwed connections marked with this symbol with **Loctite 2701** .
L 5900	Always secure screwed connections marked with this symbol with **Loctite 5900** .

Table 56: List of components

Part No.	Description	Part No.	Description
23-9	Axial propeller	571	Bail
59-17	Shackle	575	Strip
68-3	Cover plate	596	Wire
69-14	Leakage sensor	719.02	Flexible tube

Part No.	Description	Part No.	Description
80-1	Motor unit	721 [28]	Adapter
81-51	Clamping element	732	Holder
81-73	Cable support	812	Motor housing cover
101	Pump casing	818	Rotor
321.01	Radial ball bearing	834	Cable gland
322	Radial roller bearing	870	Gear unit
411.01/.02/.03/.04/.05	Joint ring	897	Guide piece
412.01/.02/.03/.04/.05/.06	O-ring	901.01/.03/.04/.05/.06/.07	Hexagon head bolt
421.02/.03/.04	Lip seal	902	Stud
433.01/.02	Mechanical seal	903.01/.02/.03/.04	Screw plug
443	Seal insert	904	Grub screw
471	Seal cover	914.01/.02/.03/.04/.05/.06/.07	Hexagon socket head cap screw
476	Mating ring carrier	920.01/.02/.03/.04/.05/.06/.07	Nut
500	Ring	930/.06	Safety device
506	Retaining ring	932.01/.02/.03/.04/.05/.07/.08	Circlip
529	Bearing sleeve	970/970.02	Label/plate
550.01/.02/.03/.04/.05/.06/.07 /.08	Disc		

28 For Amaline 500/600 only

Glossary

Mat. No.

This identification number is composed of an 8-digit numerical code that uniquely identifies a product entered in SAP.

2024-06-25

1594.51/09-EN

LENNTECH
WATER TREATMENT SOLUTIONS
info@lenntech.com Tel. +31-152-610-900
www.lenntech.com Fax. +31-152-616-289

KSB