Thermal Oil Pump

Etaline SYT

Type Series Booklet

Legal information/Copyright

Type Series Booklet Etaline SYT

All rights reserved. The contents provided herein must neither be distributed, copied, reproduced, edited or processed for any other purpose, nor otherwise transmitted, published or made available to a third party without the manufacturer's express written consent.

Subject to technical modification without prior notice.

© KSB SE & Co. KGaA, Frankenthal 2024-03-12

Contents

Centrifugal Pumps with Shaft Seal ... 4
Thermal Oil Pumps / Hot Water Pumps ... 4
Etaline SYT ... 4
Main applications ... 4
Fluids handled ... 4
Further information on fluids handled ... 4
Operating data ... 4
Design details ... 5
Designation ... 7
Materials ... 8
Coating and preservation ... 8
Product benefits ... 8
Acceptance tests and warranty ... 8
Overview of product features / selection tables ... 9
Overview of variants ... 9
Overview of fluids handled ... 9
Overview of functions for variable speed version ... 10
Pressure and temperature limits ... 11
Technical data ... 11
Etaline SYT ... 11
Selection charts ... 12
Etaline SYT (fixed speed version), n = 2900 rpm ... 12
Etaline SYT (fixed speed version), n = 1450 rpm ... 12
Etaline SYT (fixed speed version), n = 3500 rpm ... 13
Etaline SYT (fixed speed version), n = 1750 rpm ... 13
Dimensions and connections ... 14
Pump set (fixed speed version), n = 2900 rpm / 3500 rpm ... 14
Pump set (fixed speed version), n = 1450 rpm / 1750 rpm ... 17
Connections ... 20
Flange design ... 21
Installation types ... 21
Scope of supply ... 21
General assembly drawings ... 22
Etaline SYT exploded view ... 22

Centrifugal Pumps with Shaft Seal

Thermal Oil Pumps / Hot Water Pumps

Etaline SYT

Table 2: Operating properties in marine applications, to DNV GL

Characteristic		Value		
		Class I[1]	Class II[2]	Class III[3]
				Steam
Design pressure	p [bar]	> 16	≤ 16	≤ 7
Design temperature	T [°C]	> 300	≤ 300	≤ 170
				Thermal oil
Design pressure	p [bar]	> 16	≤ 16	≤ 7
Design temperature	T [°C]	> 300	≤ 300	≤ 150
				Fuel oil, lubricating oil, combustible hydraulic oil
Design pressure	p [bar]	> 16	≤ 16	≤ 7
Design temperature	T [°C]	> 150	≤ 150	≤ 60
				Other fluids [4]
Design pressure	p [bar]	> 40	≤ 40	≤ 16
Design temperature	T [°C]	> 300	≤ 300	≤ 200

Loading pipes for flammable liquids on offshore supply vessels belong to the same piping class as the fuel. Class II piping suffices outside of category A engine rooms.

Pipes for toxic or corrosive fluids belong to piping class I.

Loading pipes for chemicals or liquefied gases are not specified in the table.

Main applications

- Heat transfer systems
- Hot water circulation

Fluids handled

- Hot water
- Thermal oil, mineral
- Thermal oil, synthetic

Further information on fluids handled

Overview of fluids handled (⇨ Page 9)

Operating data

Table 1: Operating properties in standard applications

Characteristic		Value	
		50 Hz	60 Hz
Flow rate	Q [m³/h]	≤ 316	≤ 228
Head	H [m]	≤ 69	≤ 101
Fluid temperature	T [°C]	≥ -30	≥ -30
Thermal oil		≤ +350	≤ +350
Fluid temperature Hot water		≤ +180	≤ +180
Operating pressure	p [bar]	≤ 16	≤ 16

1172.52/07-EN

1 At least one condition must be met for class I piping (design pressure or design temperature).
2 Both conditions must be met for class II piping (design pressure and design temperature).
3 Both conditions must be met for class III piping (design pressure and design temperature).
4 Cargo oil pipes on oil tankers and open pipe outlets (drains, overflows, ventilation, boiler drain pipes, etc.), irrespective of pressure and temperature, belong to class III.

Design details

Design

- Volute casing pump
- Horizontal installation
- Vertical installation
- Back pull-out design
- Single-stage
- Fixed speed version (without PumpDrive 2 / PumpDrive 2 Eco / PumpDrive R) / variable speed version (with PumpDrive 2 / PumpDrive 2 Eco / PumpDrive R)

Pump casing

- Radially split volute casing
- Replaceable casing wear rings
- In-line design

Drive (fixed speed version)

Standard design:

- KSB/Innomotics surface-cooled IEC three-phase current squirrel-cage motor
- Efficiency class IE2 (size 71/80) / IE3 (from size 90) to IEC 60034-30
- Rated voltage (50 Hz) 230 V / 400 V ≤ 2.20 kW
- Rated voltage (50 Hz) 400 V / 690 V ≥ 3.00 kW
- Rated voltage (60 Hz) - / 460 V ≤ 2.20 kW
- Rated voltage (60 Hz) 460 V / - ≥ 3.00 kW
- Type of construction IM V1
- Enclosure IP55
- Duty type: continuous duty S1
- Thermal class F with temperature sensor, 1 PTC thermistor (size 80/90) / 3 PTC thermistors (from size 100)

Explosion-proof design:

- KSB surface-cooled IEC three-phase current squirrel-cage motor
- Efficiency class IE2 / IE3 to IEC 60034-30
- Rated voltage (50 Hz) 230 V / 400 V ≤ 2.50 kW
- Rated voltage (50 Hz) 400 V / 690 V ≥ 3.30 kW
- Rated voltage (60 Hz) - / 460 V ≤ 2.50 kW
- Rated voltage (60 Hz) 460 V / - ≥ 3.30 kW
- Type of construction IM V1
- Enclosure IP55
- Duty type: continuous duty S1
- II 3G Ex ec IIC T3 Gc
- II 2G Ex eb IIC T3 Gb
- II 2G Ex db (eb) IIB T4 Gb
- II 2G Ex db (eb) IIC T4 Gb

Drive (variable speed version)

KSB SuPremE motor:

- Surface-cooled KSB SuPremE motor, IEC-compatible, magnetless synchronous reluctance motor[5)] (PumpDrive required)
- Efficiency class IE4 / IE5 to IEC TS 60034-30-2:2016
- Mounting points to EN 50347:2001
- Envelope dimensions to DIN VDE 42673-4:2011-07
- Type of construction IM V1
- Enclosure IP55
- Duty type: continuous duty S1
- Thermal class F with temperature sensor, 3 PTC thermistors
- Shaft centreline height 71 to 225 mm
- Rated power 0.55 kW to 45 kW
- Rated speed 1500 rpm or 3000 rpm
- Frequency 50 Hz / 60 Hz (PumpDrive input)
- Voltage 380 V to 480 V (PumpDrive input)

KSB SuPremE C1/D1:

- With terminal box for connecting to PumpDrive 2 or PumpDrive R for mounting on walls and in control cabinets

KSB SuPremE C2/D2:

- Equipped for being fitted with a motor-mounted PumpDrive 2

PumpDrive 2 / PumpDrive 2 Eco:

- Self-cooling frequency inverter of modular design for the continuously variable speed control of asynchronous motors and synchronous reluctance motors by means of analog standard signals, a field bus or the control panel
- Identical design of frequency inverter for the mounting types motor mounting (only for fluid temperature ≤ 110 °C), wall mounting and cabinet mounting
- Mains voltage 3~ 380 V AC -10 % to 480 V AC +10 %
- Mains frequency 50 Hz to 60 Hz ± 2 %

PumpDrive R:

- Self-cooling frequency inverter of modular design for the continuously variable speed control of asynchronous motors and synchronous reluctance motors, such as KSB SupremE motors or permanent magnet synchronous motors, by means of analog standard signals, a field bus or the control panel
- Identical design of frequency inverter for the mounting types wall mounting and cabinet mounting
- Mains voltage 3~ 380 V AC -10 % to 480 V AC +10 %
- Extended mains voltage range (on request)
- Mains frequency 50 Hz to 60 Hz ± 2 %
- Extended power range with a nominal power of 110 kW (standard) or 1400 kW (on request)

Shaft seal

- KSB single mechanical seal
- To EN 12756

Impeller type

- Closed radial impeller with multiply curved vanes

5 Motor sizes 0.55 kW / 0.75 kW with 1500 rpm are designed with permanent magnets.

Bearings

- Product-lubricated carbon plain bearings
- Grease-lubricated radial ball bearings in the motor housing

Static sealing elements

- Between volute casing and discharge cover
- Between discharge cover and bearing housing
- Between bearing housing and seal cover

1172.52/07-EN

Designation

Table 3: Designation example

Position																																			
1	2	3	4	5	6	7	8	9	10	11	12	13	14	15	16	17	18	19	20	21	22	23	24	25	26	27	28	29	30	31	32	33	34	35	36	37
E	T	L	Y	0	3	2	-	0	3	2	-	1	6	0	-	S	G	S	D	B	0	8	A	2	1	1	0	0	2	-	-	B	P	D	2	E
See name plate and data sheet																									See data sheet											

Table 4: Designation key

Position	Code	Description	
1-4	Pump type		
	ETLY	Etaline SYT	
5-16	Size, e.g.		
	032	Nominal suction nozzle diameter [mm]	
	032	Nominal discharge nozzle diameter [mm]	
	160	Nominal impeller diameter [mm]	
17	Pump casing material		
	S	Nodular cast iron	EN-GJS-400-15
18	Impeller material		
	G	Cast iron	EN-GJL-250 / A48CL35
	C	Stainless steel	1.4408 / A743CF8M
19	Design		
	D	DNV	
	S	Standard	
	X	Non-standard (BT3D, BT3)	
	Y	Marine version (e.g. to BV or ABS)	
20	Casing cover		
	D	Casing cover Etaline SYT	
21	Shaft seal type		
	B	Dead-end arrangement	
22-23	Seal code, single mechanical seal		
	08	AQ1V7GG	NU028M0-4EYS
	66	Q7Q7EGG	NU028M0-4EYS
24	Scope of supply		
	A	Pump only (Fig. 0)	
	D	Pump, motor	
	E	Back pull-out unit	
25	Shaft unit		
	2	Shaft unit 25	
26-29	Motor rating P_N [kW]		
	0075	7,50	
	...	...	
	1320	132,00	
30	Number of motor poles		
31-32	Explosion protection		
	ex	With explosion-proof motor	
	--	Without explosion-proof motor	
33	Product generation		
	B	Etaline SYT 2014	
34-37	Design		
	-	Fixed speed version, without PumpDrive	
	PD2	Variable speed version, with PumpDrive 2	
	PD2E	Variable speed version, with PumpDrive 2 Eco	

Materials

Table 5: Overview of available materials

Part No. (⇨ Page 22)	Description	Material
102	Volute casing	Nodular cast iron EN-GJS-400-15 / 536 Gr. 60-40-18
161	Casing cover	Nodular cast iron EN-GJS-400-15 / 536 Gr. 60-40-18
210	Shaft	Chrome steel 1.4021 + QT800
230	Impeller	Grey cast iron EN-GJL-250 / A 48 CL 35B
		Chrome steel 1.4408 / A 743 Gr. CF8M
310	Plain bearing	Carbon
341	Drive lantern	Grey cast iron EN-GJL-250 / A 48 CL 35B
350	Bearing housing	Nodular cast iron EN-GJS-400-15 / 536 Gr. 60-40-18
411.10/.15	Sealing elements	BU9593/ HDR
502.01	Casing wear ring, suction side	Grey cast iron EN-GJL-250 / CI
502.02	Casing wear ring, discharge side	Grey cast iron EN-GJL-250 / CI
902	Studs	8.8/ 5.8
903	Plug	Steel
920	Nut	8 + A2A/ 8 + B633 SC1 TP
920	Impeller nut	8
		A4/ AISI316

Coating and preservation

- Coating and preservation to KSB standard

Product benefits

- Designed to deliver reliable operation with mineral and synthetic thermal oils up to 350 °C
- Maximum operating reliability ensured by KSB mechanical seal with multi-spring arrangement and reliable venting during pump operation
- Safety barriers: Special contour ensures reliable removal of leakage at the mechanical seal; confined sealing elements and effective heat barrier
- Individual requirements are met with maximum efficiency, and operating costs are reduced: impeller trimming, variable speed operation / intelligent control by KSB frequency inverters and KSB motors up to IE5, maximum hydraulic pump efficiency and low NSPHreq
- Wide range of applications through compliance with EN PN16 and ASME, ATEX-compliant version, carbon plain bearings, various marine versions and fan impeller for efficient cooling
- Great ease of maintenance due to casing wear rings and back pull-out design enabling the casing to remain in the piping during maintenance.

Acceptance tests and warranty

The following acceptance tests may be performed at a surcharge:

- **Materials testing**
  - Test report 2.2
- **Final inspection**
  - Inspection certificate 3.1 to EN 10204
- **Hydraulic test**
  - The duty point of each pump is guaranteed according to ISO 9906/2B or ISO 9906/3B.
  - NPSH test
- Other inspections/tests on request

Warranties

- Warranties are given within the scope of the valid delivery conditions.

1172.52/07-EN

Overview of product features / selection tables

Overview of variants

Other designs on request

Table 6: Overview of Etanorm SYT / Etabloc SYT / Etaline SYT variants

Design	102 / Volute casing	230 / Impeller	Mechanical seal	T [°C]	Main applications									
					Chemical industry / pharmaceutical industry	Plastic processing	Timber industry / paper industry / cardboard industry	Soap industry / laundry agent industry	Food industry	Textile industry	Mineral oil industry	Bitumen industry / tar processing industry	Metal processing industry	Aluminium industry
SG08	Nodular cast iron EN-GJS-400-15/ 536 Gr. 60-40-18	Grey cast iron EN-GJL-250/ A 48 Cl. 35B	Mech. seal AQ1V7GG	≥ -30 - ≤ +180[6] / 350[7]	✗	✗	✗	✗	✗	✗	✗	✗	✗	✗
SC08	Nodular cast iron EN-GJS-400-15/ 536 Gr. 60-40-18	Chrome steel 1.4408/ A 743 Gr. CF8M	Mech. seal AQ1V7GG	≥ -30 - ≤ +180[6] / 350[7]	✗	✗	✗	✗	✗	✗	✗	✗	✗	✗

Overview of fluids handled

Table 7: Excerpt from the overview of fluids handled with associated material variants

Fluid handled	Application limits[8]	Materials		Shaft seal	
		Casing / impeller		Single mechanical seal	
		Nodular cast iron/ grey cast iron	Nodular cast iron/ stainless steel	AQ1V7GG	Q7Q7EGG
		SG	SC	Code 08	Code 66
High-temperature hot water[9]	t ≤ +180 °C p ≤ 16 bar	✗		✗	
Water/glycol mixture	t ≤ 180 °C p ≤ 16 bar	✗		-	✗
Thermal oil on mineral oil basis	t ≥ -30 to +350 °C p ≤ 16 bar	✗		✗	
Thermal oil on synthetic basis, vaporisation pressure ≤ 1 bar at operating temperature[10]	t ≥ -30 to +350 °C p ≤ 16 bar	✗		✗	

6 High-temperature hot water
7 Thermal oil
8 The inlet pressure must not fall below atmospheric pressure.
9 Low-salt and fully desalinated water to VdTÜV technical instruction leaflet / AGFW technical instruction leaflet TCN 1466 (VdTÜV) 5/15 (AGFW), edition 02.89
10 For vaporisation pressure > 1 bar use an Etanorm SYT pump.

Overview of functions for variable speed version

Table 8: Overview of functions

Functions / firmware	PumpDrive 2	PumpDrive 2 Eco
Protective functions		
Thermal motor protection	✘	✘
Mains voltage monitoring	✘	✘
Phase failure, motor side	✘	✘
Short-circuit monitoring, motor side (phase to phase and phase to earth)	✘	✘
Dynamic overload protection by speed limitation (i^2t control)	✘	✘
Resonant frequency suppression	✘	✘
Broken wire detection (live zero)	✘	✘
Protection against dry running and hydraulic blockage (sensorless due to learning function)	✘	✘
Dry running protection (external control signal)	✘	✘
Operating point estimation and characteristic curve control	✘	✘
Open-loop control		
Open-loop control mode	✘	✘
Closed-loop control		
Closed-loop control mode via integrated PID controller	✘	✘
Pressure control / differential pressure control (Δp const)	✘	✘
Pressure control / differential pressure control with dynamic pressure compensation (Δp var)	✘	✘
Flow rate control	✘	✘
Sensorless differential pressure control (Δp const) in a single-pump configuration	✘	✘
Sensorless differential pressure control with dynamic pressure compensation (Δp var) in a single-pump configuration	✘	✘
Sensorless flow rate control	✘	✘
Level control	✘	✘
Temperature control	✘	✘
Alternative setpoint	✘	-
Operation and monitoring (display)		
Measured value display (pressure, head, speed, electric power, motor voltage, motor current, torque)	✘	✘
Fault history	✘	✘
Operating hours counter	✘	✘
Fault reporting via relay	✘	✘
Frequency inverter functions		
Programmable start ramps and stop ramps	✘	✘
Field-oriented control (vector control), V/f control	✘	✘
Configurable motor control method (asynchronous motor, KSB SuPremE)	✘	✘
Automatic motor adaptation (AMA)	✘	✘
Motor standstill heater	✘	✘
Manual-0-automatic mode	✘	✘
External OFF	✘	✘
External minimum speed	✘	✘
Sleep mode (stand-by mode)	✘	✘
Energy savings meter	✘	-
Pump functions		
Flow rate estimation	✘	✘
M12 module with PumpMeter bus connection	✘	✘
M12 module for dual-pump configuration	✘	✘
M12 module for multiple pump configuration with up to 6 pumps	✘	✘
Functional check run	✘	✘
Deragging	✘	✘
Integrated dual-pump configuration (1×100 % with redundant pump or 2×50 % without redundant pump)	✘	✘
Multiple pump configuration with up to 6 pumps	✘	✘
Waste water function: start-up at maximum speed	✘	-
Waste water function: rinsing function	✘	-
Operation		

1172.52/07-EN

Functions / firmware	PumpDrive 2	PumpDrive 2 Eco
Control panel	✗	✗[11]
Commissioning wizard	✗	✗[12]
Favourites list	✗	-
Service interface	✗	✗

Pressure and temperature limits

Test pressure limits and temperature limits

Table 9: Test pressure limits and temperature limits depending on the material

Material	Fluid temperature	Test pressure[13]
	[°C]	[bar]
S	-30 to +350	≤ 25

In-service pressure limits and temperature limits

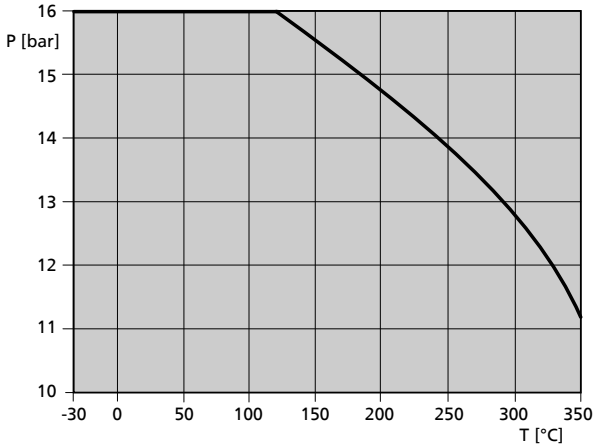

Fig. 1: Operating pressure limits and temperature limits

Technical data

Etaline SYT

Table 10: Technical data

Etaline SYT	Shaft unit	Impeller				Speed limit	
		Outlet	Inlet	Nominal diameter		Max.	Min.
			Diameter	Max.	Min.		
		[mm]				[rpm]	
032-032-160	25	5,7	52,7	170	136	4400	800
032-032-200	25	5,6	54,0	204	170	3800	800
040-040-160	25	8,5	60,6	174	136	3600	800
040-040-200	25	7,0	62,9	209	170	3600	800
050-050-160	25	13,0	70,0	174	128	4400	800
050-050-200	25	9,4	69,4	209	165	3600	800
065-065-160	25	16,9	86,9	174	128	4400	800
065-065-200	25	13,8	83,1	219	170	3600	800
080-080-160	25	21,0	92,0	174	132	3900	800
100-100-160	25	31,6	124,0	174	138	3600	800

11 Some functions can only be parameterised and/or displayed using the KSB ServiceTool (see operating manual).
12 Only available via KSB ServiceTool or app
13 The casing components are checked for leakage by means of internal pressure tests to AN 1897/75-03D00 with water.

Selection charts

Etaline SYT (fixed speed version), n = 2900 rpm

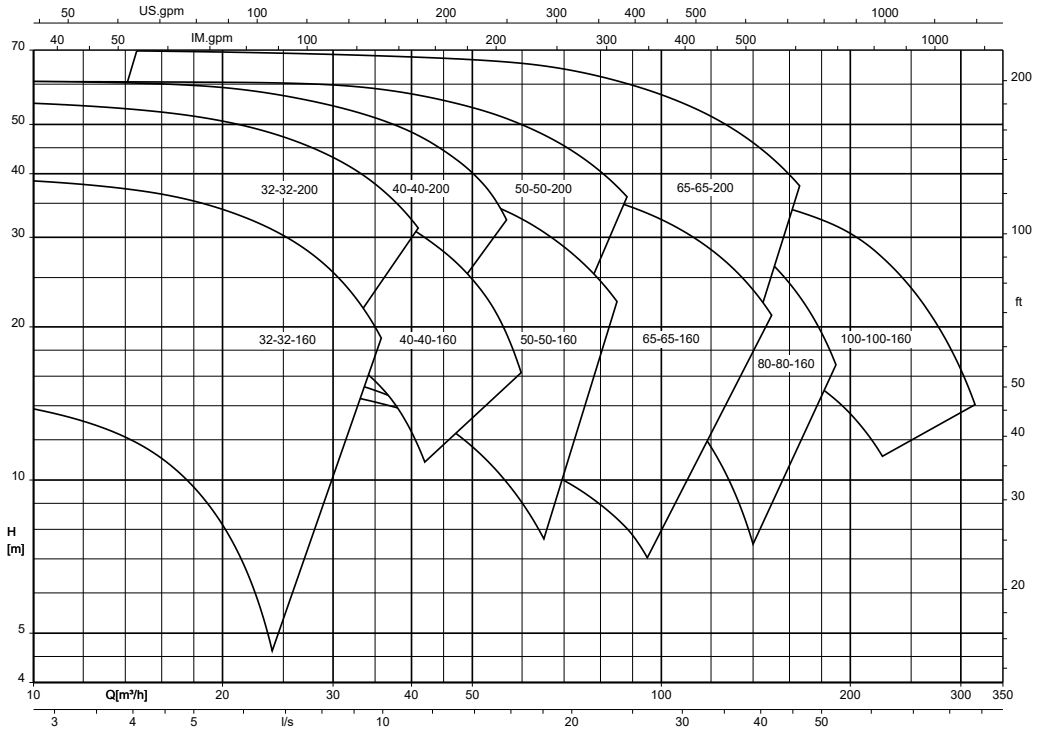

Etaline SYT (fixed speed version), n = 1450 rpm

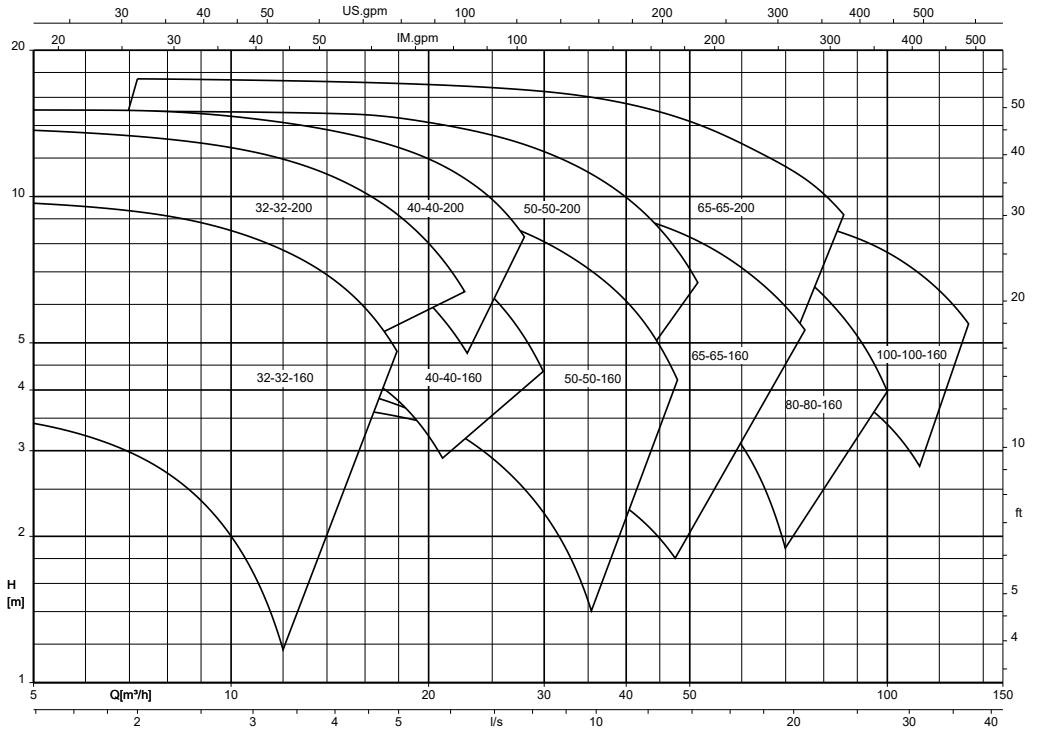

1172.52/07-EN

Etaline SYT (fixed speed version), n = 3500 rpm

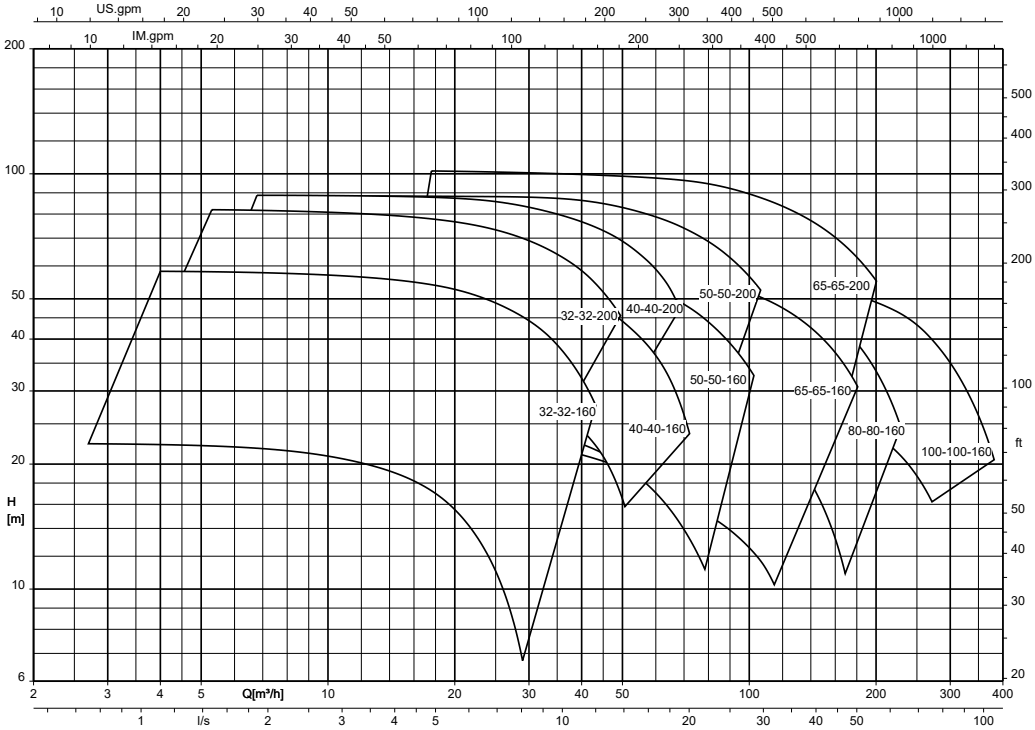

Etaline SYT (fixed speed version), n = 1750 rpm

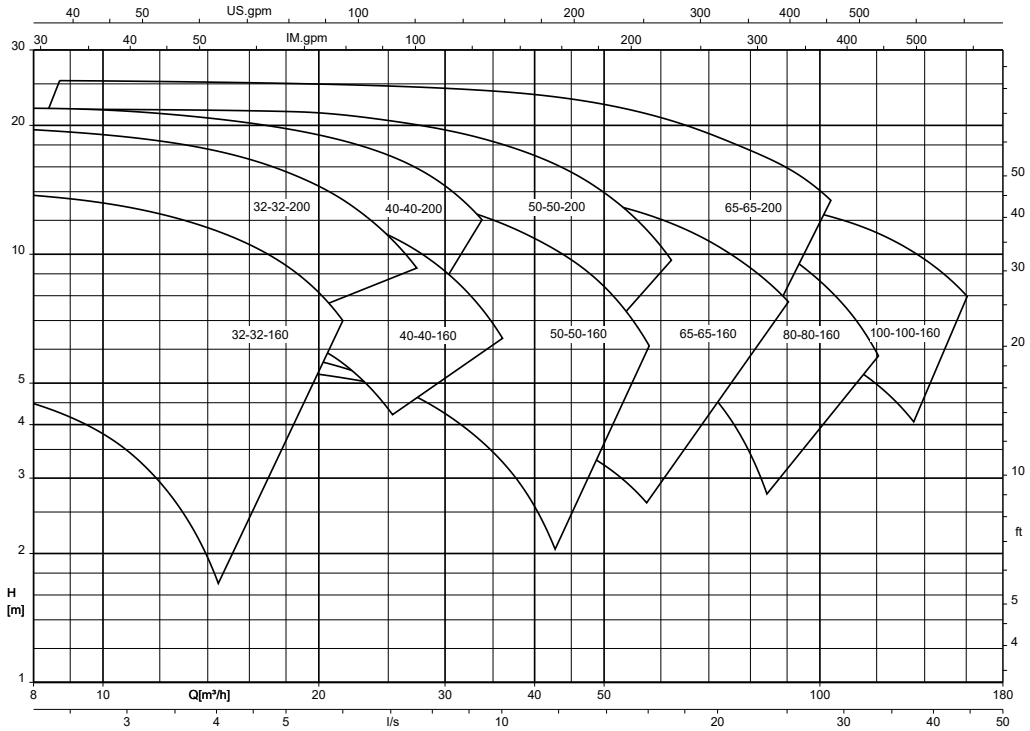

1172.52/07-EN

Dimensions and connections

Pump set (fixed speed version), n = 2900 rpm / 3500 rpm

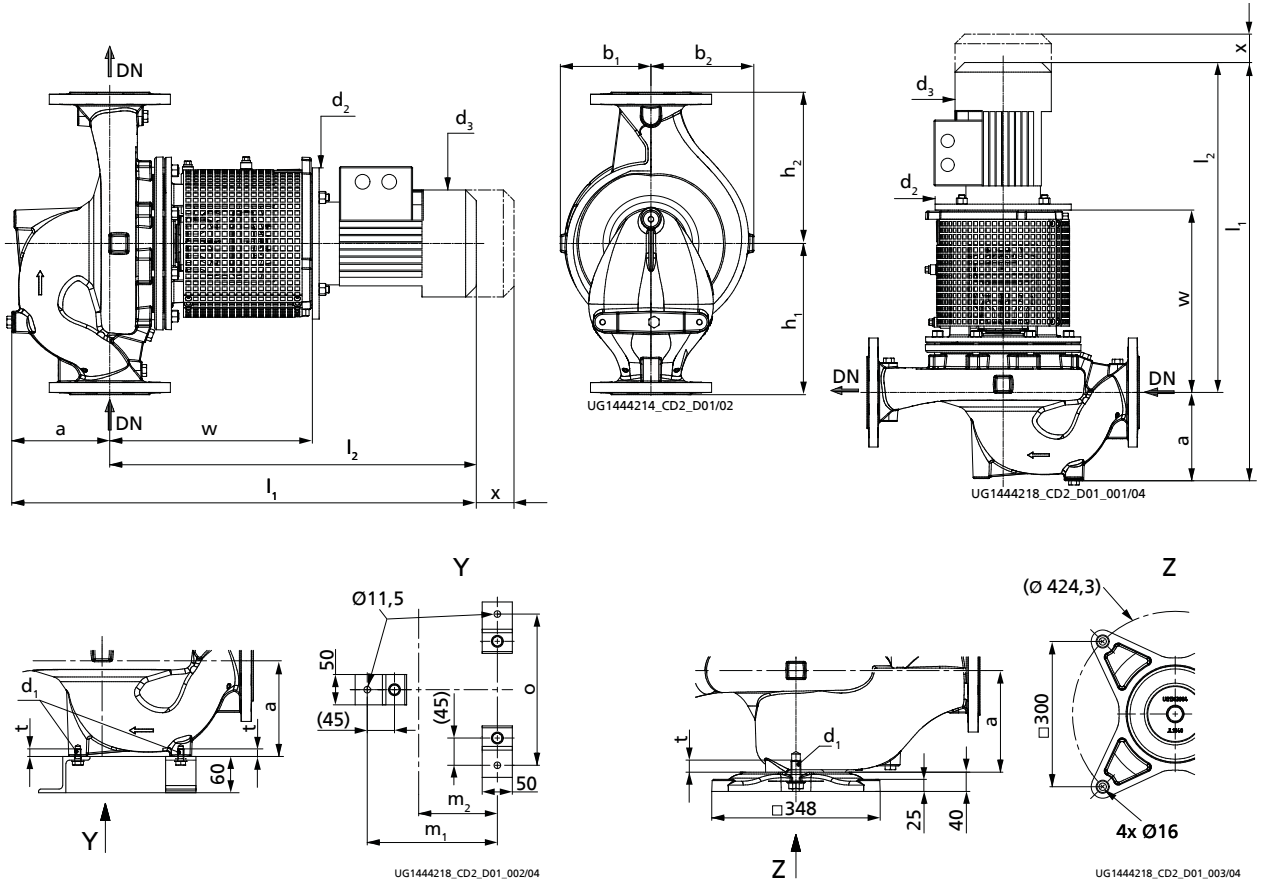

Fig. 2: Dimensions of the pump set, dimensions for fastening a vertically installed pump set to the foundation

Y	3 feet (Etaline SYT up to 080-080-160)
Z	1 foot (Etaline SYT from 100-100-160)

Table 11: Dimensions

Size n = 2900 rpm n = 3500 rpm	Motor	P 50 Hz	P 60 Hz	I_N 400 V 50 Hz	DN	a	b_1	b_2	d_1	d_2	d_3	h_1	h_2	l_1	l_2	m_1	m_2	o	t	w	x
		[kW]	[kW]	[~A]	[mm]																
032-032-160	80M	1,10	-	2,41	32	87	119	131	M10	200	162	180	160	678	591	175	100	190	12,5	322	100
032-032-160	90S	1,50	1,75	3,15	32	87	119	131	M10	200	190	180	160	691	604	175	100	190	12,5	322	100
032-032-160	90L	2,20	2,55	4,46	32	87	119	131	M10	200	190	180	160	717	630	175	100	190	12,5	322	100
032-032-160	100L	3,00	3,45	6,09	32	87	119	131	M10	250	213	180	160	751	664	175	100	190	12,5	317	100
032-032-160	112M	4,00	4,55	7,82	32	87	119	131	M10	250	234	180	160	775	688	175	100	190	12,5	317	100
032-032-160	132S	5,50	6,30	10,49	32	87	119	131	M10	300	266	180	160	840	753	175	100	190	12,5	340	100
032-032-160	132S	-	8,60	14,12	32	87	119	131	M10	300	266	180	160	840	753	175	100	190	12,5	340	100
032-032-200	100L	3,00	-	6,09	32	100	134	146	M10	250	213	250	190	764	664	175	100	190	12,5	317	100
032-032-200	112M	4,00	4,55	7,82	32	100	134	146	M10	250	234	250	190	788	688	175	100	190	12,5	317	100
032-032-200	132S	5,50	6,30	10,49	32	100	134	146	M10	300	266	250	190	853	753	175	100	190	12,5	340	100
032-032-200	132S	7,50	8,60	14,12	32	100	134	146	M10	300	266	250	190	853	753	175	100	190	12,5	340	100
032-032-200	160M	11,00	12,60	20,41	32	100	134	146	M10	350	325	250	190	1020	920	175	100	190	12,5	374	100
032-032-200	160M	-	17,30	27,25	32	100	134	146	M10	350	325	250	190	1020	920	175	100	190	12,5	374	100
040-040-160	90L	2,20	-	4,46	40	114	118	132	M10	200	190	180	160	744	630	165	90	190	12,5	322	100
040-040-160	100L	3,00	3,45	6,09	40	114	118	132	M10	250	213	180	160	778	664	165	90	190	12,5	317	100
040-040-160	112M	4,00	4,55	7,82	40	114	118	132	M10	250	234	180	160	802	688	165	90	190	12,5	317	100
040-040-160	132S	5,50	6,30	10,49	40	114	118	132	M10	300	266	180	160	867	753	165	90	190	12,5	340	100
040-040-160	132S	7,50	8,60	14,12	40	114	118	132	M10	300	266	180	160	867	753	165	90	190	12,5	340	100
040-040-160	160M	-	12,60	20,41	40	114	118	132	M10	350	325	180	160	1034	920	165	90	190	12,5	374	100
040-040-200	100L	3,00	-	6,09	40	110	138	150	M10	250	213	215	210	774	664	175	100	190	12,5	317	100
040-040-200	112M	4,00	-	7,82	40	110	138	150	M10	250	234	215	210	798	688	175	100	190	12,5	317	100
040-040-200	132S	5,50	-	10,49	40	110	138	150	M10	300	266	215	210	863	753	175	100	190	12,5	340	100
040-040-200	132S	7,50	8,60	14,12	40	110	138	150	M10	300	266	215	210	863	753	175	100	190	12,5	340	100
040-040-200	160M	11,00	12,60	20,41	40	110	138	150	M10	350	325	215	210	1030	920	175	100	190	12,5	374	100
040-040-200	160M	15,00	17,30	27,25	40	110	138	150	M10	350	325	215	210	1030	920	175	100	190	12,5	374	100
040-040-200	160L	-	21,30	33,38	40	110	138	150	M10	350	325	215	210	1036	926	175	100	190	12,5	374	100
050-050-160	90L	2,20	-	4,46	50	134	116	135	M10	200	190	250	190	764	630	175	100	190	12,5	322	100
050-050-160	100L	3,00	3,45	6,09	50	134	116	135	M10	250	213	250	190	798	664	175	100	190	12,5	317	100
050-050-160	112M	4,00	4,55	7,82	50	134	116	135	M10	250	234	250	190	822	688	175	100	190	12,5	317	100
050-050-160	132S	5,50	6,30	10,49	50	134	116	135	M10	300	266	250	190	887	753	175	100	190	12,5	340	100
050-050-160	132S	7,50	8,60	14,12	50	134	116	135	M10	300	266	250	190	887	753	175	100	190	12,5	340	100
050-050-160	160M	11,00	12,60	20,41	50	134	116	135	M10	350	325	250	190	1054	920	175	100	190	12,5	374	100
050-050-160	160M	-	17,30	27,25	50	134	116	135	M10	350	325	250	190	1054	920	175	100	190	12,5	374	100
050-050-200	112M	4,00	-	7,82	50	128	139	158	M10	250	234	220	220	816	688	175	100	190	12,5	317	100
050-050-200	132S	5,50	-	10,49	50	128	139	158	M10	300	266	220	220	881	753	175	100	190	12,5	340	100

Size n = 2900 rpm n = 3500 rpm	Motor	P		I_N	DN	a	b_1	b_2	d_1	d_2	d_3	h_1	h_2	l_1	l_2	m_1	m_2	o	t	w	x
		50 Hz	60 Hz	400 V 50 Hz																	
		[kW]	[kW]	[~A]	[mm]																
050-050-200	132S	7,50	8,60	14,12	50	128	139	158	M10	300	266	220	220	881	753	175	100	190	12,5	340	100
050-050-200	160M	11,00	12,60	20,41	50	128	139	158	M10	350	325	220	220	1048	920	175	100	190	12,5	374	100
050-050-200	160M	15,00	17,30	27,25	50	128	139	158	M10	350	325	220	220	1048	920	175	100	190	12,5	374	100
050-050-200	160L	18,50	21,30	33,38	50	128	139	158	M10	350	325	220	220	1054	926	175	100	190	12,5	374	100
050-050-200	180M	-	24,50	39,52	50	128	139	158	M10	350	370	220	220	1112	984	175	100	190	12,5	374	100
065-065-160	100L	3,00	-	6,09	65	150	114	135	M10	250	213	270	170	814	664	175	100	210	12,5	317	100
065-065-160	112M	4,00	-	7,82	65	150	114	135	M10	250	234	270	170	838	688	175	100	210	12,5	317	100
065-065-160	132S	5,50	6,30	10,49	65	150	114	135	M10	300	266	270	170	903	753	175	100	210	12,5	340	100
065-065-160	132S	7,50	8,60	14,12	65	150	114	135	M10	300	266	270	170	903	753	175	100	210	12,5	340	100
065-065-160	160M	11,00	12,60	20,41	65	150	114	135	M10	350	325	270	170	1070	920	175	100	210	12,5	374	100
065-065-160	160M	15,00	17,30	27,25	65	150	114	135	M10	350	325	270	170	1070	920	175	100	210	12,5	374	100
065-065-160	160L	18,50	21,30	33,38	65	150	114	135	M10	350	325	270	170	1076	926	175	100	210	12,5	374	100
065-065-160	180M	-	24,50	39,52	65	150	114	135	M10	350	370	270	170	1134	984	175	100	210	12,5	374	100
065-065-200	132S	7,50	-	14,12	65	131	145	168	M10	300	266	240	235	903	772	195	120	220	12,5	359	100
065-065-200	160M	11,00	12,60	20,41	65	131	145	168	M10	350	325	240	235	1070	939	195	120	220	12,5	393	100
065-065-200	160M	15,00	17,30	27,25	65	131	145	168	M10	350	325	240	235	1070	939	195	120	220	12,5	393	100
065-065-200	160L	18,50	21,30	33,38	65	131	145	168	M10	350	325	240	235	1076	945	195	120	220	12,5	393	100
065-065-200	180M	22,00	24,50	39,52	65	131	145	168	M10	350	370	240	235	1134	1003	195	120	220	12,5	393	100
080-080-160	132S	5,50	-	10,49	80	176	119	147	M10	300	266	260	180	929	753	175	100	230	12,5	340	100
080-080-160	132S	7,50	8,60	14,12	80	176	119	147	M10	300	266	260	180	929	753	175	100	230	12,5	340	100
080-080-160	160M	11,00	12,60	20,41	80	176	119	147	M10	350	325	260	180	1096	920	175	100	230	12,5	374	100
080-080-160	160M	15,00	17,30	27,25	80	176	119	147	M10	350	325	260	180	1096	920	175	100	230	12,5	374	100
080-080-160	160L	18,50	21,30	33,38	80	176	119	147	M10	350	325	260	180	1102	926	175	100	230	12,5	374	100
080-080-160	180M	-	24,50	39,52	80	176	119	147	M10	350	370	260	180	1160	984	175	100	230	12,5	374	100
100-100-160	160M	11,00	-	20,41	100	156	128	163	M20	350	325	245	205	1102	946	-	-	-	25,0	400	140
100-100-160	160M	15,00	17,30	27,25	100	156	128	163	M20	350	325	245	205	1102	946	-	-	-	25,0	400	140
100-100-160	160L	18,50	21,30	33,38	100	156	128	163	M20	350	325	245	205	1108	952	-	-	-	25,0	400	140
100-100-160	180M	22,00	24,50	39,52	100	156	128	163	M20	350	370	245	205	1166	1010	-	-	-	25,0	400	140

Pump set (fixed speed version), n = 1450 rpm / 1750 rpm

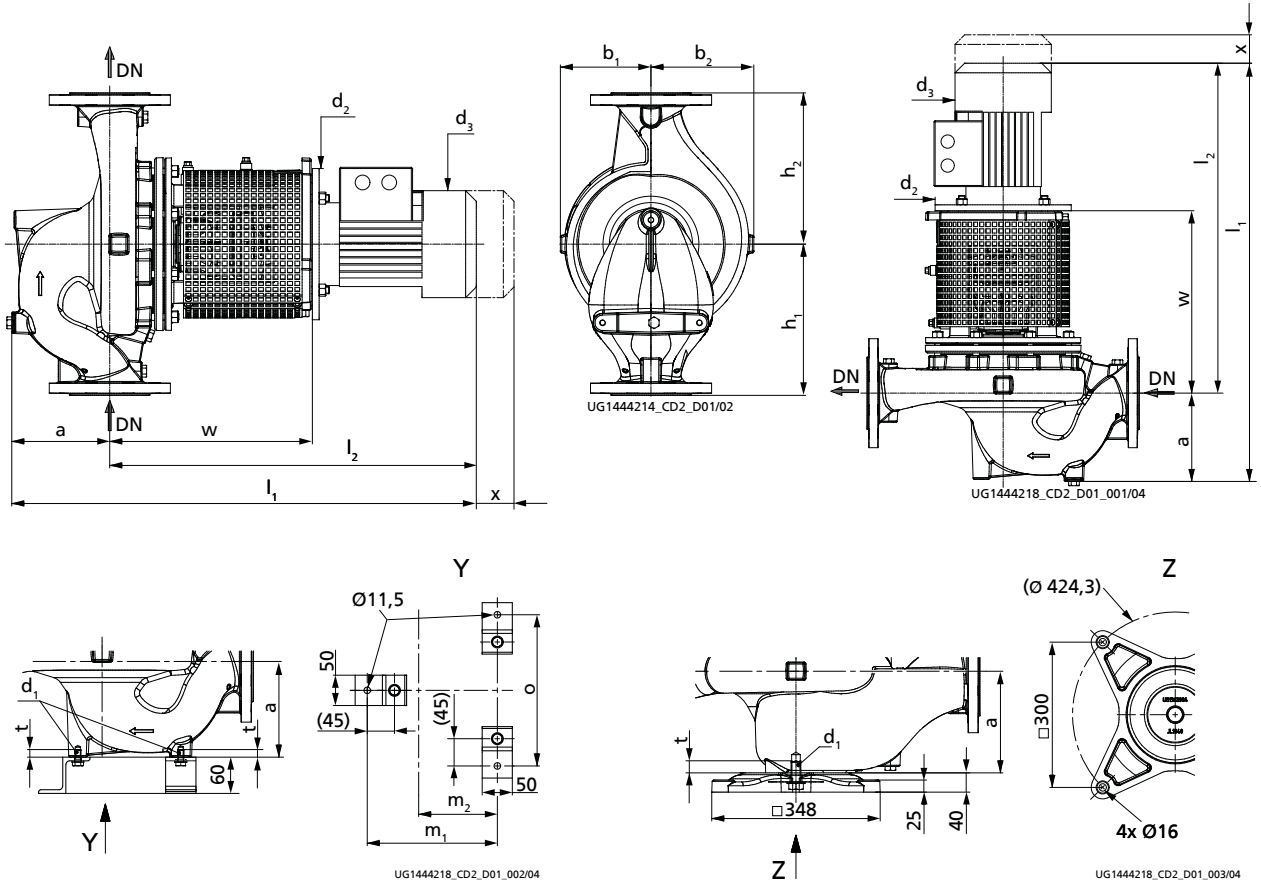

Fig. 3: Dimensions of the pump set, dimensions for fastening a vertically installed pump set to the foundation

Y	3 feet (Etaline SYT up to 080-080-160)
Z	1 foot (Etaline SYT from 100-100-160)

Table 12: Dimensions

Size n = 1450 rpm n = 1750 rpm	Motor	P 50 Hz	P 60 Hz	I_N 400 V 50 Hz	DN	a	b_1	b_2	d_1	d_2	d_3	h_1	h_2	l_1	l_2	m_1	m_2	o	t	w	x
		[kW]	[kW]	[~A]	[mm]																
032-032-160	80M	0,55	0,63	1,46	32	87	119	131	M10	200	162	180	160	664	577	175	100	190	12,5	322	100
032-032-160	80M	0,75	0,86	1,67	32	87	119	131	M10	200	162	180	160	664	577	175	100	190	12,5	322	100
032-032-160	90S	-	1,27	2,51	32	87	119	131	M10	200	190	180	160	691	604	175	100	190	12,5	322	100
032-032-200	80M	0,55	-	1,46	32	100	134	146	M10	200	162	250	190	677	577	175	100	190	12,5	322	100
032-032-200	80M	0,75	0,86	1,67	32	100	134	146	M10	200	162	250	190	677	577	175	100	190	12,5	322	100
032-032-200	90S	1,10	1,27	2,51	32	100	134	146	M10	200	190	250	190	704	604	175	100	190	12,5	322	100
032-032-200	90L	-	1,75	3,32	32	100	134	146	M10	200	190	250	190	730	630	175	100	190	12,5	322	100
032-032-200	100L	-	2,55	4,67	32	100	134	146	M10	250	213	250	190	764	664	175	100	190	12,5	317	100
040-040-160	80M	0,55	0,63	1,46	40	114	118	132	M10	200	162	180	160	691	577	165	90	190	12,5	322	100
040-040-160	80M	0,75	0,86	1,67	40	114	118	132	M10	200	162	180	160	691	577	165	90	190	12,5	322	100
040-040-160	90S	1,10	1,27	2,51	40	114	118	132	M10	200	190	180	160	718	604	165	90	190	12,5	322	100
040-040-160	90L	-	1,75	3,32	40	114	118	132	M10	200	190	180	160	744	630	165	90	190	12,5	322	100
040-040-200	80M	0,55	-	1,46	40	110	138	150	M10	200	162	215	210	687	577	175	100	190	12,5	322	100
040-040-200	80M	0,75	0,86	1,67	40	110	138	150	M10	200	162	215	210	687	577	175	100	190	12,5	322	100
040-040-200	90S	1,10	1,27	2,51	40	110	138	150	M10	200	190	215	210	714	604	175	100	190	12,5	322	100
040-040-200	90L	1,50	1,75	3,32	40	110	138	150	M10	200	190	215	210	740	630	175	100	190	12,5	322	100
040-040-200	100L	2,20	2,55	4,67	40	110	138	150	M10	250	213	215	210	774	664	175	100	190	12,5	317	100
040-040-200	100L	-	3,45	6,18	40	110	138	150	M10	250	213	215	210	809	699	175	100	190	12,5	317	100
050-050-160	80M	0,55	0,63	1,46	50	134	116	135	M10	200	162	250	190	711	577	175	100	190	12,5	322	100
050-050-160	80M	0,75	0,86	1,67	50	134	116	135	M10	200	162	250	190	711	577	175	100	190	12,5	322	100
050-050-160	90S	1,10	1,27	2,51	50	134	116	135	M10	200	190	250	190	738	604	175	100	190	12,5	322	100
050-050-160	90L	1,50	1,75	3,32	50	134	116	135	M10	200	190	250	190	764	630	175	100	190	12,5	322	100
050-050-160	100L	-	2,55	4,67	50	134	116	135	M10	250	213	250	190	798	664	175	100	190	12,5	317	100
050-050-200	80M	0,75	-	1,67	50	128	139	158	M10	200	162	220	220	705	577	175	100	190	12,5	322	100
050-050-200	90S	1,10	1,27	2,51	50	128	139	158	M10	200	190	220	220	732	604	175	100	190	12,5	322	100
050-050-200	90L	1,50	1,75	3,32	50	128	139	158	M10	200	190	220	220	758	630	175	100	190	12,5	322	100
050-050-200	100L	2,20	2,55	4,67	50	128	139	158	M10	250	213	220	220	792	664	175	100	190	12,5	317	100
050-050-200	100L	3,00	3,45	6,18	50	128	139	158	M10	250	213	220	220	827	699	175	100	190	12,5	317	100
050-050-200	112M	-	4,55	8,23	50	128	139	158	M10	250	234	220	220	816	688	175	100	190	12,5	317	100
065-065-160	80M	0,55	0,63	1,46	65	150	114	135	M10	200	162	270	170	727	577	175	100	210	12,5	322	100
065-065-160	80M	0,75	0,86	1,67	65	150	114	135	M10	200	162	270	170	727	577	175	100	210	12,5	322	100
065-065-160	90S	1,10	1,27	2,51	65	150	114	135	M10	200	190	270	170	754	604	175	100	210	12,5	322	100
065-065-160	90L	1,50	1,75	3,32	65	150	114	135	M10	200	190	270	170	780	630	175	100	210	12,5	322	100
065-065-160	100L	2,20	2,55	4,67	65	150	114	135	M10	250	213	270	170	814	664	175	100	210	12,5	317	100
065-065-160	100L	-	3,45	6,18	65	150	114	135	M10	250	213	270	170	849	699	175	100	210	12,5	317	100

Size n = 1450 rpm n = 1750 rpm	Motor	P		I_N	DN	a	b_1	b_2	d_1	d_2	d_3	h_1	h_2	l_1	l_2	m_1	m_2	o	t	w	x
		50 Hz	60 Hz	400 V 50 Hz																	
		[kW]	[kW]	[~A]	[mm]																
065-065-200	90S	1,10	-	2,51	65	131	145	168	M10	200	190	240	235	754	623	195	120	220	12,5	341	100
065-065-200	90L	1,50	1,75	3,32	65	131	145	168	M10	200	190	240	235	780	649	195	120	220	12,5	341	100
065-065-200	100L	2,20	2,55	4,67	65	131	145	168	M10	250	213	240	235	814	683	195	120	220	12,5	336	100
065-065-200	100L	3,00	3,45	6,18	65	131	145	168	M10	250	213	240	235	849	718	195	120	220	12,5	336	100
065-065-200	112M	4,00	4,55	8,23	65	131	145	168	M10	250	234	240	235	838	707	195	120	220	12,5	336	100
065-065-200	132S	5,50	6,30	11,32	65	131	145	168	M10	300	266	240	235	903	772	195	120	220	12,5	359	100
065-065-200	132M	-	8,60	14,70	65	131	145	168	M10	300	298	240	235	931	800	195	120	220	12,5	359	100
080-080-160	80M	0,75	-	1,67	80	176	119	147	M10	200	162	260	180	753	577	175	100	230	12,5	322	100
080-080-160	90S	1,10	1,27	2,51	80	176	119	147	M10	200	190	260	180	780	604	175	100	230	12,5	322	100
080-080-160	90L	1,50	1,75	3,32	80	176	119	147	M10	200	190	260	180	806	630	175	100	230	12,5	322	100
080-080-160	100L	2,20	2,55	4,67	80	176	119	147	M10	250	213	260	180	840	664	175	100	230	12,5	317	100
080-080-160	100L	3,00	3,45	6,18	80	176	119	147	M10	250	213	260	180	875	699	175	100	230	12,5	317	100
080-080-160	112M	-	4,55	8,23	80	176	119	147	M10	250	234	260	180	864	688	175	100	230	12,5	317	100
100-100-160	90L	1,50	-	3,32	100	156	128	163	M20	200	190	245	205	812	656	-	-	-	25	348	140
100-100-160	100L	2,20	2,55	4,67	100	156	128	163	M20	250	213	245	205	846	690	-	-	-	25	343	140
100-100-160	100L	3,00	3,45	6,18	100	156	128	163	M20	250	213	245	205	881	725	-	-	-	25	343	140
100-100-160	112M	4,00	4,55	8,23	100	156	128	163	M20	250	234	245	205	870	714	-	-	-	25	343	140
100-100-160	132S	-	6,30	11,32	100	156	128	163	M20	300	266	245	205	935	779	-	-	-	25	366	140

Connections

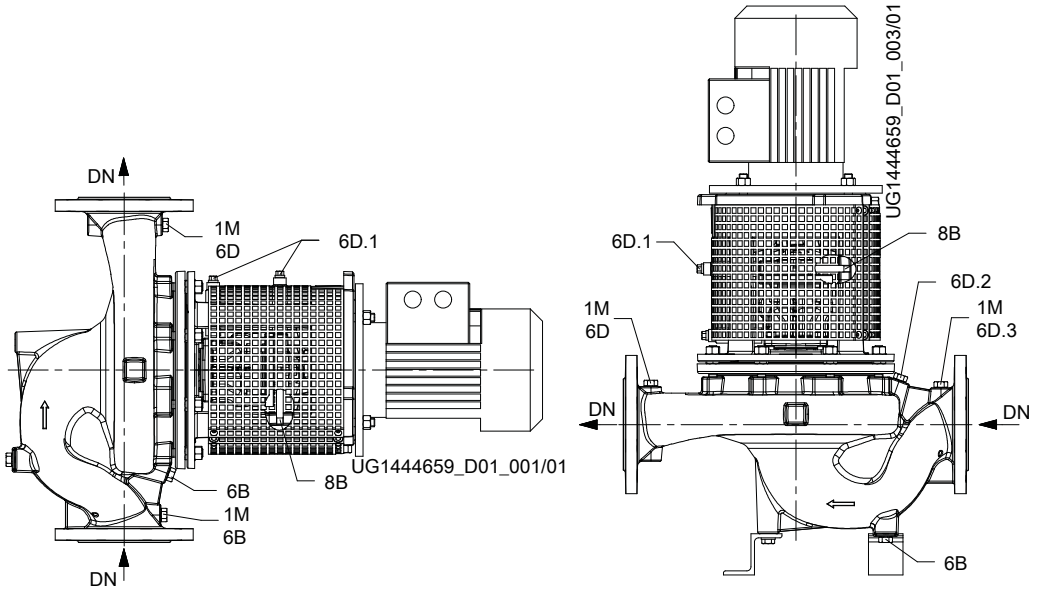

Fig. 4: Etaline SYT connections by installation type

Table 13: Connections

Connection	Description	Configuration	Position
1M	Connection for pressure gauge	Drilled and closed	Suction flange / discharge flange
6B	Fluid drain	Drilled and closed	Volute casing
6D, 6D.1, 6D.2, 6D.3	Fluid priming and venting	Drilled and closed	Volute casing / bearing housing
8B	Leakage drain	Drilled	Seal cover

Table 14: Etaline SYT connections

Etaline SYT	Connection		
	Volute casing	Bearing housing / seal cover	
	1M, 6B, 6D, 6D.2, 6D.3	6D.1	8B
032-032-160	G 1/4	G 1/8	R 1/8
032-032-200	G 1/4	G 1/8	R 1/8
040-040-160	G 1/4	G 1/8	R 1/8
040-040-200	G 1/4	G 1/8	R 1/8
050-050-160	G 1/4	G 1/8	R 1/8
050-050-200	G 1/4	G 1/8	R 1/8
065-065-160	G 1/4	G 1/8	R 1/8
065-065-200	G 1/4	G 1/8	R 1/8
080-080-160	G 3/8	G 1/8	R 1/8
100-100-160	G 3/8	G 1/8	R 1/8

Flange design

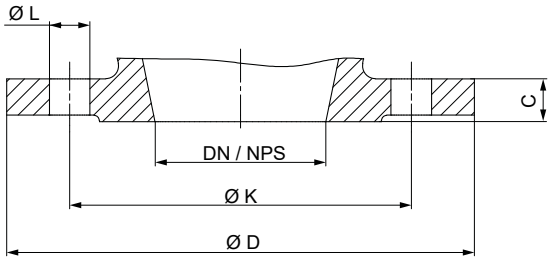

Fig. 5: Flange dimensions of Etaline SYT

Table 15: Flange dimensions of Etaline SYT

DN / NPS	Standard					
	EN 1092-2			ASME B 16.1		
	PN 16			Class 125		
	Ø K	Ø D	Number and Ø of holes (Ø L)	Ø K	Ø D	Number and Ø of holes (Ø L)
	[mm]					
25 / NPS 1	85	115	4 × ∅14	79,2	115	4 × ∅15,7
32 / NPS 1 1/4	100	140	4 × ∅19	88,9	140	4 × ∅15,7
40 / NPS 1 1/2	110	150	4 × ∅19	98,6	150	4 × ∅15,7
50 / NPS 2	125	165	4 × ∅19	120,7	165	4 × ∅19,1
65 / NPS 2 1/2	145	185	4 × ∅19	139,7	185	4 × ∅19,1
80 / NPS 3	160	200	8 × ∅19	152,4	200	4 × ∅19,1
100 / NPS 4	180	230	8 × ∅19	190,5	230	8 × ∅19,1

Table 16: Flange design by material

Material	Standard	Nominal size	Pressure class
S	EN 1092-2	DN 25 - DN 100	PN 16
	Drilled to ASME B16.1[14)]	DN 25 - DN 100	Class 125

Installation types

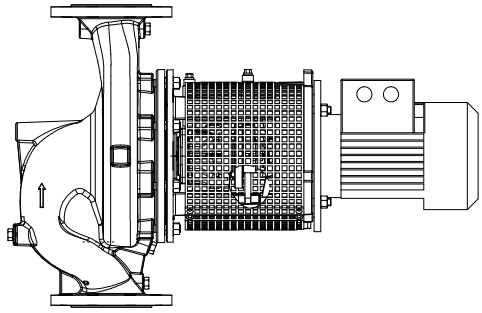

Fig. 6: Horizontal installation, Etaline SYT

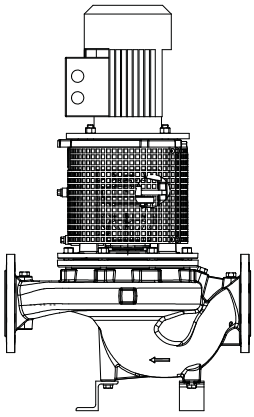

Fig. 7: Vertical installation, Etaline SYT

Scope of supply

Depending on the model, the following items are included in the scope of supply:

- Pump
- Drive
- Pump foot for vertical installation of the drive (optionally selectable)

14 DN 80 machined like DN 100

General assembly drawings

Etaline SYT exploded view

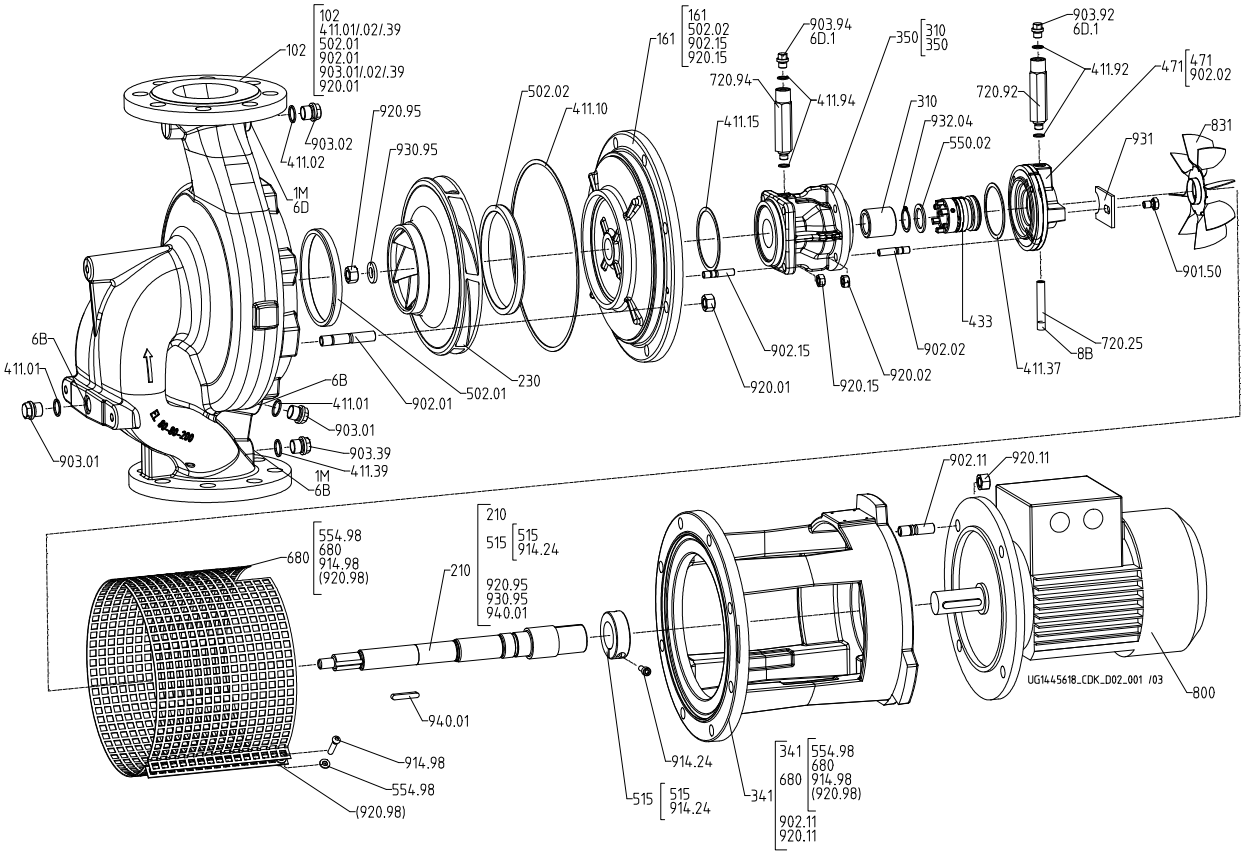

Fig. 8: Etaline SYT exploded view

[Supplied in packaging units only
( ) Not available as individual spare part

Table 17: List of components

Part No.	Description	Part No.	Description
102	Volute casing	720.25/.92/.94	Fitting
161	Casing cover	800	Motor
210	Shaft	831	Fan impeller
230	Impeller	901.50	Hexagon head bolt
310	Plain bearing	902.01/.02/.11/.15	Stud
341	Drive lantern	903.01/.02/.39/.92/.94	Screw plug
350	Bearing housing	914.24	Hexagon socket head cap screw
411.01/.02/.10/.15/.37/.39/.92/.94	Joint ring	914.98	Pan head screw
433	Mechanical seal	920.01/.02/.11/.15/.95	Hexagon nut
471	Seal cover	920.98	Blind rivet nut
502.01/.02	Casing wear ring	930.95	Nord-Lock bolt securing ring
515	Taper lock ring	931	Lock washer
550.02	Disc	932.04	Circlip
554.98	Lock washer	940.01	Key
680	Guard		

1172.52/07-EN

Glossary

Back pull-out design

The complete back pull-out unit can be pulled out without having to remove the pump casing from the piping.

IE2

Efficiency class to IEC 60034-30: 2 = High Efficiency (IE = International Efficiency)

IE3

Efficiency class to IEC 60034-30: 3 = Premium Efficiency (IE = International Efficiency)

IE4

Efficiency class to IEC TS 60034-30-2:2016 = Super Premium Efficiency (IE = International Efficiency)

IE5

Efficiency class for rotating electrical machinery to IEC TS 60034-30-2:2016 = Ultra Premium Efficiency (IE = International Efficiency)

In-line design

A pump whose suction and discharge nozzle are arranged opposite each other and have the same nominal diameter.

Mech. seal

Mechanical seal

2024-03-12

1172.52/07-EN

LENNTECH
WATER TREATMENT SOLUTIONS
info@lenntech.com Tel. +31-152-610-900
www.lenntech.com Fax. +31-152-616-289