Thermal Oil / Hot Water Pump

Etanorm-RSY

Fixed Speed / Variable Speed
50 Hz / 60 Hz

Type Series Booklet

Legal information/Copyright

Type Series Booklet Etanorm-RSY

All rights reserved. The contents provided herein must neither be distributed, copied, reproduced, edited or processed for any other purpose, nor otherwise transmitted, published or made available to a third party without the manufacturer's express written consent.

Subject to technical modification without prior notice.

© KSB SE & Co. KGaA, Frankenthal 2023-05-17

Contents

Centrifugal Pumps with Shaft Seal ... 4
Thermal Oil Pumps / Hot Water Pumps ... 4
Etanorm-RSY ... 5
Main applications ... 5
Fluids handled ... 5
Related documents ... 5
Operating data ... 5
Designation ... 5
Design details ... 5
Materials ... 7
Coating and preservation ... 7
Product benefits ... 7
Product information ... 7
Certifications ... 7
Standards ... 8
Acceptance tests and warranty ... 8
Selection information ... 8
Overview of product features / selection tables ... 9
Pressure limits and temperature limits ... 11
Technical data ... 12
Permissible forces and moments at the pump nozzles ... 12
Noise characteristics ... 12
Selection charts ... 13
Dimensions ... 17
Connections ... 21
Flange design ... 21
Interchangeability of pump components ... 22
Recommended spare parts stock for 2 years' operation to DIN 24296 ... 22
Scope of supply ... 22
General assembly drawing with list of components ... 23

Centrifugal Pumps with Shaft Seal

Thermal Oil Pumps / Hot Water Pumps

1223.5/03-EN

Etanorm-RSY

Main applications

- Heat transfer systems
- Hot water circulation
- Chemical industry
- Petrochemical industry
- Chemical transformation processes
- Cleaning processes
- Thermal separation processes
- Timber/lumber industry
- Plastics industry
- Food industry
- Paper industry and printing industry
- Textile industry

Fluids handled

- Hot water
- Thermal oil

Further information on fluids handled

Overview of fluids handled (⇨ Page 9)

Related documents

Table 1: Information/documents

Document	Reference number
General arrangement drawings booklet	1173.391
Characteristic curves booklet (50 Hz) Fixed speed version	1311.45
Characteristic curves booklet (60 Hz) Fixed speed version	1311.46
Characteristic curves booklet Variable speed version	1311.452
Type series booklet KSB SuPremE	4075.53
Type series booklet PumpDrive 2 / PumpDrive 2 Eco	4074.5
Type series booklet PumpDrive R	4073.5
Type series booklet PumpMeter	4072.5

Operating data

Table 2: Operating properties

Characteristic		Value	
		50 Hz	60 Hz
Flow rate	Q [m³/h]	≤ 1900	≤ 2285
Head	H [m]	≤ 101	≤ 88
Fluid temperature, thermal oil	T [°C]	-30 °C to +350 °C	
Fluid temperature, hot water	T [°C]	≤ 180 °C	
Operating pressure	p [bar]	≤ 16 (⇨ Page 11)	

Designation

Example: EN-RSY 125-500/2

Table 3: Designation key

Code	Description	
Etanorm-RSY	Type series	
	R	Extended selection chart
	S	Casing made of nodular cast iron
	Y	Long-coupled design: for heat transfer fluids and hot water
125	Nominal discharge nozzle diameter [mm]	
500	Nominal impeller diameter [mm]	
/2	Hydraulic system	
	-[1)]	Single-stage
	.1	Single-stage, modified version
	/2	Two stages

Design details

Design

- Horizontal installation
- Volute casing pump
- Radially split volute casing
- Volute casing with integrally cast pump feet
- Baseframe made of welded channel sections

1 Blank

- Back pull-out design
- Axial thrust balanced by discharge-side casing wear ring and balancing holes
- Replaceable casing wear rings
- Single-stage

Size 125-500/2:

- Two stages

≤ DN 200:

- Dimensions and ratings to EN 733

Drive (fixed speed version)

Standard design:

- KSB/Siemens surface-cooled IEC frame three-phase squirrel-cage motor
- Efficiency class IE2 (size 71/80) / IE3 (from size 90) to IEC 60034-30
- Rated voltage (50 Hz) 230 V / 400 V ≤ 2.20 kW
- Rated voltage (50 Hz) 400 V / 690 V ≥ 3.00 kW
- Rated voltage (60 Hz) - / 460 V ≤ 2.20 kW
- Rated voltage (60 Hz) 460 V / - ≥ 3.00 kW
- Type of construction IM B3
- Enclosure IP55
- Duty type: continuous duty S1
- Thermal class F with temperature sensor, 1 PTC thermistor (size 80/90) / 3 PTC thermistors (from size 100)

Explosion-proof design:

- KSB surface-cooled IEC three-phase current squirrel-cage motor
- Efficiency class IE2 / IE3 to IEC 60034-30
- Rated voltage (50 Hz) 230 V / 400 V ≤ 2.50 kW
- Rated voltage (50 Hz) 400 V / 690 V ≥ 3.30 kW
- Rated voltage (60 Hz) - / 460 V ≤ 2.50 kW
- Rated voltage (60 Hz) 460 V / - ≥ 3.30 kW
- Type of construction IM B3
- Enclosure IP55
- Duty type: continuous duty S1
- II 3G Ex ec IIC T3 Gc
- II 2G Ex eb IIC T3 Gb
- II 2G Ex db (eb) IIB T4 Gb
- II 2G Ex db (eb) IIC T4 Gb

Drive (variable speed version)

KSB SuPremE motor:

- Surface-cooled KSB SuPremE motor, IEC-compatible, magnetless synchronous reluctance motor[2)] (PumpDrive required)
- Efficiency class IE4 / IE5 to IEC TS 60034-30-2:2016
- Mounting points to EN 50347:2001
- Envelope dimensions to DIN VDE 42673-4:2011-07
- Type of construction IM B3
- Enclosure IP55
- Duty type: continuous duty S1
- Thermal class F with temperature sensor, 3 PTC thermistors
- Shaft centreline height 71 to 225 mm
- Rated power 0.55 kW to 45 kW
- Rated speed 1500 rpm or 3000 rpm
- Frequency 50 Hz / 60 Hz (PumpDrive input)
- Voltage 380 V to 480 V (PumpDrive input)

KSB SuPremE C1/D1:

- With terminal box for connecting to PumpDrive 2 or PumpDrive R for mounting on walls and in control cabinets

KSB SuPremE C2/D2:

- Equipped for being fitted with a motor-mounted PumpDrive 2

PumpDrive 2:

- Self-cooling frequency inverter of modular design for the continuously variable speed control of asynchronous motors and synchronous reluctance motors by means of analog standard signals, a field bus or the control panel
- Identical design of frequency inverter for the mounting types motor mounting (only for fluid temperature ≤ 110 °C), wall mounting and cabinet mounting
- Mains voltage 3~ 380 V AC -10 % to 480 V AC +10 %
- Mains frequency 50 Hz to 60 Hz ± 2 %

Shaft seal

- Cartridge seal
- Standardised mechanical seal to EN 12756

Impeller type

- Closed radial impeller with multiply curved vanes

Bearings

Drive end:

- Grease-packed rolling element bearings sealed for life

Pump-end:

Direction of rotation

- Clockwise, viewed from the drive end.

1223.5/03-EN

2 Motor sizes 0.55 kW / 0.75 kW with 1500 rpm are designed with permanent magnets.

Materials

Table 4: Overview of available materials

Part No. (⇨ Page 23)	Description	Material variant	
		SC1	SG
102	Volute casing	Nodular cast iron, EN-GJS-400-18-LT	
161	Casing cover	Nodular cast iron, EN-GJS-400-18-LT	
210	Shaft	Chrome steel, 1.4057+QT800	
230	Impeller	Stainless steel, 1.4408 / A743 Gr. CF8 M	Grey cast iron, EN-GJL-250
330	Bearing bracket	Nodular cast iron, EN-GJS-400-18-LT	
502.01	Casing wear ring, suction side	Grey cast iron / cast iron	
502.02	Casing wear ring, discharge side	Grey cast iron / cast iron	
529	Bearing sleeve	Chrome steel, 1.4122-HV500+80[3)]	
545	Bearing bush	Carbon KHK[3)]	

Coating and preservation

- Coating and preservation to KSB standard
- Heat-resistant enamel (RAL 9007, grey aluminium)

Product benefits

- Operating costs reduced by trimming the nominal impeller diameter to match the specified duty point
- Easy to dismantle due to back pull-out design; no need to remove the pump casing from the piping
- High resistance by anti-seize product-lubricated carbon plain bearing or SIC/SIC bearing
- Operating reliability through materials selected for various intake conditions and high pressures of up to 16 bar
- Service-friendly with easy-to-replace casing wear rings

Product information

Product information as per Regulation No. 1907/2006 (REACH)

For information as per European chemicals regulation (EC) No. 1907/2006 (REACH) see https://www.ksb.com/en-global/company/corporate-responsibility/reach.

Product Information as per Regulation No. 547/2012 (for water pumps with a maximum shaft power of 150 kW) implementing "Ecodesign" Directive 2009/125/EC

- This product is designed for use above 120 °C only.
- Further technical data see data sheet.

Certifications

Table 5: Overview

Label	Effective in:	Comment
	All countries	Certified quality management to ISO 9001

3 Optional: ceramics SSiC

Standards

Table 6: Applicable standards

Standard	Title
DIN EN 733[4)]	End-suction centrifugal pumps, rating 10 bar, with bearing bracket - Nominal duty point, main dimensions, designation system
DIN EN 809	Pumps and pump sets for liquids – Common safety requirements
DIN EN 12756	Mechanical seals – Main dimensions, designation and material codes
DIN EN ISO 12100	Safety of machinery - General principles for design - Risk assessment and risk reduction

Acceptance tests and warranty

Hydraulic test:

- To ISO 9906 Cl. 2A
- Non-witnessed
- Scope of testing: Q, H, P, η, H_0

Hydraulic test:

- To ISO 9906 Cl. 2A
- Non-witnessed
- Scope of testing: Q, H, P, η, H_0, NPSH at duty point

Hydraulic test:

- To ISO 9906 Cl. 2A
- Witnessed
- Scope of testing: Q, H, P, η, H_0

Hydraulic test:

- To ISO 9906 Cl. 2A
- Witnessed
- Scope of testing: Q, H, P, η, H_0, NPSH at duty point

Final inspection:

- Inspection certificate 3.1. B to EN 10204 for hydrostatic test of complete pump

Materials inspection and testing:

- Test report 2.1 to EN 10204

Materials inspection and testing:

- Test report 2.2 to EN 10204

Warranty:

- Warranties are given within the scope of the valid terms and conditions of sale and delivery.

Selection information

Duty point

Pump operation is possible at any point on the individual performance curve, provided $NPSH_A > NPSH_P$. The max. permissible pump performance or the max. permissible pump discharge pressure must not be exceeded. Short-term operation near the shut-off head is permitted.

Flow rate

If the plant configuration is such that the pump might be operated against a closed discharge-side shut-off valve, a minimum flow of roughly 25 % of Q_{opt} is required during this time (max. 2 minutes).

$Q_{min} = 0.25 \times Q_{opt}$

The following requirement must be met for continuous operation at low flow:
$Q_{Low\text{-}flow} = 0.45 \times Q_{opt}$

Head

The head developed by the individual sizes depends on the following characteristics:

- Impeller speed
- Impeller trimming
- Permissible pump discharge pressure when handling higher-density fluids

NPSH

The NPSH values given in the individual performance curves are minimum values which correspond to the cavitation limit. They apply to degassed water. For safety reasons, the curve values shall therefore be increased by at least 0.5 m for the application.

General rule:
$NPSH_{available} - NPSH_{pump} \geq 0.5$ m

Size of suction pipe

The nominal diameter of the suction nozzle is immaterial for the selection of the nominal diameter of the suction strainer with foot valve and of the suction pipe. The suction pipe diameter shall be selected so that flow velocity does not exceed 1.5 m/s. If the nominal diameter of the suction flange is smaller than that of the suction pipe, an eccentric adapter must be fitted, to prevent the formation of air pockets.

Permissible circumferential speed of the impeller

Table 7: Permissible circumferential speed of the impeller [m/s] depending on material variant

Material variant	Permissible circumferential speed of the impeller
	[m/s]
SC1	60
SG	50

1223.5/03-EN

4 Not for pump type ETNE

Overview of product features / selection tables

Overview of fluids handled

Table 8: Symbols key

Symbol	Description
✗	Standard
-	Version not available / not feasible

Table 9: Excerpt from the overview of fluids handled with associated material variants

Fluid handled	Application limits[5]	Materials Casing / impeller		Shaft seal	
		Nodular cast iron/ grey cast iron	Nodular cast iron/ stainless steel	Single mechanical seal AQ_1VGG	Single mechanical seal Q_1AVGG
		SG	SC		
High-temperature hot water[6]	t ≤ 180 °C	✗		✗	✗
	p ≤ 16 bar				
Thermal oil on mineral oil basis	t = -30 to 350 °C	✗		✗	✗
	p ≤ 16 bar				
Thermal oil on synthetic basis, vapour pressure ≤ 1 bar at operating temperature	t = -30 to 350 °C	✗		✗	✗
	p ≤ 16 bar				
Thermal oil on synthetic basis, vapour pressure ≥ 1 bar at operating temperature	t = -30 to 350 °C	✗		-	✗
	p ≤ 16 bar				

Overview of material variants

Table 10: Material variants available

Size	Material variant	
	SC1	SG
125-500/2	✗	✗
150-500.1	✗	✗
200-330	✗	✗
200-400	✗	✗
200-500	✗	✗
250-330	✗	✗
250-400	✗	✗
250-500	✗	✗
300-360	✗	✗
300-400	✗	✗
300-500	✗	✗

Drive

Table 11: Selection table: drive[7]

Feature	KSB	SIEMENS
Motor enclosure	IP55	IP55
Thermal class	F to IEC 34-1	F to IEC 34-1
Rated voltage	400 V / 690 V	400 V / 690 V
Motor material	Grey cast iron	Grey cast iron
Efficiency class	IE3 to IEC 60034-30	IE3 to IEC 60034-30
Terminal box position	360°	360° / 45°

5 The inlet pressure must not fall below atmospheric pressure.

6 Low-salt or fully desalinated water to VdTÜV technical instruction leaflet / AGFW technical instruction leaflet TCN 1466 (VdTÜV) 5/15 (AGFW), edition 02.89

7 The cooling air of the electric motor used to drive the pump must flow in axial direction towards the pump end. Air velocity ≥ 3 m/s, measured in the area of the drive-side bearing end plate.

Feature	KSB	SIEMENS
Frequency of starts ≤ 12 kW	15 starts/h	15 starts/h
Frequency of starts ≤ 100 kW	12 starts/h	12 starts/h
Frequency of starts > 100 kW	5 starts/h	5 starts/h

Shaft seal

Table 12: Selection table: mechanical seal

Feature	KSB 4HL	Burgmann M7 N-5
Design	Single cartridge mechanical seal	Single mechanical seal
Direction of rotation	Bi-directional and balanced	Bi-directional and balanced
Application	Mineral and synthetic heat transfer fluids as well as hot water	Mineral and synthetic heat transfer fluids as well as hot water
Fluid temperature	-30 °C to +350 °C	-30 °C to +350 °C
Operating pressure	40 bar, dynamic	16 bar
Bearing bracket (seal size)	70 (070)	70 (070)
Seal code	AQ1VGG	Q1AVGG
Mode of operation	Dead-end with air cooling	Dead-end with air cooling

Bearings

Table 13: Selection table: bearings

Feature	Standard		Optional	
	Pump end	Drive end	Pump end	Drive end
Design	Plain bearing	Rolling element bearings 6413 C3 with Nilos ring JV 6[8)]	Plain bearing	Rolling element bearings 6413 C3 with Nilos ring JV 6[8)]
Material	Carbon (KHK)	-	SiC / SiC	-
Lubrication type	Product-lubricated	Grease-lubricated	Product-lubricated	Grease-lubricated
Bearing temperature (measured on the outside of the bearing bracket)	-	≤ 90 °C	-	≤ 90 °C
Bearing bracket	SU 65		SU 65	

Table 14: Key to designation of bearing bracket

Code	Description
WE	Bearing bracket: version for heat transfer fluids
65	Size code (based on dimensions of seal chamber and shaft end)

Coupling / coupling guard

Table 15: Selection table: coupling

Feature	N coupling	NH coupling	Rotex ZS-DKM-H
Design	Flexible coupling		
Spacer sleeve	-	✗	✗

Table 16: Selection table: coupling guard

Feature	Standard	Optional
Design	Coupling guard	Coupling guard
Description	Lightweight	
	Not designed to support a person's weight	
	Without support piece	
	Guard/ring made of galvanised solid unperforated sheet metal	Non-sparking, made of brass
	-	Not designed to support a person's weight
	-	Mounted on bearing bracket

8 To DIN 625

Pressure limits and temperature limits

Test pressure limits and temperature limits

Table 17: Pressure limits and temperature limits

Fluid handled	Fluid temperature	Test pressure[9]
	[°C]	[bar]
Thermal oil	-30 to +350	≤ 24
Hot water	≤ 180	≤ 24

In-service pressure limits and temperature limits

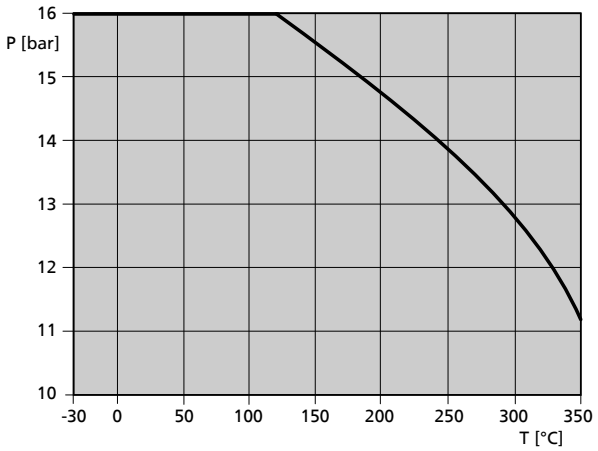

Fig. 1: Operating pressure limits and temperature limits[10]

Inlet pressure

The maximum inlet pressure is limited by the permissible pump discharge pressure p2.

Table 18: Inlet pressure

Fluid handled	Inlet pressure
	[bar]
Thermal oil	≤ 10
Hot water	≤ 12

Test pressure

1.5 x nominal pressure

1223.5/03-EN

9 The casing components are checked for leakage by means of internal pressure tests to AN 1897/75-03D00 with water.
10 The sum of inlet pressure and shut-off head must not exceed the values indicated in the diagram.

Technical data

Etanorm-RSY

Table 19: Technical data

Size	Impeller					n		J	Volumetric pump content (approx.)	P/n value				Weight	
	Diameter		Free passage	Impeller outlet	Number of vanes	Min.	Max.			EN-GJL-250		1.4408 / A743 Gr. CF8 M		Material variant	
	Min.	Max.								20 °C	350 °C	20 °C	350 °C	SG	SC1
[mm]	[mm]	[mm]	[mm]		[rpm]	[rpm]	[kg m²]	[l]						[kg]	[kg]
125-500/2	260	405	14	16	7	800	1500	0,68	41,8	0,088	0,0632	0,0835	0,0384	263,5	255,1
150-500.1	410	500	19	21	7	800	1500	0,85	62,7	0,2836	0,2036	0,2691	0,1236	347,6	322,5
200-330	270	330	48	54	5	800	1800	0,25	47,7	0,2836	0,2036	0,2691	0,1236	388,1	372,7
200-400	340	405	32	38	7	800	1800	0,52	49,5	0,2836	0,2036	0,2691	0,1236	381	361
200-500	420	510	33	36	7	800	1500	1,10	52,6	0,2836	0,2036	0,2691	0,1236	529,1	495,6
250-330	290	330	37	72	6	800	1800	0,42	70,3	0,2836	0,2036	0,2691	0,1236	463,3	439
250-400	340	405	36	58	6	800	1800	0,75	78,8	0,2836	0,2036	0,2691	0,1236	444,6	422,5
250-500	440	520	40	44	7	800	1500	1,35	84,3	0,2836	0,2036	0,2691	0,1236	606,3	568,9
300-360	320	360	44	78	6	800	1800	0,55	125,1	0,2836	0,2036	0,2691	0,1236	581	555,3
300-400	360	430	33	65	8	800	1800	0,94	120,7	0,2836	0,2036	0,2691	0,1236	689,9	656,8
300-500	450	520	40	56	7	800	1500	1,67	120,1	0,2836	0,2036	0,2691	0,1236	677,8	636,8

Permissible forces and moments at the pump nozzles

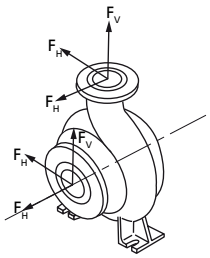

$$\left[\frac{\Sigma\,|F_V|}{|F_{Vmax}|}\right]^2 + \left[\frac{\Sigma\,|F_H|}{|F_{Hmax}|}\right]^2 + \left[\frac{\Sigma\,|M_t|}{|M_{tmax}|}\right]^2 \leq 1$$

Fig. 2: Forces and moments at the pump nozzles

The following condition must be met:

$\sum|F_V|$, $\sum|F_H|$, and $\sum|M_t|$ are the sums of the absolute values of the respective loads acting on the nozzles. Neither the load direction nor the load distribution among the nozzles are taken into account in these sums.

Table 20: Forces and moments at the pump nozzles depending on the fluid temperature[11)]

Size	t = 20 °C			t = 300 °C		
	F_{Vmax}	F_{Hmax}	M_{tmax}	F_{Vmax}	F_{Hmax}	M_{tmax}
	[kN]	[kN]	[kNm]	[kN]	[kN]	[kNm]
125	3,8	5,3	1,45	3,28	4,58	1,25
150	4,2	5,9	2,2	3,63	5,1	1,9
200	6,0	8,4	3,6	5,18	7,25	3,1
250	7,5	10,5	5,7	6,48	9,1	4,9
300	7,5	10,5	9,3	6,48	9,1	8,0
350	7,5	10,5	12,9	6,68	9,1	11,1

Noise characteristics

Table 21: Surface sound pressure level L_{pA}[12) 13)]

P_N	Pump	Pump set
	1450 rpm	1450 rpm
[kW]	[dB]	[dB]
15	64	69
19	65	69
22	66	70
30	67	71
37	69	72
45	70	73
55	71	74
75	72	75
90	73	76
110	74	76
132	76	79
160	76	79
200	77	80
250	78	81
315	79	82
400	79	82

1223.5/03-EN

11 The indicated values apply to nodular cast iron EN-GJS-400-18-LT.

12 Surface sound pressure level as per ISO 3744 and DIN EN ISO 20361 ; valid for a pump operating range of Q/QBEP = 0.8 - 1.1 and non-cavitating operation.

13 For measuring and constructional tolerance, add 1 dB for n ≤ 1750 rpm and 3 dB for n > 1750 rpm.

Selection charts

Etanorm-RSY, n = 1450 rpm

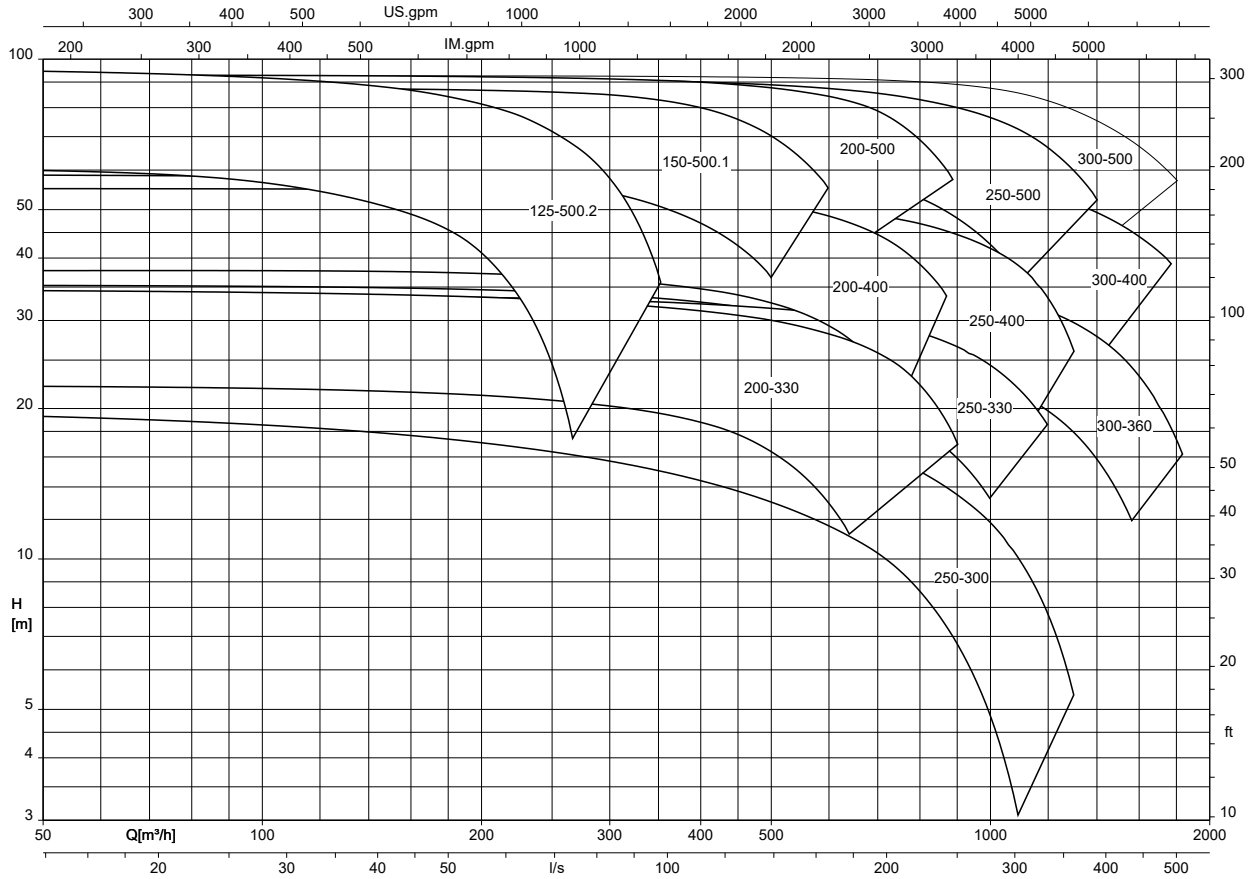

Etanorm-RSY, n = 960 rpm

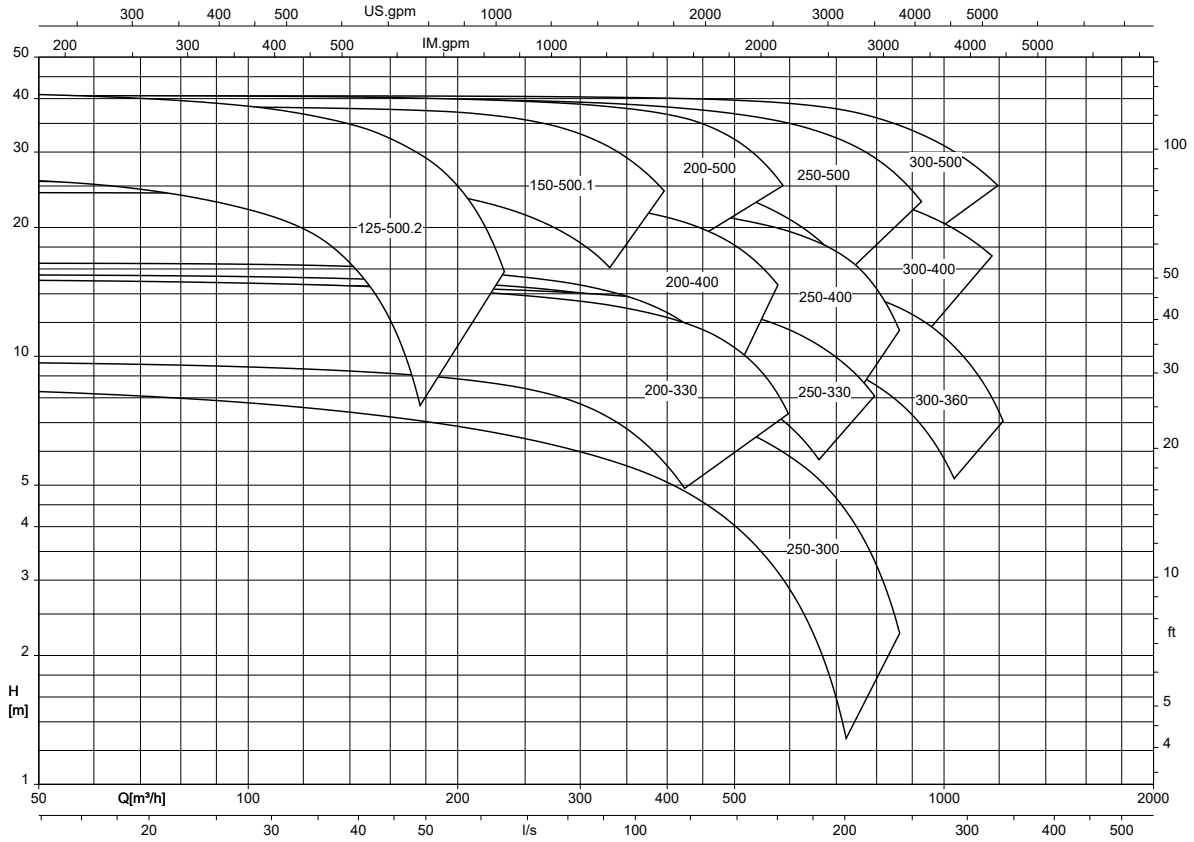

1223.5/03-EN

Etanorm-RSY, n = 1750 rpm

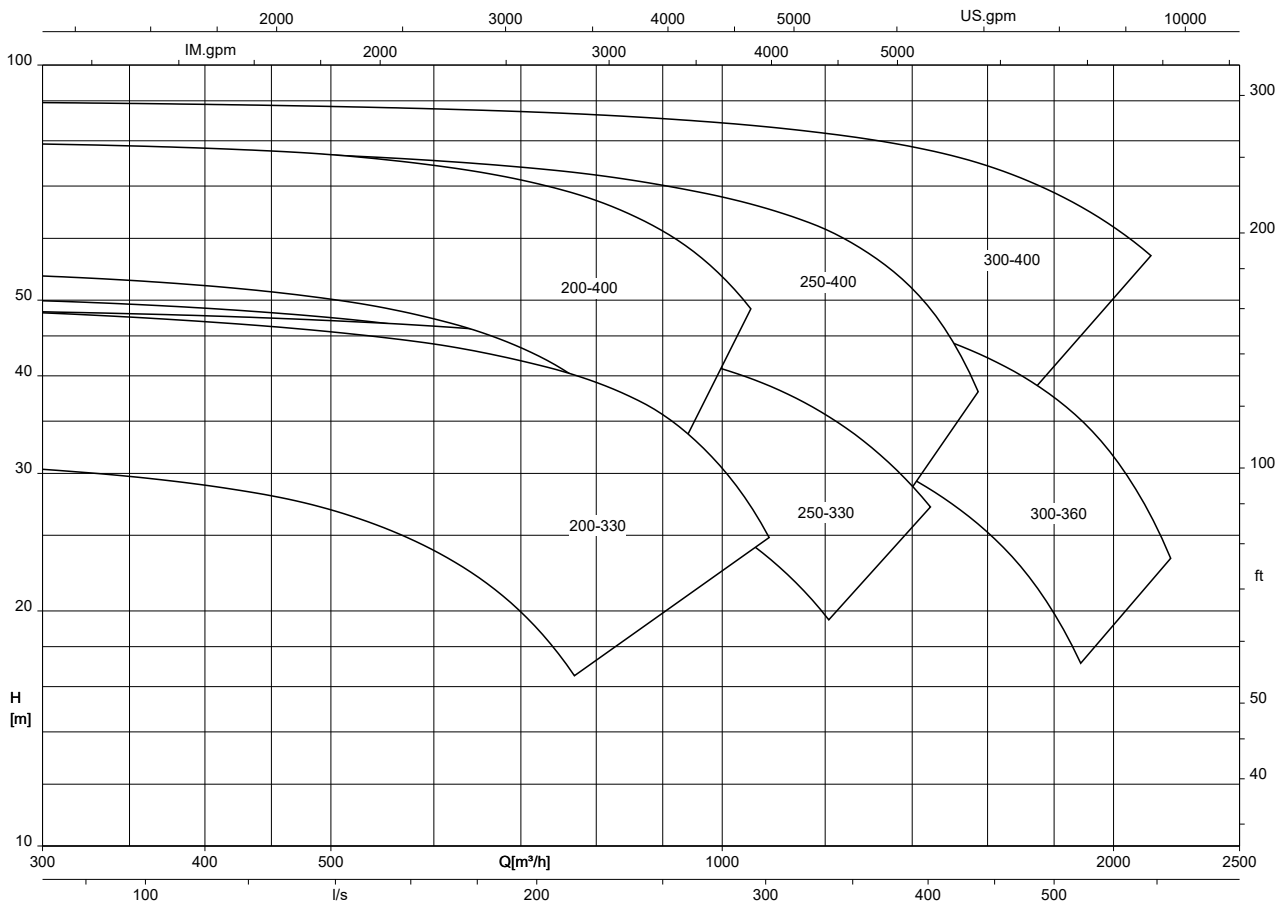

1223.5/03-EN

Etanorm-RSY, n = 1160 rpm

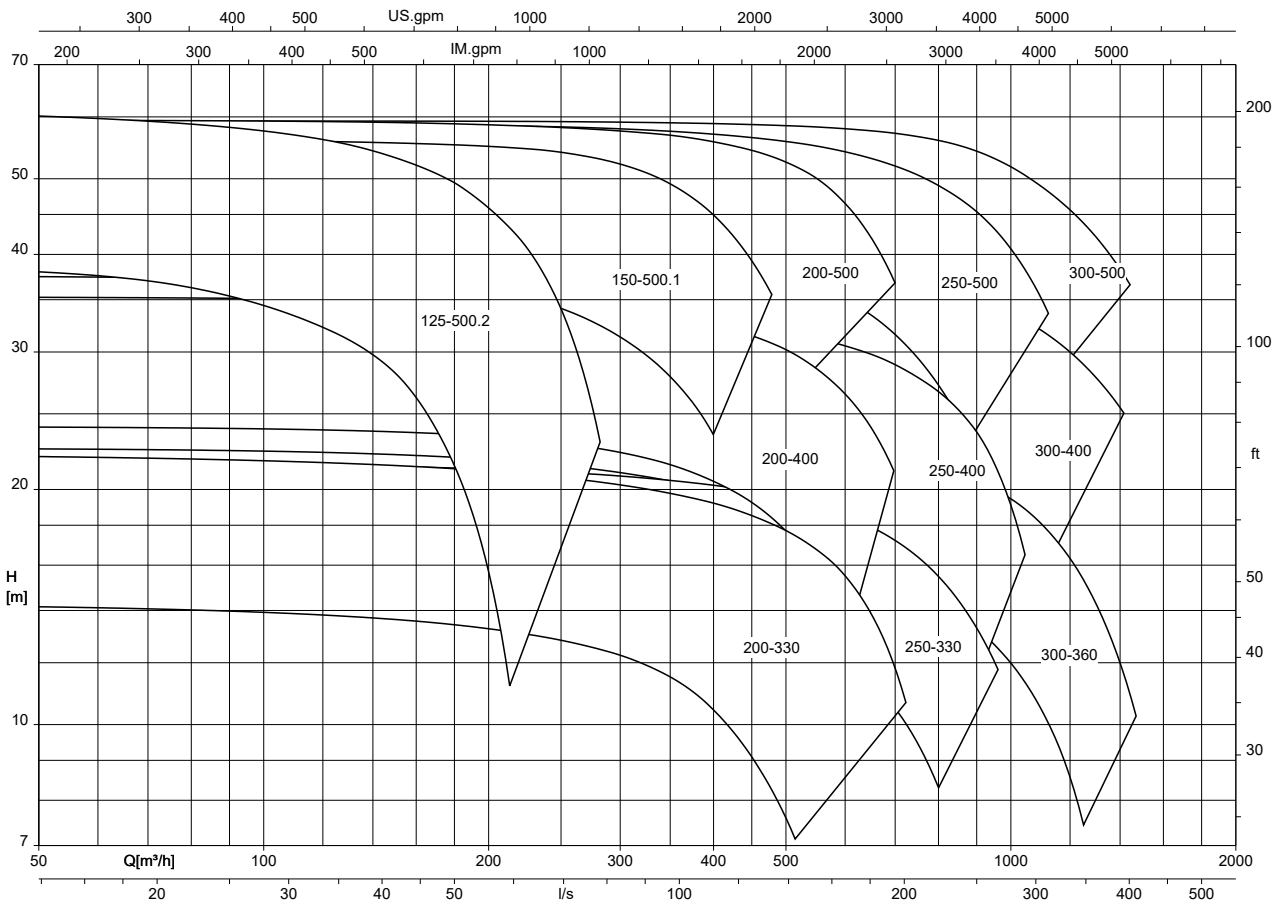

1223.5/03-EN

Dimensions

Pump set with foundation

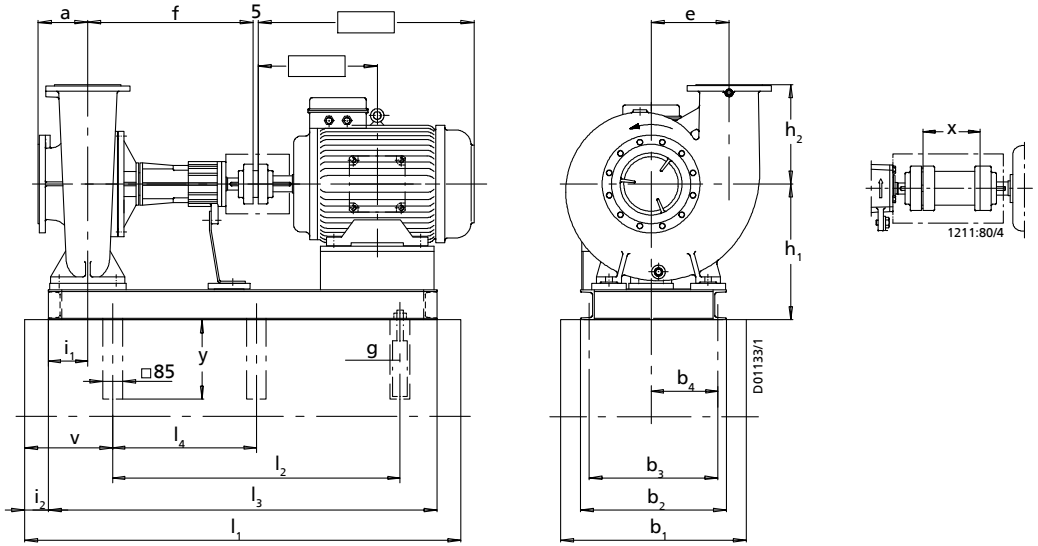

Fig. 3: Dimensions of the pump set with foundation

Table 22: Dimensions

Size	Motor	P_2		DN_1	DN_2	a	e	f	g	h_2	i_1	y	Coupling										Spacer-type coupling											
		960, 1160 rpm	1450, 1750 rpm										b_1	b_2	b_3	b_4	h_1	i_2	l_1	l_2	l_3	v	b_1	b_2	b_3	b_4	h_1	i_2	l_1	l_2	l_3	l_4	v	x
		[kW]	[kW]			[mm]	[mm]	[mm]		[mm]	[mm]	[mm]	[mm]	[mm]	[mm]	[mm]	[mm]	[mm]	[mm]	[mm]	[mm]	[mm]	[mm]	[mm]	[mm]	[mm]	[mm]	[mm]	[mm]	[mm]	[mm]	[mm]	[mm]	[mm]
125-500/2	160L	11,0	-	150	125	245	270	703	M20 × 400	300	145	450	1010	760	710	370	525	115	1920	1150	1695	310	1010	760	710	370	525	115	1920	1150	1695	-	310	200
125-500/2	180M	18,5	-	150	125	245	270	703	M20 × 400	300	145	450	1010	760	710	370	525	115	1920	1150	1695	310	1010	760	710	370	525	115	1920	1150	1695	-	310	200
125-500/2	180L	15,0	-	150	125	245	270	703	M20 × 400	300	145	450	1010	760	710	370	525	115	1920	1150	1695	310	900	650	805	318	505	110	2000	1250	1780	-	280	200
125-500/2	200L	18,5	-	150	125	245	270	703	M20 × 400	300	145	450	1010	760	710	370	525	115	1920	1150	1695	310	1010	760	710	370	525	110	2100	1300	1880	-	330	200
125-500/2	200L	22,0	-	150	125	245	270	703	M20 × 400	300	145	450	1010	760	710	370	525	115	1920	1150	1695	310	1010	760	710	370	525	110	2100	1300	1880	-	330	200
125-500/2	200L	-	30,0	150	125	245	270	703	M20 × 400	300	145	450	1010	760	710	370	525	115	1920	1150	1695	310	1010	760	710	370	525	110	2100	1300	1880	-	330	200
125-500/2	225S	-	37,0	150	125	245	270	703	M20 × 400	300	145	450	1010	760	710	370	525	115	1920	1150	1695	310	1010	760	710	370	525	110	2100	1300	1880	-	330	200
125-500/2	225M	30,0	45,0	150	125	245	270	703	M20 × 400	300	145	450	1010	760	710	370	525	115	1920	1150	1695	310	1010	760	710	370	525	110	2100	1300	1880	-	330	200
125-500/2	250M	37,0	55,0	150	125	245	270	703	M20 × 400	300	145	450	1010	760	710	370	525	115	1920	1150	1695	310	1010	760	710	370	525	110	2100	1300	1880	-	330	200
125-500/2	280S	45,0	75,0	150	125	245	270	703	M20 × 400	300	145	450	900	650	605	318	505	110	2000	1250	1780	280	1110	860	810	420	545	110	2260	1450	2040	-	330	200
125-500/2	280M	55,0	90,0	150	125	245	270	703	M20 × 400	300	145	450	900	650	605	318	505	110	2000	1250	1780	280	1110	860	810	420	545	110	2260	1450	2040	-	330	200
150-500.1	200L	18,5	-	200	150	150	315	715	M20 × 400	450	170	450	820	570	525	272	550	115	1920	1150	1695	285	1010	760	710	365	570	110	2100	1300	1880	-	330	200
150-500.1	200L	22,0	-	200	150	150	315	715	M20 × 400	450	170	450	820	570	525	272	550	115	1920	1150	1695	285	1010	760	710	365	570	110	2100	1300	1880	-	330	200
150-500.1	225S	37,0	-	200	150	150	315	715	M20 × 400	450	170	450	820	570	525	272	550	115	1920	1150	1695	285	1010	760	710	365	570	110	2100	1300	1880	-	330	200
150-500.1	225M	30,0	-	200	150	150	315	715	M20 × 400	450	170	450	820	570	525	272	550	115	1920	1150	1695	285	1010	760	710	365	570	110	2100	1300	1880	-	330	200

Size	Motor	P_2		DN_1	DN_2	a	e	f	g	h_2	i_1	y	Coupling										Spacer-type coupling											
		960, 1160 rpm	1450, 1750 rpm										b_1	b_2	b_3	b_4	h_1	i_2	l_1	l_2	l_3	v	b_1	b_2	b_3	b_4	h_1	i_2	l_1	l_2	l_3	l_4	v	x
		[kW]	[kW]			[mm]	[mm]	[mm]		[mm]	[mm]	[mm]	[mm]	[mm]	[mm]	[mm]	[mm]	[mm]	[mm]	[mm]	[mm]	[mm]	[mm]	[mm]	[mm]	[mm]	[mm]	[mm]	[mm]	[mm]	[mm]	[mm]	[mm]	[mm]
150-500.1	250M	37,0	-	200	150	150	315	715	M20 × 400	450	170	450	900	650	605	313	550	110	2000	1250	1780	280	1110	860	810	415	590	110	2260	1450	2040	-	330	200
150-500.1	280S	45,0	-	200	150	150	315	715	M20 × 400	450	170	450	900	650	605	313	550	110	2000	1250	1780	280	1110	860	810	415	590	110	2260	1450	2040	-	330	200
150-500.1	280S	-	75,0	200	150	150	315	715	M20 × 400	450	170	450	900	650	605	313	550	110	2000	1250	1780	280	1110	860	810	415	590	110	2260	1450	2040	-	330	200
150-500.1	280M	55,0	90,0	200	150	150	315	715	M20 × 400	450	170	450	1010	760	710	365	570	110	2100	1300	1880	330	1110	860	810	415	590	110	2260	1450	2040	-	330	200
150-500.1	315S	75,0	110,0	200	150	150	315	715	M20 × 400	450	170	450	1010	760	710	365	570	110	2100	1300	1880	330	1110	860	800	410	610	110	2450	1650	2230	825	330	200
150-500.1	315M	-	132,0	200	150	150	315	715	M20 × 400	450	170	450	1110	860	810	415	590	110	2260	1450	2040	330	1110	860	800	410	610	110	2450	1650	2230	825	330	200
200-330	160L	11,0	-	250	200	200	315	715	M20 × 400	400	170	450	820	570	525	293	550	115	1920	1150	1695	285	900	650	605	333	550	110	2000	1250	1780	-	280	200
200-330	180M	15,0	18,5	250	200	200	315	715	M20 × 400	400	170	450	820	570	525	293	550	115	1920	1150	1695	285	900	650	605	333	550	110	2000	1250	1780	-	280	200
200-330	180L	15,0	22,0	250	200	200	315	715	M20 × 400	400	170	450	820	570	525	293	550	115	1920	1150	1695	285	900	650	605	333	550	110	2000	1250	1780	-	280	200
200-330	200L	18,5	-	250	200	200	315	715	M20 × 400	400	170	450	820	570	525	293	550	115	1920	1150	1695	285	1010	760	710	385	570	110	2100	1300	1880	-	330	200
200-330	200L	22,0	30,0	250	200	200	315	715	M20 × 400	400	170	450	820	570	525	293	550	115	1920	1150	1695	285	1010	760	710	385	570	110	2100	1300	1880	-	330	200
200-330	225S	-	37,0	250	200	200	315	715	M20 × 400	400	170	450	820	570	525	293	550	115	1920	1150	1695	285	1010	760	710	385	570	110	2100	1300	1880	-	330	200
200-330	225M	30,0	45,0	250	200	200	315	715	M20 × 400	400	170	450	820	570	525	293	550	115	1920	1150	1695	285	1010	760	710	385	570	110	2100	1300	1880	-	330	200
200-330	250M	-	55,0	250	200	200	315	715	M20 × 400	400	170	450	900	650	605	333	550	110	2000	1250	1780	280	1110	860	810	435	590	110	2260	1450	2040	-	330	200
200-330	280S	-	75,0	250	200	200	315	715	M20 × 400	400	170	450	900	650	605	333	550	110	2000	1250	1780	280	1110	860	810	435	590	110	2260	1450	2040	-	330	200
200-330	280M	-	90,0	250	200	200	315	715	M20 × 400	400	170	450	1010	760	710	385	570	110	2100	1300	1880	330	1110	860	810	435	590	110	2260	1450	2040	-	330	200
200-330	315S	-	110,0	250	200	200	315	715	M20 × 400	400	170	450	1010	760	710	385	570	110	2100	1300	1880	330	1110	860	800	430	610	110	2450	1650	2230	825	330	200
200-400	200L	18,5	-	250	200	180	290	715	M20 × 400	400	170	450	820	570	525	293	550	115	1920	1150	1695	285	1010	760	710	385	570	110	2100	1300	1880	-	330	200
200-400	200L	22,0	-	250	200	180	290	715	M20 × 400	400	170	450	820	570	525	293	550	115	1920	1150	1695	285	1010	760	710	385	570	110	2100	1300	1880	-	330	200
200-400	225M	30,0	-	250	200	180	290	715	M20 × 400	400	170	450	820	570	525	293	550	115	1920	1150	1695	285	1010	760	710	385	570	110	2100	1300	1880	-	330	200
200-400	250M	37,0	-	250	200	180	290	715	M20 × 400	400	170	450	900	650	605	333	550	110	2000	1250	1780	280	1110	860	810	435	590	110	2260	1450	2040	-	330	200
200-400	280S	45,0	75,0	250	200	180	290	715	M20 × 400	400	170	450	900	650	605	333	550	110	2000	1250	1780	280	1110	860	810	435	590	110	2260	1450	2040	-	330	200
200-400	280M	55,0	90,0	250	200	180	290	715	M20 × 400	400	170	450	1010	760	710	385	570	110	2100	1300	1880	330	1110	860	810	435	590	110	2260	1450	2040	-	330	200
200-400	315S	75,0	110,0	250	200	180	290	715	M20 × 400	400	170	450	1010	760	710	385	570	110	2100	1300	1880	330	1110	860	800	430	610	110	2450	1650	2230	825	330	200
200-400	315M	-	132,0	250	200	180	290	715	M20 × 400	400	170	450	1110	860	810	435	590	110	2260	1450	2040	330	1110	860	800	430	610	110	2450	1650	2230	825	330	200
200-500	225M	30,0	-	250	200	200	387	715	M20 × 400	450	195	450	1010	760	710	385	670	110	2000	1200	1780	330	1010	760	710	385	670	110	2100	1300	1880	-	330	200
200-500	250M	37,0	-	250	200	200	387	715	M20 × 400	450	195	450	1010	760	710	385	670	110	2000	1200	1780	330	1110	860	810	435	690	110	2260	1450	2040	-	330	200
200-500	280S	45,0	-	250	200	200	387	715	M20 × 400	450	195	450	1010	760	710	385	670	110	2100	1300	1880	330	1110	860	810	435	690	110	2260	1450	2040	-	330	200
200-500	280M	55,0	-	250	200	200	387	715	M20 × 400	450	195	450	1010	760	710	385	670	110	2100	1300	1880	330	1110	860	810	435	690	110	2260	1450	2040	-	330	200
200-500	315S	75,0	-	250	200	200	387	715	M20 × 400	450	195	450	1110	860	810	435	690	110	2260	1450	2040	330	1110	860	800	430	710	110	2450	1650	2230	825	330	200
200-500	315S	-	110,0	250	200	200	387	715	M20 × 400	450	195	450	1110	860	810	435	690	110	2260	1450	2040	330	1110	860	800	430	710	110	2450	1650	2230	825	330	200
200-500	315M	90,0	132,0	250	200	200	387	715	M20 × 400	450	195	450	1110	860	810	435	690	110	2260	1450	2040	330	1110	860	800	430	710	110	2450	1650	2230	825	330	200
250-330	180L	15,0	-	250	250	250	345	715	M20 × 400	400	195	450	1010	760	710	395	620	115	1920	1150	1695	310	1010	760	710	395	620	110	2100	1300	1880	-	330	200
250-330	200L	18,5	-	250	250	250	345	715	M20 × 400	400	195	450	1010	760	710	395	620	115	1920	1150	1695	310	1010	760	710	395	620	110	2100	1300	1880	-	330	200
250-330	200L	22,0	-	250	250	250	345	715	M20 × 400	400	195	450	1010	760	710	395	620	115	1920	1150	1695	310	1010	760	710	395	620	110	2100	1300	1880	-	330	200
250-330	225S	37,0	-	250	250	250	345	715	M20 × 400	400	195	450	1010	760	710	395	620	110	2000	1200	1780	330	1010	760	710	395	620	110	2100	1300	1880	-	330	200
250-330	225M	30,0	-	250	250	250	345	715	M20 × 400	400	195	450	1010	760	710	395	620	110	2000	1200	1780	330	1010	760	710	395	620	110	2100	1300	1880	-	330	200
250-330	250M	37,0	55,0	250	250	250	345	715	M20 × 400	400	195	450	1010	760	710	395	620	110	2000	1200	1780	330	1110	860	810	445	640	110	2240	1450	2040	-	330	200
250-330	280S	45,0	75,0	250	250	250	345	715	M20 × 400	400	195	450	1010	760	710	395	620	110	2100	1300	1880	330	1110	860	810	445	640	110	2240	1450	2040	-	330	200
250-330	280M	-	90,0	250	250	250	345	715	M20 × 400	400	195	450	1010	760	710	395	620	110	2100	1300	1880	330	1110	860	810	445	640	110	2240	1450	2040	825	330	200
250-330	315S	-	110,0	250	250	250	345	715	M20 × 400	400	195	450	1110	860	810	445	640	110	2260	1450	2040	330	1110	860	800	440	660	110	2450	1650	2230	825	330	200
250-330	315M	-	132,0	250	250	250	345	715	M20 × 400	400	195	450	1110	860	810	445	640	110	2260	1450	2040	330	1110	860	800	440	660	110	2450	1650	2230	825	330	200
250-400	200L	18,5	-	300	250	180	335	715	M20 × 400	480	195	450	1010	760	710	385	620	115	1920	1150	1695	310	1010	760	710	385	620	110	2100	1300	1880	-	330	200
250-400	200L	22,0	-	300	250	180	335	715	M20 × 400	480	195	450	1010	760	710	385	620	115	1920	1150	1695	310	1010	760	710	385	620	110	2100	1300	1880	-	330	200
250-400	225S	37,0	-	300	250	180	335	715	M20 × 400	480	195	450	1010	760	710	385	620	115	2000	1200	1780	330	1010	760	710	385	620	110	2100	1300	1880	-	330	200

Size	Motor	P_2		DN_1	DN_2	a	e	f	g	h_2	i_1	y	Coupling										Spacer-type coupling											
		960, 1160 rpm	1450, 1750 rpm										b_1	b_2	b_3	b_4	h_1	i_2	l_1	l_2	l_3	v	b_1	b_2	b_3	b_4	h_1	i_2	l_1	l_2	l_3	l_4	v	x
		[kW]	[kW]			[mm]	[mm]	[mm]		[mm]	[mm]	[mm]	[mm]	[mm]	[mm]	[mm]	[mm]	[mm]	[mm]	[mm]	[mm]	[mm]	[mm]	[mm]	[mm]	[mm]	[mm]	[mm]	[mm]	[mm]	[mm]	[mm]	[mm]	[mm]
250-400	225M	30,0	-	300	250	180	335	715	M20 × 400	480	195	450	1010	760	710	385	620	110	2000	1200	1780	330	1110	760	710	385	620	110	2100	1300	1880	-	330	200
250-400	250M	37,0	-	300	250	180	335	715	M20 × 400	480	195	450	1010	760	710	385	620	110	2000	1200	1780	330	1110	860	810	435	640	110	2260	1450	2040	-	330	200
250-400	280S	45,0	-	300	250	180	335	715	M20 × 400	480	195	450	1010	760	710	385	620	110	2100	1300	1880	330	1110	860	810	435	640	110	2260	1450	2040	-	330	200
250-400	280S	-	75,0	300	250	180	335	715	M20 × 400	480	195	450	1010	760	710	385	620	110	2100	1300	1880	330	1110	860	810	435	640	110	2260	1450	2040	-	330	200
250-400	280M	55,0	90,0	300	250	180	335	715	M20 × 400	480	195	450	1010	760	710	385	620	110	2100	1300	1880	330	1110	860	810	435	640	110	2260	1450	2040	-	330	200
250-400	315S	75,0	110,0	300	250	180	335	715	M20 × 400	480	195	450	1110	860	810	435	640	110	2260	1450	2040	330	1110	860	800	430	660	110	2450	1650	2230	825	330	200
250-400	315M	-	132,0	300	250	180	335	715	M20 × 400	480	195	450	1110	860	810	435	640	110	2260	1450	2040	330	1110	860	800	430	660	110	2450	1650	2230	825	330	200
250-500	280S	45,0	-	300	250	225	425	715	M20 × 400	500	220	450	1110	860	810	445	690	110	2260	1450	2040	330	1110	860	810	445	690	110	2260	1450	2040	-	330	200
250-500	280M	55,0	-	300	250	225	425	715	M20 × 400	500	220	450	1110	860	810	445	690	110	2260	1450	2040	330	1110	860	800	440	710	110	2450	1650	2230	825	330	200
250-500	315S	75,0	-	300	250	225	425	715	M20 × 400	500	220	450	1110	860	810	445	690	110	2260	1450	2040	330	1110	860	800	440	710	110	2450	1650	2230	825	330	200
250-500	315M	90,0	-	300	250	225	425	715	M20 × 400	500	220	450	1110	860	810	445	690	110	2260	1450	2040	330	1110	860	800	440	710	110	2450	1650	2230	825	330	200
300-360	225M	30,0	-	300	300	300	387	717	M20 × 400	450	220	450	1010	760	710	395	730	110	2000	1200	1780	330	1110	860	810	445	750	110	2260	1450	2040	-	330	250
300-360	250M	37,0	-	300	300	300	387	717	M20 × 400	450	220	450	1010	760	710	395	730	110	2100	1300	1880	330	1110	860	810	445	750	110	2260	1450	2040	-	330	250
300-360	280S	45,0	-	300	300	300	387	717	M20 × 400	450	220	450	1010	760	710	395	730	110	2100	1300	1880	330	1110	860	800	440	750	110	2450	1650	2230	825	330	250
300-360	280M	55,0	90,0	300	300	300	387	717	M20 × 400	450	220	450	1010	760	710	395	730	110	2100	1300	1880	330	1110	860	800	440	750	110	2450	1650	2230	825	330	250
300-360	315S	75,0	110,0	300	300	300	387	717	M20 × 400	450	220	450	1110	860	810	445	750	110	2260	1450	2040	330	1110	860	800	440	750	110	2450	1650	2230	825	330	250
300-360	315M	-	132,0	300	300	300	387	717	M20 × 400	450	220	450	1110	860	810	445	750	110	2260	1450	2040	330	1110	860	800	440	750	110	2450	1650	2230	825	330	250
300-400	250M	37,0	-	350	300	300	425	715	M20 × 400	500	220	450	1110	860	810	445	750	110	2260	1450	2040	330	1110	860	810	455	750	110	2260	1450	2040	-	330	250
300-400	280S	45,0	-	350	300	300	425	715	M20 × 400	500	220	450	1110	860	810	445	750	110	2260	1450	2040	330	1110	860	800	450	770	110	2450	1650	2230	825	330	250
300-400	280M	55,0	-	350	300	300	425	715	M20 × 400	500	220	450	1110	860	810	445	750	110	2260	1450	2040	330	1110	860	800	450	770	110	2450	1650	2230	825	330	250
300-400	315S	75,0	-	350	300	300	425	715	M20 × 400	500	220	450	1110	860	810	445	750	110	2260	1450	2040	330	1110	860	800	450	770	110	2450	1650	2230	825	330	250
300-400	315S	-	110,0	350	300	300	425	715	M20 × 400	500	220	450	1110	860	810	445	750	110	2260	1450	2040	330	1110	860	800	450	770	110	2450	1650	2230	825	330	250
300-400	315M	90,0	132,0	350	300	300	425	715	M20 × 400	500	220	450	1110	860	810	445	750	110	2260	1450	2040	330	1110	860	800	450	770	110	2450	1650	2230	825	330	250
300-500	315S	75,0	-	350	300	300	450	715	M20 × 400	500	220	450	1110	860	810	445	750	110	2260	1450	2040	330	1110	860	800	450	770	110	2450	1650	2230	825	330	250
300-500	315M	75,0	-	350	300	300	450	715	M20 × 400	500	220	450	1110	860	810	445	750	110	2260	1450	2040	330	1110	860	800	450	770	110	2450	1650	2230	825	330	250

Pump

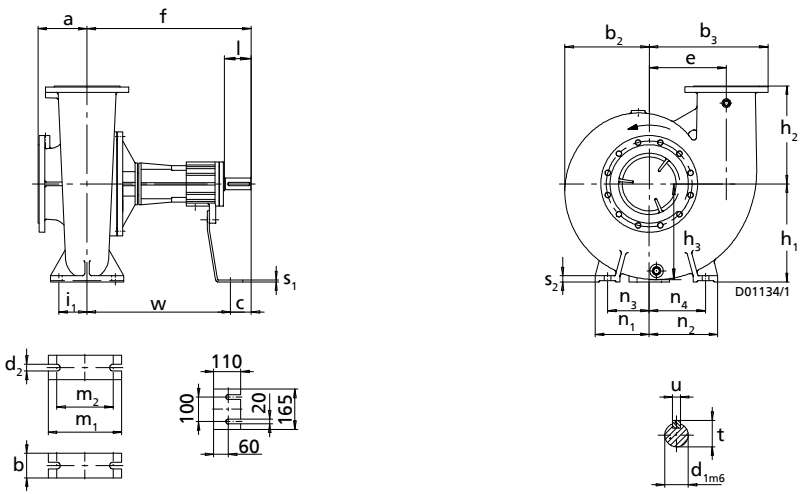

Fig. 4: Pump dimensions

Table 23: Dimensions

Size	DN_1	DN_2	a	b	b_2	b_3	c	d_{1m6}	d_2	e	f	h_1	h_2	h_3	i_1	l	m_1	m_2	n_1	n_2	n_3	n_4	s_1	s_2	t	u	v
			[mm]	[mm]	[mm]	[mm]	[mm]	[mm]	[mm]	[mm]	[mm]	[mm]	[mm]	[mm]	[mm]	[mm]	[mm]	[mm]	[mm]	[mm]	[mm]	[mm]	[mm]	[mm]	[mm]	[mm]	[mm]
125-500/2	150	125	245	120	290	400	121	60	24	270	703	355	300	297	95	140	250	190	270	300	220	250	6	22	64	18	582
150-500.1	200	150	150	100	300	470	115	60	28	315	715	400	450	359	115	140	300	230	240	260	190	210	6	25	64	18	600
200-330	250	200	200	100	360	485	120	60	28	315	715	400	400	390	115	140	300	230	220	280	170	230	8	25	64	18	595
200-400	250	200	180	130	340	460	120	60	28	290	715	400	400	358	115	140	300	230	220	280	155	215	8	25	64	18	595
200-500	250	200	200	130	410	560	115	60	28	387	715	500	450	497	140	140	350	280	320	380	255	315	20	25	64	18	600
250-330	250	250	250	130	400	550	120	60	34	345	715	450	400	445	140	140	350	280	310	390	245	325	10	25	64	18	595
250-400	300	250	180	130	360	540	120	60	34	335	715	450	480	400	140	140	350	280	320	380	255	315	10	25	64	18	595
250-500	300	250	225	130	420	630	115	60	34	425	715	500	500	514	162,5	140	400	325	360	440	295	375	20	32	64	18	600
300-360	300	300	300	160	460	640	122	60	34	387	717	560	450	505	162,5	140	400	325	310	390	230	310	20	32	64	18	595
300-400	350	300	300	160	460	650	120	60	34	425	715	560	500	540	162,5	140	400	325	350	450	270	370	20	32	64	18	595
300-500	350	300	300	160	470	690	115	60	34	450	715	560	500	581	162,5	140	400	325	350	450	270	370	20	32	64	18	600

Connections

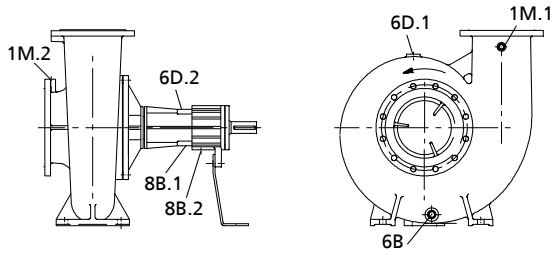

Fig. 5: Connections

1M.1/.2	Pressure gauge	6D.2	Fluid priming and venting
6B	Fluid drain	8B.1	Fluid drain
6D.1	Fluid priming and venting	8B.2	Leakage drain

Table 24: Thread sizes of the connections

Size	1M.1	1M.2	6B	6D.1	6D.2	8B.1	8B.2
All	G 1/2	G 1/2	G 3/4[14)]	G 3/4[14)]	G 1/4	G 1/4	G 1/4

Flange design

Table 25: Flange design to EN 1092-2

Material variant	Standard	Nominal diameter	Pressure class	Material
SG, SC1	EN 1092-2	DN 125, DN 150, DN 200, DN 250, DN 300, DN 350	PN 16	Nodular cast iron, EN-GJS-400-15 / A536 GR 60-40-18

Table 26: Optional: flange design to ASME Class 125, drilled

Size	Suction nozzle	Discharge nozzle
125-500/2	✘	✘
125-500.1	✘	✘
200-250	✘	✘
200-400	✘	✘
200-500	✘	✘
250-330	✘	✘
250-400	-	✘
250-500	-	✘
300-360	-	-
300-400	✘	-
300-500	✘	-

14 Size 125-500/2: G 1/2

Interchangeability of pump components

Components featuring the same number in a column are interchangeable.

Table 27: Interchangeability of pump components

Size	Shaft units	Description													
		Volute casing	Casing cover	Support foot (carbon bearing)	Shaft	Impeller	Deep groove ball bearing	Bearing bracket (carbon bearing)	Bearing cover (without fan)	Mechanical seal	Mating ring carrier	Casing wear ring, suction side	Casing wear ring, discharge side	Bearing sleeve (carbon bearing)	Bearing bush (carbon bearing)
		Part No.													
		102	161	183	210	230	321	330	360.02	433	476	501.01	501.02	529.21	545.21
125-500/2	65	○	○	○	○	○	1	1	1	1	1	○	○	1	1
150-500.1	65	○	1	○	1	○	1	1	1	1	1	1	1	1	1
200-330	65	○	4	○	1	○	1	1	1	1	1	○	4	1	1
200-400	65	○	○	○	1	○	1	1	1	1	1	2	2	1	1
200-500	65	○	1	○	1	○	1	1	1	1	1	○	1	1	1
250-330	65	○	○	○	1	○	1	1	1	1	1	○	4	1	1
250-400	65	○	○	○	1	○	1	1	1	1	1	○	1	1	1
250-500	65	○	2	○	1	○	1	1	1	1	1	○	1	1	1
300-360	65	○	3	○	1	○	1	1	1	1	1	○	1	1	1
300-400	65	○	3	○	1	○	1	1	1	1	1	3	1	1	1
300-500	65	○	2	○	1	○	1	1	1	1	1	3	1	1	1

Recommended spare parts stock for 2 years' operation to DIN 24296

Table 28: Quantity of spare parts for recommended spare parts stock

Part No.	Description	Number of pumps (including stand-by pumps)						
		2	3	4	5	6 and 7	8 and 9	10 and more
171	Diffuser[15)]	1	1	1	2	2	2	20 %
210	Shaft	1	1	1	2	2	2	20 %
230	Impeller[16)]	1	1	1	2	2	2	20 %
321	Radial ball bearing	1	1	2	2	3	4	100 %
330	Bearing bracket	-	-	-	-	-	1	2 pcs.
400./...	Gaskets (set)	4	6	8	8	9	12	150 %
412	O-ring[15)]	4	6	8	8	9	12	150 %
433	Mechanical seal	1	1	2	2	2	3	25 %
502.01/.02	Casing wear ring	2	2	2	3	3	4	50 %
-	Torque-transmitting coupling elements (set)	1	1	2	2	3	4	30 %

Scope of supply

Depending on the model, the following items are included in the scope of supply:

- Pump
- Drive
- Baseplate
- Coupling
- Coupling guard

1223.5/03-EN

15 For Etanorm-RSY 125-500/2 only
16 Double quantity for Etanorm-RSY 125-500/2

General assembly drawing with list of components

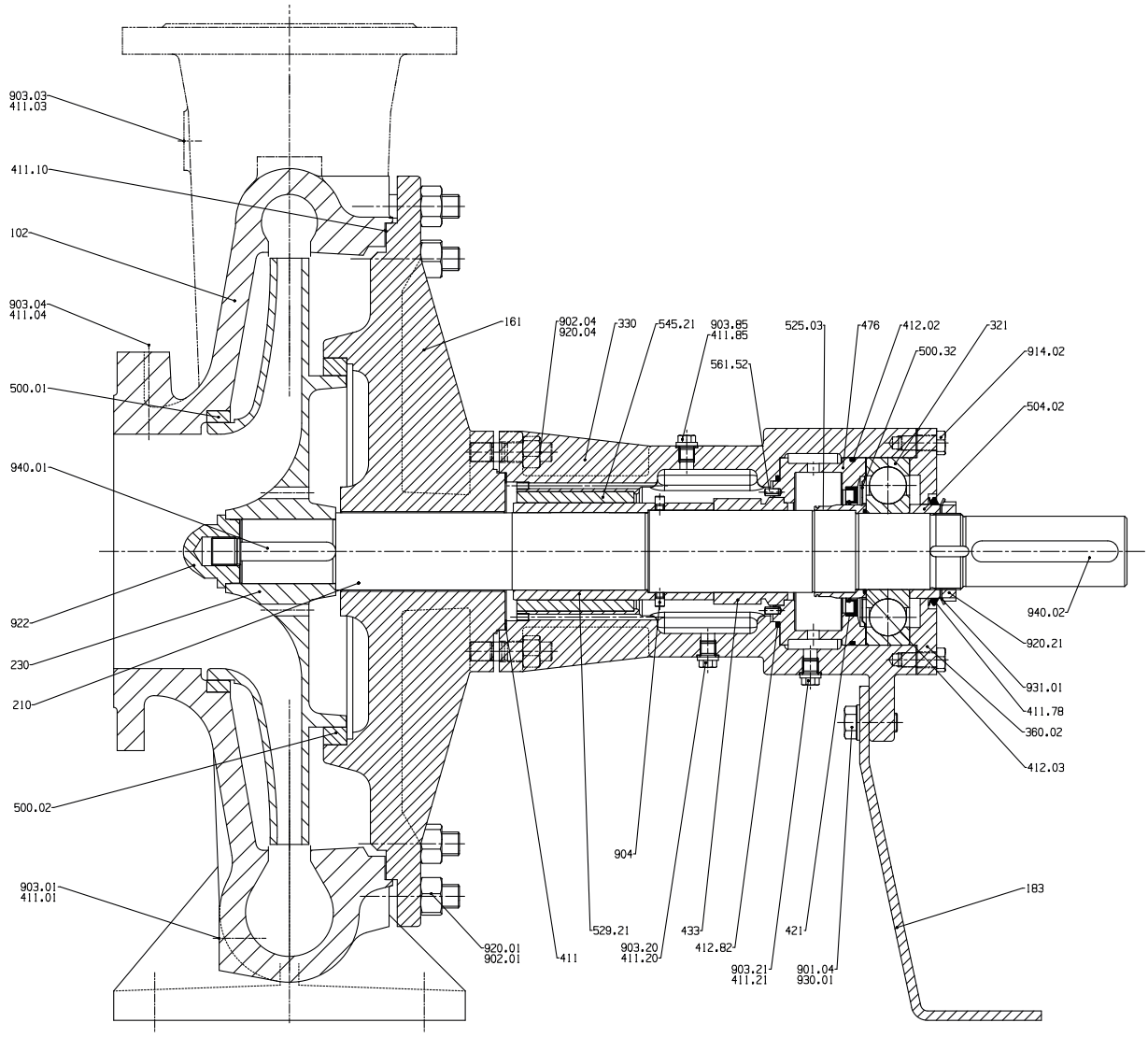

Fig. 6: General assembly drawing

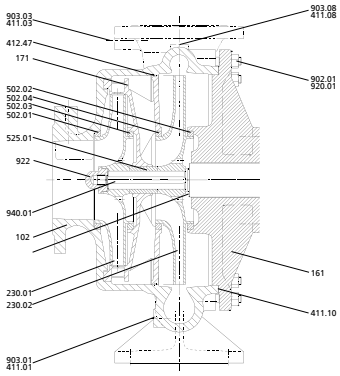

Double-stage version

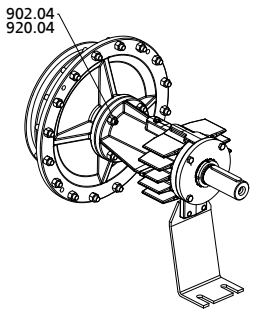

Back pull-out unit

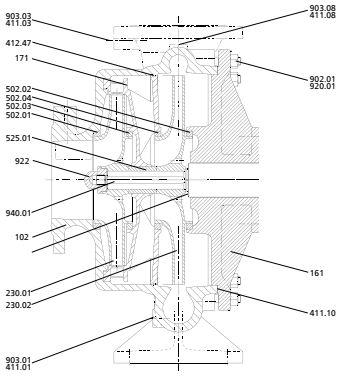

Double-stage version

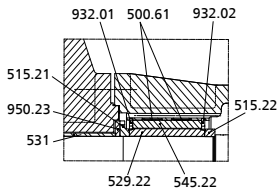

Version with SiC bearing

Table 29: List of components

Part No.	Comprising	Description
102	102	Volute casing
	411.01/.03/.04/.08	Joint ring
	502.01	Casing wear ring
	902.01	Stud
	903.01/.03/.04/.08	Screw plug
	920.01	Hexagon nut
161	161	Casing cover

Part No.	Comprising	Description
161	411.10	Joint ring
	502.02	Casing wear ring
	920.01	Hexagon nut
	902.04	Stud
171[17]	171	Diffuser
183	183	Support foot
	901.04	Hexagon head bolt
	550.41	Disc
210	210	Shaft
	940.01/.02	Key
	412.82	O-ring
230.01/.02[17]	230.01/.02	Impeller
321	321	Deep groove ball bearing
330	330	Bearing bracket
330	330	Bearing bracket
	210	Shaft
	321	Deep groove ball bearing
	360.02	Bearing cover
	411.11/.20/.21/.85	Sealing element
	412.02/.03/.82	O-ring
	421	Lip seal
	433	Mechanical seal
	476	Mating ring carrier
	500.32	Ring
	504.02	Spacer ring
	525.03	Spacer sleeve
	529.21	Bearing sleeve
	545.21	Bearing bush
	561.52	Grooved pin
	903.20/.21/.85	Screw plug
	920.04	Hexagon nut
	920.21	Nut
	922	Impeller nut
	940.01/.02	Key
	931.01	Lock washer
360.02	360.02	Bearing cover
	901.01/.02	Hexagon head bolt
411.01/.03/.04/.08/.10/.11/.20/.21/.85	411.01/.03/.04/.08/.10/.11/.20/.21/.85	Joint ring
412.47[17]	412.47[17]	O-ring
412.02/.03/82	412.02/.03/82	O-ring
421	421	Lip seal
433	433	Mechanical seal
476	476	Mating ring carrier
	561.52	Grooved pin
500.32	500.32	Nilos ring
500.61 [18]	500.61	Tolerance sleeve
502.01/.02/.03[17]/.04[17]	502.01/.02/.03[17]/.04[17]	Casing wear ring
504.02	504.02	Spacer ring
515.21/.22 [18]	515.21/.22 [18]	Locking ring
525.01[17] /.03	525.01[17]	Spacer sleeve
529.21	529.21	Bearing sleeve
529.22 [18]	529.22 [18]	Bearing sleeve
531[18]	531[18]	Locking sleeve
545.21	545.21	Bearing bush

17 For Etanorm-RSY 125-500/2 only
18 For SiC bearing only

Part No.	Comprising	Description
545.22 [18)]	545.22 [18)]	Bearing bush
550.41	550.41	Disc
561.52	561.52	Grooved pin
901.02/.04	901.02/.04	Hexagon head bolt
902.01/.04	902.01/.04	Stud
903.01/.03/.04/.08/.20/.21/.85	903.01/.03/.04/.08/.20/.21/.85	Screw plug
904	904	Grub screw
920.01/.04	920.01/.04	Hexagon nut
920.21	920.21	Nut
922	922	Impeller nut
931.01	931.01	Lock washer
932.01/.02[18)]	932.01/.02[18)]	Circlip
940.01/.02	940.01/.02	Key
950.23 [18)]	950.23 [18)]	Disc spring

Glossary

Back pull-out design

The complete back pull-out unit can be pulled out without having to remove the pump casing from the piping.

IE2

Efficiency class to IEC 60034-30: 2 = High Efficiency (IE = International Efficiency)

IE3

Efficiency class to IEC 60034-30: 3 = Premium Efficiency (IE = International Efficiency)

IE4

Efficiency class to IEC TS 60034-30-2:2016 = Super Premium Efficiency (IE = International Efficiency)

IE5

Efficiency class to IEC TS 60034-30-2:2016 = Ultra Premium Efficiency (IE = International Efficiency)

1223.5/03-EN

2023-05-17

1223.5/03-EN

LENNTECH
WATER TREATMENT SOLUTIONS
info@lenntech.com Tel. +31-152-610-900
www.lenntech.com Fax. +31-152-616-289

KSB