Thermal Oil / Hot Water Pump

Etanorm SYT

Fixed Speed / Variable Speed
50 Hz / 60 Hz
Europe (EU)
Middle East (ME)
North Africa (NA)

Type Series Booklet

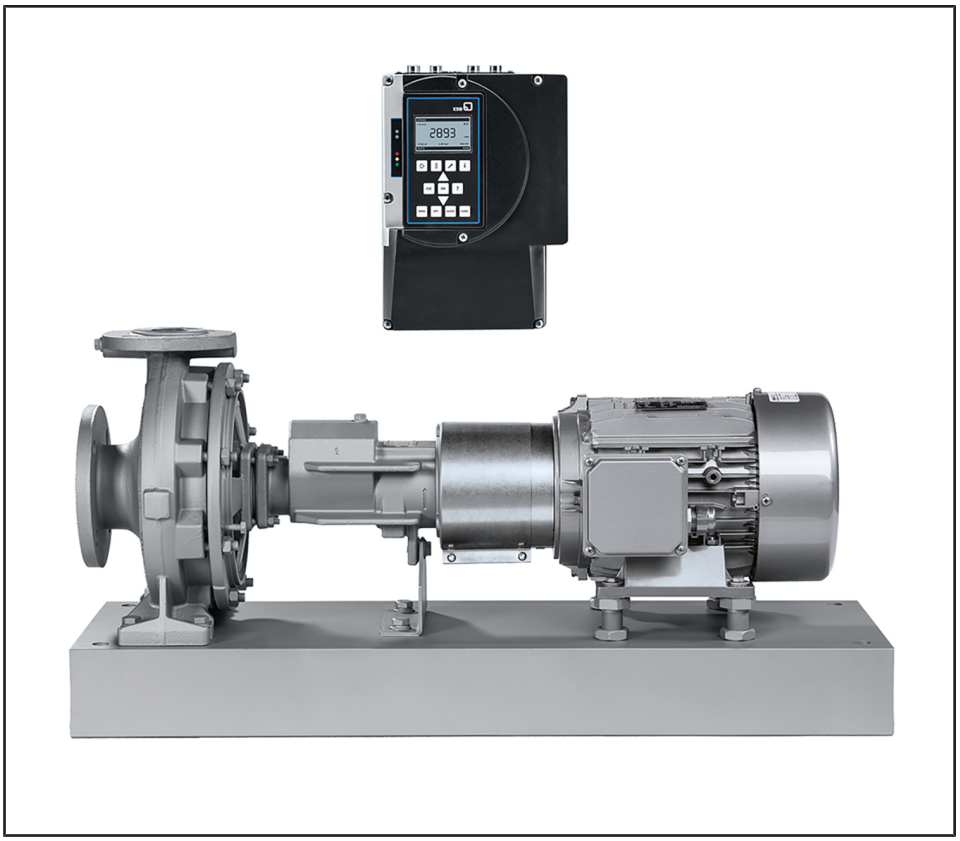

Legal information/Copyright

Type Series Booklet Etanorm SYT

All rights reserved. The contents provided herein must neither be distributed, copied, reproduced, edited or processed for any other purpose, nor otherwise transmitted, published or made available to a third party without the manufacturer's express written consent.

Subject to technical modification without prior notice.

© KSB SE & Co. KGaA, Frankenthal 2024-03-20

Contents

Centrifugal Pumps with Shaft Seal ... 4
Thermal Oil Pumps / Hot Water Pumps ... 4
Etanorm SYT (EU / ME / NA) ... 4
Main applications ... 4
Fluids handled ... 4
Further information on fluids handled ... 4
Operating data ... 4
Design details ... 5
Designation ... 7
Materials ... 9
Coating and preservation ... 9
Product benefits ... 9
Product information ... 9
Product information as per Regulation No. 1907/2006 (REACH) ... 9
Acceptance tests and warranty ... 9
Overview of product features / selection tables ... 10
Overview of variants ... 10
Overview of fluids handled ... 11
Bearings ... 11
Overview of functions for variable speed version ... 12
Pressure limits and temperature limits ... 13
Technical data ... 14
Etanorm SYT ... 14
Selection charts ... 15
Etanorm SYT (fixed speed version), n = 2900 rpm ... 15
Etanorm SYT (fixed speed version), n = 1450 rpm ... 15
Etanorm SYT (fixed speed version), n = 960 rpm ... 16
Etanorm SYT (fixed speed version), n = 3500 rpm ... 16
Etanorm SYT (fixed speed version), n = 1750 rpm ... 17
Etanorm SYT (fixed speed version), n = 1160 rpm ... 17
Dimensions and connections ... 18
Pump (Fig. 0 bare-shaft pump) ... 18
PumpDrive 2 ... 20
Auxiliary connections for double mechanical seal ... 21
Auxiliary connections for double mechanical seal and monitoring equipment ... 21
Auxiliary connections for single mechanical seal and monitoring equipment ... 21
Connections ... 22
Flange design ... 24
Scope of supply ... 24
General assembly drawings ... 25
Version with bearing bracket WS_25_LS ... 25
Version with bearing bracket WS_25_LS with double mechanical seal ... 26
Version with bearing brackets WS_25_LS / WS_55_LS with SiC plain bearing ... 27
Version with bearing brackets WS_35_LS / WS_55_LS ... 28
Version with bearing brackets WS_35_LS / WS_55_LS with double mechanical seal ... 29
Version with bearing bracket WS_35_LS with SiC plain bearing ... 30

Centrifugal Pumps with Shaft Seal

Thermal Oil Pumps / Hot Water Pumps

Etanorm SYT (EU / ME / NA)

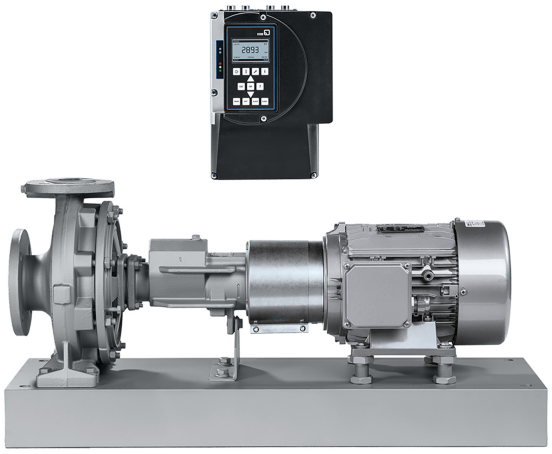

The product illustrated as an example may include options incurring a surcharge.

Main applications

- Heat transfer systems
- Hot water circulation

Fluids handled

- Hot water
- Thermal oil

Further information on fluids handled

Overview of fluids handled (⇨ Page 11)

Operating data

Table 1: Operating properties in standard applications

Characteristic		Value	
		50 Hz	60 Hz
Flow rate	Q [m³/h]	≤ 625	≤ 754
Head	H [m]	≤ 102	≤ 100
Fluid temperature	T [°C]	≥ -30	≥ -30
Thermal oil		≤ +350	≤ +350
Fluid temperature Hot water		≤ +180	≤ +180
Operating pressure	p [bar]	≤ 16	≤ 16

Table 2: Operating properties in marine applications, to DNV GL

Characteristic		Value		
		Class I[1]	Class II[2]	Class III[3]
Steam				
Design pressure	p [bar]	> 16	≤ 16	≤ 7
Design temperature	T [°C]	> 300	≤ 300	≤ 170
Thermal oil				
Design pressure	p [bar]	> 16	≤ 16	≤ 7
Design temperature	T [°C]	> 300	≤ 300	≤ 150
Fuel oil, lubricating oil, combustible hydraulic oil				
Design pressure	p [bar]	> 16	≤ 16	≤ 7
Design temperature	T [°C]	> 150	≤ 150	≤ 60
Other fluids [4]				
Design pressure	p [bar]	> 40	≤ 40	≤ 16
Design temperature	T [°C]	> 300	≤ 300	≤ 200

Loading pipes for flammable liquids on offshore supply vessels belong to the same piping class as the fuel. Class II piping suffices outside of category A engine rooms.

Pipes for toxic or corrosive fluids belong to piping class I.

Loading pipes for chemicals or liquefied gases are not specified in the table.

1 At least one condition must be met for class I piping (design pressure or design temperature).
2 Both conditions must be met for class II piping (design pressure and design temperature).
3 Both conditions must be met for class III piping (design pressure and design temperature).
4 Cargo oil pipes on oil tankers and open pipe outlets (drains, overflows, ventilation, boiler drain pipes, etc.), irrespective of pressure and temperature, belong to class III.

1227.5/12-EN

Design details

Design

- Volute casing pump
- Horizontal installation
- Back pull-out design
- Single-stage
- Dimensions and ratings to EN 733
- Fixed speed version (without PumpDrive 2 / PumpDrive 2 Eco / PumpDrive R) / variable speed version (with PumpDrive 2 / PumpDrive 2 Eco / PumpDrive R)

Pump casing

- Radially split volute casing
- Volute casing with integrally cast pump feet
- Replaceable casing wear rings

Drive (fixed speed version)

Standard design:

- KSB/Innomotics surface-cooled IEC three-phase current squirrel-cage motor
- Efficiency class IE2 (size 71/80) / IE3 (from size 90) to IEC 60034-30
- Rated voltage (50 Hz) 230 V / 400 V ≤ 2.20 kW
- Rated voltage (50 Hz) 400 V / 690 V ≥ 3.00 kW
- Rated voltage (60 Hz) - / 460 V ≤ 2.20 kW
- Rated voltage (60 Hz) 460 V / - ≥ 3.00 kW
- Type of construction IM B3
- Enclosure IP55
- Duty type: continuous duty S1
- Thermal class F with temperature sensor, 1 PTC thermistor (size 80/90) / 3 PTC thermistors (from size 100)

Explosion-proof design:

- KSB surface-cooled IEC three-phase current squirrel-cage motor
- Efficiency class IE2 / IE3 to IEC 60034-30
- Rated voltage (50 Hz) 230 V / 400 V ≤ 2.50 kW
- Rated voltage (50 Hz) 400 V / 690 V ≥ 3.30 kW
- Rated voltage (60 Hz) - / 460 V ≤ 2.50 kW
- Rated voltage (60 Hz) 460 V / - ≥ 3.30 kW
- Type of construction IM B3
- Enclosure IP55
- Duty type: continuous duty S1
- II 3G Ex ec IIC T3 Gc
- II 2G Ex eb IIC T3 Gb
- II 2G Ex db (eb) IIB T4 Gb
- II 2G Ex db (eb) IIC T4 Gb

Drive (variable speed version)

KSB SuPremE motor:

- Surface-cooled KSB SuPremE motor, IEC-compatible, magnetless synchronous reluctance motor[5] (PumpDrive required)
- Efficiency class IE4 / IE5 to IEC TS 60034-30-2:2016
- Mounting points to EN 50347:2001
- Envelope dimensions to DIN VDE 42673-4:2011-07
- Type of construction IM B3
- Enclosure IP55
- Duty type: continuous duty S1
- Thermal class F with temperature sensor, 3 PTC thermistors
- Shaft centreline height 71 to 225 mm
- Rated power 0.55 kW to 45 kW
- Rated speed 1500 rpm or 3000 rpm
- Frequency 50 Hz / 60 Hz (PumpDrive input)
- Voltage 380 V to 480 V (PumpDrive input)

KSB SuPremE C1/D1:

- With terminal box for connecting to PumpDrive 2 or PumpDrive R for mounting on walls and in control cabinets

KSB SuPremE C2/D2:

- Equipped for being fitted with a motor-mounted PumpDrive 2

PumpDrive 2 / PumpDrive 2 Eco:

- Self-cooling frequency inverter of modular design for the continuously variable speed control of asynchronous motors and synchronous reluctance motors by means of analog standard signals, a field bus or the control panel
- Identical design of frequency inverter for the mounting types motor mounting (only for fluid temperature ≤ 110 °C), wall mounting and cabinet mounting
- Mains voltage 3~ 380 V AC -10 % to 480 V AC +10 %
- Mains frequency 50 Hz to 60 Hz ± 2 %

PumpDrive R:

- Self-cooling frequency inverter of modular design for the continuously variable speed control of asynchronous motors and synchronous reluctance motors, such as KSB SupremE motors or permanent magnet synchronous motors, by means of analog standard signals, a field bus or the control panel
- Identical design of frequency inverter for the mounting types wall mounting and cabinet mounting
- Mains voltage 3~ 380 V AC -10 % to 480 V AC +10 %
- Extended mains voltage range (on request)
- Mains frequency 50 Hz to 60 Hz ± 2 %
- Extended power range with a nominal power of 110 kW (standard) or 1400 kW (on request)

Shaft seal

- KSB single mechanical seal
- KSB double mechanical seal
- To EN 12756

Impeller type

- Closed radial impeller with multiply curved vanes

Bearings

- Various application-oriented bearings (⇨ Page 11)

5 Motor sizes 0.55 kW / 0.75 kW with 1500 rpm are designed with permanent magnets.

Drive end:

- Grease-packed deep groove ball bearing

Pump end:

- Carbon bearing / SiC/SiC bearing lubricated by fluid handled

1227.5/12-EN

Designation

Table 3: Designation example

Position																																			
1	2	3	4	5	6	7	8	9	10	11	12	13	14	15	16	17	18	19	20	21	22	23	24	25	26	27	28	29	30	31	32	33	34	35	36	37
E	T	N	Y	0	5	0	-	0	3	2	-	1	2	5	1	S	G	S	D	B	0	8	L	D	2	0	0	7	5	2	B	P	D	2	E	
See name plate and data sheet																										See data sheet										

Table 4: Designation key

Position	Code	Description	
1-4	Pump type		
	ETNY	Etanorm SYT	
5-16	Size, e.g.		
	050	Nominal suction nozzle diameter [mm]	
	032	Nominal discharge nozzle diameter [mm]	
	1251	Nominal impeller diameter [mm]	
17	Pump casing material		
	E	Cast steel	GP240GH+N / A216 Gr. WCB
	S	Nodular cast iron	EN-GJS-400-15
18	Impeller material		
	C	Stainless steel	1.4408 / A743 CF8M
	G	Cast iron	EN-GJL-250/A48 Cl. 35B
19	Design		
	D	DNV	
	S	Standard	
	X	Non-standard (BT3D, BT3)	
	Y	Marine version (e.g. to BV or ABS)	
20	Casing cover		
	D	Casing cover	
21	Shaft seal type		
	B	Dead-end arrangement	
22-23	Seal code, single mechanical seal		
	08	AQ1V7GG	NU033M0-4EYS
	66	Q7Q7EGG	NU033M0-4EYS
	Seal code, double mechanical seal in tandem arrangement		
	25	AQ1V7GG	KU033M0-4EYT
		AQ1V7GG	KU033M0-4EYT
24	Bearing bracket		
	L	Version for heat transfer fluid, with leakage barrier	
	Y	Version for heat transfer fluid	
25	Scope of supply		
	A	Pump only (Fig. 0)	
	B	Pump, baseplate	
	C	Pump, baseplate, coupling, coupling guard	
	D	Pump, baseplate, coupling, coupling guard, motor	
	E	Back pull-out unit	
26	Shaft unit		
	2	Shaft unit 25, bearing bracket LS (standard)	
	3	Shaft unit 35, bearing bracket LS (standard)	
	5	Shaft unit 55, bearing bracket LS (standard)	
27-30	Motor rating P_N [kW]		
	0075	0,75	
	...	...	
	1320	132,00	
31	Number of motor poles		
32	Product generation		
	B	Etanorm SYT 2014	
33-36	Version		
	-	Fixed speed version	
	PD2	Variable speed version, with PumpDrive 2	

Position	Code	Description
33-36	PD2E	Variable speed version, with PumpDrive 2 Eco

1227.5/12-EN

Materials

Table 5: Symbols key

Symbol	Description
✘	Standard
-	Version not available / not feasible

Table 6: Overview of available materials

Part No. (⇨ Page 25)	Description	Material	Material variant	
			SG	SC
102	Volute casing	Nodular cast iron JS1030 / 536 Gr. 60-40-18	✘	✘
161	Casing cover	Nodular cast iron JS1030 / A536 Gr. 60-40-18	✘	✘
210	Shaft	Chrome steel 1.4021 + QTHRC50	✘	✘
230	Impeller	Grey cast iron JL1040 / A 48 Cl. 35B	✘	-
		Stainless steel 1.4408 / A743 Gr. CF8M	-	✘
310	Plain bearing	Carbon KHK	✘	✘
		SiC / SiC	✘	✘
330	Bearing bracket	Nodular cast iron JS1030 / A536 Gr. 60-40-18	✘	✘
411.10/.15	Sealing elements	BU9593 / HDR	✘	✘
502.01	Casing wear ring, suction side	Grey cast iron JL1040 / Cl.	✘	✘
502.02	Casing wear ring, discharge side	Grey cast iron JL1040 / Cl.	✘	✘
902	Studs	Steel 8.8	✘	✘
903	Plug	Steel	✘	✘
920	Nut	8+A2A / 8+B633 SC1 TP3	✘	✘
920.95	Impeller nut	8	✘	✘

Coating and preservation

- Coating and preservation to KSB standard

Product benefits

- Designed to deliver reliable operation with mineral and synthetic thermal oils up to 350 °C
- Maximum operating reliability ensured by KSB single mechanical seal and KSB double multi-spring mechanical seals in tandem arrangement as well as quench systems tailored to any application
- Safety barriers: Optimised contour ensures reliable removal of leakage at the mechanical seal; additional shaft seal ring, durable grease-packed bearings, confined sealing elements and effective heat barrier
- Reliable venting during pump operation by patented KSB VenJet® technology
- Individual requirements are met with maximum efficiency, and operating costs are reduced: impeller trimming, variable speed operation / intelligent control by KSB frequency inverters and KSB motors up to IE5, maximum hydraulic pump efficiency and low NSPHreq
- Wide range of applications through compliance with EN PN16 and ASME, ATEX-compliant version, carbon and SiC/SiC plain bearings, various marine versions and version with fan impeller for efficient cooling
- The "cracked-joint" design of the coupling hubs enables straightforward assembly and dismantling of the coupling. The double Cardan coupling compensates shaft offset.
- Continuous leakage monitoring by innovative KSB Leakage Sensor. Predictive maintenance avoids unscheduled downtimes.
- Vibration, pressure and temperature measurement connections provided as standard. Sensor kit can be ordered together with the pump.

Product information

Product information as per Regulation No. 1907/2006 (REACH)

For information as per European chemicals regulation (EC) No. 1907/2006 (REACH) see https://www.ksb.com/en-global/company/corporate-responsibility/reach.

Acceptance tests and warranty

Materials inspection and testing:

- Test report 2.2 on request

Final inspection:

- Inspection certificate 3.1 to EN 10204 on request

Hydraulic test against surcharge

- Duty point to ISO 9906/2B
- NPSH test

Other inspections/tests on request

Warranty:

- Warranties are given within the scope of the valid terms and conditions of sale and delivery.

Overview of product features / selection tables

Overview of variants

Other designs on request

Table 7: Overview of Etanorm SYT / Etabloc SYT / Etaline SYT variants

Design	102 / Volute casing	230 / Impeller	Mechanical seal	T [°C]	Main applications									
					Chemical industry / pharmaceutical industry	Plastic processing	Timber industry / paper industry / cardboard industry	Soap industry / laundry agent industry	Food industry	Textile industry	Mineral oil industry	Bitumen industry / tar processing industry	Metal processing industry	Aluminium industry
SG08	Nodular cast iron EN-GJS-400-15/ 536 Gr. 60-40-18	Grey cast iron EN-GJL-250/ A 48 Cl. 35B	Mech. seal AQ1V7GG	≥ -30 - ≤ +180[6] / 350[7]	✗	✗	✗	✗	✗	✗	✗	✗	✗	✗
SC08	Nodular cast iron EN-GJS-400-15/ 536 Gr. 60-40-18	Chrome steel 1.4408/ A 743 Gr. CF8M	Mech. seal AQ1V7GG	≥ -30 - ≤ +180[6] / 350[7]	✗	✗	✗	✗	✗	✗	✗	✗	✗	✗

1227.5/12-EN

6 High-temperature hot water
7 Thermal oil

Overview of fluids handled

Table 8: Symbols key

Symbol	Description
✗	Standard
-	Version not available / not feasible

Table 9: Excerpt from the overview of fluids handled with associated material variants

Fluid handled	Application limits[8]	Materials Casing / impeller		Shaft seal		
		Nodular cast iron / grey cast iron	Nodular cast iron / stainless steel	Single mechanical seal AQ1V7GG	Single mechanical seal Q7Q7EGG	Double mechanical seal Tandem AQ1V7GG / AQ1V7GG
		SG	SC	Code 08	Code 66	Code 25
High-temperature hot water[9]	t ≤ 180 °C p ≤ 16 bar	✗	✗	✗	-	-
Water/glycol mixture	t ≤ 180 °C p ≤ 16 bar	-	-	-	✗	-
Thermal oil on mineral oil basis	t ≥ -30 to 350 °C p ≤ 16 bar	✗	✗	✗	-	✗
Thermal oil on synthetic basis, vapour pressure ≤ 1 bar at operating temperature	t ≥ -30 to 350 °C p ≤ 16 bar	✗	✗	✗	-	✗
Thermal oil on synthetic basis, vapour pressure ≥ 1 bar at operating temperature	t ≥ -30 to 350 °C p ≤ 16 bar	✗	✗	-	-	✗

Bearings

Bearings used

Table 10: Overview

Version	Bearing bracket	Pump end	Drive end
Standard plain bearing (lubricated by fluid handled)	WS_25_LS	Carbon (KHK)	-
	WS_35_LS	Carbon (KHK)	-
	WS_55_LS	Carbon (KHK)	-
Optional plain bearing (lubricated by fluid handled)	WS_25_LS	SiC / SiC	-
	WS_35_LS	SiC / SiC	-
	WS_55_LS	SiC / SiC	-
Rolling element bearing (grease lubrication / grease-packed for life Klüber Asonic HQ 72-102)	WS_25_LS	-	DIN 625
	WS_35_LS	-	DIN 625
	WS_55_LS	-	DIN 625

8 The inlet pressure must not fall below atmospheric pressure.

9 Low-salt or fully desalinated water to VdTÜV technical instruction leaflet / AGFW technical instruction leaflet TCN 1466 (VdTÜV) 5/15 (AGFW), edition 02.89

Overview of functions for variable speed version

Table 11: Overview of functions

Functions / firmware	PumpDrive 2	PumpDrive 2 Eco
Protective functions		
Thermal motor protection	✘	✘
Mains voltage monitoring	✘	✘
Phase failure, motor side	✘	✘
Short-circuit monitoring, motor side (phase to phase and phase to earth)	✘	✘
Dynamic overload protection by speed limitation (i^2t control)	✘	✘
Resonant frequency suppression	✘	✘
Broken wire detection (live zero)	✘	✘
Protection against dry running and hydraulic blockage (sensorless due to learning function)	✘	✘
Dry running protection (external control signal)	✘	✘
Operating point estimation and characteristic curve control	✘	✘
Open-loop control		
Open-loop control mode	✘	✘
Closed-loop control		
Closed-loop control mode via integrated PID controller	✘	✘
Pressure control / differential pressure control (Δp const)	✘	✘
Pressure control / differential pressure control with dynamic pressure compensation (Δp var)	✘	✘
Flow rate control	✘	✘
Sensorless differential pressure control (Δp const) in a single-pump configuration	✘	✘
Sensorless differential pressure control with dynamic pressure compensation (Δp var) in a single-pump configuration	✘	✘
Sensorless flow rate control	✘	✘
Level control	✘	✘
Temperature control	✘	✘
Alternative setpoint	✘	-
Operation and monitoring (display)		
Measured value display (pressure, head, speed, electric power, motor voltage, motor current, torque)	✘	✘
Fault history	✘	✘
Operating hours counter	✘	✘
Fault reporting via relay	✘	✘
Frequency inverter functions		
Programmable start ramps and stop ramps	✘	✘
Field-oriented control (vector control), V/f control	✘	✘
Configurable motor control method (asynchronous motor, KSB SuPremE)	✘	✘
Automatic motor adaptation (AMA)	✘	✘
Motor standstill heater	✘	✘
Manual-0-automatic mode	✘	✘
External OFF	✘	✘
External minimum speed	✘	✘
Sleep mode (stand-by mode)	✘	✘
Energy savings meter	✘	-
Pump functions		
Flow rate estimation	✘	✘
M12 module with PumpMeter bus connection	✘	✘
M12 module for dual-pump configuration	✘	✘
M12 module for multiple pump configuration with up to 6 pumps	✘	✘
Functional check run	✘	✘
Deragging	✘	✘
Integrated dual-pump configuration (1×100 % with redundant pump or 2×50 % without redundant pump)	✘	✘
Multiple pump configuration with up to 6 pumps	✘	✘
Waste water function: start-up at maximum speed	✘	-
Waste water function: rinsing function	✘	-
Operation		

1227.5/12-EN

Functions / firmware	PumpDrive 2	PumpDrive 2 Eco
Control panel	✗	✗[10)]
Commissioning wizard	✗	✗[11)]
Favourites list	✗	-
Service interface	✗	✗

Pressure limits and temperature limits

Test pressure limits and temperature limits

Table 12: Test pressure limits and temperature limits depending on the material

Material	Fluid temperature	Test pressure[12)]
	[°C]	[bar]
S	-30 to +350	≤ 25

In-service pressure limits and temperature limits

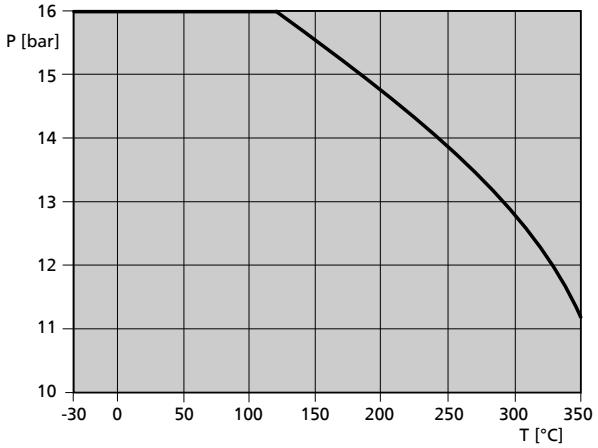

Fig. 1: Pressure/temperature correlation for flanges, material S, to EN 1092-2 and flanges drilled to ASME 125
Pressure/temperature correlation for flanges, material E, to EN 1092-1 and flanges drilled to ASME 150

10 Some functions can only be parameterised and/or displayed using the KSB ServiceTool (see operating manual).
11 Only available via KSB ServiceTool or app
12 The casing components are checked for leakage by means of internal pressure tests to AN 1897/75-03D00 with water.

Technical data

Etanorm SYT

Table 13: Technical data

Size	Shaft unit	Impeller				Speed limit	
		Outlet	Inlet	Nominal diameter		max.	min.
			Diameter	max.	min.		
		[mm]				[rpm]	
040-025-160	25	6,0	45,2	169	130	3600	800
040-025-200	25	6,0	45,2	209	160	3600	800
050-032-125.1	25	6,6	52,4	139	104	3600	800
050-032-160.1	25	5,7	52,7	170	136	4400	800
050-032-200.1	25	5,6	54,0	204	170	3800	800
050-032-160	25	8,5	60,6	174	136	3600	800
050-032-200	25	7,0	62,9	209	170	3700	800
050-032-250	25	7,5	62,6	261	209	3600	800
065-040-160	25	13,0	70,0	174	128	4400	800
065-040-200	25	9,4	69,4	209	165	3700	800
065-040-250	25	8,4	74,1	260	200	3600	800
065-040-315	35	7,5	75,3	326	260	2300	800
065-050-160	25	16,9	86,9	174	128	4400	800
065-050-200	25	13,8	83,1	219	170	3600	800
065-050-250	25	10,5	84,0	260	215	3600	800
065-050-315	35	10,0	87,0	323	265	2400	800
080-065-160	25	21,0	92,0	174	132	3900	800
080-065-200	25	17,0	99,7	219	175	3600	800
080-065-250	35	15,1	101,0	260	215	3600	800
080-065-315	35	13,7	108,2	320	260	1900	800
100-080-160	25	31,6	124,0	174	138	3600	800
100-080-200	35	24,5	115,0	219	180	3600	800
100-080-250	35	19,0	115,0	269	215	3600	800
100-080-315	35	18,7	115,6	334	269	1900	800
125-100-160	35	37,6	135,0	185	162	3600	800
125-100-200	35	32,5	142,0	219	179	3600	800
125-100-250	35	27,0	145,0	269	210	3600	800
125-100-315	35	23,0	142,0	334	270	1900	800
150-125-200	35	40,7	159,0	224	182	3600	800
150-125-250	35	37,0	162,4	269	218	2000	800
150-125-315	55	30,9	162,0	334	270	1900	800
150-125-400	55	25,9	162,4	419	330	1800	800
200-150-315	55	39,7	191,5	334	264	1800	800
200-150-400	55	33,0	191,4	419	330	1800	800

1227.5/12-EN

Selection charts

Etanorm SYT (fixed speed version), n = 2900 rpm

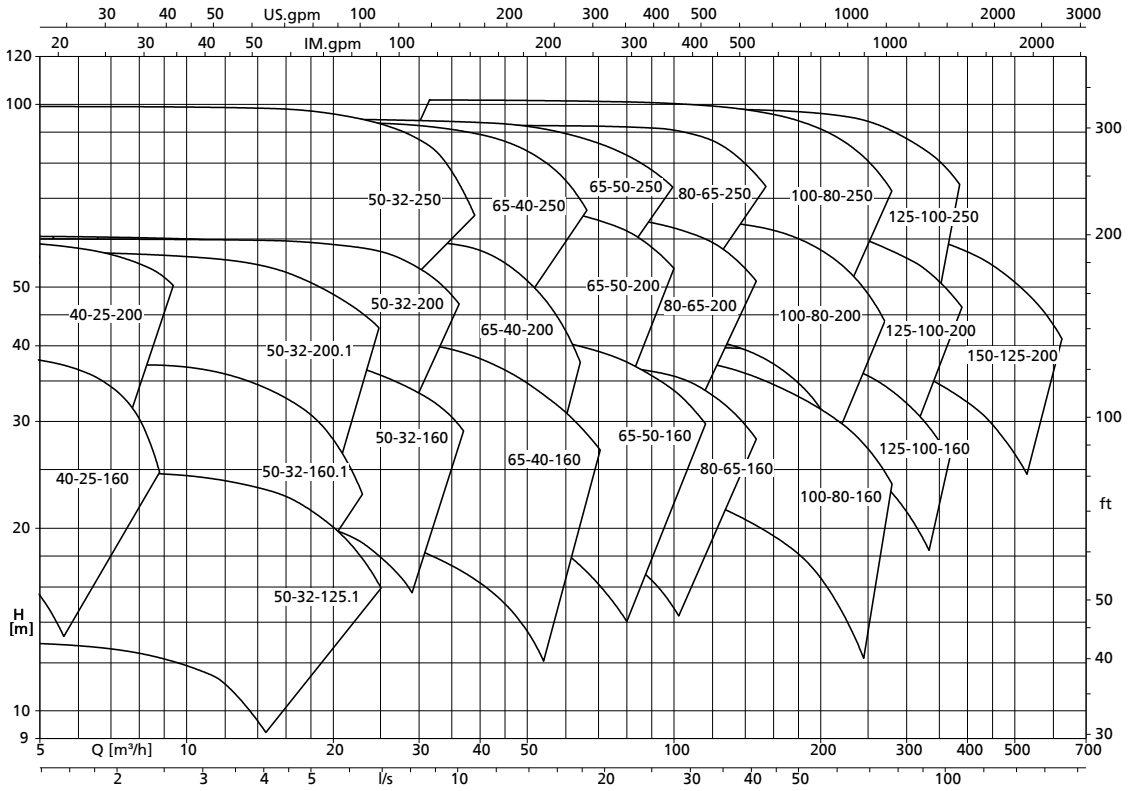

Etanorm SYT (fixed speed version), n = 1450 rpm

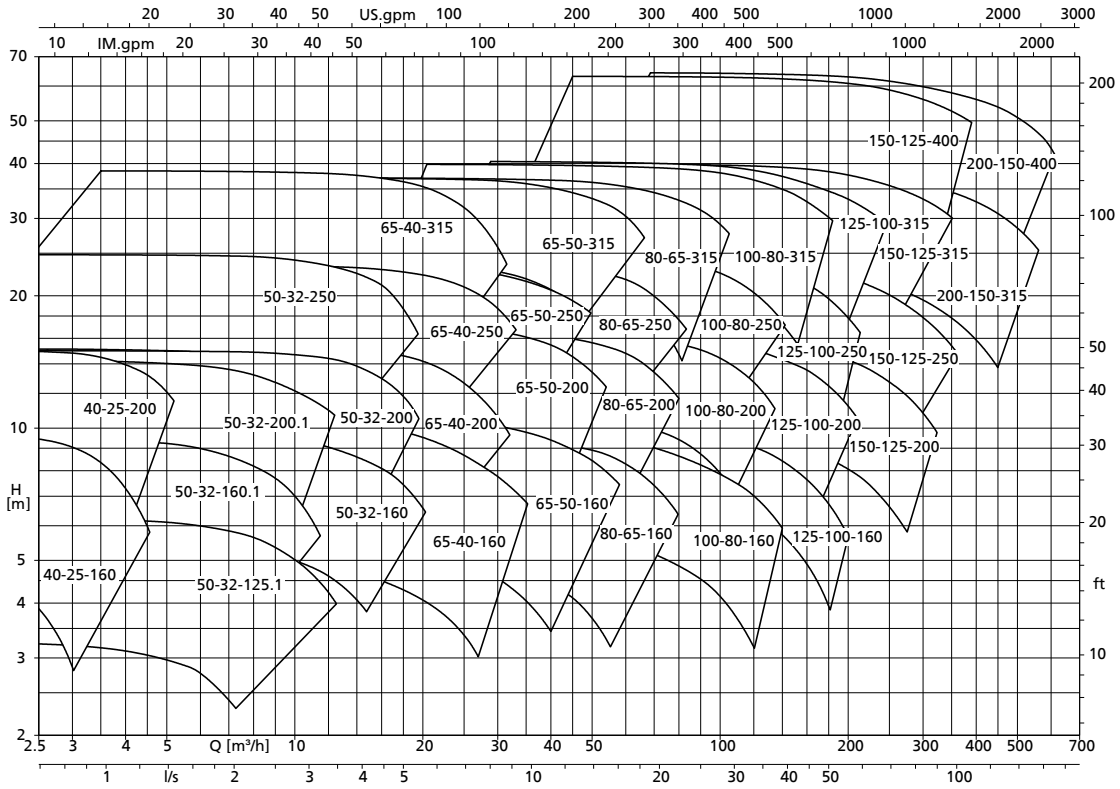

Etanorm SYT (fixed speed version), n = 960 rpm

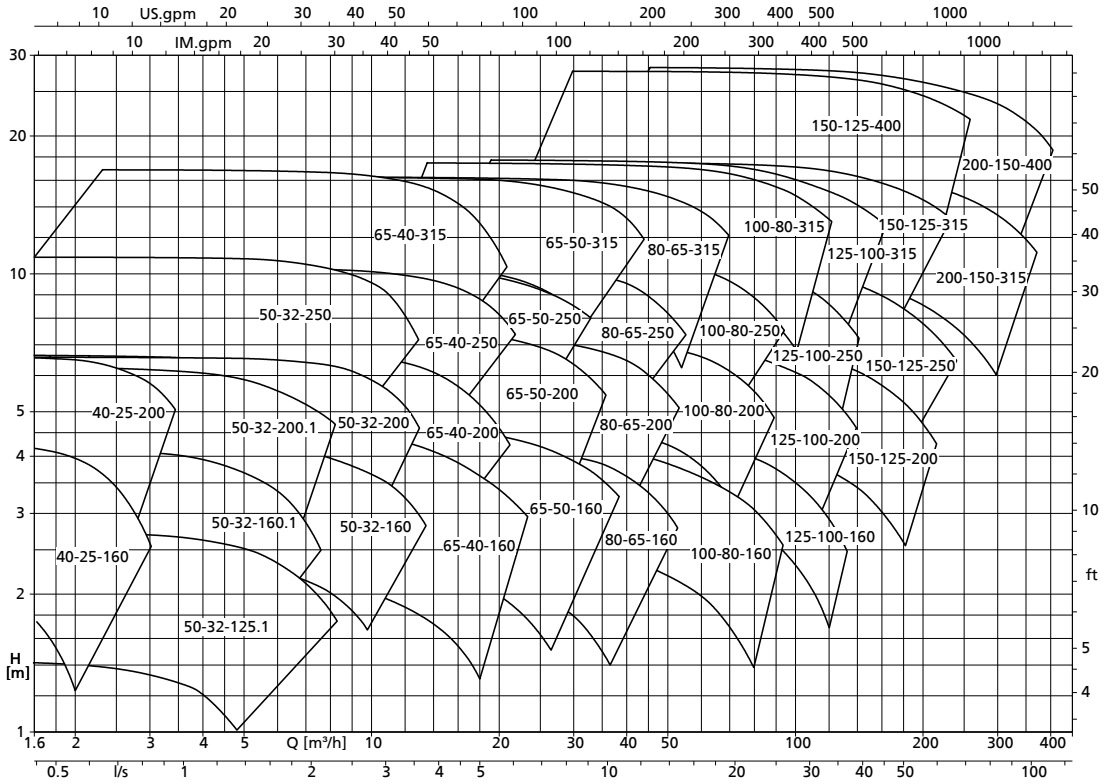

Etanorm SYT (fixed speed version), n = 3500 rpm

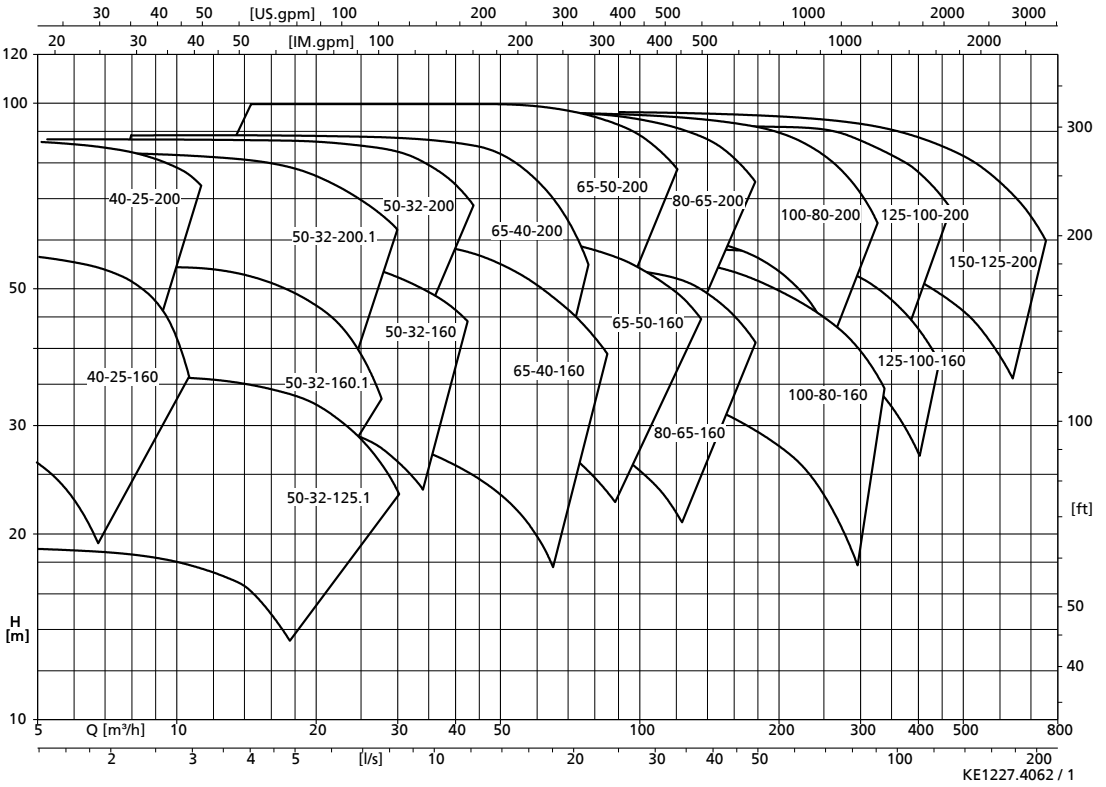

1227.5/12-EN

Etanorm SYT (fixed speed version), n = 1750 rpm

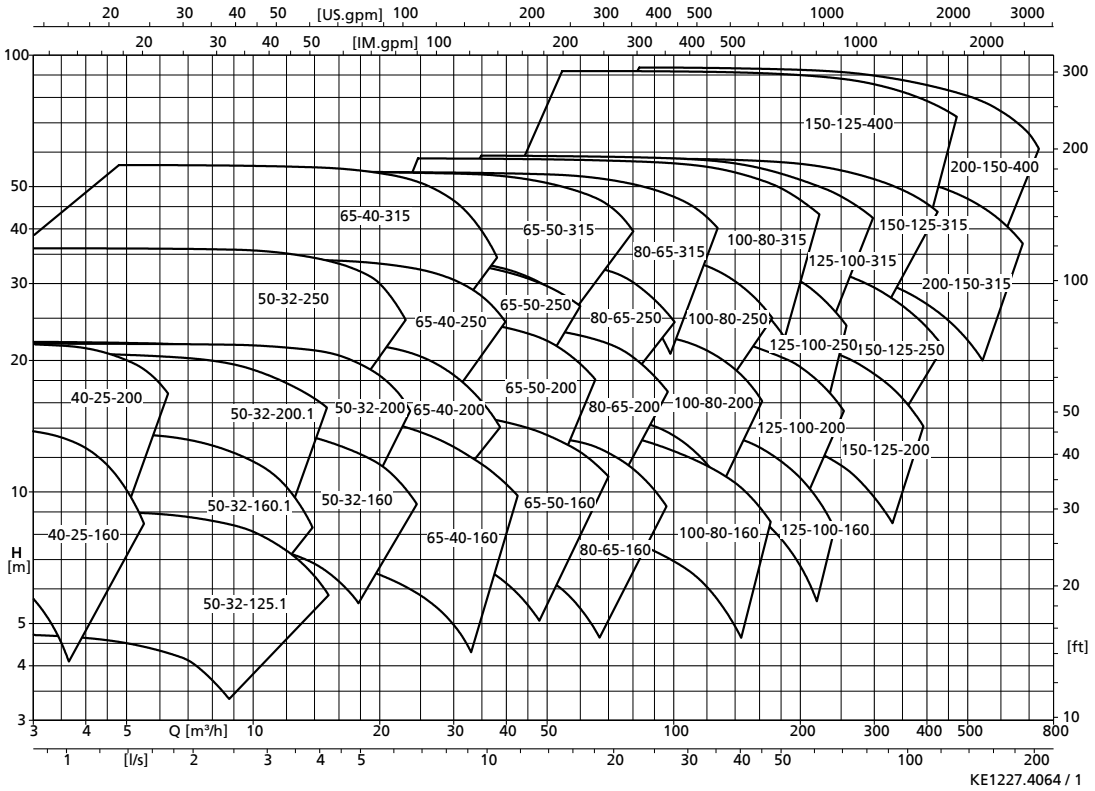

Etanorm SYT (fixed speed version), n = 1160 rpm

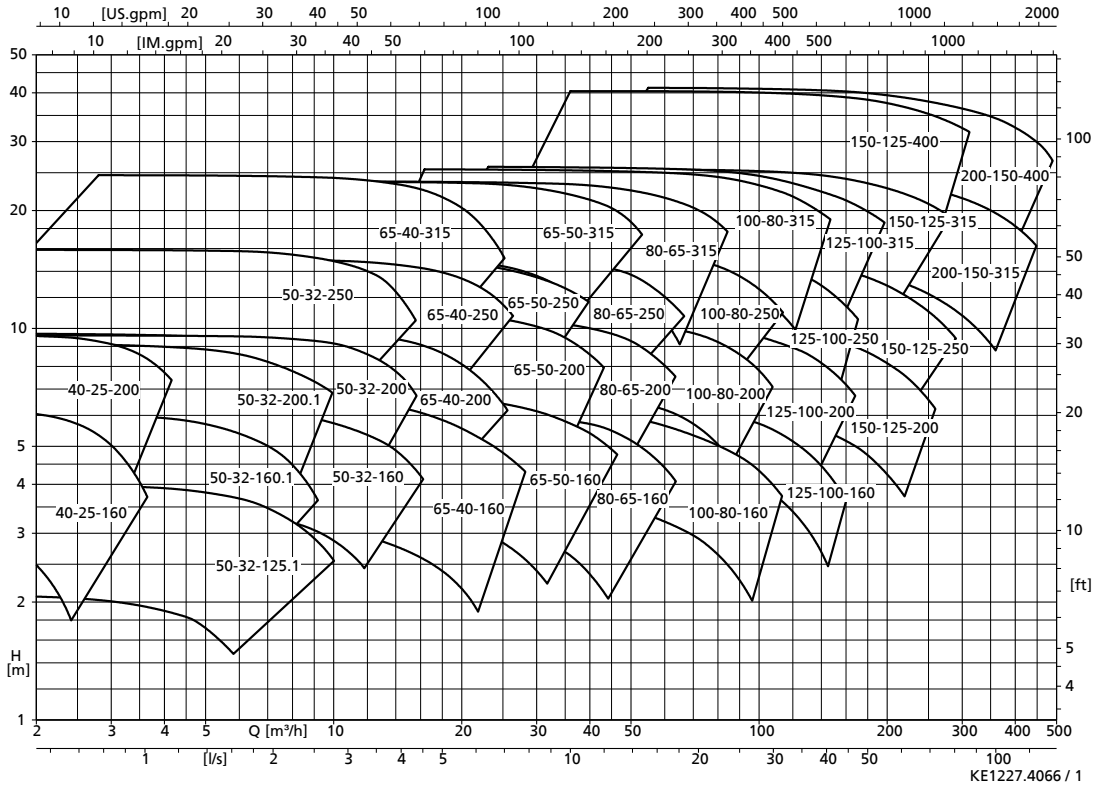

1227.5/12-EN

Dimensions and connections

Pump (Fig. 0 bare-shaft pump)

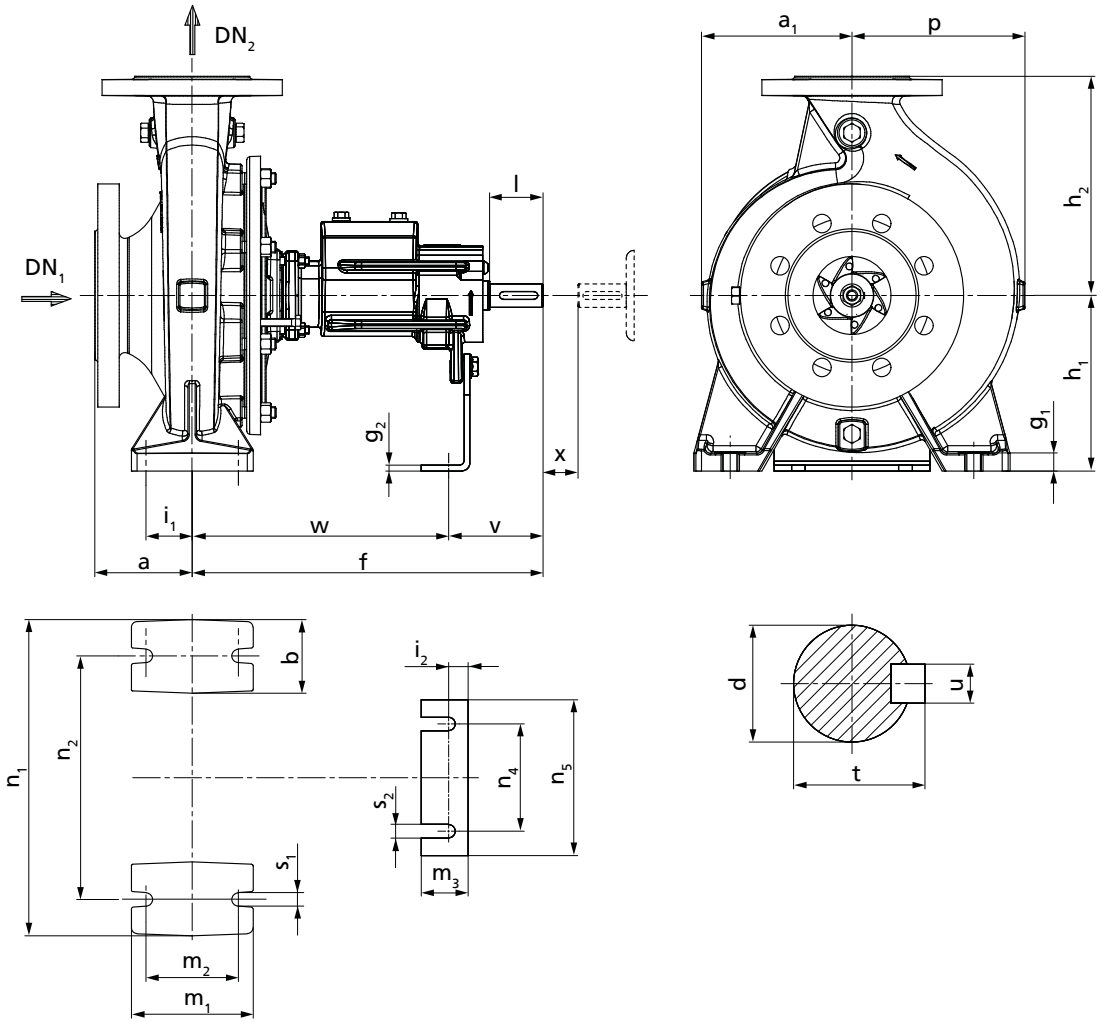

Fig. 2: Dimensions of Etanorm SYT pump (Fig. 0)

Table 14: Dimensions of Etanorm SYT pump (Fig. 0)

Size	Bearing bracket	DN_1[13]	DN_2[13]	a[13]	a_1	b[13]	d[13]	f[13]	g_1	g_2	h_1[13]	h_2[13]	i_1	i_2	l[13]	m_1[13]	m_2	m_3[13]	n_1[13]	n_2[13]	n_4	n_5	p	s_1[13]	s_2[13]	t	u	v	w[13]	x[13]
		[mm]																												
040-025-160	WS_25_LS	40	25	80	118	50	24	360	15	4	132	160	35	23	50	100	70	48	240	190	110	160	118	14	14	27	8	100	260	100
040-025-200	WS_25_LS	40	25	80	142	50	24	360	15	4	160	180	35	23	50	100	70	48	240	190	110	160	142	14	14	27	8	100	260	100
050-032-125.1	WS_25_LS	50	32	80	116	50	24	360	15	4	112	140	35	23	50	100	70	48	190	140	110	160	116	14	14	27	8	100	260	100
050-032-160.1	WS_25_LS	50	32	80	116	50	24	360	15	4	132	160	35	23	50	100	70	48	240	190	110	160	121	14	14	27	8	100	260	100
050-032-200.1	WS_25_LS	50	32	80	142	50	24	360	18	4	160	180	35	23	50	100	70	48	240	190	110	160	142	14	14	27	8	100	260	100
050-032-160	WS_25_LS	50	32	80	118	50	24	360	15	4	132	160	35	23	50	100	70	48	240	190	110	160	128	14	14	27	8	100	260	100
050-032-200	WS_25_LS	50	32	80	142	50	24	360	18	4	160	180	35	23	50	100	70	48	240	190	110	160	143	14	14	27	8	100	260	100
050-032-250	WS_25_LS	50	32	100	169	65	24	360	18	6	180	225	47,5	25	50	125	95	48	320	250	110	160	178	14	14	27	8	100	260	100
065-040-160	WS_25_LS	65	40	80	119	50	24	360	15	4	132	160	35	23	50	100	70	48	240	190	110	160	134	14	14	27	8	100	260	100
065-040-200	WS_25_LS	65	40	100	142	50	24	360	18	4	160	180	35	23	50	100	70	48	265	212	110	160	155	14	14	27	8	100	260	100
065-040-250	WS_25_LS	65	40	100	169	65	24	360	18	6	180	225	47,5	25	50	125	95	48	320	250	110	160	179	14	14	27	8	100	260	100
065-040-315	WS_35_LS	65	40	125	207	65	32	470	18	6	225	250	47,5	24	80	125	95	48	345	280	110	160	207	14	14	35	10	130	340	100
065-050-160	WS_25_LS	65	50	100	128	50	24	360	18	4	160	180	35	23	50	100	70	48	265	212	110	160	149	14	14	27	8	100	260	100
065-050-200	WS_25_LS	65	50	100	144	50	24	360	18	4	160	200	35	23	50	100	70	48	265	212	110	160	163	14	14	27	8	100	260	100
065-050-250	WS_25_LS	65	50	100	170	65	24	360	18	6	180	225	47,5	25	50	125	95	48	320	250	110	160	186	14	14	27	8	100	260	100
065-050-315	WS_35_LS	65	50	125	207	65	32	470	18	6	225	280	47,5	24	80	125	95	48	345	280	110	160	215	14	14	35	10	130	340	100
080-065-160	WS_25_LS	80	65	100	132	65	24	360	18	4	160	200	47,5	23	50	125	95	48	280	212	110	160	160	14	14	27	8	100	260	100
080-065-200	WS_25_LS	80	65	100	155	65	24	360	18	6	180	225	47,5	25	50	125	95	48	320	250	110	160	178	14	14	27	8	100	260	140
080-065-250	WS_35_LS	80	65	100	179	80	32	470	20	6	200	250	60	24	80	160	120	48	360	280	110	160	199	19	14	35	10	130	340	140
080-065-315	WS_35_LS	80	65	125	209	80	32	470	20	6	225	280	60	24	80	160	120	48	400	315	110	160	229	19	14	35	10	130	340	140
100-080-160	WS_25_LS	100	80	125	138	65	24	360	18	6	180	225	47,5	25	50	125	95	48	320	250	110	160	174	14	14	27	8	100	260	140
100-080-200	WS_35_LS	100	80	125	159	65	32	470	18	4	180	250	47,5	22	80	125	95	48	345	280	110	160	188	14	14	35	10	130	340	140
100-080-250	WS_35_LS	100	80	125	183	80	32	470	18	6	200	280	60	24	80	160	120	48	400	315	110	160	209	19	14	35	10	130	340	140
100-080-315	WS_35_LS	100	80	125	218	80	32	470	20	6	250	315	60	24	80	160	120	48	400	315	110	160	242	19	14	35	10	130	340	140
125-100-160	WS_35_LS	125	100	125	178	80	32	470	18	6	200	280	60	24	80	160	120	48	360	280	110	160	225	19	14	35	10	130	340	140
125-100-200	WS_35_LS	125	100	125	173	80	32	470	18	6	200	280	60	24	80	160	120	48	360	280	110	160	212	19	14	35	10	130	340	140
125-100-250	WS_35_LS	125	100	140	188	80	32	470	18	6	225	280	60	24	80	160	120	48	400	315	110	160	219	19	14	35	10	130	340	140
125-100-315	WS_35_LS	125	100	140	225	80	32	470	18	6	250	315	60	24	80	160	120	48	400	315	110	160	255	19	14	35	10	130	340	140
150-125-200	WS_35_LS	150	125	140	189	80	32	470	20	6	250	315	60	24	80	160	120	48	400	315	110	160	242	19	14	35	10	130	340	140
150-125-250	WS_35_LS	150	125	140	226	80	32	470	20	6	250	355	60	24	80	160	120	48	400	315	110	160	275	19	14	35	10	130	340	140
150-125-315	WS_55_LS	150	125	140	243	100	42	530	20	6	280	355	75	25	110	200	150	48	500	400	110	160	280	24	14	45	12	160	370	140
150-125-400	WS_55_LS	150	125	140	277	100	42	530	20	6	315	400	75	25	110	200	150	48	500	400	110	160	309	24	14	45	12	160	370	140
200-150-315	WS_55_LS	200	150	160	255	100	42	530	20	6	280	400	75	25	110	200	150	48	550	450	110	160	304	24	14	45	12	160	370	140
200-150-400	WS_55_LS	200	150	160	289	100	42	530	20	6	315	450	75	25	110	200	150	48	550	450	110	160	331	24	14	45	12	160	370	140

13 Dimensions to EN 733

PumpDrive 2

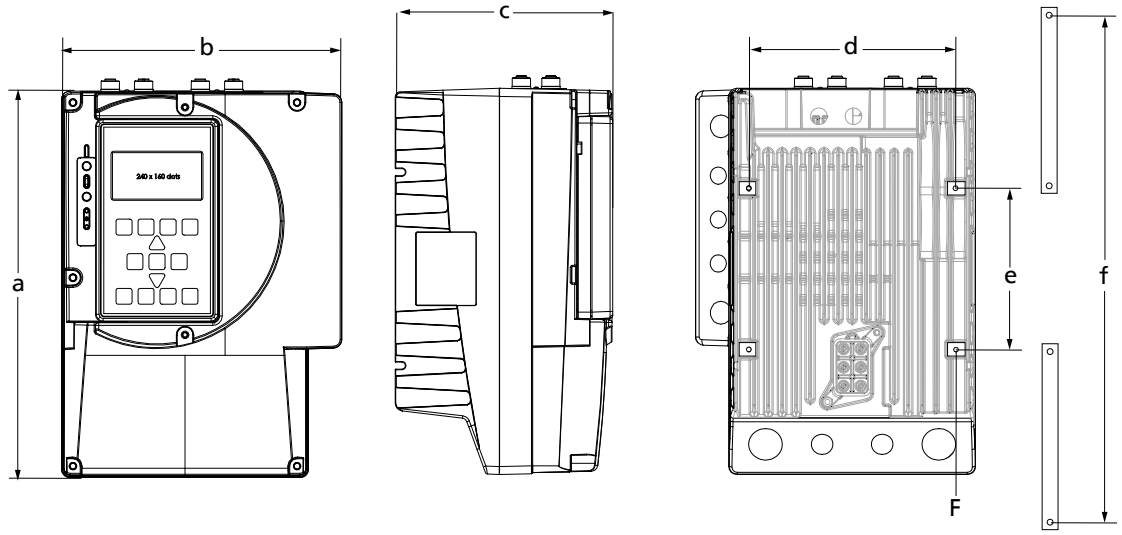

Fig. 3: PumpDrive 2 dimensions

Table 15: Dimensions and weights

Housing type	P_N	Motor-mounted model					Wall-mounted/ cabinet-mounted model[14]					Fastening screws/bolts	[kg][15]
		a	b	c	d	e	a	b	c	d	f	F	
	[kW]	[mm]										-	
A	0,37	260	190	166	140	141	343	190	166	140	333	M4 × 10	5
A	0,55	260	190	166	140	141	343	190	166	140	333	M4 × 10	5
A	0,75	260	190	166	140	141	343	190	166	140	333	M4 × 10	5
A	1,10	260	190	166	140	141	343	190	166	140	333	M4 × 10	5
A	1,50	260	190	166	140	141	343	190	166	140	333	M4 × 10	5
B	2,20	290	211	166	155	121	328	211	166	155	318	M4 × 10	6,5
B	3,00	290	211	166	155	121	328	211	166	155	318	M4 × 10	6,5
B	4,00	290	211	166	155	121	328	211	166	155	318	M4 × 10	6,5
C	5,50	330	280	210	219	205	401	280	210	219	387	M6 × 12	12,6
C	7,50	330	280	210	219	205	401	280	210	219	387	M6 × 12	12,6
C	11,00	330	280	210	219	205	401	280	210	219	387	M6 × 12	12,6
D	15,00	460	350	290	280	309	582	350	290	280	565	M8 × 14	27,6
D	18,50	460	350	290	280	309	582	350	290	280	565	M8 × 14	36
D	22,00	460	350	290	280	309	582	350	290	280	565	M8 × 14	36
D	30,00	460	350	290	280	309	582	350	290	280	565	M8 × 14	36
E	37,00	700	455	340	375	475	819	455	340	375	800	M8 × 14	57,6
E	45,00	700	455	340	375	475	819	455	340	375	800	M8 × 14	60
E	55,00	700	455	340	375	475	819	455	340	375	800	M8 × 14	60

1227.5/12-EN

14 The dimensions provided refer to the frequency inverter including the wall-mounting brackets.
15 Without motor adapter

Auxiliary connections for double mechanical seal

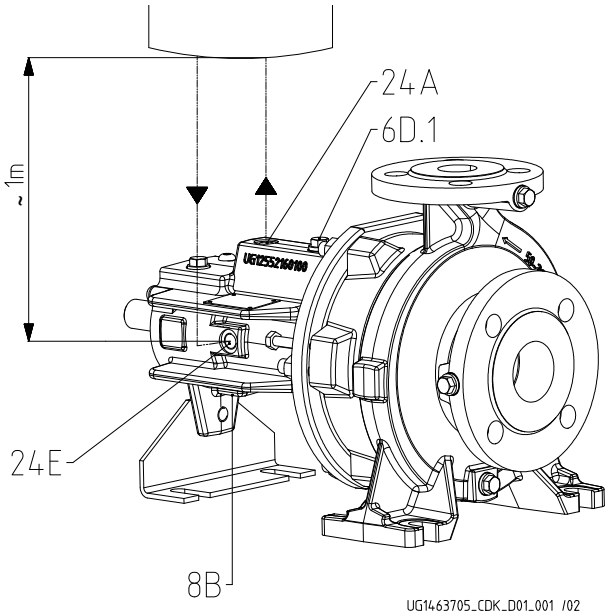

Fig. 4: Connections for double mechanical seal

Table 16: Overview

Connection	Description
6D.1	Fluid priming and venting
8B	Leakage drain
24A	Quench fluid outlet
24E	Quench fluid inlet

Auxiliary connections for double mechanical seal and monitoring equipment

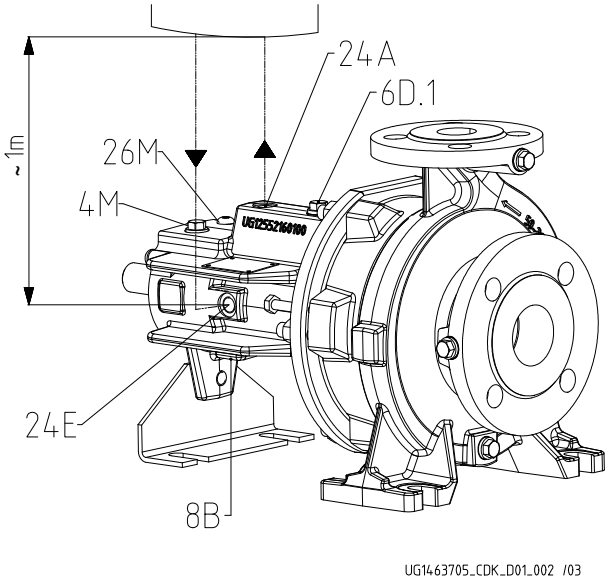

Fig. 5: Connections for double mechanical seal and monitoring equipment

Table 17: Overview

Connection	Description
4M	Temperature measurement
6D.1	Fluid priming and venting
8B	Leakage drain
24A	Quench liquid outlet
24E	Quench liquid inlet
26M	Shock pulse measurement

Auxiliary connections for single mechanical seal and monitoring equipment

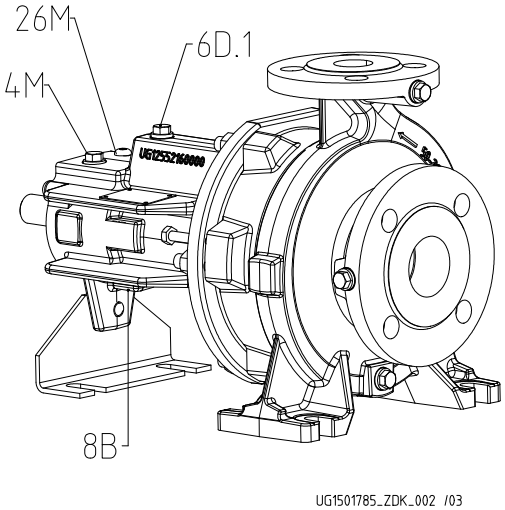

Fig. 6: Connections for single mechanical seal and monitoring equipment

Table 18: Overview

Connection	Description
4M	Temperature measurement
6D.1	Fluid priming and venting
8B	Leakage drain
26M	Shock pulse measurement

Connections

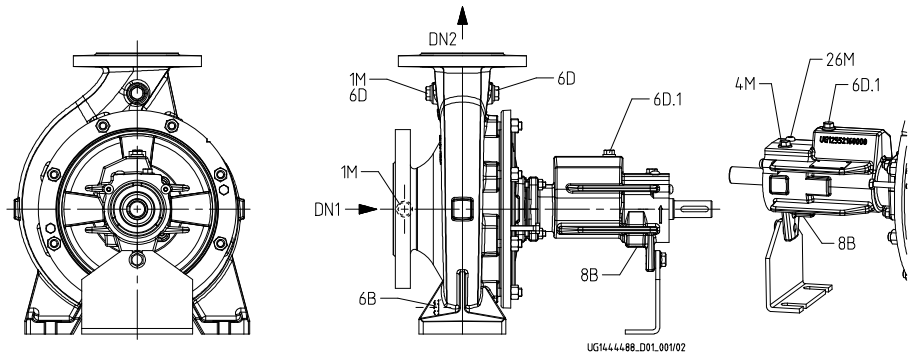

Fig. 7: Connection of Etanorm SYT with single mechanical seal

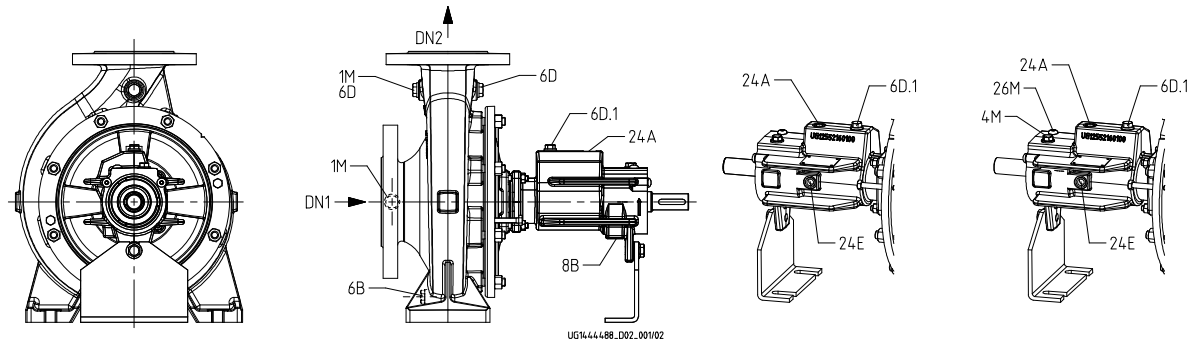

Fig. 8: Connection of Etanorm SYT with double mechanical seal

Table 19: Connections

Connection * = optional	Design	Configuration	Position
1M	Pressure gauge	Drilled and closed or with pressure sensor	DN_2
1M*	Pressure gauge	Drilled and closed or with pressure sensor	DN_1
4M	Temperature measurement	Drilled and closed or with temperature sensor	-
6B	Fluid drain	Drilled and closed	-
6D	Fluid priming and venting	Drilled and closed	DN_2, suction side
6D*	Fluid priming and venting	Drilled and closed	DN_2, drive end
6D.1	Fluid priming and venting	Drilled and closed	-
8B	Leakage drain	Drilled	-
24A	Quench fluid outlet	Drilled and closed or with quench piping	-
24E	Quench fluid inlet	Drilled and closed or with quench piping	-
26M	Shock pulse measurement	Drilled and closed or with vibration sensor	-

Table 20: Etanorm SYT connections

Etanorm SYT	Bearing bracket	Material S		
		Connections at the volute casing	Connections at the bearing bracket	
		1M / 6D / 6B	26M	6D.1 / 8B / 24A / 24E / 4M
040-025-160	WS_25_LS	G 1/4	M8	G 1/4
040-025-200	WS_25_LS	G 1/4	M8	G 1/4
050-032-125.1	WS_25_LS	G 1/4	M8	G 1/4
050-032-160.1	WS_25_LS	G 1/4	M8	G 1/4
050-032-200.1	WS_25_LS	G 1/4	M8	G 1/4
050-032-160	WS_25_LS	G 1/4	M8	G 1/4
050-032-200	WS_25_LS	G 1/4	M8	G 1/4
050-032-250	WS_25_LS	G 1/4	M8	G 1/4
065-040-160	WS_25_LS	G 1/4	M8	G 1/4
065-040-200	WS_25_LS	G 1/4	M8	G 1/4
065-040-250	WS_25_LS	G 1/4	M8	G 1/4
065-040-315	WS_35_LS	G 1/4	M8	G 1/4
065-050-160	WS_25_LS	G 1/4	M8	G 1/4
065-050-200	WS_25_LS	G 1/4	M8	G 1/4
065-050-250	WS_25_LS	G 1/4	M8	G 1/4
065-050-315	WS_35_LS	G 1/4	M8	G 1/4
080-065-160	WS_25_LS	G 3/8	M8	G 1/4
080-065-200	WS_25_LS	G 3/8	M8	G 1/4
080-065-250	WS_35_LS	G 3/8	M8	G 1/4
080-065-315	WS_35_LS	G 3/8	M8	G 1/4
100-080-160	WS_25_LS	G 3/8	M8	G 1/4
100-080-200	WS_35_LS	G 3/8	M8	G 1/4
100-080-250	WS_35_LS	G 3/8	M8	G 1/4
100-080-315	WS_35_LS	G 3/8	M8	G 1/4
125-100-160	WS_35_LS	G 1/2	M8	G 1/4
125-100-200	WS_35_LS	G 1/2	M8	G 1/4
125-100-250	WS_35_LS	G 1/2	M8	G 1/4
125-100-315	WS_35_LS	G 1/2	M8	G 1/4
150-125-200	WS_35_LS	G 1/2	M8	G 1/4
150-125-250	WS_35_LS	G 1/2	M8	G 1/4
150-125-315	WS_55_LS	G 1/2	M8	G 1/4
150-125-400	WS_55_LS	G 1/2	M8	G 1/4
200-150-200	WS_55_LS	G 1/2	M8	G 1/4
200-150-400	WS_55_LS	G 1/2	M8	G 1/4

Flange design

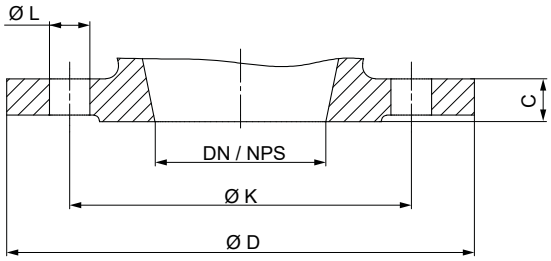

Fig. 9: Flange dimensions of Etanorm SYT

Table 21: Flange dimensions of Etanorm SYT

DN / NPS	Standard					
	EN 1092-2			ASME B 16.1		
	PN 16			Class 125		
	Ø K	Ø D	Number and Ø of holes (Ø L)	Ø K	Ø D	Number and Ø of holes (Ø L)
	[mm]					
25 / NPS 1	85	115	4 × ∅14	79,2	115	4 × ∅15,7
32 / NPS 1 1/4	100	140	4 × ∅19	88,9	140	4 × ∅15,7
40 / NPS 1 1/2	110	150	4 × ∅19	98,6	150	4 × ∅15,7
50 / NPS 2	125	165	4 × ∅19	120,7	165	4 × ∅19,1
65 / NPS 2 1/2	145	185	4 × ∅19	139,7	185	4 × ∅19,1
80 / NPS 3[16)]	160	200 / 229[17)]	8 × ∅19	152,4	200 / 229[17)]	4 × ∅19,1
100 / NPS 4	180	230	8 × ∅19	190,5	230	8 × ∅19,1
125 / NPS 5	210	255	8 × ∅19	215,9	255	8 × ∅22,4
150 / NPS 6	240	285	8 × ∅23	241,3	285	8 × ∅22,4
200 / NPS 8	295	345	12 × ∅23	298,5	345	8 × ∅22,4

Table 22: Table (NPS for DN 80 flange drilled to ASME)

Etanorm SYT	Bearing bracket	Materials SG / SC	
		DN 1	DN 2
		ASME 125	ASME 125
080-065-160	25	NPS 4	NPS 2 1/2
080-065-200	25	NPS 4	NPS 2 1/2
080-065-250	35	NPS 4	NPS 2 1/2
080-065-315	35	NPS 4	NPS 2 1/2

Table 23: Flange design by material

Material	Standard	Nominal diameter	Pressure class
S	EN 1092-2	DN 25 - DN 200	PN 16
S	Drilled to ASME B16.1[18)]	DN 25 - DN 200	Class 125

Scope of supply

Depending on the model, the following items are included in the scope of supply:

- Pump
- Baseplate
- Coupling
- Coupling guard
- Drive
- Quench pot with pipework (optional)
- Special accessories as required

1227.5/12-EN

16 DN 80 machined like DN 100, drilled to ASME

17 Flange DN 80 on suction side; applies to sizes 080-065-160, 080-065-200, 080-065-250, 080-065-315. Also see the table on Equivalents.

18 DN 80 machined like DN 100

General assembly drawings

Version with bearing bracket WS_25_LS

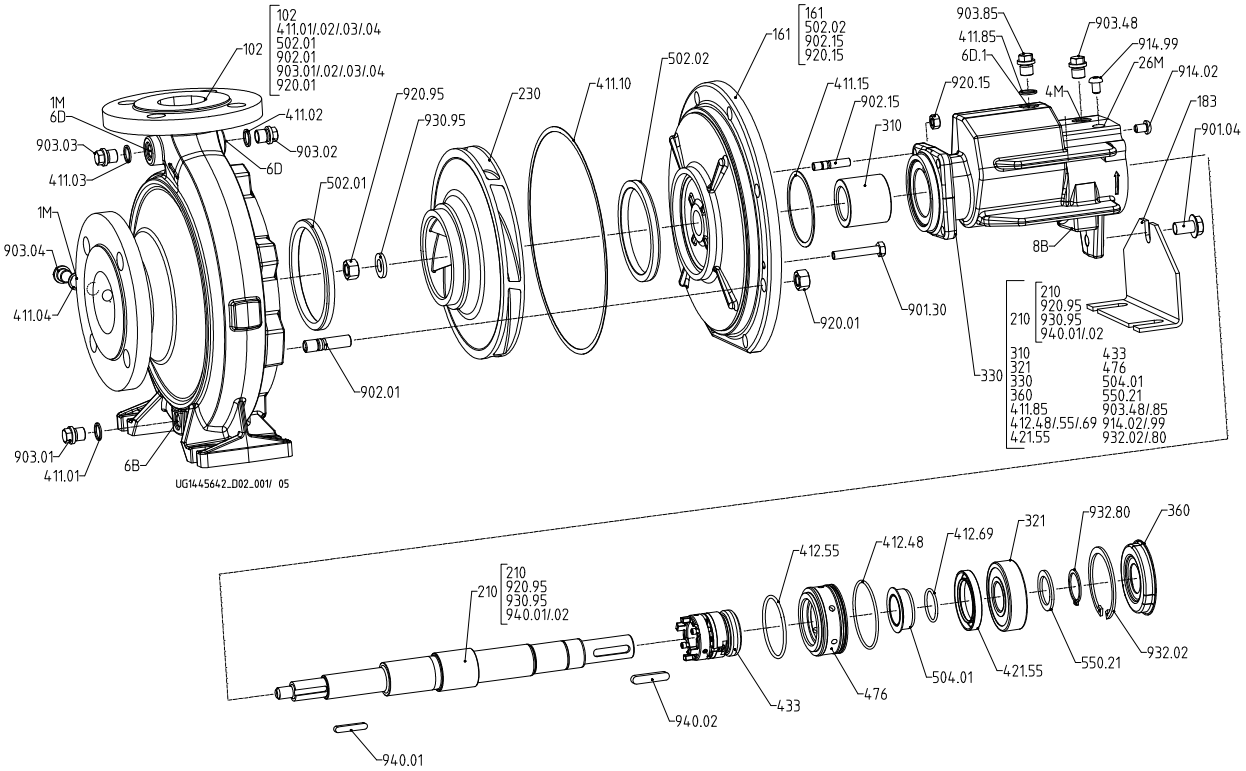

Fig. 10: Exploded view of an Etanorm SYT, bearing bracket WS_25_LS

Table 24: List of components

Part No.	Description	Part No.	Description
102	Volute casing	476	Mating ring carrier
161	Casing cover	502.01/.02[19]	Casing wear ring
183	Support foot	504.01	Spacer ring
210	Shaft	550.21	Disc
230	Impeller	901.04/.30	Hexagon head bolt
310	Plain bearing	902.01/.15	Stud
321	Radial ball bearing	903.01/.02/.03/.04/.48/.85	Screw plug
330	Bearing bracket	914.02/.99	Hexagon socket head cap screw
360	Bearing cover	920.01/.15/.95	Nut
411.01/.02/.03/.04/.10/.15/.85	Joint ring	930.95	Safety device
412.48/.55/.69	O-ring	932.02/.80	Circlip
421.55	Lip seal	940.01/.02	Key
433	Mechanical seal		

19 502.02 not fitted on sizes 040-025-160, 050-032-125.1, 050-032-160.1, 050-032-160

Version with bearing bracket WS_25_LS with double mechanical seal

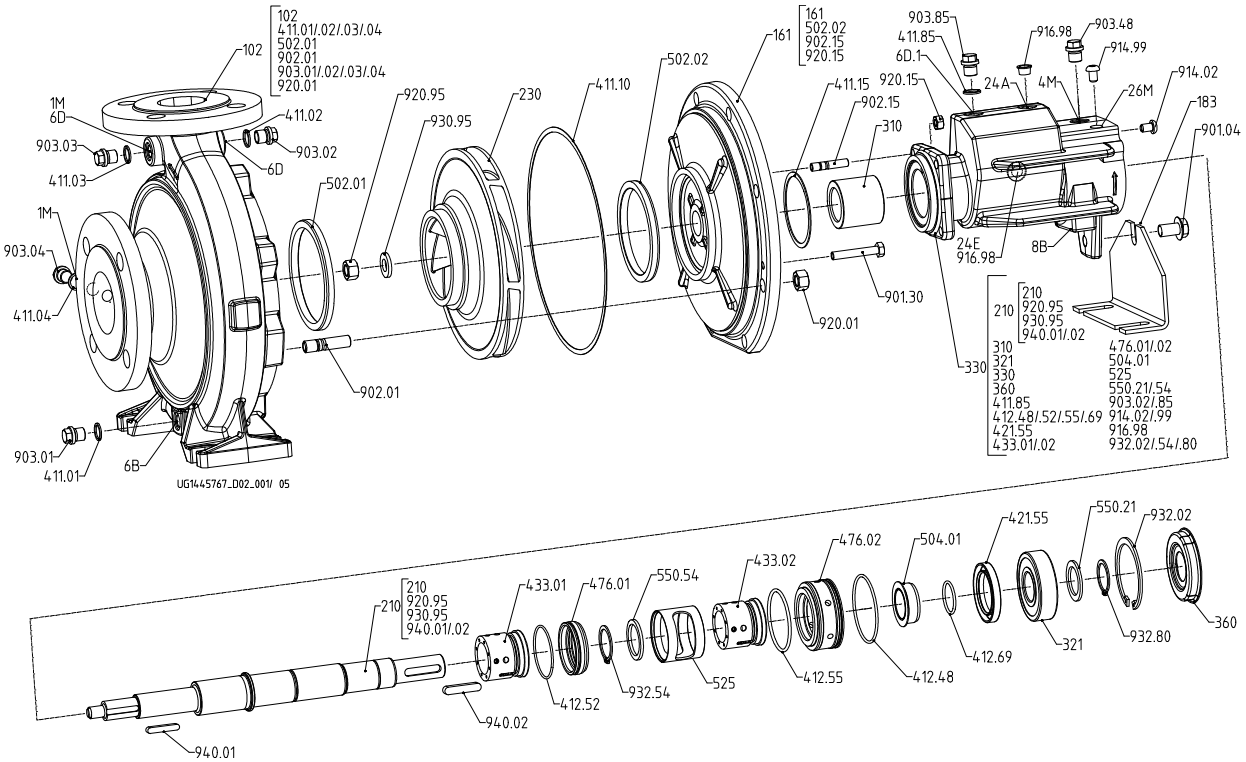

Fig. 11: Exploded view of an Etanorm SYT; bearing bracket WS_25_LS with double mechanical seal

Table 25: List of components

Part No.	Description	Part No.	Description
102	Volute casing	502.01/.02[20]	Casing wear ring
161	Casing cover	504.01	Spacer ring
183	Support foot	525	Spacer sleeve
210	Shaft	550.21/.54	Disc
230	Impeller	901.04/.30	Hexagon head bolt
310	Plain bearing	902.01/.15	Stud
321	Radial ball bearing	903.01/.02/.03/.04/.48/.85	Screw plug
330	Bearing bracket	914.02/.99	Hexagon socket head cap screw
360	Bearing cover	916.98	Plug
411.01/.02/.03/.04/.10/.15/.85	Joint ring	920.01/.15/.95	Nut
412.48/.52/.55/.69	O-ring	930.95	Safety device
421.55	Lip seal	932.02/.54/.80	Circlip
433.01/.02	Mechanical seal	940.01/.02	Key
476.01/.02	Mating ring carrier		

1227.5/12-EN

20 502.02 not fitted on sizes 040-025-160, 050-032-125.1, 050-032-160.1, 050-032-160

Version with bearing brackets WS_25_LS / WS_55_LS with SiC plain bearing

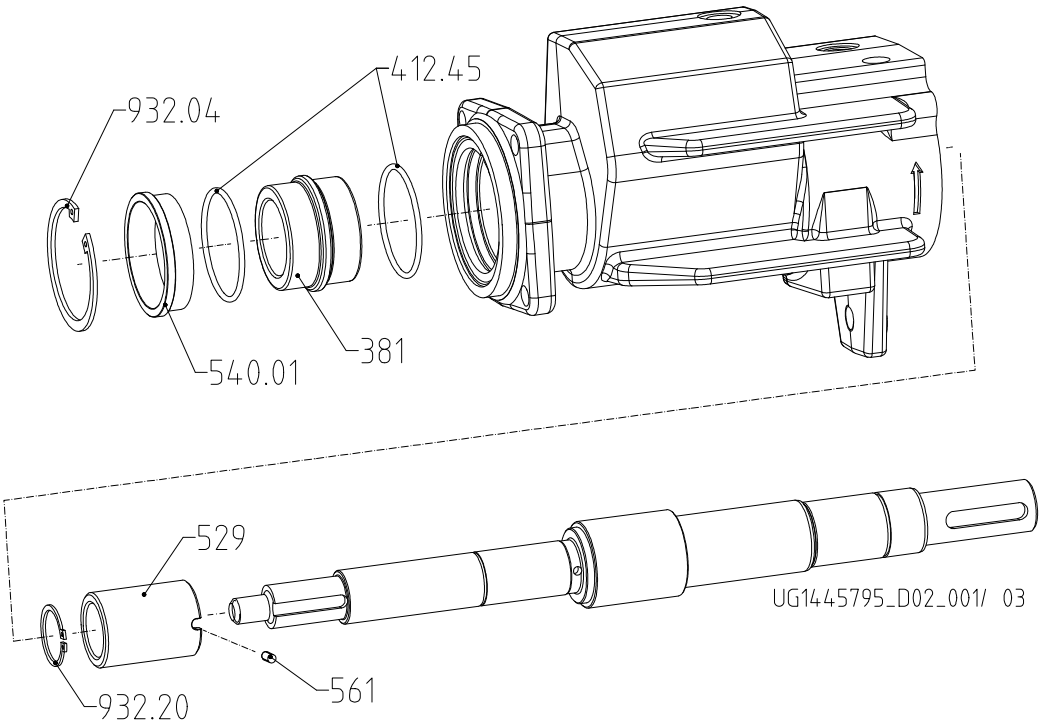

Fig. 12: Exploded view of Etanorm SYT, bearing brackets WS_25_LS / WS_55_LS with SiC plain bearing

Table 26: List of components

Part No.	Description	Part No.	Description
381	Bearing cartridge	540.01	Bush
412.45	O-ring	561	Grooved pin
529	Bearing sleeve	932.04/.20	Circlip

Version with bearing brackets WS_35_LS / WS_55_LS

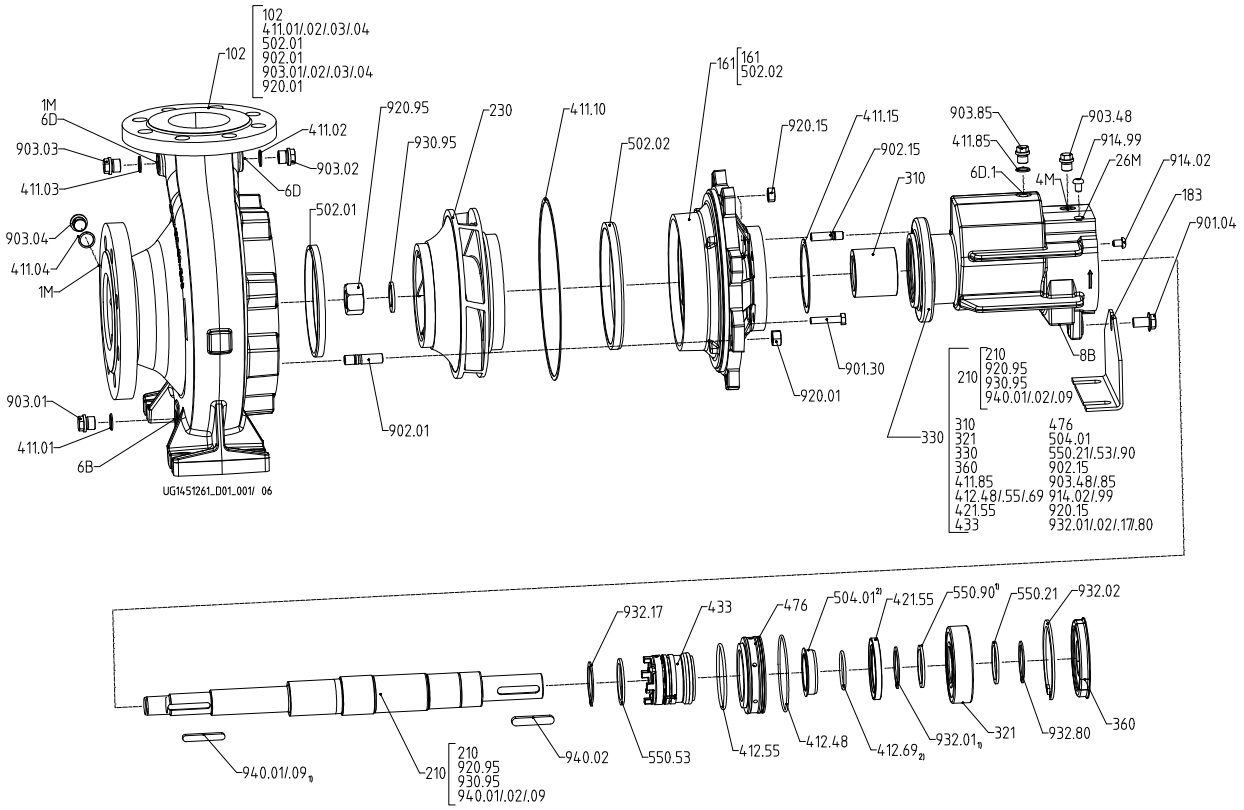

Fig. 13: Exploded view of an Etanorm SYT, bearing brackets WS_35_LS / WS_55_LS
[1] For WS_55 only
[2] For WS_35 only

Table 27: List of components

Part No.	Description	Part No.	Description
102	Volute casing	476	Mating ring carrier
161	Casing cover	502.01/.02	Casing wear ring
183	Support foot	504.01[21]	Spacer ring
210	Shaft	550.21/.53/.90[22]	Disc
230	Impeller	901.04/.30	Hexagon head bolt
310	Plain bearing	902.01/.15	Stud
321	Radial ball bearing	903.01/.02/.03/.04/.48/.85	Screw plug
330	Bearing bracket	914.02/.99	Hexagon socket head cap screw
360	Bearing cover	920.01/.15/.95	Nut
411.01/.02/.03/.04/.10/.15/.85	Joint ring	930.95	Safety device
412.48/.55/.69	O-ring	932.01[23]/.02/.17/.80	Circlip
421.55	Lip seal	940.01/.02/.09[24]	Key
433	Mechanical seal		

1227.5/12-EN

21 504.01 for bearing bracket WS_35_LS only
22 550.90 for bearing bracket WS_55_LS only
23 932.01 for bearing bracket WS_55_LS only
24 940.09 for bearing bracket WS_55_LS only

Version with bearing brackets WS_35_LS / WS_55_LS with double mechanical seal

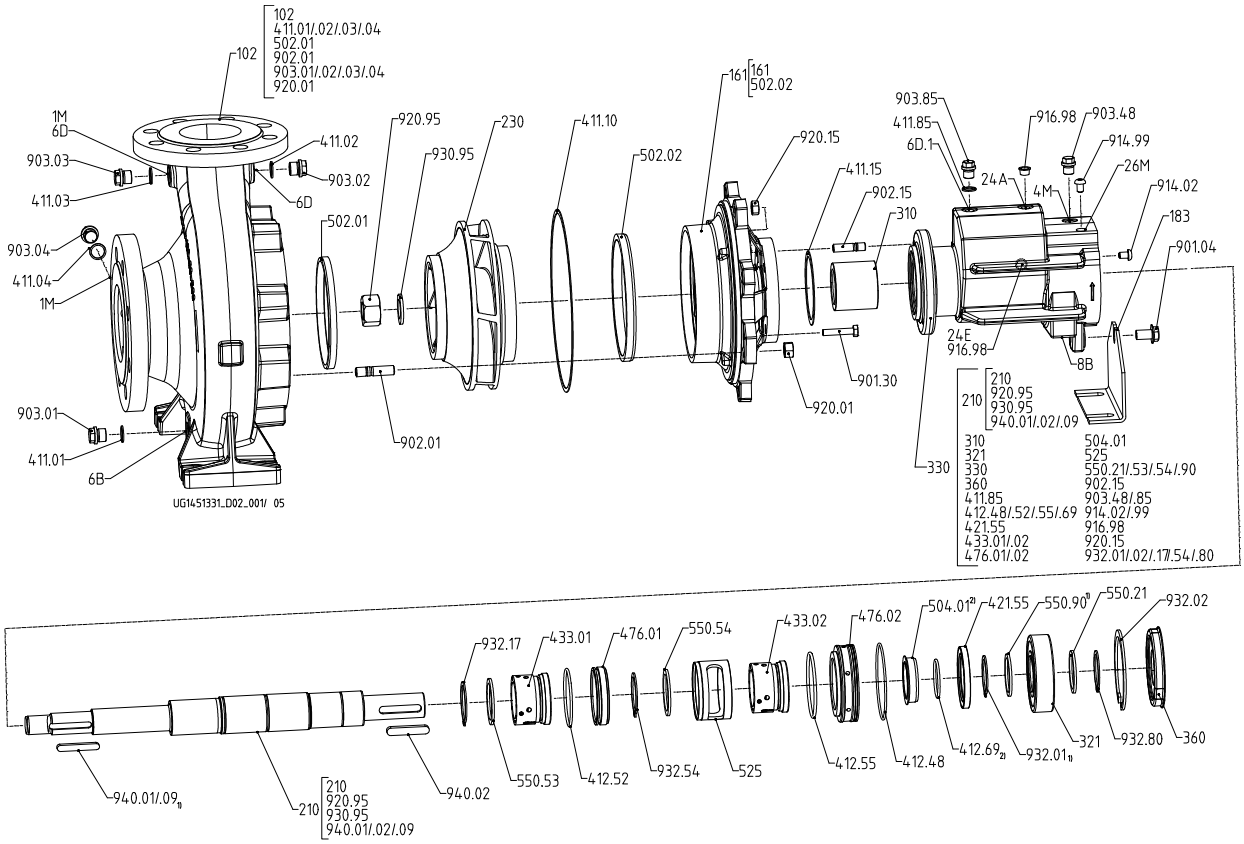

Fig. 14: Exploded view of an Etanorm SYT, bearing brackets WS_35_LS / WS_55_LS with double mechanical seal
[1] For WS_55 only
[2] For WS_35 only

Table 28: List of components

Part No.	Description	Part No.	Description
102	Volute casing	502.01/.02	Casing wear ring
161	Casing cover	504.01[25]	Spacer ring
183	Support foot	525	Spacer sleeve
210	Shaft	550.21/.53/.54/.90[26]	Disc
230	Impeller	901.04/.30	Hexagon head bolt
310	Plain bearing	902.01/.15	Stud
321	Radial ball bearing	903.01/.02/.03/.04/.48/.85	Screw plug
330	Bearing bracket	914.02/.99	Hexagon socket head cap screw
360	Bearing cover	916.98	Plug
411.01/.02/.03/.04/.10/.15/.85	Joint ring	920.01/.15/.95	Nut
412.48/.52/.55/.69[27]	O-ring	930.95	Safety device
421.55	Lip seal	932.01[28]/.02/.17/.54/.80	Circlip
433.01/.02	Mechanical seal	940.01/.02/.09[29]	Key
476.01/.02	Mating ring carrier		

25 504.01 for bearing bracket WS_35_LS only
26 550.90 for bearing bracket WS_55_LS only
27 412.69 for bearing bracket WS_35_LS only
28 932.01 for bearing bracket WS_55_LS only
29 940.09 for bearing bracket WS_55_LS only

Version with bearing bracket WS_35_LS with SiC plain bearing

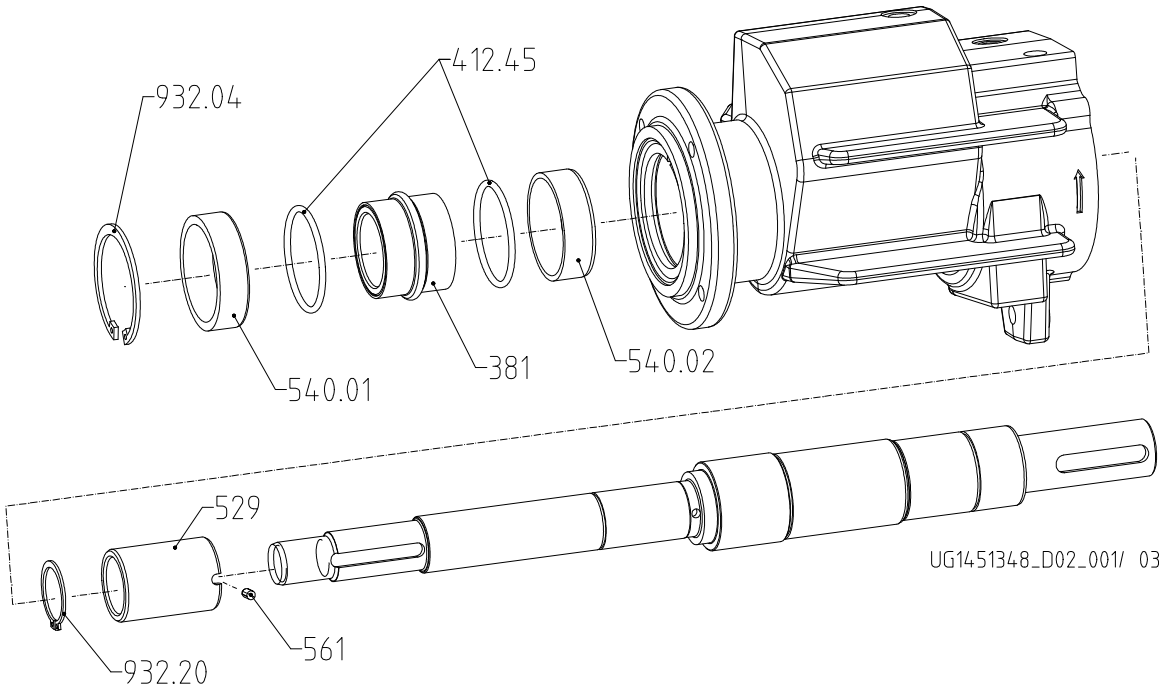

Fig. 15: Exploded view of Etanorm SYT, bearing bracket WS_35_LS with SiC plain bearing

Table 29: List of components

Part No.	Description	Part No.	Description
381	Bearing cartridge	540.01/.02	Bush
412.45	O-ring	561	Grooved pin
529	Bearing sleeve	932.04/.20	Circlip

Glossary

Back pull-out design

The complete back pull-out unit can be pulled out without having to remove the pump casing from the piping.

IE2

Efficiency class to IEC 60034-30: 2 = High Efficiency (IE = International Efficiency)

IE3

Efficiency class to IEC 60034-30: 3 = Premium Efficiency (IE = International Efficiency)

IE4

Efficiency class to IEC TS 60034-30-2:2016 = Super Premium Efficiency (IE = International Efficiency)

IE5

Efficiency class for rotating electrical machinery to IEC TS 60034-30-2:2016 = Ultra Premium Efficiency (IE = International Efficiency)

Mech. seal

Mechanical seal

2024-03-20

1227.5/12-EN

LENNTECH
WATER TREATMENT SOLUTIONS
info@lenntech.com Tel. +31-152-610-900
www.lenntech.com Fax. +31-152-616-289

KSB