Vertical Low-pressure Pump

Etanorm V

Fixed Speed / Variable Speed
50 Hz / 60 Hz

Type Series Booklet

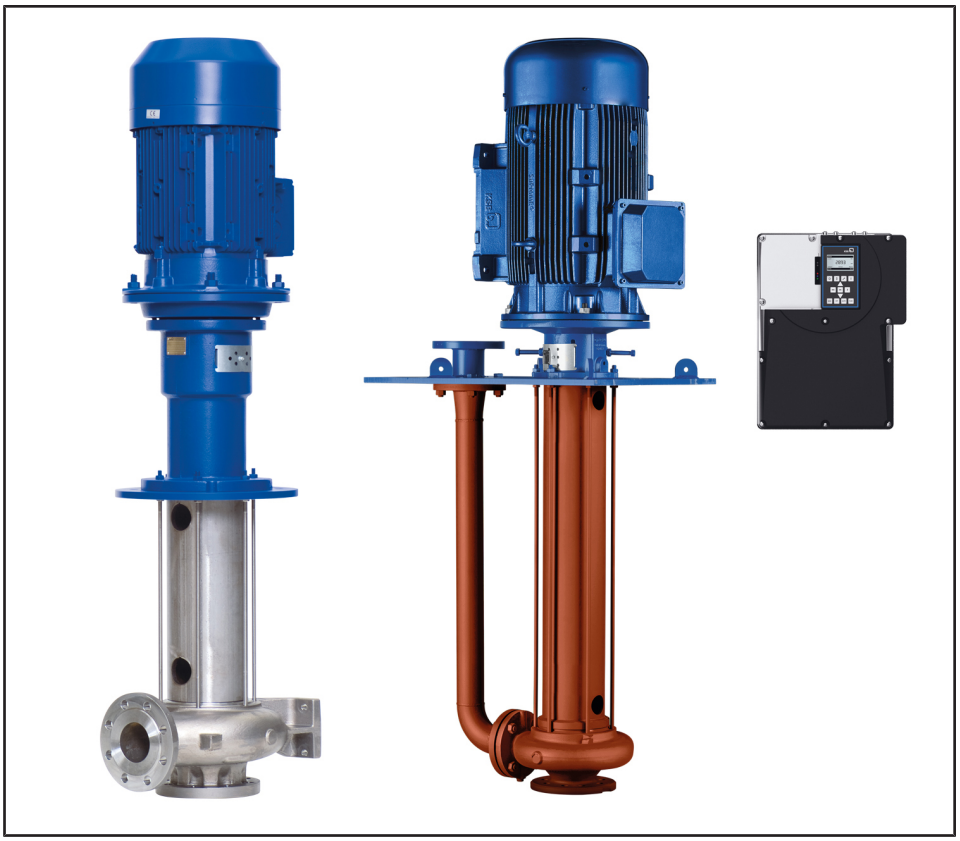

Legal information/Copyright

Type Series Booklet Etanorm V

All rights reserved. The contents provided herein must neither be distributed, copied, reproduced, edited or processed for any other purpose, nor otherwise transmitted, published or made available to a third party without the manufacturer's express written consent.

Subject to technical modification without prior notice.

© KSB SE & Co. KGaA, Frankenthal 2023-05-23

Contents

Vertical Low-pressure Pumps **4**
Centrifugal Pumps 4
Etanorm V 4
Main applications 4
Fluids handled 4
Related documents 4
Operating data 4
Design details 5
Designation 6
Materials 8
Coating and preservation 9
Product benefits 9
Product information 9
Product information as per Regulation No. 1907/2006 (REACH) 9
Acceptance tests and warranty 9
Overview of product features / selection tables 9
Overview of variants 9
Overview of fluids handled 10
Overview of material variants 10
Bearings 11
Overview of functions for variable speed version 13
Pressure limits and temperature limits 14
Technical data 15
Pump 15
Immersion depths 16
Selection charts 23
Etanorm V (fixed speed version), n = 2900 rpm 23
Etanorm V (fixed speed version), n = 1450 rpm 23
Etanorm V (fixed speed version), n = 3500 rpm 24
Etanorm V (fixed speed version), n = 1750 rpm 24
Characteristic curves 25
Related documents 25
Dimensions 26
Pump dimensions 26
Motor dimensions 28
Dimensions of immersion depths 29
Dimensions: distance from the floor 30
Flange variant 31
Sets of spare parts 32
Scope of supply 33
General assembly drawings 34
General assembly drawing with list of components for D design 34
General assembly drawing with list of components for W design 37

Vertical Low-pressure Pumps

Centrifugal Pumps

Etanorm V

The product illustrated as an example may include options incurring a surcharge.

Main applications

- Pumping neutral degreasing solutions and phosphating solutions
- Lubricating oil supply and sealing oil supply for turbines, generators, large compressors, large gear units

Fluids handled

- Water
- Wash water with degreasing agents
- Lubricating oils and sealing oils
- Phosphating solutions and electrophoretic coating paint (e.g. cataphoretic dip paint)[1)]
- Hydraulic oils

Related documents

Table 1: Information/documents

Document	Reference number
Characteristic curves booklet (50 Hz) Fixed speed version	1311.45
Characteristic curves booklet (60 Hz) Fixed speed version	1311.46
Type series booklet KSB SuPremE	4075.53
Type series booklet PumpDrive 2 / PumpDrive 2 Eco	4074.5

Operating data

Table 2: Operating properties

Characteristic		Value	
		50 Hz	60 Hz
Flow rate	Q [m³/h]	≤ 625	≤ 675
Head	H [m]	≤ 100	≤ 100
Fluid temperature Design D	T [°C]	≤ +70	≤ +70
Fluid temperature Design W		≤ +95	≤ +95

1228.5/08-EN

1 Only for design D

Design details

Design

- Volute casing pump
- For vertical installation in closed tanks under atmospheric pressure
- Single-stage
- Ratings to EN 733
- Rigid connection between pump and motor

Pump casing

- Radially split volute casing

Stainless steel variant / grey cast iron variant for design with shaft unit WS 55:

- Volute casing with integrally cast pump feet
- Replaceable casing wear rings

Contact guard

Design D:

- Cover plates at bearing lantern to EN 294

Design W:

- Cover plates at drive lantern to EN 294

Drive (fixed speed version)

Standard design:

- KSB/Siemens surface-cooled IEC frame three-phase squirrel-cage motor
- Efficiency class IE2 (size 71/80) / IE3 (from size 90) to IEC 60034-30
- Rated voltage (50 Hz) 230 V / 400 V ≤ 2.20 kW
- Rated voltage (50 Hz) 400 V / 690 V ≥ 3.00 kW
- Rated voltage (60 Hz) - / 460 V ≤ 2.20 kW
- Rated voltage (60 Hz) 460 V / - ≥ 3.00 kW
- Type of construction IM V1
- Enclosure IP55
- Duty type: continuous duty S1
- Thermal class F with temperature sensor, 1 PTC thermistor (size 80/90) / 3 PTC thermistors (from size 100)

Drive (variable speed version)

KSB SuPremE motor:

- Surface-cooled KSB SuPremE motor, IEC-compatible, magnetless synchronous reluctance motor[2)] (PumpDrive required)
- Efficiency class IE4 / IE5 to IEC TS 60034-30-2:2016
- Mounting points to EN 50347:2001
- Envelope dimensions to DIN VDE 42673-4:2011-07
- Type of construction IM V1
- Enclosure IP55
- Duty type: continuous duty S1
- Thermal class F with temperature sensor, 3 PTC thermistors
- Shaft centreline height 71 to 225 mm
- Rated power 0.55 kW to 45 kW
- Rated speed 1500 rpm or 3000 rpm
- Frequency 50 Hz / 60 Hz (PumpDrive input)
- Voltage 380 V to 480 V (PumpDrive input)

KSB SuPremE C1/D1:

- With terminal box for connecting to PumpDrive 2 or PumpDrive R for mounting on walls and in control cabinets

KSB SuPremE C2/D2:

- Equipped for being fitted with a motor-mounted PumpDrive 2

PumpDrive 2 / PumpDrive 2 Eco:

- Self-cooling frequency inverter of modular design for the continuously variable speed control of asynchronous motors and synchronous reluctance motors by means of analog standard signals, a field bus or the control panel
- Identical design of frequency inverter for the mounting types motor mounting (only for fluid temperature ≤ 110 °C), wall mounting and cabinet mounting
- Mains voltage 3~ 380 V AC -10 % to 480 V AC +10 %
- Mains frequency 50 Hz to 60 Hz ± 2 %

PumpDrive R:

- Self-cooling frequency inverter of modular design for the continuously variable speed control of asynchronous motors and synchronous reluctance motors, such as KSB SupremE motors or permanent magnet synchronous motors, by means of analog standard signals, a field bus or the control panel
- Identical design of frequency inverter for the mounting types wall mounting and cabinet mounting
- Mains voltage 3~ 380 V AC -10 % to 480 V AC +10 %
- Extended mains voltage range (on request)
- Mains frequency 50 Hz to 60 Hz ± 2 %
- Extended power range with a nominal power of 110 kW (standard) or 1400 kW (on request)

For operating an Etanorm V on a frequency inverter which has not been configured via the KSB selection tool consultation with KSB is required.

For operating an Etanorm V on a frequency inverter at immersion depths > 1000 mm selection requires consultation with KSB.

Shaft seal

- Controlled gap

Impeller type

- Closed radial impeller with multiply curved vanes

Bearings

Design D:

- Deep groove ball bearings greased for life in a bearing lantern above the cover plate, pump shaft cantilevered below the cover plate

Design W:

- Product-lubricated SiC/SiC plain bearing (pump end), rigid coupling between pump shaft and motor shaft

2 Motor sizes 0.55 kW / 0.75 kW with 1500 rpm are designed with permanent magnets.

Designation

Table 3: Designation example

Position																																			
1	2	3	4	5	6	7	8	9	10	11	12	13	14	15	16	17	18	19	20	21	22	23	24	25	26	27	28	29	30	31	32	33	34	35	36
E	T	N	V	0	5	0	-	0	3	2	-	1	2	5	1	G	G	S	D	D	B	0	4	2	2	0	0	7	5	2	B	P	D	2	E
See name plate and data sheet																										See data sheet									

Table 4: Designation key

Position	Code	Description	
1-4	Pump type		
	ETNV	Etanorm V	
5-16	Size, e.g.		
	050	Nominal suction nozzle diameter [mm]	
	032	Nominal discharge nozzle diameter [mm]	
	1251	Nominal impeller diameter [mm]	
17	Pump casing material		
	C	Stainless steel	1.4408 / A743CF8M
	G	Cast iron	EN-GJL-250/A48 CL 35B
18	Impeller material		
	B	Bronze	CC480K-GS / B30 C90700
	C	Stainless steel	1.4408 / A743CF8M
	G	Cast iron	EN-GJL-250/A48 CL 35B
19	Design		
	S	Standard	
	X	Non-standard (BT3D, BT3)	
20	Shaft design		
	D	Dry	
	V	Vacuum	
	W	Wet	
21	Scope of supply		
	A	Pump only (Fig. 0 bare-shaft pump)	
	C	Pump, coupling	
	D	Pump set	
22	Cover plate		
	B	Cover plate	
	H	Bracket	
23-25	Immersion depth [mm]		
	037	375	
	039	398	
	042	425	
	044	448	
	050	504	
	052	529	
	053	535	
	075	750	
	100	1000	
	125	1250	
	150	1500	
	170	1750	
	200	2000	
26	Shaft unit		
	2	Shaft unit 25	
	3	Shaft unit 35	
	5	Shaft unit 55	
27-30	Motor rating P_N [kW]		
	0007	0,75	
	...	...	
	1320	132,00	
	----	Without motor	

1228.5/08-EN

Position	Code	Description
31	Number of motor poles	
	-	Without motor
32	Product generation	
	B	Etanorm V 2013
33-36	Variant	
	-	Fixed speed version (without PumpDrive)
	PD2	Variable speed version, with PumpDrive 2
	PD2E	Variable speed version, with PumpDrive 2 Eco

Materials

Table 5: Symbols key

Symbol	Description
✗	Standard
o	Optional
-	Version not available / not feasible

Table 6: Overview of available materials

Part No. (⇨ Page 34)	Description	Material	Material variant			
			GG	GB	GC	CC
68-3.01	Cover plate	Steel	✗	✗	✗	-
		Stainless steel 1.4408 / A743 Gr. CF8 M	o	o	o	✗
102	Volute casing	Grey cast iron EN-GJL-250 / A 48 Cl. 35B	✗	✗	✗	-
		Stainless steel 1.4408 / A743 Gr. CF8 M	-	-	-	✗
146	Intermediate lantern	Grey cast iron EN-GJL-250 / A 48 Cl. 35B	✗	✗	✗	✗
161	Casing cover	Grey cast iron EN-GJL-250 / A 48 Cl. 35B	✗	✗	✗	-
		Stainless steel 1.4408 / A743 Gr. CF8 M	-	-	-	✗
210	Shaft	Tempered steel C45+N	✗	✗	✗	-
		Duplex steel 1.4462 / UNS S31803	o	o	o	✗
230	Impeller	Grey cast iron EN-GJL-250 / A 48 Cl. 35B	✗	-	-	-
		Stainless steel 1.4408 / A743 Gr. CF8 M	-	-	✗	✗
		Bronze CC480K-GS / B30 C90700	-	✗	-	-
340	Bearing lantern	Grey cast iron EN-GJL-250 / A 48 Cl. 35B	✗	✗	✗	✗
341	Drive lantern	Grey cast iron EN-GJL-250 / A 48 Cl. 35B	✗	✗	✗	✗
350	Bearing housing	Grey cast iron EN-GJL-250 / A 48 Cl. 35B	✗	✗	✗	✗
381	Plain bearing	SiC / SiC	✗	✗	✗	✗
502.01	Casing wear ring, suction side	Grey cast iron EN-GJL-250 / CI	✗	✗	✗	-
		Stainless steel (CrNiMoST)	o	-	o	✗
		Bronze CC495K-GS	-	o	-	-
		Without	-	-	-	✗
502.02	Casing wear ring, discharge side	Grey cast iron EN-GJL-250 / CI	✗	✗	✗	-
		Stainless steel (CrNiMoST)	o	-	o	✗
		Bronze CC495K-GS	-	o	-	-
		Without	-	-	-	✗
711	Discharge pipe	Steel	✗	✗	✗	-
		Stainless steel 1.4404	-	-	-	✗
712	Support column	Steel	✗	✗	✗	-
		Stainless steel 1.4404	-	-	-	✗
732	Holder	Steel	✗	✗	✗	o
		Stainless steel 1.4571	-	-	-	✗
902.01	Stud	Steel 8.8	✗	✗	✗	-
		A4 / AISI 316	o	o	o	✗
903	Screw plug	Steel 8.8	✗	✗	✗	-
		A4 / AISI 316	o	o	o	✗
905	Tie bolt	Steel 8.8	✗	✗	✗	-
		A4 / AISI 316	o	o	o	✗
920.95	Impeller nut	Steel 8.8	✗	✗	-	-
		A4 / AISI 316	o	o	✗	✗
940	Key	Steel 8.8	✗	✗	-	-
		A4 / AISI 316	o	o	✗	✗

1228.5/08-EN

Coating and preservation

- Coating and preservation to KSB standard

Product benefits

- Improved efficiency and NPSHreq by experimentally verified hydraulic design of impellers (vanes)
- Operating costs reduced by trimming the nominal impeller diameter to match the specified duty point
- Cover plate serves as tank cover and for mounting the pump.
- Robust deep groove ball bearings greased for life
- Vertical design with small footprint

Design D:

- Variable immersion depth up to 535 mm
- Ingress of fluid handled into the deep groove ball bearing prevented by V-ring and/or lip seal
- No need for additional bearing in the fluid handled thanks to cantilever design

Design W:

- Variable immersion depth up to 2000 mm
- Wear-resistant, product-lubricated SiC/SiC plain bearing
- Resistant to short flooding of the cover plate thanks to design without rolling element bearing above the cover plate

Product information

Product information as per Regulation No. 1907/2006 (REACH)

For information as per European chemicals regulation (EC) No. 1907/2006 (REACH) see https://www.ksb.com/en-global/company/corporate-responsibility/reach.

Acceptance tests and warranty

Materials inspection and testing:

- Test report 2.2 on request

Final inspection:

- Inspection certificate 3.1 to EN 10204 on request

Hydraulic test:

- Duty point in accordance with ISO 9906/3B for each pump with a delivery address or final destination in Europe

Acceptance test available at extra charge:

- Performance test to ISO 9906/2B

Other tests (e.g. vibrations, strength) on request.

Warranty:

- Warranties are given within the scope of the valid terms and conditions of sale and delivery.

Overview of product features / selection tables

Overview of variants

Other designs on request

Table 7: Symbols key

Symbol	Description
✗	Standard
-	Version not available / not feasible

Table 8: Overview of Etanorm V variants

Variant	102 / Volute casing	230 / Impeller	T [°C]	Main applications: Pumping neutral degreasing solutions and phosphating solutions	Main applications: Lubricating oil supply and sealing oil supply for turbines, generators, large compressors, large gear units
V-D GG	Grey cast iron EN-GJL-250 / A 48 Cl. 35B	Grey cast iron EN-GJL-250 / A 48 Cl. 35B	≤ +70	-	✗
V-D CC	Stainless steel 1.4408 / A743 Gr. CF8 M	Stainless steel 1.4408 / A743 Gr. CF8 M	≤ +70	-	✗
V-W GG	Grey cast iron EN-GJL-250 / A 48 Cl. 35B	Grey cast iron EN-GJL-250 / A 48 Cl. 35B	≤ +95	-	✗
V-W CC	Stainless steel 1.4408 / A743 Gr. CF8 M	Stainless steel 1.4408 / A743 Gr. CF8 M	≤ +95	✗	✗

Overview of fluids handled

Table 9: Symbols key

Symbol	Description
✗	Standard
-	Version not available / not feasible

Table 10: Excerpt from the overview of fluids handled with associated material variants

Fluid handled	Casing/impeller materials		Bearings		Fluid properties			
	Grey cast iron / grey cast iron	Cast CrNiMo steel / cast CrNiMo steel	Design W Plain bearing	Design D Cantilever	Specific concentration [%]	Temperature [°C]	Density [g/cm²]	pH
Water								
Cooling water[3] (without antifreeze)	✗	-	✗	✗	-	-	-	-
Cooling water pH ≥ 7.5 (with antifreeze)	✗	-	✗	✗	-	-	-	-
Slightly contaminated water[3]	✗	-	✗	✗	-	-	-	-
Pure water[4]	✗	-	✗	✗	-	-	-	-
Raw water[3]	✗	-	✗	✗	-	-	-	-
Swimming pool water, fresh water[3]	✗	-	✗	✗	-	-	-	-
Dam water[3][5]	✗	-	✗	✗	-	-	-	-
Partly desalinated water[6]	✗	-	✗	✗	-	-	-	-
Surface treatment – pre-treatment								
Fully desalinated water, free of solids	-	✗	✗	✗	-	≤ 60	1,0	~ 7,0
Silicate-free, alkaline degreasing or cleaning solution	✗	✗	✗	✗	0,3 - 5,0	≤ 80	1,1	8,5 - 13,0
Activation	-	✗	✗	✗	0,3 - 5,0	≤ 40	1,1	7,5 - 10,5
Zinc phosphating solution (bath)	-	✗	-	✗	~ 5,0	≤ 65	1,05	2,0 - 5,0
Iron phosphating solution (alkaline phosphate solution)	✗	-	-	✗	~ 5,0	≤ 70	1,05	4,0 - 6,0
Passivating	-	✗	✗	✗	≥ 1,0	≤ 50	1,0	3,0 - 6,0
Sodium hydroxide	✗	-	✗	✗	15 - 20	≤ 20	1,18	14,0
Surface treatment – painting								
Conventional paint on solvent basis	✗	-	✗	✗	10 - 40	25 - 35	~ 1,5	7,0
Cataphoretic dip paint	-	✗	-	✗	10 - 21	25 - 35	1,05 - 1,1	6,0 - 6,7
Anaphoretic dip paint	-	✗	-	✗	10 - 15	20 - 30	1,05 - 1,1	7,7
Ultrafiltrate = permeate. Pure filtrate, solids content < 3 %	✗	✗	✗	✗	-	20 - 30	1,0	5,5 - 6,0
Recirculated fluid, solids content < 3 %	✗	✗	✗	✗	-	20 - 30	1,1	6,0
Paint-laden water containing residues of metal, plastic or wood paints	✗	-	✗	✗	-	20 - 30	1,0 - 1,05	~ 7,0
Anolyte (dialyte) with acetic acid or formic acid, free of solids	-	✗	✗	✗	-	20 - 30	1	2,5 - 3,0
Accelerator (as preparation)	-	✗	✗	✗	-	-	1,05 - 1,1	-

Overview of material variants

Table 11: Symbols key

Symbol	Description
✗	Standard

1228.5/08-EN

3 General evaluation criteria for results of water analysis: pH ≥ 7; chlorides content (Cl) ≤ 250 mg/kg. Chlorine (Cl2) ≤ 0.6 mg/kg.
4 No ultra-pure water! Conductivity at 25 °C: ≤ 800 µS/cm, neutral with regard to chemical corrosion
5 If solids are contained, contact KSB.
6 Treatment to VdTÜV 1466; additional requirement: O2 ≤ 0.02 mg/l

Table 12: Material variants available

Size	Material variants	
	G	C
050-032-125.1	✗	✗
050-032-160.1	✗	✗
050-032-200.1	✗	✗
050-032-250.1	✗	✗
050-032-125	✗	✗
050-032-160	✗	✗
050-032-200	✗	✗
050-032-250	✗	✗
065-040-125	✗	✗
065-040-160	✗	✗
065-040-200	✗	✗
065-040-250	✗	✗
065-040-315	✗	✗
065-050-125	✗	✗
065-050-160	✗	✗
065-050-200	✗	✗
065-050-250	✗	✗
065-050-315	✗	✗
080-065-125	✗	✗
080-065-160	✗	✗
080-065-200	✗	✗
080-065-250	✗	✗
080-065-315	✗	✗
100-080-160	✗	✗
100-080-200	✗	✗
100-080-250	✗	✗
100-080-315	✗	✗
100-080-400	✗	✗
125-100-160	✗	✗
125-100-200	✗	✗
125-100-250	✗	✗
125-100-315	✗	✗
125-100-400	✗	✗
150-125-200	✗	✗
150-125-250	✗	✗
150-125-315	✗	✗
150-125-400	✗	✗
200-150-200	✗	✗
200-150-250	✗	✗
200-150-315	✗	✗
200-150-400	✗	✗

Bearings

Bearings used

Table 13: Overview of bearings

Shaft unit	Deep groove ball bearing	
	Pump end	Drive end
WS_25	6311 2Z C3	6310 2Z C3
WS_35	6311 2Z C3	6310 2Z C3
WS_55	6413 C3[7)]	6311 2Z C3

7 With Nilos ring AV 6413

Table 14: Overview of shaft units

Nominal diameter		Nominal impeller diameter					
[mm]		[mm]					
DN_1	DN_2	125	160	200	250	315	400
50	32	WS_25	WS_25	WS_25	WS_25	WS_35	-
65	40	WS_25	WS_25	WS_25	WS_25	WS_35	-
65	50	WS_25	WS_25	WS_25	WS_25	WS_35	-
80	65	WS_25	WS_25	WS_25	WS_35	WS_35	WS_55
100	80	-	WS_25	WS_35	WS_35	WS_35	WS_55
125	100	-	WS_35	WS_35	WS_35	WS_35	WS_55
150	125	-	-	WS_35	-	WS_55	WS_55
200	150	-	-	WS_35	-	WS_55	WS_55

1228.5/08-EN

Overview of functions for variable speed version

Table 15: Overview of functions

Functions / firmware	PumpDrive 2	PumpDrive 2 Eco
Protective functions		
Thermal motor protection	✘	✘
Mains voltage monitoring	✘	✘
Phase failure, motor side	✘	✘
Short-circuit monitoring, motor side (phase to phase and phase to earth)	✘	✘
Dynamic overload protection by speed limitation (i^2t control)	✘	✘
Resonant frequency suppression	✘	✘
Broken wire detection (live zero)	✘	✘
Protection against dry running and hydraulic blockage (sensorless due to learning function)	✘	✘
Dry running protection (external control signal)	✘	✘
Operating point estimation and characteristic curve control	✘	✘
Open-loop control		
Open-loop control mode	✘	✘
Closed-loop control		
Closed-loop control mode via integrated PID controller	✘	✘
Pressure control / differential pressure control (Δp const)	✘	✘
Pressure control / differential pressure control with dynamic pressure compensation (Δp var)	✘	✘
Flow rate control	✘	✘
Sensorless differential pressure control (Δp const) in a single-pump configuration	✘	✘
Sensorless differential pressure control with dynamic pressure compensation (Δp var) in a single-pump configuration	✘	✘
Sensorless flow rate control	✘	✘
Level control	✘	✘
Temperature control	✘	✘
Alternative setpoint	✘	-
Operation and monitoring (display)		
Measured value display (pressure, head, speed, electric power, motor voltage, motor current, torque)	✘	✘
Fault history	✘	✘
Operating hours counter	✘	✘
Fault reporting via relay	✘	✘
Frequency inverter functions		
Programmable start ramps and stop ramps	✘	✘
Field-oriented control (vector control), V/f control	✘	✘
Configurable motor control method (asynchronous motor, KSB SuPremE)	✘	✘
Automatic motor adaptation (AMA)	✘	✘
Motor standstill heater	✘	✘
Manual-0-automatic mode	✘	✘
External OFF	✘	✘
External minimum speed	✘	✘
Sleep mode (stand-by mode)	✘	✘
Energy savings meter	✘	-
Pump functions		
Flow rate estimation	✘	✘
M12 module with PumpMeter bus connection	✘	✘
M12 module for dual-pump configuration	✘	✘
M12 module for multiple pump configuration with up to 6 pumps	✘	✘
Functional check run	✘	✘
Deragging	✘	✘
Integrated dual-pump configuration (1×100 % with redundant pump or 2×50 % without redundant pump)	✘	✘
Multiple pump configuration with up to 6 pumps	✘	✘
Waste water function: start-up at maximum speed	✘	-
Waste water function: rinsing function	✘	-
Operation		

Functions / firmware	PumpDrive 2	PumpDrive 2 Eco
Control panel	✗	✗[8)]
Commissioning wizard	✗	✗[9)]
Favourites list	✗	-
Service interface	✗	✗

Pressure limits and temperature limits

Table 16: Pressure limits and temperature limits as a function of material variant

Material variant	Fluid temperature	Discharge pressure p_2[10)]	Test pressure[11)]
	[°C]	[bar]	[bar]
GG, GB, GC, CC	Design D: ≤ 70	10	13,5
GG, GB, GC, CC	Design W: ≤ 95	10	13,5

1228.5/08-EN

8 Some functions can only be parameterised and/or displayed using the KSB ServiceTool (see operating manual).
9 Only available via KSB ServiceTool or app
10 The sum of inlet pressure and shut-off head must not exceed the values indicated in the diagram.
11 The casing components are checked for leakage by means of internal pressure tests to ZN 1650 with water.

Technical data

Pump

Table 17: Technical data

Size	Bearing bracket	Number of vanes	Impeller					Speed limit (immersion depth ≤ 750 mm)			
			Impeller outlet width	Free passage diameter	Impeller inlet diameter	Nominal impeller diameter		Design W		Design D	
						Maximum	Minimum	Maximum	Minimum	Maximum	Minimum
			[mm]					[rpm]			
050-032-125.1	WS_25	6	6	6,0	52	139	104	3600	800	3600	800
050-032-160.1	WS_25	6	10	5,4	63	170	136	3600	800	3600	800
050-032-200.1	WS_25	6	7	5,3	62	204	170	3600	800	3600	800
050-032-250.1	WS_25	6	13	5,2	70	254	200	3500	800	3600	800
050-032-125	WS_25	6	7	5,7	52	139	104	3600	800	3600	800
050-032-160	WS_25	6	6	5,8	54	174	136	3600	800	3600	800
050-032-200	WS_25	6	9	6,7	63	209	170	3600	800	3600	800
050-032-250	WS_25	6	14	7,1	74	261	209	3500	800	3600	800
065-040-125	WS_25	6	9	9,6	69	139	104	3500	800	3600	800
065-040-160	WS_25	6	20	11,5	88	174	128	3600	800	3600	800
065-040-200	WS_25	6	17	8,9	87	209	165	3600	800	3600	800
065-040-250	WS_25	6	14	8,0	83	260	200	3500	800	3600	800
065-040-315	WS_35	6	26	7,1	99	326	260	2900	800	2300	800
065-050-125	WS_25	6	6	11,6	58	142	112	3500	800	3600	800
065-050-160	WS_25	6	8	11,6	63	174	128	3600	800	3600	800
065-050-200	WS_25	6	8	11,9	73	219	170	3500	800	3600	800
065-050-250	WS_25	6	8	10,0	75	260	215	3500	800	3600	800
065-050-315	WS_35	6	11	9,5	84	323	265	2900	800	2400	800
080-065-125	WS_25	6	10	12,9	86	141	130	3500	800	3600	800
080-065-160	WS_25	6	21	12,2	92	174	132	3600	800	3600	800
080-065-200	WS_25	6	17	13,3	100	219	175	3500	800	3600	800
080-065-250	WS_35	6	15	14,3	101	260	215	3500	800	3600	800
080-065-315	WS_35	6	32	14,0	124	320	260	2900	800	1900	800
100-080-160	WS_25	6	25	15,1	115	174	154	3500	800	3600	800
100-080-200	WS_35	6	19	15,2	115	219	180	3500	800	3600	800
100-080-250	WS_35	6	38	15,8	135	269	215	3500	800	3600	800
100-080-315	WS_35	6	33	17,8	142	334	269	2900	800	1900	800
100-080-400	WS_55	6	14	14,3	107	398	330	1800	800	1900	800
125-100-160	WS_35	6	19	16,4	115	185	177	3600	800	3600	800
125-100-200	WS_35	6	15	17,9	129	219	179	3500	800	3600	800
125-100-250	WS_35	6	27	18,8	145	269	210	3500	800	3600	800
125-100-315	WS_35	6	23	19,9	142	334	270	2900	800	1900	800
125-100-400	WS_55	6	18	17,1	142	401	329	1800	800	1900	800
150-125-200	WS_35	6	41	21,1	160	224	205	3500	800	3600	800
150-125-250	WS_35	6	37	22,4	162	269	218	2000	800	2000	800
150-125-315	WS_55	6	31	22,6	162	334	270	2300	800	1900	800
150-125-400	WS_55	6	26	20,9	162	419	330	1800	800	1800	800
200-150-200	WS_35	5	60	25,2	179	224	215	1800	800	2100	800
200-150-250	WS_35	6	49	23,0	191	269	220	1800	800	1800	800
200-150-315	WS_55	6	40	26,9	192	334	264	1800	800	1800	800
200-150-400	WS_55	6	33	23,8	191	419	330	1800	800	1800	800

Immersion depths

Table 18: Symbols key

Symbol	Description
✓	Permissible immersion depth at rated speed
✓ (maximum speed)	Permissible immersion depth with PumpDrive (permissible maximum speed for operation on a frequency inverter)
-	Combination impermissible

Table 19: Overview of immersion depths for Etanorm V (2-pole)

Size 2 poles	Shaft unit	Motor	50 Hz							60 Hz						
			P_N	Immersion depth						P_N	Immersion depth					
				< 1000 mm	1000 mm	1250 mm	1500 mm	1750 mm	2000 mm		< 1000 mm	1000 mm	1250 mm	1500 mm	1750 mm	2000 mm
			[kW]	(Maximum speed [rpm])						[kW]	(Maximum speed [rpm])					
050-032-125.1	25	100L	3,0	✓ (3600)	✓ (3000)	✓	✓	✓	✓	3,45	✓ (3600)	✓	-	✓	✓	✓
050-032-125.1	25	132S	5,5	✓ (3600)	✓ (3000)	✓	-	✓	✓	6,3	✓ (3600)	✓	-	✓	✓	✓
050-032-125.1	25	112M	4,0	✓ (3600)	✓ (3000)	✓	✓	✓	✓	4,6	✓ (3600)	✓	-	✓	✓	✓
050-032-125.1	25	132S	7,5	✓ (3600)	✓ (3000)	✓	-	✓	✓	8,6	✓ (3600)	✓	-	✓	✓	✓
050-032-125	25	100L	3,0	✓ (3600)	✓ (3000)	✓	✓	✓	✓	3,45	✓ (3600)	✓	-	✓	✓	✓
050-032-125	25	112M	4,0	✓ (3600)	✓ (3000)	✓	✓	✓	✓	4,6	✓ (3600)	✓	-	✓	✓	✓
050-032-125	25	132S	5,5	✓ (3600)	✓ (3000)	✓	-	✓	✓	6,3	✓ (3600)	✓	-	✓	✓	✓
050-032-125	25	132S	7,5	✓ (3600)	✓ (3000)	✓	-	✓	✓	8,6	✓ (3600)	✓	-	✓	✓	✓
050-032-160.1	25	100L	3,0	✓ (3600)	✓ (3000)	✓	✓	✓	✓	3,45	✓ (3600)	✓	-	✓	✓	✓
050-032-160.1	25	112M	4,0	✓ (3600)	✓ (3000)	✓	✓	✓	✓	4,6	✓ (3600)	✓	-	✓	✓	✓
050-032-160.1	25	132S	5,5	✓ (3600)	✓ (3000)	✓	-	✓	✓	6,3	✓ (3600)	✓	-	✓	✓	✓
050-032-160.1	25	132S	7,5	✓ (3600)	✓ (3000)	✓	-	✓	✓	8,6	✓ (3600)	✓	-	✓	✓	✓
050-032-160.1	25	160M	11	✓ (3600)	✓ (3000)	✓	-	✓	✓	12,6	✓ (3600)	✓	-	✓	✓	✓
050-032-160	25	100L	3,0	✓ (3600)	✓ (3000)	✓	✓	✓	✓	3,45	✓ (3600)	✓	-	✓	✓	✓
050-032-160	25	112M	4,0	✓ (3600)	✓ (3000)	✓	✓	✓	✓	4,6	✓ (3600)	✓	-	✓	✓	✓
050-032-160	25	132S	5,5	✓ (3600)	✓ (3000)	✓	-	✓	✓	6,3	✓ (3600)	✓	-	✓	✓	✓
050-032-160	25	132S	7,5	✓ (3600)	✓ (3000)	✓	-	✓	✓	8,6	✓ (3600)	✓	-	✓	✓	✓
050-032-160	25	160M	11	✓ (3600)	✓ (3000)	✓	-	✓	✓	12,6	✓ (3600)	✓	-	✓	✓	✓
050-032-200.1	25	100L	3,0	✓ (3600)	✓ (3000)	✓	✓	✓	✓	3,45	✓ (3600)	✓	-	✓	✓	✓
050-032-200.1	25	112M	4,0	✓ (3600)	✓ (3000)	✓	✓	✓	✓	4,6	✓ (3600)	✓	-	✓	✓	✓
050-032-200.1	25	132S	5,5	✓ (3600)	✓ (3000)	✓	-	✓	✓	6,3	✓ (3600)	✓	-	✓	✓	✓
050-032-200.1	25	132S	7,5	✓ (3600)	✓ (3000)	✓	-	✓	✓	8,6	✓ (3600)	✓	-	✓	✓	✓
050-032-200.1	25	160M	11	✓ (3600)	✓ (3000)	✓	-	✓	✓	12,6	✓ (3600)	✓	-	✓	✓	✓
050-032-200.1	25	160M	15	✓ (3600)	✓ (3000)	✓	-	✓	✓	17,3	✓ (3600)	✓	-	✓	✓	✓
050-032-200	25	100L	3,0	✓ (3600)	✓ (3000)	✓	✓	✓	✓	-	-	-	-	-	-	-
050-032-200	25	112M	4,0	✓ (3600)	✓ (3000)	✓	✓	✓	✓	4,6	✓ (3600)	✓	-	✓	✓	✓
050-032-200	25	132S	5,5	✓ (3600)	✓ (3000)	✓	-	✓	✓	6,3	✓ (3600)	✓	-	✓	✓	✓
050-032-200	25	132S	7,5	✓ (3600)	✓ (3000)	✓	-	✓	✓	8,6	✓ (3600)	✓	-	✓	✓	✓
050-032-200	25	160M	11	✓ (3600)	✓ (3000)	✓	-	✓	✓	12,6	✓ (3600)	✓	-	✓	✓	✓
050-032-200	25	160M	15	✓ (3600)	✓ (3000)	✓	-	✓	✓	17,3	✓ (3600)	✓	-	✓	✓	✓
050-032-250.1	25	112M	4,0	✓ (3500)	✓ (3000)	✓	-	✓	✓	-	-	-	-	-	-	-
050-032-250.1	25	132S	5,5	✓ (3500)	✓ (3000)	✓	-	✓	✓	-	-	-	-	-	-	-
050-032-250.1	25	132S	7,5	✓ (3500)	✓ (3000)	✓	-	✓	✓	-	-	-	-	-	-	-
050-032-250.1	25	160M	11	✓ (3500)	✓ (3000)	✓	-	✓	✓	-	-	-	-	-	-	-
050-032-250.1	25	160M	15	✓ (3500)	✓ (3000)	✓	-	✓	✓	-	-	-	-	-	-	-
050-032-250	25	132S	7,5	✓ (3500)	✓ (3000)	✓	-	✓	✓	-	-	-	-	-	-	-
050-032-250	25	160M	11	✓ (3500)	✓ (3000)	✓	-	✓	✓	-	-	-	-	-	-	-
050-032-250	25	160M	15	✓ (3500)	✓ (3000)	✓	-	✓	✓	-	-	-	-	-	-	-
050-032-250	25	160L	18,5	✓ (3500)	✓ (3000)	✓	-	✓	✓	-	-	-	-	-	-	-
065-040-125	25	100L	3,0	✓ (3500)	✓ (3000)	✓	-	✓	✓	-	-	-	-	-	-	-
065-040-125	25	112M	4,0	✓ (3500)	✓ (3000)	✓	-	✓	✓	4,6	✓ (3500)	✓	-	✓	✓	✓
065-040-125	25	132S	5,5	✓ (3500)	✓ (3000)	✓	-	✓	✓	6,3	✓ (3500)	✓	-	✓	✓	✓
065-040-125	25	132S	7,5	✓ (3500)	✓ (3000)	✓	-	✓	✓	8,6	✓ (3500)	✓	-	✓	✓	✓
065-040-125	25	160M	11	✓ (3500)	✓ (3000)	✓	-	✓	✓	12,6	✓ (3500)	✓	-	✓	✓	✓
065-040-160	25	100L	3,0	✓ (3600)	✓ (3000)	✓	-	✓	✓	-	-	-	-	-	-	-
065-040-160	25	112M	4,0	✓ (3600)	✓ (3000)	✓	-	✓	✓	-	-	-	-	-	-	-
065-040-160	25	132S	5,5	✓ (3600)	✓ (3000)	✓	-	✓	✓	6,3	✓ (3600)	✓	-	✓	✓	✓
065-040-160	25	132S	7,5	✓ (3600)	✓ (3000)	✓	-	✓	✓	8,6	✓ (3600)	✓	-	✓	✓	✓
065-040-160	25	160M	11	✓ (3600)	✓ (3000)	✓	-	✓	✓	12,6	✓ (3600)	✓	-	✓	✓	✓
065-040-160	25	160M	15	✓ (3600)	✓ (3000)	✓	-	✓	✓	17,3	✓ (3600)	✓	-	✓	✓	✓
065-040-160	25	160L	18,5	✓ (3600)	✓ (3000)	✓	-	✓	✓	21,3	✓ (3600)	✓	-	✓	✓	✓
065-040-160	25	180M	22	✓ (3600)	✓ (3000)	✓	-	✓	✓	24,5	✓ (3600)	✓	-	✓	✓	✓
065-040-200	25	132S	5,5	✓ (3600)	✓ (3000)	✓	-	✓	✓	-	-	-	-	-	-	-

1228.5/08-EN

Size 2 poles	Shaft unit	Motor	50 Hz P_N [kW]	Immersion depth < 1000 mm (Maximum speed [rpm])	1000 mm	1250 mm	1500 mm	1750 mm	2000 mm	60 Hz P_N [kW]	Immersion depth < 1000 mm (Maximum speed [rpm])	1000 mm	1250 mm	1500 mm	1750 mm	2000 mm
065-040-200	25	132S	7,5	✓ (3600)	✓ (3000)	✓	-	✓	✓	-	-	-	-	-	-	-
065-040-200	25	160M	11	✓ (3600)	✓ (3000)	✓	-	✓	✓	12,6	✓ (3600)	✓	-	✓	✓	✓
065-040-200	25	160M	15	✓ (3600)	✓ (3000)	✓	-	✓	✓	17,3	✓ (3600)	✓	-	✓	✓	✓
065-040-200	25	160L	18,5	✓ (3600)	✓ (3000)	✓	-	✓	✓	21,3	✓ (3600)	✓	-	✓	✓	✓
065-040-200	25	180M	22	✓ (3600)	✓ (3000)	✓	-	✓	✓	24,5	✓ (3600)	✓	-	✓	✓	✓
065-040-200	25	200L	30	✓ (3600)	✓ (3000)	✓	-	✓	✓	33,5	✓ (3600)	✓	-	✓	✓	✓
065-040-250	25	160M	11	✓ (3500)	✓ (3000)	✓	-	✓	✓	-	-	-	-	-	-	-
065-040-250	25	160M	15	✓ (3500)	✓ (3000)	✓	-	✓	✓	-	-	-	-	-	-	-
065-040-250	25	160L	18,5	✓ (3500)	✓ (3000)	✓	-	✓	✓	-	-	-	-	-	-	-
065-040-250	25	180M	22	✓ (3500)	✓ (3000)	✓	-	✓	✓	-	-	-	-	-	-	-
065-040-250	25	200L	30	✓ (3500)	✓ (3000)	✓	-	✓	✓	-	-	-	-	-	-	-
065-050-125	25	100L	3,0	✓ (3500)	✓ (3000)	✓	-	✓	✓	-	-	-	-	-	-	-
065-050-125	25	112M	4,0	✓ (3500)	✓ (3000)	✓	-	✓	✓	4,6	✓ (3500)	✓	-	✓	✓	✓
065-050-125	25	132S	5,5	✓ (3500)	✓ (3000)	✓	-	✓	✓	6,3	✓ (3500)	✓	-	✓	✓	✓
065-050-125	25	132S	7,5	✓ (3500)	✓ (3000)	✓	-	✓	✓	8,6	✓ (3500)	✓	-	✓	✓	✓
065-050-125	25	160M	11	✓ (3500)	✓ (3000)	✓	-	✓	✓	12,6	✓ (3500)	✓	-	✓	✓	✓
065-050-160	25	132S	5,5	✓ (3600)	✓ (3000)	✓	-	✓	✓	-	-	-	-	-	-	-
065-050-160	25	132S	7,5	✓ (3600)	✓ (3000)	✓	-	✓	✓	8,6	✓ (3600)	✓	-	✓	✓	✓
065-050-160	25	160M	11	✓ (3600)	✓ (3000)	✓	-	✓	✓	12,6	✓ (3600)	✓	-	✓	✓	✓
065-050-160	25	160M	15	✓ (3600)	✓ (3000)	✓	-	✓	✓	17,3	✓ (3600)	✓	-	✓	✓	✓
065-050-160	25	160L	18,5	✓ (3600)	✓ (3000)	✓	-	✓	✓	21,3	✓ (3600)	✓	-	✓	✓	✓
065-050-160	25	180M	22	✓ (3600)	✓ (3000)	✓	-	✓	✓	24,5	✓ (3600)	✓	-	✓	✓	✓
065-050-160	25	200L	30	✓ (3600)	✓ (3000)	✓	✓	-	✓	33,5	✓ (3600)	✓	✓	-	✓	✓
065-050-160	25	200L	37	✓ (3600)	✓ (3000)	✓	✓	-	✓	41,5	✓ (3600)	✓	✓	-	✓	✓
065-050-200	25	160M	11	✓ (3500)	✓ (3000)	✓	-	✓	✓	-	-	-	-	-	-	-
065-050-200	25	160M	15	✓ (3500)	✓ (3000)	✓	-	✓	✓	17,3	✓ (3500)	✓	-	✓	✓	✓
065-050-200	25	160L	18,5	✓ (3500)	✓ (3000)	✓	-	✓	✓	21,3	✓ (3500)	✓	-	✓	✓	✓
065-050-200	25	180M	22	✓ (3500)	✓ (3000)	✓	-	✓	✓	24,5	✓ (3500)	✓	-	✓	✓	✓
065-050-200	25	200L	30	✓ (3500)	✓ (3000)	✓	✓	-	✓	33,5	✓ (3500)	✓	✓	-	✓	✓
065-050-200	25	200L	37	✓ (3500)	✓ (3000)	✓	✓	-	✓	41,5	✓ (3500)	✓	✓	-	✓	✓
065-050-250	25	160M	15	✓ (3500)	✓ (3000)	✓	-	✓	✓	-	-	-	-	-	-	-
065-050-250	25	160L	18,5	✓ (3500)	✓ (3000)	✓	-	✓	✓	-	-	-	-	-	-	-
065-050-250	25	180M	22	✓ (3500)	✓ (3000)	✓	-	✓	✓	-	-	-	-	-	-	-
065-050-250	25	200L	30	✓ (3500)	✓ (3000)	✓	-	✓	✓	-	-	-	-	-	-	-
065-050-250	25	200L	37	✓ (3500)	✓ (3000)	✓	-	✓	✓	-	-	-	-	-	-	-
080-065-125	25	112M	4,0	✓ (3500)	✓ (3000)	✓	✓	✓	✓	-	-	-	-	-	-	-
080-065-125	25	132S	5,5	✓ (3500)	✓ (3000)	✓	-	✓	✓	6,3	✓ (3500)	✓	-	✓	✓	✓
080-065-125	25	132S	7,5	✓ (3500)	✓ (3000)	✓	-	✓	✓	8,6	✓ (3500)	✓	-	✓	✓	✓
080-065-125	25	160M	11	✓ (3500)	✓ (3000)	✓	-	✓	✓	12,6	✓ (3500)	✓	-	✓	✓	✓
080-065-125	25	160M	15	✓ (3500)	✓ (3000)	✓	-	✓	✓	17,3	✓ (3500)	✓	-	✓	✓	✓
080-065-160	25	132S	5,5	✓ (3600)	✓ (3000)	✓	-	✓	✓	-	-	-	-	-	-	-
080-065-160	25	132S	7,5	✓ (3600)	✓ (3000)	✓	-	✓	✓	-	-	-	-	-	-	-
080-065-160	25	160M	11	✓ (3600)	✓ (3000)	✓	-	✓	✓	12,6	✓ (3600)	✓	-	✓	✓	✓
080-065-160	25	160M	15	✓ (3600)	✓ (3000)	✓	-	✓	✓	17,3	✓ (3600)	✓	-	✓	✓	✓
080-065-160	25	160L	18,5	✓ (3600)	✓ (3000)	✓	-	✓	✓	21,3	✓ (3600)	✓	-	✓	✓	✓
080-065-160	25	180M	22	✓ (3600)	✓ (3000)	✓	-	✓	✓	24,5	✓ (3600)	✓	-	✓	✓	✓
080-065-160	25	200L	30	✓ (3600)	✓ (3000)	✓	✓	-	✓	33,5	✓ (3600)	✓	✓	-	✓	✓
080-065-160	25	200L	37	✓ (3600)	✓ (3000)	✓	✓	-	✓	41,5	✓ (3600)	✓	✓	-	✓	✓
080-065-200	25	160M	11	✓ (3500)	✓ (3000)	✓	-	✓	✓	-	-	-	-	-	-	-
080-065-200	25	160M	15	✓ (3500)	✓ (3000)	✓	-	✓	✓	-	-	-	-	-	-	-
080-065-200	25	160L	18,5	✓ (3500)	✓ (3000)	✓	-	✓	✓	21,3	✓ (3500)	✓	-	✓	✓	✓
080-065-200	25	180M	22	✓ (3500)	✓ (3000)	✓	-	✓	✓	24,5	✓ (3500)	✓	-	✓	✓	✓
080-065-200	25	200L	30	✓ (3500)	✓ (3000)	✓	✓	-	✓	33,5	✓ (3500)	✓	✓	-	✓	✓
080-065-250	35	180M	22	✓ (3500)	✓ (3000)	✓	-	✓	✓	-	-	-	-	-	-	-
080-065-250	35	200L	30	✓ (3500)	✓ (3000)	✓	-	✓	✓	-	-	-	-	-	-	-
080-065-250	35	200L	37	✓ (3500)	✓ (3000)	✓	-	✓	✓	-	-	-	-	-	-	-
080-065-250	35	225M	45	✓ (3500)	✓ (3000)	✓	✓	-	✓	-	-	-	-	-	-	-
100-080-160	25	160M	11	✓ (3500)	✓ (3000)	✓	-	✓	✓	-	-	-	-	-	-	-
100-080-160	25	160M	15	✓ (3500)	✓ (3000)	✓	-	✓	✓	-	-	-	-	-	-	-
100-080-160	25	160L	18,5	✓ (3500)	✓ (3000)	✓	-	✓	✓	21,3	✓ (3500)	✓	-	✓	✓	✓
100-080-160	25	180M	22	✓ (3500)	✓ (3000)	✓	-	✓	✓	24,5	✓ (3500)	✓	-	✓	✓	✓
100-080-160	25	200L	30	✓ (3500)	✓ (3000)	✓	✓	-	✓	33,5	✓ (3500)	✓	✓	-	✓	✓

Size 2 poles	Shaft unit	Motor	50 Hz							60 Hz						
			P_N	Immersion depth						P_N	Immersion depth					
				< 1000 mm	1000 mm	1250 mm	1500 mm	1750 mm	2000 mm		< 1000 mm	1000 mm	1250 mm	1500 mm	1750 mm	2000 mm
			[kW]	(Maximum speed [rpm])						[kW]	(Maximum speed [rpm])					
100-080-160	25	200L	37	✓ (3500)	✓ (3000)	✓	✓	-	✓	41,5	✓ (3500)	✓	✓	-	✓	✓
100-080-200	35	160L	18,5	✓ (3500)	✓ (3000)	✓	-	✓	✓	-	-	-	-	-	-	-
100-080-200	35	180M	22	✓ (3500)	✓ (3000)	✓	-	✓	✓	-	-	-	-	-	-	-
100-080-200	35	200L	30	✓ (3500)	✓ (3000)	✓	-	✓	✓	33,5	✓ (3500)	✓ (3000)	✓	-	✓	✓
100-080-200	35	200L	37	✓ (3500)	✓ (3000)	✓	-	✓	✓	41,5	✓ (3500)	✓ (3000)	✓	-	✓	✓
100-080-200	35	225M	45	✓ (3500)	✓ (3000)	✓	✓	-	✓	51	✓ (3500)	✓ (3000)	✓	-	✓	✓
100-080-200	35	250M	55	✓ (3500)	✓ (3000)	✓	✓	-	✓	63	✓ (3500)	✓ (3000)	✓	-	✓	✓
100-080-200	35	280S	75	✓ (3500)	✓ (3000)	✓	✓	-	✓	84	✓ (3500)	✓ (3000)	✓	-	✓	✓
100-080-250	35	200L	30	✓ (3500)	✓ (2900)	✓	-	✓	✓	-	-	-	-	-	-	-
100-080-250	35	200L	37	✓ (3500)	✓ (2900)	✓	-	✓	✓	-	-	-	-	-	-	-
100-080-250	35	225M	45	✓ (3500)	✓ (2900)	✓	✓	-	✓	-	-	-	-	-	-	-
100-080-250	35	250M	55	✓ (3500)	✓ (2900)	✓	✓	-	✓	-	-	-	-	-	-	-
100-080-250	35	280S	75	✓ (3500)	✓ (2900)	✓	✓	-	✓	-	-	-	-	-	-	-
100-080-250	35	280M	90	✓ (3500)	✓ (2900)	✓	✓	-	✓	-	-	-	-	-	-	-
125-100-160	35	180M	22	✓ (3600)	✓ (3000)	✓	-	✓	✓	-	-	-	-	-	-	-
125-100-160	35	200L	30	✓ (3600)	✓ (3000)	✓	-	✓	✓	-	-	-	-	-	-	-
125-100-160	35	200L	37	✓ (3600)	✓ (3000)	✓	-	✓	✓	41,5	✓ (3600)	✓ (3000)	✓	-	✓	✓
125-100-160	35	225M	45	✓ (3600)	✓ (3000)	✓	✓	-	✓	51	✓ (3600)	✓ (3000)	✓	-	✓	✓
125-100-160	35	250M	55	✓ (3600)	✓ (3000)	✓	✓	-	✓	63	✓ (3600)	✓ (3000)	✓	-	✓	✓
125-100-160	35	280S	75	✓ (3600)	✓ (3000)	✓	✓	-	✓	84	✓ (3600)	✓ (3000)	✓	-	✓	✓
125-100-200	35	200L	30	✓ (3500)	✓ (3000)	✓	-	✓	✓	-	-	-	-	-	-	-
125-100-200	35	200L	37	✓ (3500)	✓ (3000)	✓	-	✓	✓	-	-	-	-	-	-	-
125-100-200	35	225M	45	✓ (3500)	✓ (3000)	✓	✓	-	✓	51	✓ (3500)	✓ (3000)	✓	-	✓	✓
125-100-200	35	250M	55	✓ (3500)	✓ (3000)	✓	✓	-	✓	63	✓ (3500)	✓ (3000)	✓	-	✓	✓
125-100-200	35	280S	75	✓ (3500)	✓ (3000)	✓	✓	-	✓	84	✓ (3500)	✓ (3000)	✓	-	✓	✓
125-100-200	35	280M	90	✓ (3500)	✓ (3000)	✓	✓	-	✓	101	✓ (3500)	✓ (3000)	✓	-	✓	✓
125-100-250	35	225M	45	✓ (3500)	✓ (3000)	✓ (3000)	✓	-	✓	-	-	-	-	-	-	-
125-100-250	35	250M	55	✓ (3500)	✓ (3000)	✓ (3000)	✓	-	✓	-	-	-	-	-	-	-
125-100-250	35	280S	75	✓ (3500)	✓ (3000)	✓ (3000)	✓	-	✓	-	-	-	-	-	-	-
125-100-250	35	280M	90	✓ (3500)	✓ (3000)	✓ (3000)	✓	-	✓	-	-	-	-	-	-	-
150-125-200	35	225M	45	✓ (3500)	✓ (3500)	✓ (3000)	✓	-	✓	-	-	-	-	-	-	-
150-125-200	35	250M	55	✓ (3500)	✓ (3500)	✓ (3000)	✓	-	✓	-	-	-	-	-	-	-
150-125-200	35	280S	75	✓ (3500)	✓ (3500)	✓ (3000)	✓	-	✓	84	✓ (3500)	✓ (3500)	✓	-	✓	✓
150-125-200	35	280M	90	✓ (3500)	✓ (3500)	✓ (3000)	✓	-	✓	101	✓ (3500)	✓ (3500)	✓	-	✓	✓

1228.5/08-EN

Table 20: Symbols key

Symbol	Description
✓	Permissible immersion depth at rated speed
✓ (maximum speed)	Permissible immersion depth with PumpDrive (permissible maximum speed for operation on a frequency inverter)
-	Combination impermissible

Table 21: Overview of immersion depths for Etanorm V (4-pole)

Size 4 poles	Shaft unit	Motor	50 Hz							60 Hz						
			P_N	Immersion depth						P_N	Immersion depth					
				< 1000 mm	1000 mm	1250 mm	1500 mm	1750 mm	2000 mm		< 1000 mm	1000 mm	1250 mm	1500 mm	1750 mm	2000 mm
			[kW]	(Maximum speed [rpm])						[kW]	(Maximum speed [rpm])					
050-032-125.1	25	100M	2,2	✓ (3600)	✓ (3000)	✓ (1800)	✓ (1500)	✓	-	2,55	✓ (3600)	✓ (3000)	✓ (1800)	✓	-	✓
050-032-125.1	25	100L	3,0	✓ (3600)	✓ (3000)	✓ (1800)	✓ (1500)	✓	-	3,45	✓ (3600)	✓ (3000)	✓ (1800)	✓	-	✓
050-032-125	25	100M	2,2	✓ (3600)	✓ (3000)	✓ (1800)	✓ (1500)	✓	-	2,55	✓ (3600)	✓ (3000)	✓ (1800)	✓	-	✓
050-032-125	25	100L	3,0	✓ (3600)	✓ (3000)	✓ (1800)	✓ (1500)	✓	-	3,45	✓ (3600)	✓ (3000)	✓ (1800)	✓	-	✓
050-032-160.1	25	100M	2,2	✓ (3600)	✓ (3000)	✓ (1800)	✓ (1500)	✓	-	2,55	✓ (3600)	✓ (3000)	✓ (1800)	✓	-	✓
050-032-160.1	25	100L	3,0	✓ (3600)	✓ (3000)	✓ (1800)	✓ (1500)	✓	-	3,45	✓ (3600)	✓ (3000)	✓ (1800)	✓	-	✓
050-032-160	25	100M	2,2	✓ (3600)	✓ (3000)	✓ (1800)	✓ (1500)	✓	-	2,55	✓ (3600)	✓ (3000)	✓ (1800)	✓	-	✓
050-032-160	25	100L	3,0	✓ (3600)	✓ (3000)	✓ (1800)	✓ (1500)	✓	-	3,45	✓ (3600)	✓ (3000)	✓ (1800)	✓	-	✓
050-032-200.1	25	100M	2,2	✓ (3600)	✓ (3000)	✓ (1800)	✓ (1500)	✓	-	2,55	✓ (3600)	✓ (3000)	✓ (1800)	✓	-	✓
050-032-200.1	25	100L	3,0	✓ (3600)	✓ (3000)	✓ (1800)	✓ (1500)	✓	-	3,45	✓ (3600)	✓ (3000)	✓ (1800)	✓	-	✓
050-032-200	25	100M	2,2	✓ (3600)	✓ (3000)	✓ (1800)	✓ (1500)	✓	-	2,55	✓ (3600)	✓ (3000)	✓ (1800)	✓	-	✓
050-032-200	25	100L	3,0	✓ (3600)	✓ (3000)	✓ (1800)	✓ (1500)	✓	-	3,45	✓ (3600)	✓ (3000)	✓ (1800)	✓	-	✓
050-032-200	25	112M	4,0	✓ (3600)	✓ (3000)	✓ (1800)	✓ (1500)	✓	-	4,6	✓ (3600)	✓ (3000)	✓ (1800)	✓	-	✓
050-032-250.1	25	100M	2,2	✓ (3500)	✓ (3000)	✓ (1800)	✓ (1500)	✓	-	2,55	✓ (3500)	✓ (3000)	✓ (1800)	✓	-	✓
050-032-250.1	25	100L	3,0	✓ (3500)	✓ (3000)	✓ (1800)	✓ (1500)	✓	-	3,45	✓ (3500)	✓ (3000)	✓ (1800)	✓	-	✓
050-032-250.1	25	112M	4,0	✓ (3500)	✓ (3000)	✓ (1800)	✓ (1500)	✓	-	4,6	✓ (3500)	✓ (3000)	✓ (1800)	✓	-	✓
050-032-250.1	25	132S	5,5	✓ (3500)	✓ (3000)	✓ (1800)	✓ (1500)	✓	-	6,3	✓ (3500)	✓ (3000)	✓ (1800)	✓	✓	-
050-032-250	25	100M	2,2	✓ (3500)	✓ (3000)	✓ (1800)	✓ (1500)	✓	-	2,55	✓ (3500)	✓ (3000)	✓ (1800)	✓	-	✓
050-032-250	25	100L	3,0	✓ (3500)	✓ (3000)	✓ (1800)	✓ (1500)	✓	-	3,45	✓ (3500)	✓ (3000)	✓ (1800)	✓	-	✓
050-032-250	25	112M	4,0	✓ (3500)	✓ (3000)	✓ (1800)	✓ (1500)	✓	-	4,6	✓ (3500)	✓ (3000)	✓ (1800)	✓	-	✓
050-032-250	25	132S	5,5	✓ (3500)	✓ (3000)	✓ (1800)	✓ (1500)	✓	✓	6,3	✓ (3500)	✓ (3000)	✓ (1800)	✓	✓	-
050-032-250	25	132M	7,5	✓ (3500)	✓ (3000)	✓ (1800)	✓ (1500)	✓	✓	8,6	✓ (3500)	✓ (3000)	✓ (1800)	✓	✓	-
065-040-125	25	100M	2,2	✓ (3500)	✓ (3000)	✓ (1800)	✓ (1500)	✓	-	2,55	✓ (3500)	✓ (3000)	✓ (1800)	✓	-	✓
065-040-125	25	100L	3,0	✓ (3500)	✓ (3000)	✓ (1800)	✓ (1500)	✓	-	3,45	✓ (3500)	✓ (3000)	✓ (1800)	✓	-	✓
065-040-160	25	100M	2,2	✓ (3600)	✓ (3000)	✓ (1800)	✓ (1500)	✓	-	2,55	✓ (3600)	✓ (3000)	✓ (1800)	✓	-	✓
065-040-160	25	100L	3,0	✓ (3600)	✓ (3000)	✓ (1800)	✓ (1500)	✓	-	3,45	✓ (3600)	✓ (3000)	✓ (1800)	✓	-	✓
065-040-200	25	100M	2,2	✓ (3600)	✓ (3000)	✓ (1800)	✓ (1500)	✓	-	2,55	✓ (3600)	✓ (3000)	✓ (1800)	✓	-	✓
065-040-200	25	100L	3,0	✓ (3600)	✓ (3000)	✓ (1800)	✓ (1500)	✓	-	3,45	✓ (3600)	✓ (3000)	✓ (1800)	✓	-	✓
065-040-200	25	112M	4,0	✓ (3600)	✓ (3000)	✓ (1800)	✓ (1500)	✓	-	4,6	✓ (3600)	✓ (3000)	✓ (1800)	✓	-	✓
065-040-200	25	132S	5,5	✓ (3600)	✓ (3000)	✓ (1800)	✓ (1500)	✓	-	6,3	✓ (3600)	✓ (3000)	✓ (1800)	✓	-	✓
065-040-250	25	100M	2,2	✓ (3500)	✓ (3000)	✓ (1800)	✓ (1500)	✓	-	2,55	✓ (3500)	✓ (3000)	✓ (1800)	✓	-	✓
065-040-250	25	100L	3,0	✓ (3500)	✓ (3000)	✓ (1800)	✓ (1500)	✓	-	3,45	✓ (3500)	✓ (3000)	✓ (1800)	✓	-	✓
065-040-250	25	112M	4,0	✓ (3500)	✓ (3000)	✓ (1800)	✓ (1500)	✓	-	4,6	✓ (3500)	✓ (3000)	✓ (1800)	✓	-	✓
065-040-250	25	132S	5,5	✓ (3500)	✓ (3000)	✓ (1800)	✓ (1500)	✓	✓	6,3	✓ (3500)	✓ (3000)	✓ (1800)	✓	✓	-
065-040-250	25	132M	7,5	✓ (3500)	✓ (3000)	✓ (1800)	✓ (1500)	✓	✓	8,6	✓ (3500)	✓ (3000)	✓ (1800)	✓	✓	-
065-040-250	25	160M	11	✓ (3500)	✓ (3000)	✓ (1800)	✓ (1500)	✓	✓	12,6	✓ (3500)	✓ (3000)	✓ (1800)	✓	✓	-
065-040-315	35	100L	3,0	✓ (2900)	✓ (2900)	✓ (1800)	✓ (1500)	✓	-	-	-	-	-	-	-	-
065-040-315	35	112M	4,0	✓ (2900)	✓ (2900)	✓ (1800)	✓ (1500)	✓	-	4,6	✓ (2900)	✓ (2900)	✓ (1800)	✓	-	-
065-040-315	35	132S	5,5	✓ (2900)	✓ (2900)	✓ (1800)	✓ (1500)	✓	✓	6,3	✓ (2900)	✓ (2900)	✓ (1800)	✓	✓	-
065-040-315	35	132M	7,5	✓ (2900)	✓ (2900)	✓ (1800)	✓ (1500)	✓	✓	8,6	✓ (2900)	✓ (2900)	✓ (1800)	✓	✓	-
065-040-315	35	160M	11	✓ (2900)	✓ (2900)	✓ (1800)	✓ (1500)	✓	✓	12,6	✓ (2900)	✓ (2900)	✓ (1800)	✓	✓	-
065-040-315	35	180M	18,5	✓ (2900)	✓ (2900)	✓ (1800)	✓ (1500)	✓	✓	21,3	✓ (2900)	✓ (2900)	✓ (1800)	✓	✓	-
065-050-125	25	100M	2,2	✓ (3500)	✓ (3000)	✓ (1800)	✓ (1500)	✓	-	2,55	✓ (3500)	✓ (3000)	✓ (1800)	✓	-	✓
065-050-125	25	100L	3,0	✓ (3500)	✓ (3000)	✓ (1800)	✓ (1500)	✓	-	3,45	✓ (3500)	✓ (3000)	✓ (1800)	✓	-	✓
065-050-160	25	100M	2,2	✓ (3600)	✓ (3000)	✓ (1800)	✓ (1500)	✓	-	2,55	✓ (3600)	✓ (3000)	✓ (1800)	✓	-	✓
065-050-160	25	100L	3,0	✓ (3600)	✓ (3000)	✓ (1800)	✓ (1500)	✓	-	3,45	✓ (3600)	✓ (3000)	✓ (1800)	✓	-	✓
065-050-160	25	112M	4,0	✓ (3600)	✓ (3000)	✓ (1800)	✓ (1500)	✓	-	4,6	✓ (3600)	✓ (3000)	✓ (1800)	✓	-	✓
065-050-160	25	132S	5,5	✓ (3600)	✓ (3000)	✓ (1800)	✓ (1500)	✓	-	6,3	✓ (3600)	✓ (3000)	✓ (1800)	✓	-	✓
065-050-200	25	100M	2,2	✓ (3500)	✓ (3000)	✓ (1800)	✓ (1500)	✓	-	2,55	✓ (3500)	✓ (3000)	✓ (1800)	✓	-	-
065-050-200	25	100L	3,0	✓ (3500)	✓ (3000)	✓ (1800)	✓ (1500)	✓	-	3,45	✓ (3500)	✓ (3000)	✓ (1800)	✓	-	-
065-050-200	25	112M	4,0	✓ (3500)	✓ (3000)	✓ (1800)	✓ (1500)	✓	-	4,6	✓ (3500)	✓ (3000)	✓ (1800)	✓	-	-
065-050-200	25	132S	5,5	✓ (3500)	✓ (3000)	✓ (1800)	✓ (1500)	✓	-	6,3	✓ (3500)	✓ (3000)	✓ (1800)	✓	✓	-
065-050-200	25	132M	7,5	✓ (3500)	✓ (3000)	✓ (1800)	✓ (1500)	✓	-	8,6	✓ (3500)	✓ (3000)	✓ (1800)	✓	✓	-
065-050-200	25	160M	11	✓ (3500)	✓ (3000)	✓ (1800)	✓ (1500)	✓	-	12,6	✓ (3500)	✓ (3000)	✓ (1800)	✓	✓	-

Size 4 poles	Shaft unit	Motor	50 Hz P_N [kW]	Immersion depth < 1000 mm (Maximum speed [rpm])	1000 mm	1250 mm	1500 mm	1750 mm	2000 mm	60 Hz P_N [kW]	Immersion depth < 1000 mm (Maximum speed [rpm])	1000 mm	1250 mm	1500 mm	1750 mm	2000 mm
065-050-250	25	100M	2,2	✓ (3500)	✓ (3000)	✓ (1800)	✓ (1500)	✓	-	-	-	-	-	-	-	-
065-050-250	25	100L	3,0	✓ (3500)	✓ (3000)	✓ (1800)	✓ (1500)	✓	-	3,45	✓ (3500)	✓ (3000)	✓ (1800)	✓	-	-
065-050-250	25	112M	4,0	✓ (3500)	✓ (3000)	✓ (1800)	✓ (1500)	✓	-	4,6	✓ (3500)	✓ (3000)	✓ (1800)	✓	-	-
065-050-250	25	132S	5,5	✓ (3500)	✓ (3000)	✓ (1800)	✓ (1500)	✓	-	6,3	✓ (3500)	✓ (3000)	✓ (1800)	✓	✓	-
065-050-250	25	132M	7,5	✓ (3500)	✓ (3000)	✓ (1800)	✓ (1500)	✓	-	8,6	✓ (3500)	✓ (3000)	✓ (1800)	✓	✓	-
065-050-250	25	160M	11	✓ (3500)	✓ (3000)	✓ (1800)	✓ (1500)	✓	-	12,6	✓ (3500)	✓ (3000)	✓ (1800)	✓	✓	-
065-050-315	35	112M	4,0	✓ (2900)	✓ (2900)	✓ (1800)	✓ (1500)	✓	-	-	-	-	-	-	-	-
065-050-315	35	132S	5,5	✓ (2900)	✓ (2900)	✓ (1800)	✓ (1500)	✓	✓	-	-	-	-	-	-	-
065-050-315	35	132M	7,5	✓ (2900)	✓ (2900)	✓ (1800)	✓ (1500)	✓	✓	8,6	✓ (2900)	✓ (2900)	✓ (1800)	✓	✓	-
065-050-315	35	160M	11	✓ (2900)	✓ (2900)	✓ (1800)	✓ (1500)	✓	✓	12,6	✓ (2900)	✓ (2900)	✓ (1800)	✓	✓	-
065-050-315	35	160L	15	✓ (2900)	✓ (2900)	✓ (1800)	✓ (1500)	✓	✓	17,3	✓ (2900)	✓ (2900)	✓ (1800)	✓	✓	-
065-050-315	35	180M	18,5	✓ (2900)	✓ (2900)	✓ (1800)	✓ (1500)	✓	✓	21,3	✓ (2900)	✓ (2900)	✓ (1800)	✓	✓	-
065-050-315	35	180L	22	✓ (2900)	✓ (2900)	✓ (1800)	✓ (1500)	✓	✓	25,3	✓ (2900)	✓ (2900)	✓ (1800)	✓	✓	-
080-065-125	25	100M	2,2	✓ (3500)	✓ (3000)	✓ (1800)	✓ (1500)	✓	-	2,55	✓ (3500)	✓ (3000)	✓ (1800)	✓	-	✓
080-065-125	25	100L	3,0	✓ (3500)	✓ (3000)	✓ (1800)	✓ (1500)	✓	-	3,45	✓ (3500)	✓ (3000)	✓ (1800)	✓	-	✓
080-065-125	25	112M	4,0	✓ (3500)	✓ (3000)	✓ (1800)	✓ (1500)	✓	-	4,6	✓ (3500)	✓ (3000)	✓ (1800)	✓	-	✓
080-065-160	25	100M	2,2	✓ (3600)	✓ (3000)	✓ (1800)	✓ (1500)	✓	-	2,55	✓ (3600)	✓ (3000)	✓ (1800)	✓	-	✓
080-065-160	25	100L	3,0	✓ (3600)	✓ (3000)	✓ (1800)	✓ (1500)	✓	-	3,45	✓ (3600)	✓ (3000)	✓ (1800)	✓	-	✓
080-065-160	25	112M	4,0	✓ (3600)	✓ (3000)	✓ (1800)	✓ (1500)	✓	-	4,6	✓ (3600)	✓ (3000)	✓ (1800)	✓	-	✓
080-065-160	25	132S	5,5	✓ (3600)	✓ (3000)	✓ (1800)	✓ (1500)	✓	-	6,3	✓ (3600)	✓ (3000)	✓ (1800)	✓	✓	-
080-065-200	25	100M	2,2	✓ (3500)	✓ (3000)	✓ (1800)	✓ (1500)	✓	-	2,55	✓ (3500)	✓ (3000)	✓ (1800)	✓	-	✓
080-065-200	25	100L	3,0	✓ (3500)	✓ (3000)	✓ (1800)	✓ (1500)	✓	-	3,45	✓ (3500)	✓ (3000)	✓ (1800)	✓	-	✓
080-065-200	25	112M	4,0	✓ (3500)	✓ (3000)	✓ (1800)	✓ (1500)	✓	-	4,6	✓ (3500)	✓ (3000)	✓ (1800)	✓	-	✓
080-065-200	25	132S	5,5	✓ (3500)	✓ (3000)	✓ (1800)	✓ (1500)	✓	-	6,3	✓ (3500)	✓ (3000)	✓ (1800)	✓	✓	-
080-065-200	25	132M	7,5	✓ (3500)	✓ (3000)	✓ (1800)	✓ (1500)	✓	-	8,6	✓ (3500)	✓ (3000)	✓ (1800)	✓	✓	-
080-065-200	25	160M	11	✓ (3500)	✓ (3000)	✓ (1800)	✓ (1500)	✓	-	12,6	✓ (3500)	✓ (3000)	✓ (1800)	✓	✓	-
080-065-250	35	100L	3,0	✓ (3500)	✓ (3000)	✓ (1800)	✓ (1500)	✓	-	-	-	-	-	-	-	-
080-065-250	35	112M	4,0	✓ (3500)	✓ (3000)	✓ (1800)	✓ (1500)	✓	-	-	-	-	-	-	-	-
080-065-250	35	132S	5,5	✓ (3500)	✓ (3000)	✓ (1800)	✓ (1500)	✓	✓	6,3	✓ (3500)	✓ (3000)	✓ (1800)	✓	✓	-
080-065-250	35	132M	7,5	✓ (3500)	✓ (3000)	✓ (1800)	✓ (1500)	✓	✓	8,6	✓ (3500)	✓ (3000)	✓ (1800)	✓	✓	-
080-065-250	35	160M	11	✓ (3500)	✓ (3000)	✓ (1800)	✓ (1500)	✓	✓	12,6	✓ (3500)	✓ (3000)	✓ (1800)	✓	✓	-
080-065-250	35	180M	18,5	✓ (3500)	✓ (3000)	✓ (1800)	✓ (1500)	✓	✓	21,3	✓ (3500)	✓ (3000)	✓ (1800)	✓	✓	-
080-065-315	35	132S	5,5	✓ (2900)	✓ (2900)	✓ (1800)	✓ (1800)	✓ (1800)	✓ (1500)	-	-	-	-	-	-	-
080-065-315	35	132M	7,5	✓ (2900)	✓ (2900)	✓ (1800)	✓ (1800)	✓ (1800)	✓ (1500)	8,6	✓ (2900)	✓ (2900)	✓ (1800)	✓ (1800)	✓	-
080-065-315	35	160M	11	✓ (2900)	✓ (2900)	✓ (1800)	✓ (1800)	✓ (1800)	✓ (1500)	12,6	✓ (2900)	✓ (2900)	✓ (1800)	✓ (1800)	✓	-
080-065-315	35	160L	15	✓ (2900)	✓ (2900)	✓ (1800)	✓ (1800)	✓ (1800)	✓ (1500)	17,3	✓ (2900)	✓ (2900)	✓ (1800)	✓ (1800)	✓	-
080-065-315	35	180M	18,5	✓ (2900)	✓ (2900)	✓ (1800)	✓ (1800)	✓ (1800)	✓ (1500)	21,3	✓ (2900)	✓ (2900)	✓ (1800)	✓ (1800)	✓	-
080-065-315	35	180L	22	✓ (2900)	✓ (2900)	✓ (1800)	✓ (1800)	✓ (1800)	✓ (1500)	25,3	✓ (2900)	✓ (2900)	✓ (1800)	✓ (1800)	✓	-
080-065-315	35	200L	30	✓ (2900)	✓ (2900)	✓ (1800)	✓ (1800)	✓ (1800)	✓ (1500)	34,5	✓ (2900)	✓ (2900)	✓ (1800)	✓ (1800)	✓	-
100-080-160	25	100M	2,2	✓ (3500)	✓ (3000)	✓ (1800)	✓ (1500)	✓	-	2,55	✓ (3500)	✓ (3000)	✓ (1800)	✓	-	✓
100-080-160	25	100L	3,0	✓ (3500)	✓ (3000)	✓ (1800)	✓ (1500)	✓	-	3,45	✓ (3500)	✓ (3000)	✓ (1800)	✓	-	✓
100-080-160	25	112M	4,0	✓ (3500)	✓ (3000)	✓ (1800)	✓ (1500)	✓	-	4,6	✓ (3500)	✓ (3000)	✓ (1800)	✓	-	✓
100-080-160	25	132S	5,5	✓ (3500)	✓ (3000)	✓ (1800)	✓ (1500)	✓	✓	6,3	✓ (3500)	✓ (3000)	✓ (1800)	✓	✓	-
100-080-160	25	132M	7,5	✓ (3500)	✓ (3000)	✓ (1800)	✓ (1500)	✓	✓	8,6	✓ (3500)	✓ (3000)	✓ (1800)	✓	✓	-
100-080-200	35	100M	2,2	✓ (3500)	✓ (3000)	✓ (1800)	✓ (1500)	✓	-	-	-	-	-	-	-	-
100-080-200	35	100L	3,0	✓ (3500)	✓ (3000)	✓ (1800)	✓ (1500)	✓	-	-	-	-	-	-	-	-
100-080-200	35	112M	4,0	✓ (3500)	✓ (3000)	✓ (1800)	✓ (1500)	✓	-	4,6	✓ (3500)	✓ (3000)	✓ (1800)	✓	-	✓
100-080-200	35	132S	5,5	✓ (3500)	✓ (3000)	✓ (1800)	✓ (1500)	✓	✓	6,3	✓ (3500)	✓ (3000)	✓ (1800)	✓	✓	-
100-080-200	35	132M	7,5	✓ (3500)	✓ (3000)	✓ (1800)	✓ (1500)	✓	✓	8,6	✓ (3500)	✓ (3000)	✓ (1800)	✓	✓	-
100-080-200	35	160M	11	✓ (3500)	✓ (3000)	✓ (1800)	✓ (1500)	✓	✓	12,6	✓ (3500)	✓ (3000)	✓ (1800)	✓	✓	-
100-080-200	35	160L	15	✓ (3500)	✓ (3000)	✓ (1800)	✓ (1500)	✓	✓	17,3	✓ (3500)	✓ (3000)	✓ (1800)	✓	✓	-
100-080-250	35	112M	4,0	✓ (3500)	✓ (2900)	✓ (1800)	✓ (1500)	✓	-	-	-	-	-	-	-	-
100-080-250	35	132S	5,5	✓ (3500)	✓ (2900)	✓ (1800)	✓ (1500)	✓	✓	-	-	-	-	-	-	-
100-080-250	35	132M	7,5	✓ (3500)	✓ (2900)	✓ (1800)	✓ (1500)	✓	✓	8,6	✓ (3500)	✓ (2900)	✓ (1800)	✓	✓	-
100-080-250	35	160M	11	✓ (3500)	✓ (2900)	✓ (1800)	✓ (1500)	✓	✓	12,6	✓ (3500)	✓ (2900)	✓ (1800)	✓	✓	-
100-080-250	35	160L	15	✓ (3500)	✓ (2900)	✓ (1800)	✓ (1500)	✓	✓	17,3	✓ (3500)	✓ (2900)	✓ (1800)	✓	✓	-
100-080-250	35	180M	18,5	✓ (3500)	✓ (2900)	✓ (1800)	✓ (1500)	✓	✓	21,3	✓ (3500)	✓ (2900)	✓ (1800)	✓	✓	-
100-080-315	35	132M	7,5	✓ (2900)	✓ (2900)	✓ (2000)	✓ (1800)	✓ (1500)	✓ (1500)	-	-	-	-	-	-	-
100-080-315	35	160M	11	✓ (2900)	✓ (2900)	✓ (2000)	✓ (1800)	✓ (1500)	✓ (1500)	-	-	-	-	-	-	-
100-080-315	35	160L	15	✓ (2900)	✓ (2900)	✓ (2000)	✓ (1800)	✓ (1500)	✓ (1500)	17,3	✓ (2900)	✓ (2900)	✓ (2000)	✓ (1800)	✓	-
100-080-315	35	180M	18,5	✓ (2900)	✓ (2900)	✓ (2000)	✓ (1800)	✓ (1500)	✓ (1500)	21,3	✓ (2900)	✓ (2900)	✓ (2000)	✓ (1800)	✓	-
100-080-315	35	180L	22	✓ (2900)	✓ (2900)	✓ (2000)	✓ (1800)	✓ (1500)	✓ (1500)	25,3	✓ (2900)	✓ (2900)	✓ (2000)	✓ (1800)	✓	-
100-080-315	35	200L	30	✓ (2900)	✓ (2900)	✓ (2000)	✓ (1800)	✓ (1500)	✓ (1500)	34,5	✓ (2900)	✓ (2900)	✓ (2000)	✓ (1800)	✓	-

1228.5/08-EN

Size 4 poles	Shaft unit	Motor	50 Hz P_N [kW]	Immersion depth < 1000 mm (Maximum speed [rpm])	1000 mm	1250 mm	1500 mm	1750 mm	2000 mm	60 Hz P_N [kW]	Immersion depth < 1000 mm (Maximum speed [rpm])	1000 mm	1250 mm	1500 mm	1750 mm	2000 mm
100-080-315	35	225S	37	✓ (2900)	✓ (2900)	✓ (2000)	✓ (1800)	✓ (1500)	✓ (1500)	42,5	✓ (2900)	✓ (2900)	✓ (2000)	✓ (1800)	✓	-
100-080-400	55	160L	15	✓ (1800)	✓ (1800)	✓ (1800)	✓ (1800)	✓ (1800)	✓ (1800)	-	-	-	-	-	-	-
100-080-400	55	180M	18,5	✓ (1800)	✓ (1800)	✓ (1800)	✓ (1800)	✓ (1800)	✓ (1800)	-	-	-	-	-	-	-
100-080-400	55	180L	22	✓ (1800)	✓ (1800)	✓ (1800)	✓ (1800)	✓ (1800)	✓ (1800)	25,3	✓ (1800)	✓ (1800)	✓ (1800)	✓ (1800)	✓ (1800)	✓ (1800)
100-080-400	55	200L	30	✓ (1800)	✓ (1800)	✓ (1800)	✓ (1800)	✓ (1800)	✓ (1800)	34,5	✓ (1800)	✓ (1800)	✓ (1800)	✓ (1800)	✓ (1800)	✓ (1800)
100-080-400	55	225S	37	✓ (1800)	✓ (1800)	✓ (1800)	✓ (1800)	✓ (1800)	✓ (1800)	42,5	✓ (1800)	✓ (1800)	✓ (1800)	✓ (1800)	✓ (1800)	✓ (1800)
100-080-400	55	225M	45	✓ (1800)	✓ (1800)	✓ (1800)	✓ (1800)	✓ (1800)	✓ (1800)	52	✓ (1800)	✓ (1800)	✓ (1800)	✓ (1800)	✓ (1800)	✓ (1800)
100-080-400	55	250M	55	✓ (1800)	✓ (1800)	✓ (1800)	✓ (1800)	✓ (1800)	✓ (1800)	63	✓ (1800)	✓ (1800)	✓ (1800)	✓ (1800)	✓ (1800)	✓ (1800)
125-100-160	35	100L	3,0	✓ (3600)	✓ (3000)	✓ (1800)	✓ (1500)	✓	-	-	-	-	-	-	-	-
125-100-160	35	112M	4,0	✓ (3600)	✓ (3000)	✓ (1800)	✓ (1500)	✓	-	4,6	✓ (3600)	✓ (3000)	✓ (1800)	✓	-	✓
125-100-160	35	132S	5,5	✓ (3600)	✓ (3000)	✓ (1800)	✓ (1500)	✓	✓	6,3	✓ (3600)	✓ (3000)	✓ (1800)	✓	✓	-
125-100-160	35	132M	7,5	✓ (3600)	✓ (3000)	✓ (1800)	✓ (1500)	✓	✓	8,6	✓ (3600)	✓ (3000)	✓ (1800)	✓	✓	-
125-100-160	35	160M	11	✓ (3600)	✓ (3000)	✓ (1800)	✓ (1500)	✓	✓	12,6	✓ (3600)	✓ (3000)	✓ (1800)	✓	✓	-
125-100-160	35	160L	15	✓ (3600)	✓ (3000)	✓ (1800)	✓ (1500)	✓	✓	17,3	✓ (3600)	✓ (3000)	✓ (1800)	✓	✓	-
125-100-200	35	112M	4,0	✓ (3500)	✓ (3000)	✓ (1800)	✓ (1500)	✓	-	-	-	-	-	-	-	-
125-100-200	35	132S	5,5	✓ (3500)	✓ (3000)	✓ (1800)	✓ (1500)	✓	✓	6,3	✓ (3500)	✓ (3000)	✓ (1800)	✓	✓	-
125-100-200	35	132M	7,5	✓ (3500)	✓ (3000)	✓ (1800)	✓ (1500)	✓	✓	8,6	✓ (3500)	✓ (3000)	✓ (1800)	✓	✓	-
125-100-200	35	160M	11	✓ (3500)	✓ (3000)	✓ (1800)	✓ (1500)	✓	✓	12,6	✓ (3500)	✓ (3000)	✓ (1800)	✓	✓	-
125-100-200	35	160L	15	✓ (3500)	✓ (3000)	✓ (1800)	✓ (1500)	✓	✓	17,3	✓ (3500)	✓ (3000)	✓ (1800)	✓	✓	-
125-100-250	35	132S	5,5	✓ (3500)	✓ (2100)	✓ (2100)	✓ (1800)	✓ (1800)	✓ (1800)	-	-	-	-	-	-	-
125-100-250	35	132M	7,5	✓ (3500)	✓ (2100)	✓ (2100)	✓ (1800)	✓ (1800)	✓ (1800)	-	-	-	-	-	-	-
125-100-250	35	160M	11	✓ (3500)	✓ (2100)	✓ (2100)	✓ (1800)	✓ (1800)	✓ (1800)	12,6	✓ (3500)	✓ (2100)	✓ (2100)	✓ (1800)	✓	-
125-100-250	35	160L	15	✓ (3500)	✓ (2100)	✓ (2100)	✓ (1800)	✓ (1800)	✓ (1800)	17,3	✓ (3500)	✓ (2100)	✓ (2100)	✓ (1800)	✓	-
125-100-250	35	180M	18,5	✓ (3500)	✓ (2100)	✓ (2100)	✓ (1800)	✓ (1800)	✓ (1800)	21,3	✓ (3500)	✓ (2100)	✓ (2100)	✓ (1800)	✓	-
125-100-250	35	180L	22	✓ (3500)	✓ (2100)	✓ (2100)	✓ (1800)	✓ (1800)	✓ (1800)	25,3	✓ (3500)	✓ (2100)	✓ (2100)	✓ (1800)	✓	-
125-100-315	35	160M	11	✓ (2900)	✓ (2100)	✓ (2100)	✓ (1800)	✓ (1800)	✓ (1800)	-	-	-	-	-	-	-
125-100-315	35	160L	15	✓ (2900)	✓ (2100)	✓ (2100)	✓ (1800)	✓ (1800)	✓ (1800)	-	-	-	-	-	-	-
125-100-315	35	180M	18,5	✓ (2900)	✓ (2100)	✓ (2100)	✓ (1800)	✓ (1800)	✓ (1800)	21,3	✓ (2900)	✓ (2100)	✓ (2100)	✓ (1800)	✓	-
125-100-315	35	180L	22	✓ (2900)	✓ (2100)	✓ (2100)	✓ (1800)	✓ (1800)	✓ (1800)	25,3	✓ (2900)	✓ (2100)	✓ (2100)	✓ (1800)	✓	-
125-100-315	35	200L	30	✓ (2900)	✓ (2100)	✓ (2100)	✓ (1800)	✓ (1800)	✓ (1800)	34,5	✓ (2900)	✓ (2100)	✓ (2100)	✓ (1800)	✓	-
125-100-315	35	225S	37	✓ (2900)	✓ (2100)	✓ (2100)	✓ (1800)	✓ (1800)	✓ (1800)	42,5	✓ (2900)	✓ (2100)	✓ (2100)	✓ (1800)	✓	-
125-100-315	35	225M	45	✓ (2900)	✓ (2100)	✓ (2100)	✓ (1800)	✓ (1800)	✓ (1800)	52	✓ (2900)	✓ (2100)	✓ (2100)	✓ (1800)	✓	
125-100-400	55	180L	22	✓ (1800)	✓ (1800)	✓ (1800)	✓ (1800)	✓ (1800)	✓ (1800)	-	-	-	-	-	-	-
125-100-400	55	200L	30	✓ (1800)	✓ (1800)	✓ (1800)	✓ (1800)	✓ (1800)	✓ (1800)	-	-	-	-	-	-	-
125-100-400	55	225S	37	✓ (1800)	✓ (1800)	✓ (1800)	✓ (1800)	✓ (1800)	✓ (1800)	42,5	✓ (1800)	✓ (1800)	✓ (1800)	✓ (1800)	✓ (1800)	✓ (1800)
125-100-400	55	225M	45	✓ (1800)	✓ (1800)	✓ (1800)	✓ (1800)	✓ (1800)	✓ (1800)	52	✓ (1800)	✓ (1800)	✓ (1800)	✓ (1800)	✓ (1800)	✓ (1800)
125-100-400	55	250M	55	✓ (1800)	✓ (1800)	✓ (1800)	✓ (1800)	✓ (1800)	✓ (1800)	63	✓ (1800)	✓ (1800)	✓ (1800)	✓ (1800)	✓ (1800)	✓ (1800)
125-100-400	55	280S	75	✓ (1800)	✓ (1800)	✓ (1800)	✓ (1800)	✓ (1800)	✓ (1800)	86	✓ (1800)	✓ (1800)	✓ (1800)	✓ (1800)	✓ (1800)	✓ (1800)
150-125-200	35	132M	7,5	✓ (3500)	✓ (2100)	✓ (2100)	✓ (1800)	✓ (1500)	✓ (1500)	-	-	-	-	-	-	-
150-125-200	35	160M	11	✓ (3500)	✓ (2100)	✓ (2100)	✓ (1800)	✓ (1500)	✓ (1500)	12,6	✓ (3500)	✓ (2100)	✓ (2100)	✓ (1800)	✓	-
150-125-200	35	160	15	✓ (3500)	✓ (2100)	✓ (2100)	✓ (1800)	✓ (1500)	✓ (1500)	17,3	✓ (3500)	✓ (2100)	✓ (2100)	✓ (1800)	✓	-
150-125-200	35	180M	18,5	✓ (3500)	✓ (2100)	✓ (2100)	✓ (1800)	✓ (1500)	✓ (1500)	21,3	✓ (3500)	✓ (2100)	✓ (2100)	✓ (1800)	✓	-
150-125-200	35	180L	22	✓ (3500)	✓ (2100)	✓ (2100)	✓ (1800)	✓ (1500)	✓ (1500)	25,3	✓ (3500)	✓ (2100)	✓ (2100)	✓ (1800)	✓	-
150-125-250	35	160M	11	✓ (2000)	✓ (2000)	✓ (2000)	✓ (1800)	✓ (1500)	✓ (1500)	-	-	-	-	-	-	-
150-125-250	35	160L	15	✓ (2000)	✓ (2000)	✓ (2000)	✓ (1800)	✓ (1500)	✓ (1500)	17,3	✓ (2000)	✓ (2000)	✓ (2000)	✓ (1800)	✓	-
150-125-250	35	180M	18,5	✓ (2000)	✓ (2000)	✓ (2000)	✓ (1800)	✓ (1500)	✓ (1500)	21,3	✓ (2000)	✓ (2000)	✓ (2000)	✓ (1800)	✓	-
150-125-250	35	180L	22	✓ (2000)	✓ (2000)	✓ (2000)	✓ (1800)	✓ (1500)	✓ (1500)	25,3	✓ (2000)	✓ (2000)	✓ (2000)	✓ (1800)	✓	-
150-125-250	35	200L	30	✓ (2000)	✓ (2000)	✓ (2000)	✓ (1800)	✓ (1500)	✓ (1500)	34,5	✓ (2000)	✓ (2000)	✓ (2000)	✓ (1800)	✓	-
150-125-250	35	225S	37	✓ (2000)	✓ (2000)	✓ (2000)	✓ (1800)	✓ (1500)	✓ (1500)	42,5	✓ (2000)	✓ (2000)	✓ (2000)	✓ (1800)	✓	-
150-125-315	55	180M	18,5	✓ (2300)	✓ (2100)	✓ (2100)	✓ (2100)	✓ (1800)	✓ (1800)	-	-	-	-	-	-	-
150-125-315	55	180L	22	✓ (2300)	✓ (2100)	✓ (2100)	✓ (2100)	✓ (1800)	✓ (1800)	-	-	-	-	-	-	-
150-125-315	55	200L	30	✓ (2300)	✓ (2100)	✓ (2100)	✓ (2100)	✓ (1800)	✓ (1800)	34,5	✓ (2300)	✓ (2100)	✓ (2100)	✓ (2100)	✓ (1800)	✓ (1800)
150-125-315	55	225S	37	✓ (2300)	✓ (2100)	✓ (2100)	✓ (2100)	✓ (1800)	✓ (1800)	42,5	✓ (2300)	✓ (2100)	✓ (2100)	✓ (2100)	✓ (1800)	✓ (1800)
150-125-315	55	225M	45	✓ (2300)	✓ (2100)	✓ (2100)	✓ (2100)	✓ (1800)	✓ (1800)	52	✓ (2300)	✓ (2100)	✓ (2100)	✓ (2100)	✓ (1800)	✓ (1800)
150-125-315	55	250M	55	✓ (2300)	✓ (2100)	✓ (2100)	✓ (2100)	✓ (1800)	✓ (1800)	63	✓ (2300)	✓ (2100)	✓ (2100)	✓ (2100)	✓ (1800)	✓ (1800)
150-125-315	55	280S	75	✓ (2300)	✓ (2100)	✓ (2100)	✓ (2100)	✓ (1800)	✓ (1800)	86	✓ (2300)	✓ (2100)	✓ (2100)	✓ (2100)	✓ (1800)	✓ (1800)
150-125-400	55	200L	30	✓ (1800)	✓ (1800)	✓ (1800)	✓ (1800)	✓ (1800)	✓ (1800)	-	-	-	-	-	-	-
150-125-400	55	225S	37	✓ (1800)	✓ (1800)	✓ (1800)	✓ (1800)	✓ (1800)	✓ (1800)	-	-	-	-	-	-	-
150-125-400	55	225M	45	✓ (1800)	✓ (1800)	✓ (1800)	✓ (1800)	✓ (1800)	✓ (1800)	52	✓ (1800)	✓ (1800)	✓ (1800)	✓ (1800)	✓ (1800)	✓ (1800)
150-125-400	55	250M	55	✓ (1800)	✓ (1800)	✓ (1800)	✓ (1800)	✓ (1800)	✓ (1800)	63	✓ (1800)	✓ (1800)	✓ (1800)	✓ (1800)	✓ (1800)	✓ (1800)
150-125-400	55	280S	75	✓ (1800)	✓ (1800)	✓ (1800)	✓ (1800)	✓ (1800)	✓ (1800)	86	✓ (1800)	✓ (1800)	✓ (1800)	✓ (1800)	✓ (1800)	✓ (1800)
150-125-400	55	280M	90	✓ (1800)	✓ (1800)	✓ (1800)	✓ (1800)	✓ (1800)	✓ (1800)	104	✓ (1800)	✓ (1800)	✓ (1800)	✓ (1800)	✓ (1800)	✓ (1800)

Size 4 poles	Shaft unit	Motor	50 Hz							60 Hz						
			P_N	Immersion depth						P_N	Immersion depth					
				< 1000 mm	1000 mm	1250 mm	1500 mm	1750 mm	2000 mm		< 1000 mm	1000 mm	1250 mm	1500 mm	1750 mm	2000 mm
			[kW]	(Maximum speed [rpm])						[kW]	(Maximum speed [rpm])					
200-150-200	35	160M	11	✓ (1800)	✓ (1800)	✓ (1800)	✓ (1800)	✓ (1500)	✓ (1500)	-	-	-	-	-	-	-
200-150-200	35	160L	15	✓ (1800)	✓ (1800)	✓ (1800)	✓ (1800)	✓ (1500)	✓ (1500)	17,3	✓ (1800)	✓ (1800)	✓ (1800)	✓ (1800)	✓	-
200-150-200	35	180M	18,5	✓ (1800)	✓ (1800)	✓ (1800)	✓ (1800)	✓ (1500)	✓ (1500)	21,3	✓ (1800)	✓ (1800)	✓ (1800)	✓ (1800)	✓	-
200-150-200	35	180L	22	✓ (1800)	✓ (1800)	✓ (1800)	✓ (1800)	✓ (1500)	✓ (1500)	25,3	✓ (1800)	✓ (1800)	✓ (1800)	✓ (1800)	✓	-
200-150-200	35	200L	30	✓ (1800)	✓ (1800)	✓ (1800)	✓ (1800)	✓ (1500)	✓ (1500)	34,5	✓ (1800)	✓ (1800)	✓ (1800)	✓ (1800)	✓	-
200-150-250	35	160L	15	✓ (1800)	✓ (1800)	✓ (1800)	✓ (1800)	✓ (1500)	✓ (1500)	-	-	-	-	-	-	-
200-150-250	35	180M	18,5	✓ (1800)	✓ (1800)	✓ (1800)	✓ (1800)	✓ (1500)	✓ (1500)	21,3	✓ (1800)	✓ (1800)	✓ (1800)	✓ (1800)	✓	-
200-150-250	35	180L	22	✓ (1800)	✓ (1800)	✓ (1800)	✓ (1800)	✓ (1500)	✓ (1500)	25,3	✓ (1800)	✓ (1800)	✓ (1800)	✓ (1800)	✓	-
200-150-250	35	200L	30	✓ (1800)	✓ (1800)	✓ (1800)	✓ (1800)	✓ (1500)	✓ (1500)	34,5	✓ (1800)	✓ (1800)	✓ (1800)	✓ (1800)	✓	-
200-150-250	35	225S	37	✓ (1800)	✓ (1800)	✓ (1800)	✓ (1800)	✓ (1500)	✓ (1500)	42,5	✓ (1800)	✓ (1800)	✓ (1800)	✓ (1800)	✓	-
200-150-250	35	225M	45	✓ (1800)	✓ (1800)	✓ (1800)	✓ (1800)	✓ (1500)	✓ (1500)	52	✓ (1800)	✓ (1800)	✓ (1800)	✓ (1800)	✓	-
200-150-250	35	250M	55	✓ (1800)	✓ (1800)	✓ (1800)	✓ (1800)	✓ (1500)	✓ (1500)	63	✓ (1800)	✓ (1800)	✓ (1800)	✓ (1800)	✓	-
200-150-315	55	180L	22	✓ (1800)	✓ (1800)	✓ (1800)	✓ (1800)	✓ (1800)	✓ (1800)	-	-	-	-	-	-	-
200-150-315	55	200L	30	✓ (1800)	✓ (1800)	✓ (1800)	✓ (1800)	✓ (1800)	✓ (1800)	-	-	-	-	-	-	-
200-150-315	55	225S	37	✓ (1800)	✓ (1800)	✓ (1800)	✓ (1800)	✓ (1800)	✓ (1800)	42,5	✓ (1800)	✓ (1800)	✓ (1800)	✓ (1800)	✓ (1800)	✓ (1800)
200-150-315	55	225M	45	✓ (1800)	✓ (1800)	✓ (1800)	✓ (1800)	✓ (1800)	✓ (1800)	52	✓ (1800)	✓ (1800)	✓ (1800)	✓ (1800)	✓ (1800)	✓ (1800)
200-150-315	55	250M	55	✓ (1800)	✓ (1800)	✓ (1800)	✓ (1800)	✓ (1800)	✓ (1800)	63	✓ (1800)	✓ (1800)	✓ (1800)	✓ (1800)	✓ (1800)	✓ (1800)
200-150-315	55	280S	75	✓ (1800)	✓ (1800)	✓ (1800)	✓ (1800)	✓ (1800)	✓ (1800)	86	✓ (1800)	✓ (1800)	✓ (1800)	✓ (1800)	✓ (1800)	✓ (1800)
200-150-315	55	280M	90	✓ (1800)	✓ (1800)	✓ (1800)	✓ (1800)	✓ (1800)	✓ (1800)	104	✓ (1800)	✓ (1800)	✓ (1800)	✓ (1800)	✓ (1800)	✓ (1800)
200-150-400	55	225S	37	✓ (1800)	✓ (1800)	✓ (1800)	✓ (1800)	✓ (1800)	✓ (1800)	-	-	-	-	-	-	-
200-150-400	55	225M	45	✓ (1800)	✓ (1800)	✓ (1800)	✓ (1800)	✓ (1800)	✓ (1800)	-	-	-	-	-	-	-
200-150-400	55	250M	55	✓ (1800)	✓ (1800)	✓ (1800)	✓ (1800)	✓ (1800)	✓ (1800)	-	-	-	-	-	-	-
200-150-400	55	280S	75	✓ (1800)	✓ (1800)	✓ (1800)	✓ (1800)	✓ (1800)	✓ (1800)	86	✓ (1800)	✓ (1800)	✓ (1800)	✓ (1800)	✓ (1800)	✓ (1800)
200-150-400	55	280M	90	✓ (1800)	✓ (1800)	✓ (1800)	✓ (1800)	✓ (1800)	✓ (1800)	104	✓ (1800)	✓ (1800)	✓ (1800)	✓ (1800)	✓ (1800)	✓ (1800)

1228.5/08-EN

Selection charts

Etanorm V (fixed speed version), n = 2900 rpm

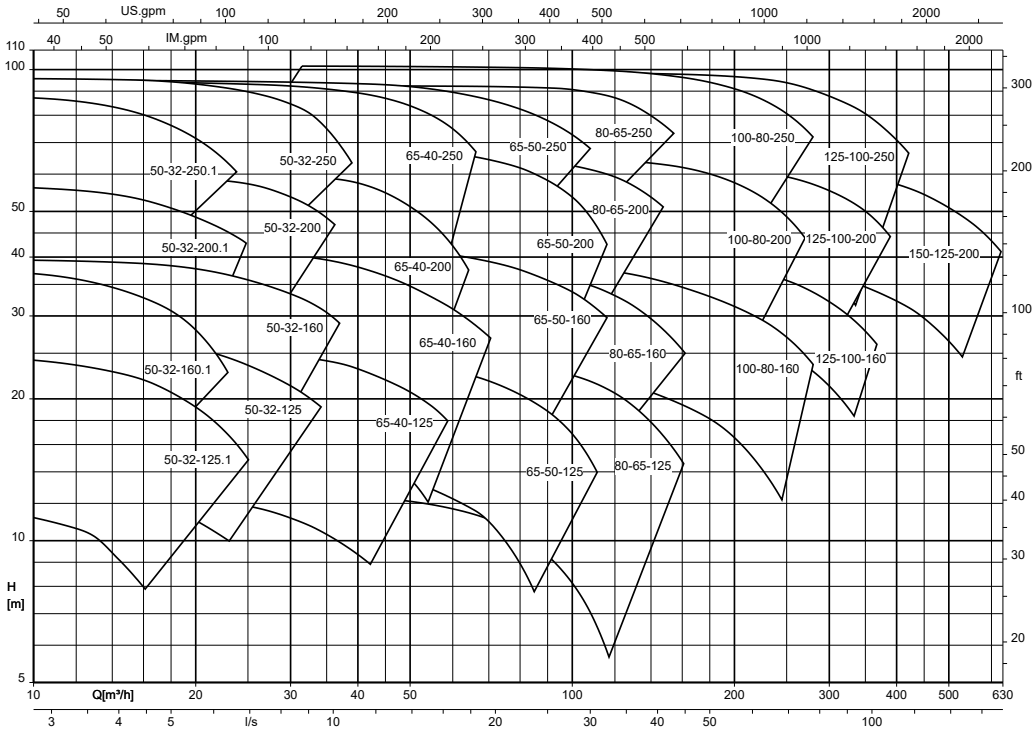

Etanorm V (fixed speed version), n = 1450 rpm

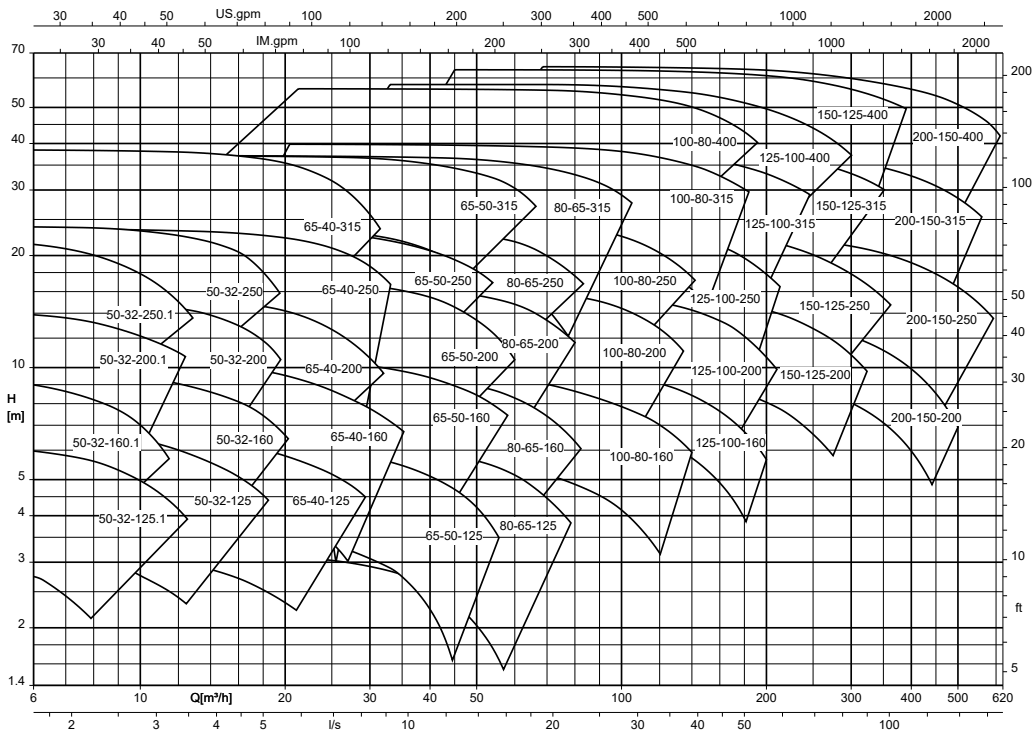

1228.5/08-EN

Etanorm V (fixed speed version), n = 3500 rpm

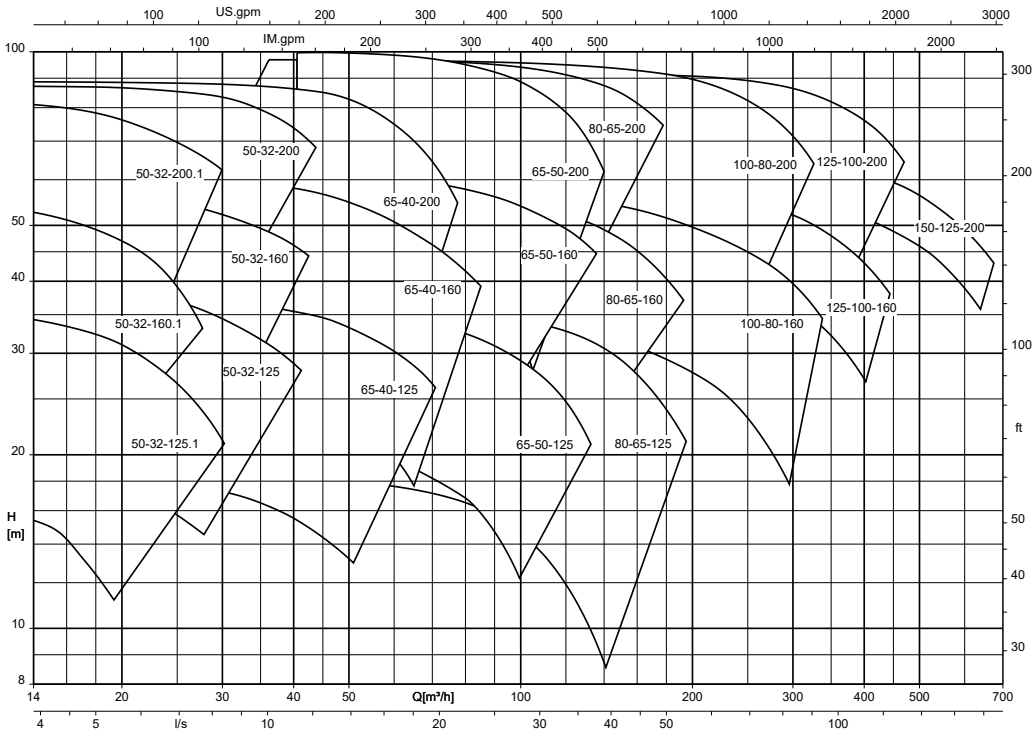

Etanorm V (fixed speed version), n = 1750 rpm

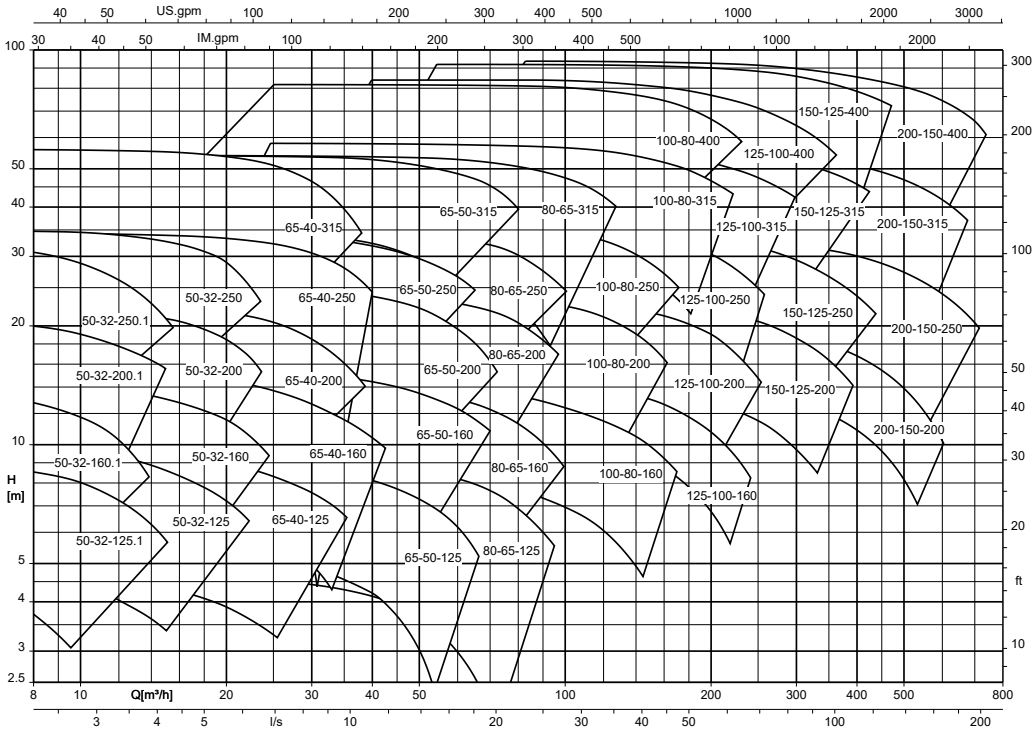

1228.5/08-EN

Characteristic curves

Related documents

Table 22: Information/documents

Document	Reference number
Characteristic curves booklet (50 Hz) Fixed speed version	1311.45
Characteristic curves booklet (60 Hz) Fixed speed version	1311.46

Dimensions

Pump dimensions

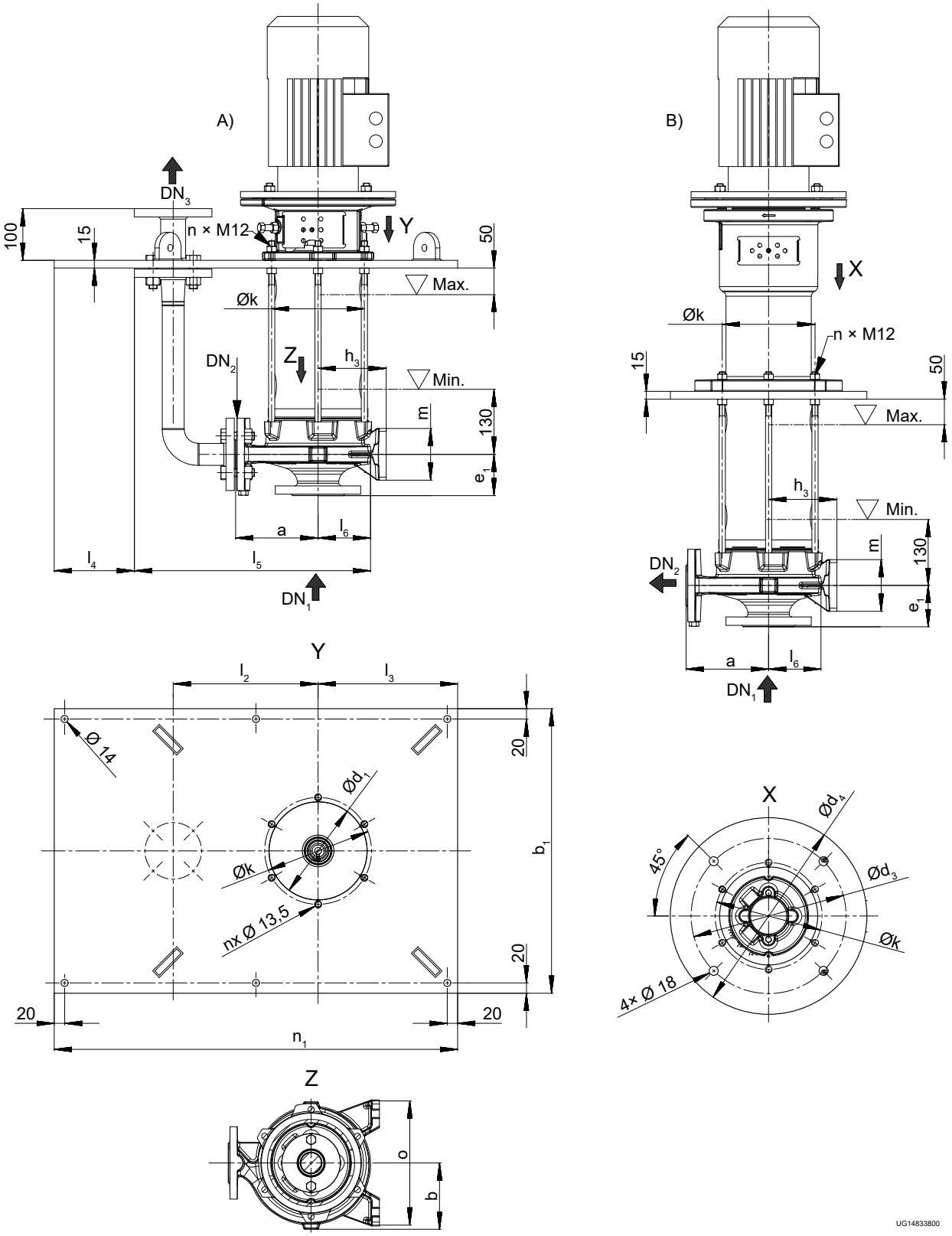

Fig. 1: Dimensions [mm]
A) Design W
B) Design D

Flanges of DN 65 come with 4 bolt holes; all other sizes come with 8 bolt holes.

1228.5/08-EN

Table 23: Dimensions [mm]

Size	Shaft unit	DN_1	DN_2	DN_3	a	b	b_1	d_1	d_3	d_4	e_1	h_3	k	l_2	l_3	l_4	l_5	l_6	m	n	n_1	o
050-032-125.1[12)]	WS_25	50	32	40	140	116	550	190	300	380	80	112	207	280	270	155	455	100	100	6	780	190
050-032-160.1[12)]	WS_25	50	32	40	160	116	550	190	300	380	80	132	207	280	270	155	466	111	100	6	780	240
050-032-200.1[12)]	WS_25	50	32	40	180	142	550	190	300	380	80	160	207	280	270	155	491	136	100	6	780	240
050-032-250.1[12)]	WS_25	50	32	40	225	168	550	190	300	380	100	180	207	280	270	155	521	166	125	6	780	320
050-032-125[12)]	WS_25	50	32	40	140	115	550	190	300	380	80	112	207	280	270	155	455	100	100	6	780	190
050-032-160[12)]	WS_25	50	32	40	160	118	550	190	300	380	80	132	207	280	270	155	470	115	100	6	780	240
050-032-200[12)]	WS_25	50	32	40	180	142	550	190	300	380	80	160	207	280	270	155	492	137	100	6	780	240
050-032-250[12)]	WS_25	50	32	40	225	169	550	190	300	380	100	180	207	280	270	155	521	166	125	6	780	320
065-040-125[12)]	WS_25	65	40	50	140	117	550	190	300	380	80	112	207	270	270	157	460	107	100	6	780	210
065-040-160[12)]	WS_25	65	40	50	160	119	550	190	300	380	80	132	207	290	270	137	492	119	100	6	780	240
065-040-200[12)]	WS_25	65	40	50	180	142	550	190	300	380	100	160	207	310	270	117	534	141	100	6	780	265
065-040-250[12)]	WS_25	65	40	50	225	169	550	190	300	380	100	180	207	295	270	132	544	166	125	6	780	320
065-040-315[12)]	WS_35	65	40	50	250	207	550	241	300	380	125	225	260	320	270	107	607	204	125	6	780	345
065-050-125[12)]	WS_25	65	50	65	160	117	550	190	300	380	100	132	207	310	270	107	515	112	100	6	780	240
065-050-160[12)]	WS_25	65	50	65	180	128	550	190	300	380	100	160	207	330	270	87	556	133	100	6	780	265
065-050-200[12)]	WS_25	65	50	65	200	144	550	190	300	380	100	160	207	290	270	127	533	150	100	6	780	265
065-050-250[12)]	WS_25	65	50	65	225	170	550	190	300	380	100	180	207	315	270	102	580	172	125	6	780	320
065-050-315[12)]	WS_35	65	50	65	280	207	550	241	350	380	125	225	260	370	270	47	666	203	125	6	780	345
080-065-125[12)]	WS_25	80	65	80	180	117	550	190	300	380	100	160	207	350	270	60	577	127	125	6	780	280
080-065-160[12)]	WS_25	80	65	80	200	132	550	190	300	380	100	160	207	370	270	40	610	140	125	6	780	280
080-065-200[12)]	WS_25	80	65	80	225	155	550	190	300	380	100	180	207	335	270	75	596	161	125	6	780	320
080-065-250[12)]	WS_35	80	65	80	250	199	550	241	350	380	100	200	260	360	270	50	645	185	160	8	780	360
080-065-315[12)]	WS_35	80	65	80	280	209	550	241	350	380	125	225	260	390	270	49	674	213	160	8	780	400
100-080-160[12)]	WS_25	100	80	100	225	138	550	190	300	380	125	180	207	355	270	145	618	153	125	6	880	320
100-080-200[12)]	WS_35	100	80	100	250	159	550	241	350	380	125	180	260	380	270	120	660	170	125	8	880	345
100-080-250[12)]	WS_35	100	80	100	280	183	550	241	350	380	125	200	260	410	270	90	712	192	160	8	880	400
100-080-315[12)]	WS_35	100	80	100	315	218	550	241	350	380	125	250	260	445	270	55	782	227	160	8	880	400
100-080-400[12)13)]	WS_55	100	80	100	355	257	700	241	420	445	125	280	260	485	355	200	-	-	160	8	1150	435
125-100-160[12)]	WS_35	125	100	100	280	178	550	241	350	380	125	200	260	450	270	68	741	199	160	8	880	360
125-100-200[12)]	WS_35	125	100	125	280	173	550	241	350	380	125	200	260	450	270	68	731	189	160	8	880	360
125-100-250[12)]	WS_35	125	100	125	280	188	550	241	350	380	140	225	260	450	270	68	742	200	160	8	880	400
125-100-315[12)]	WS_35	125	100	125	315	225	550	241	350	380	140	250	260	485	260	43	814	237	160	8	880	400
125-100-400[12)13)]	WS_55	125	100	125	355	255	700	241	420	445	140	280	260	525	355	145	-	-	200	8	1150	500
150-125-200[12)]	WS_35	150	125	150	315	189	600	241	350	380	140	250	260	520	330	157	875	212	160	8	1150	400
150-125-250[12)]	WS_35	150	125	150	355	226	600	241	350	380	140	250	260	560	330	117	951	248	160	8	1150	400
150-125-315[12)13)]	WS_55	150	125	150	355	243	700	241	420	445	140	280	260	560	355	92	-	-	200	8	1150	500
150-125-400[12)13)]	WS_55	150	125	150	400	277	700	241	420	445	140	315	260	605	355	47	-	-	200	8	1150	500
200-150-200[12)]	WS_35	200	150	200	400	240	600	241	350	380	160	280	260	645	330	43	1054	277	200	8	1150	550
200-150-250[12)]	WS_35	200	150	200	400	230	600	241	350	380	160	280	260	645	330	43	1039	262	200	8	1150	500
200-150-315[12)13)]	WS_55	200	150	200	400	255	700	241	420	445	160	280	260	645	330	43	-	-	200	8	1150	550
200-150-400[12)13)]	WS_55	200	150	200	450	289	700	241	420	445	160	315	260	690	345	43	-	-	200	8	1210	550

12 Pump casings made of stainless steel are equipped with pump feet.
13 Pump casings made of grey cast iron, shaft unit 55, are equipped with pump feet.

Motor dimensions

Design D

Table 24: The dimensions used refer to a standard motor. For the exact motor-related dimensions refer to the general arrangement drawing.

Illustration	Motor	h	h_1			h_2		
		[mm]	[mm]			[mm]		
			WS_25	WS_35	WS_55	WS_25	WS_35	WS_55
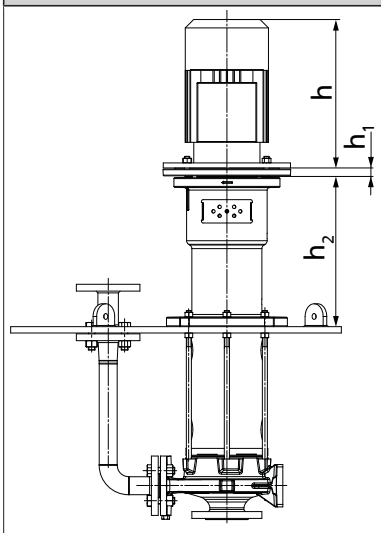	100	382	0	0	-	354	354	-
	112	371	0	0	-	354	354	-
	132	441	20	20	-	354	354	-
	160	552	50	50	0	354	354	631
	180	610	50	50	0	354	354	631
	200	669	50	50	0	354	354	631
	225	755	-	80	30	-	354	631
	250	817	-	0	30	-	434	631
	280	980	-	0	30	-	434	631

Design W

Table 25: The dimensions used refer to a standard motor. For the exact motor-related dimensions refer to the general arrangement drawing.

Illustration	Motor	h	h_2		
		[mm]	[mm]		
			WS_25	WS_35	WS_55
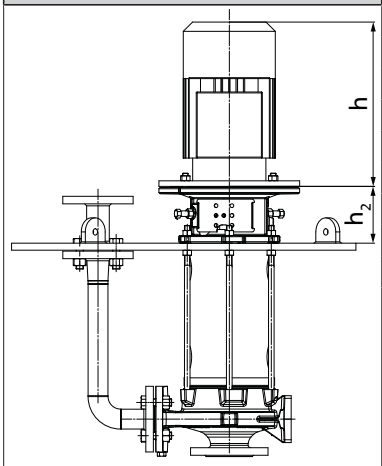	100	382	98	95	-
	112	371	98	95	-
	132	441	121	118	-
	160	552	154	151	151
	180	610	154	151	151
	200	669	154	151	151
	225	755	-	182	182
	250	817	-	194	194
	280	980	-	194	194

1228.5/08-EN

Dimensions of immersion depths

Design D

Table 26: Overview of immersion depths [mm] per shaft unit

Shaft unit	Immersion depth
WS_25	375, 425, 504
WS_35	398, 448, 529
WS_55	535

Design W

Table 27: Overview of immersion depths [mm] per shaft unit

Shaft unit	Immersion depth
WS_25	375, 425, 504, 750, 1000, 1250, 1500, 1750, 2000
WS_35	398, 448, 529, 750, 1000, 1250, 1500, 1750, 2000
WS_55	535, 750, 1000, 1250, 1500, 1750, 2000

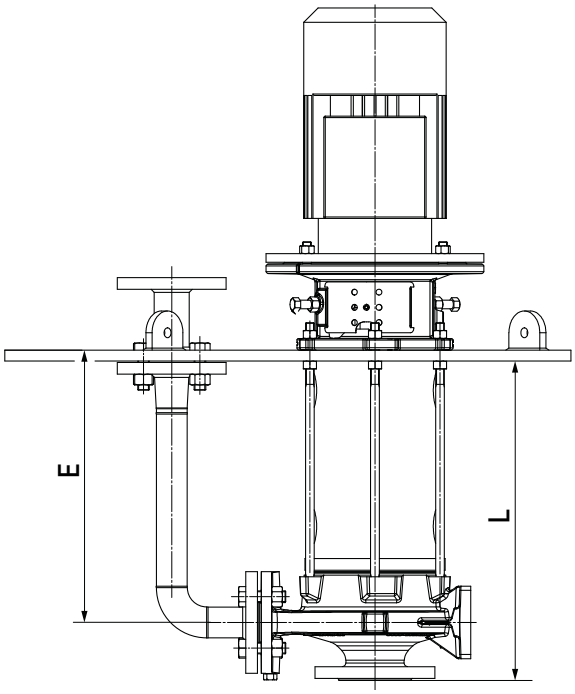

Fig. 2: Dimension of the immersion depth

Table 28: Overview of dimension L [mm] depending on the immersion depth (E) [mm]

Size	Bearing bracket	E (immersion depth)												
		375	398	425	448	504	529	535	750	1000	1250	1500	1750	2000
		L												
050-032-125.1	WS_25	440	-	490	-	569	-	-	815	1065	1315	1565	1815	2065
050-032-160.1	WS_25	440	-	490	-	569	-	-	815	1065	1315	1565	1815	2065
050-032-200.1	WS_25	440	-	490	-	569	-	-	815	1065	1315	1565	1815	2065
050-032-250.1	WS_25	460	-	510	-	589	-	-	835	1085	1335	1585	1835	2085
050-032-125	WS_25	440	-	490	-	569	-	-	815	1065	1315	1565	1815	2065
050-032-160	WS_25	440	-	490	-	569	-	-	815	1065	1315	1565	1815	2065
050-032-200	WS_25	440	-	490	-	569	-	-	815	1065	1315	1565	1815	2065
050-032-250	WS_25	460	-	510	-	589	-	-	835	1085	1335	1585	1835	2085
065-040-125	WS_25	440	-	490	-	569	-	-	815	1065	1315	1565	1815	2065
065-040-160	WS_25	440	-	490	-	569	-	-	815	1065	1315	1565	1815	2065
065-040-200	WS_25	460	-	510	-	589	-	-	835	1085	1335	1585	1835	2085
065-040-250	WS_25	460	-	510	-	589	-	-	835	1085	1335	1585	1835	2085
065-040-315	WS_35	-	508	-	558	-	639	-	860	1110	1360	1610	1860	2110
065-050-125	WS_25	460	-	510	-	589	-	-	835	1085	1335	1585	1835	2085

Size	Bearing bracket	E (immersion depth)												
		375	398	425	448	504	529	535	750	1000	1250	1500	1750	2000
		L												
065-050-160	WS_25	460	-	510	-	589	-	-	835	1085	1335	1585	1835	2085
065-050-200	WS_25	460	-	510	-	589	-	-	835	1085	1335	1585	1835	2085
065-050-250	WS_25	460	-	510	-	589	-	-	835	1085	1335	1585	1835	2085
065-050-315	WS_35	-	508	-	558	-	639	-	860	1110	1360	1610	1860	2110
080-065-125	WS_25	460	-	510	-	589	-	-	835	1085	1335	1585	1835	2085
080-065-160	WS_25	460	-	510	-	589	-	-	835	1085	1335	1585	1835	2085
080-065-200	WS_25	460	-	510	-	589	-	-	835	1085	1335	1585	1835	2085
080-065-250	WS_35	-	483	-	533	-	614	-	835	1085	1335	1585	1835	2085
080-065-315	WS_35	-	508	-	558	-	639	-	860	1110	1360	1610	1860	2110
100-080-160	WS_25	485	-	535	-	614	-	-	860	1110	1360	1610	1860	2110
100-080-200	WS_35	-	508	-	558	-	639	-	860	1110	1360	1610	1860	2110
100-080-250	WS_35	-	508	-	558	-	639	-	860	1110	1360	1610	1860	2110
100-080-315	WS_35	-	508	-	558	-	639	-	860	1110	1360	1610	1860	2110
100-080-400	WS_55	-	-	-	-	-	-	645	860	1110	1360	1610	1860	2110
125-100-160	WS_35	-	508	-	558	-	639	-	860	1110	1360	1610	1860	2110
125-100-200	WS_35	-	508	-	558	-	639	-	860	1110	1360	1610	1860	2110
125-100-250	WS_35	-	523	-	573	-	654	-	875	1125	1375	1625	1875	2125
125-100-315	WS_35	-	523	-	573	-	654	-	875	1125	1375	1625	1875	2125
125-100-400	WS_55	-	-	-	-	-	-	660	875	1125	1375	1625	1875	2125
150-125-200	WS_35	-	523	-	573	-	654	-	875	1125	1375	1625	1875	2125
150-125-250	WS_35	-	523	-	573	-	654	-	875	1125	1375	1625	1875	2125
150-125-315	WS_55	-	-	-	-	-	-	660	875	1125	1375	1625	1875	2125
150-125-400	WS_55	-	-	-	-	-	-	660	875	1125	1375	1625	1875	2125
200-150-200	WS_35	-	543	-	593	-	674	-	895	1145	1395	1645	1895	2145
200-150-250	WS_35	-	543	-	593	-	674	-	895	1145	1395	1645	1895	2145
200-150-315	WS_55	-	-	-	-	-	-	680	895	1145	1395	1645	1895	2145
200-150-400	WS_55	-	-	-	-	-	-	680	895	1145	1395	1645	1895	2145

Dimensions: distance from the floor

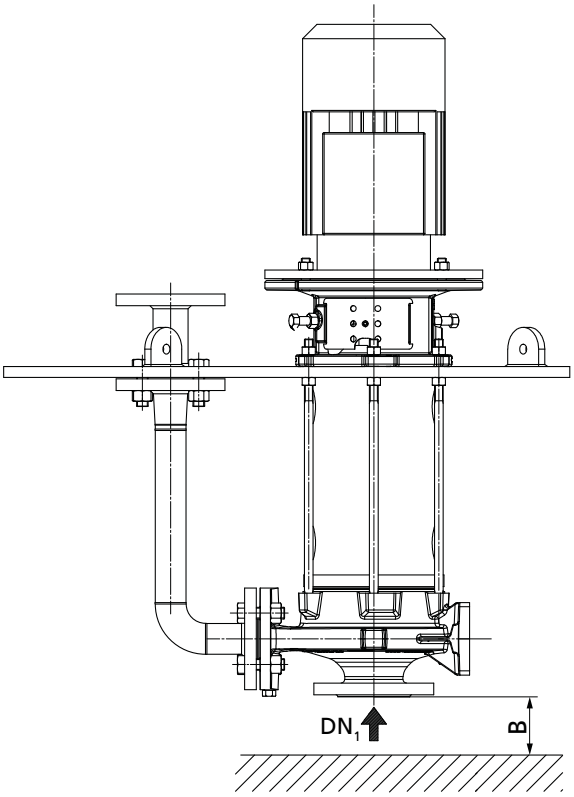

Fig. 3: Distance from the floor

Table 29: Distance from the floor in [mm]

DN_1	B
50	≥80
65	≥80
80	≥100
100	≥100
125	≥100
150	≥150
200	≥150

1228.5/08-EN

Flange variant

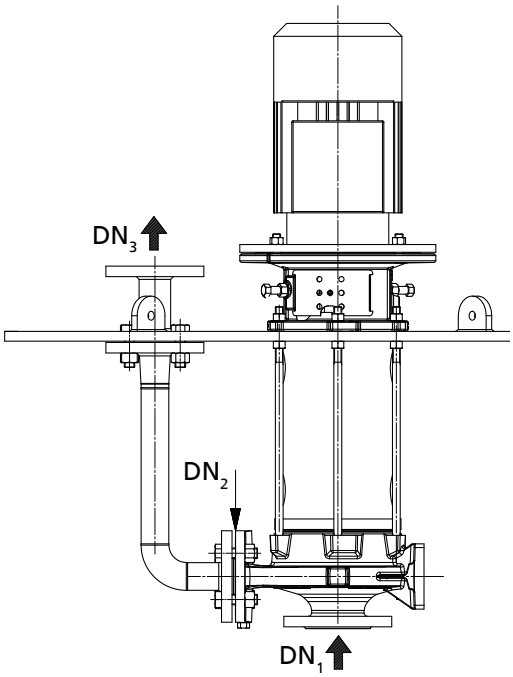

Fig. 4: Flange designation

Table 30: Flange designs

	Suction side	Discharge side	
	DN_1	DN_2	DN_3
Standard	DIN EN 1092-2 (material variant G) DIN EN 1092-1 (material variant C)		
Flange position	Axial		
Pressure class	PN 16 PN 10 (from size DN 200)	PN 16	PN 10
Flange design	RF	RF	FF
Flange type	21-B	21-B	01-A

Table 31: Flange sizes

Size	Suction side	Discharge side	
	DN_1	DN_2	DN_3
050-032-125.1	50	32	40
050-032-160.1	50	32	40
050-032-200.1	50	32	40
050-032-250.1	50	32	40
050-032-125	50	32	40
050-032-160	50	32	40
050-032-200	50	32	40
050-032-250	50	32	40
065-040-125	65[14)]	40	50
065-040-160	65[14)]	40	50
065-040-200	65[14)]	40	50
065-040-250	65[14)]	40	50
065-040-315	65[14)]	40	50
065-050-125	65[14)]	50	65[14)]
065-050-160	65[14)]	50	65[14)]
065-050-200	65[14)]	50	65[14)]
065-050-250	65[14)]	50	65[14)]
065-050-315	80	50	65[14)]

14 Flange with 4 bolt holes

Size	Suction side	Discharge side	
	DN_1	DN_2	DN_3
080-065-125	80	65[14)]	80
080-065-160	80	65[14)]	80
080-065-200	80	65[14)]	80
080-065-250	80	65[14)]	80
080-065-315	80	65[14)]	80
100-080-160	100	80	100
100-080-200	100	80	100
100-080-250	100	80	100
100-080-315	100	80	100
100-080-400	100	80	100
125-100-160	125	100	125
125-100-200	125	100	125
125-100-250	125	100	125
125-100-315	125	100	125
125-100-400	125	100	125
150-125-200	150	125	150
150-125-250	150	125	150
150-125-315	150	125	150
150-125-400	150	125	150
200-150-200	200	150	200
200-150-250	200	150	200
200-150-315	200	150	200
200-150-400	200	150	200

Table 32: Flange design by materials

Material variant	Standard	Pressure class
GG, GB, GC	EN 1092-2	PN 16
CC	EN 1092-1	PN 16

Sets of spare parts

Etanorm V in design D

Table 33: Overview of spare parts sets

Spare parts set	Part No. (⇨ Page 34)	Description
210 - shaft	210	Shaft
	550.95[15)]	Disc
	920.95	Nut
	930.95	Safety device
	940.01	Key
	940.02	Key
102 - volute casing	102	Volute casing
	502.01	Casing wear ring
	902.01[16)]	Stud
	903.01	Screw plug
	903.03	Screw plug
	920.01[16)]	Nut

Etanorm V in design W

Table 34: Overview of spare parts sets

Spare parts set	Part No. (⇨ Page 34)	Description
210 - shaft	210	Shaft

15 For shaft unit 25 only
16 For bolted casing cover only

Spare parts set	Part No. (⇨ Page 34)	Description
210 - shaft	515	Locking ring
	550.95[17)]	Disc
	840	Coupling
	914.24	Hexagon socket head cap screw
	920.95	Nut
	930.95	Safety device
	940.01	Key
211 - pump shaft	211	Pump shaft
	515	Locking ring
	550.95[17)]	Disc
	561.29	Grooved pin
	914.24	Hexagon socket head cap screw
	920.95	Nut
	930.95	Safety device
	940.01	Key
102 - volute casing	102	Volute casing
	502.01	Casing wear ring
	902.01[18)]	Stud
	903.01	Screw plug
	903.03	Screw plug
	920.01[18)]	Nut
161 - casing cover	161	Casing cover
	502.02	Casing wear ring
515 - locking ring	515	Locking ring
	914.24	Hexagon socket head cap screw
381 - bearing cartridge	381.01	Bearing cartridge
	412.24	O-ring
	504[19)]	Spacer ring
	529.16	Bearing sleeve
	550.80[20)]	Disc
	561.29	Grooved pin
	932.41[20)]	Circlip
	932.42[21)]	Circlip
341 - drive lantern	68-3.02	Cover plate
	341	Drive lantern
	902.11	Stud
	920.11	Nut

Scope of supply

Depending on the model, the following items are included in the scope of supply:

- Pump
- Drive
- Cover plate
- Discharge line

17 For shaft unit 25 only
18 For bolted casing cover only
19 Only for Etanorm V, in stainless steel, design W, shaft unit 55
20 Only for Etanorm V, in cast iron, design W, shaft unit 55
21 Only for Etanorm V, in cast iron, design W, shaft units 25, 35 and 55

General assembly drawings

General assembly drawing with list of components for D design

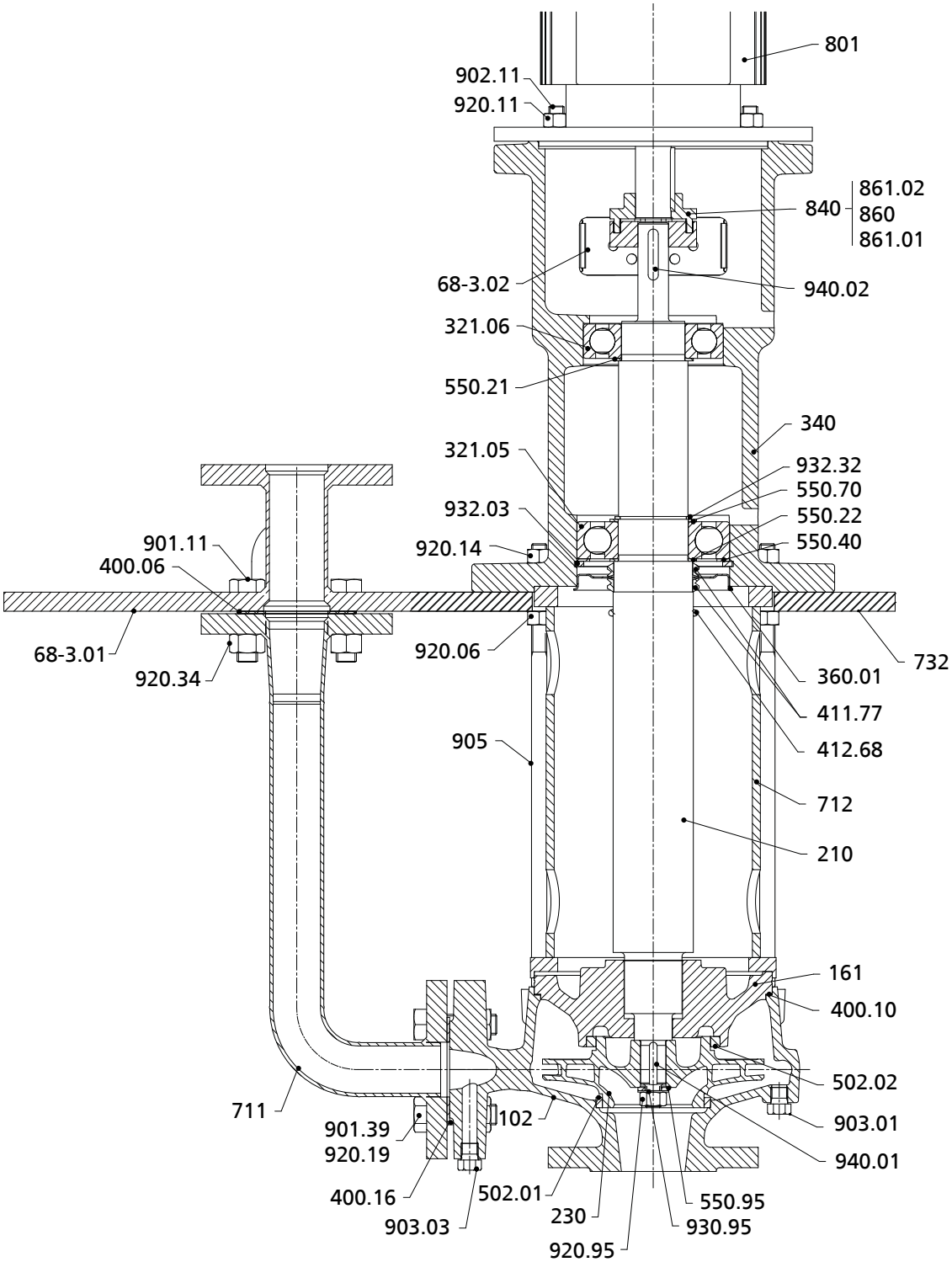

Fig. 5: General assembly drawing Etanorm V, design D

1228.5/08-EN

Table 35: Detail drawings Etanorm V, design D

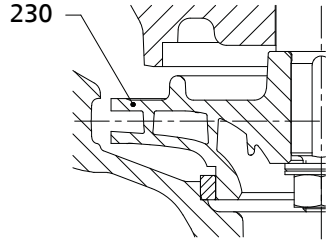	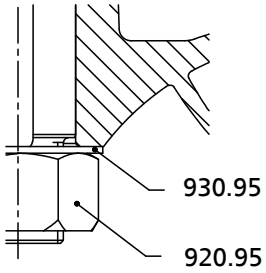
Impeller, unbalanced 50-32-125.1 50-32-160.1 50-32-125 65-40-125	Impeller fastening Material variants GG / CC; shaft units WS 35 / 55
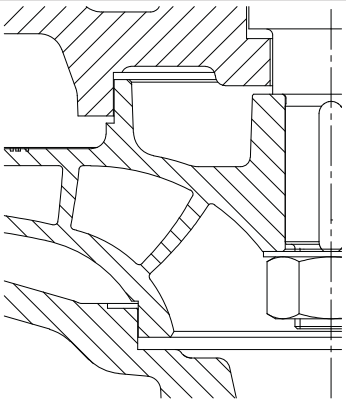	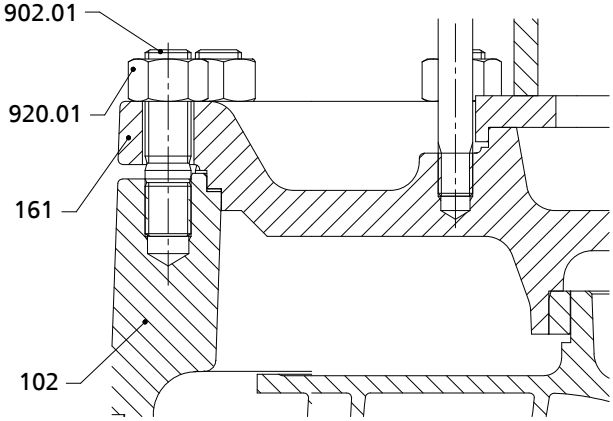
Drawing without casing wear ring Material variant CC	Bolted casing cover Material variants GG / CC; shaft units WS 25 / 35 / 55
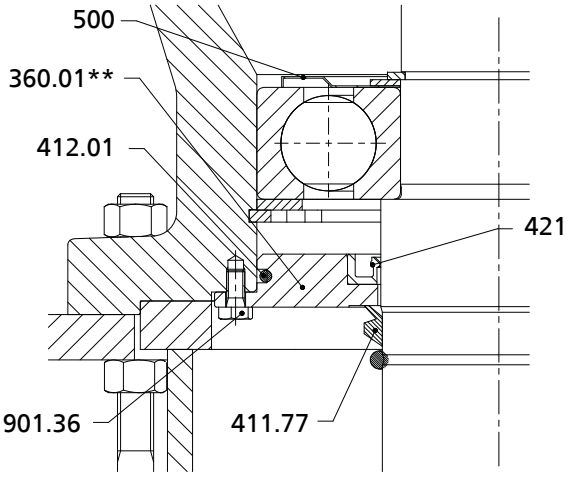	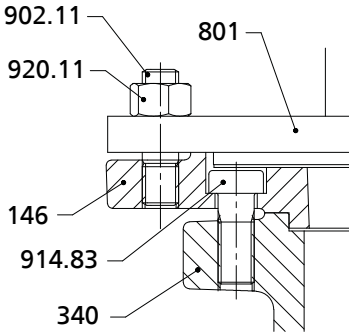
Ball bearing Material variants GG / CC; ** Only for shaft unit WS 55	Intermediate lantern, for the following shaft units: WS_25: motor 132 / 160 / 180 WS_35: motor 132 / 160 / 180 / 200 / 225 WS_55: motor 225 (4 poles) / 250 (4 poles) / 280 (4 poles)
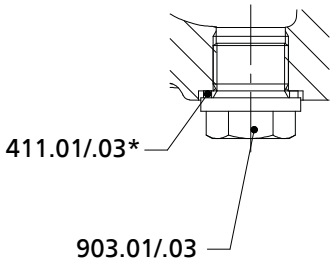	
Drain plug * For material variant CC only	

Table 36: List of components

Part No.	Description	Part No.	Description
68-3.01/.02	Cover plate	711	Column pipe
102	Volute casing	712	Support column
146	Intermediate lantern	732[22]	Holder
161	Casing cover	801	Flanged motor
210	Shaft	840	Coupling
230	Impeller	860	Coupling part
321.05/.06	Radial ball bearing	861.01/.02	Half coupling
340	Bearing lantern	901.11/.36/.39	Hexagon head bolt
360.01	Bearing cover	902.01/.11	Stud
400.06/.10/.16	Gasket	903.01/.03	Screw plug
411.01/.03/.77	Joint ring	905	Tie bolt
412.01[23]/.68	O-ring	914.83	Hexagon socket head cap screw
421[23]	Lip seal	920.01/.06/.11/.14/.19/.34/.95	Nut
500[23]	Ring	930.95	Safety device
502.01/.02	Casing wear ring	932.03/.32	Circlip
550.21/.22/.40/.70/.95[24]	Disc	940.01[25]/.02	Key

22 On pumps without cover plate only
23 For WS_55 only
24 For WS_25 only
25 2x for WS_55

General assembly drawing with list of components for W design

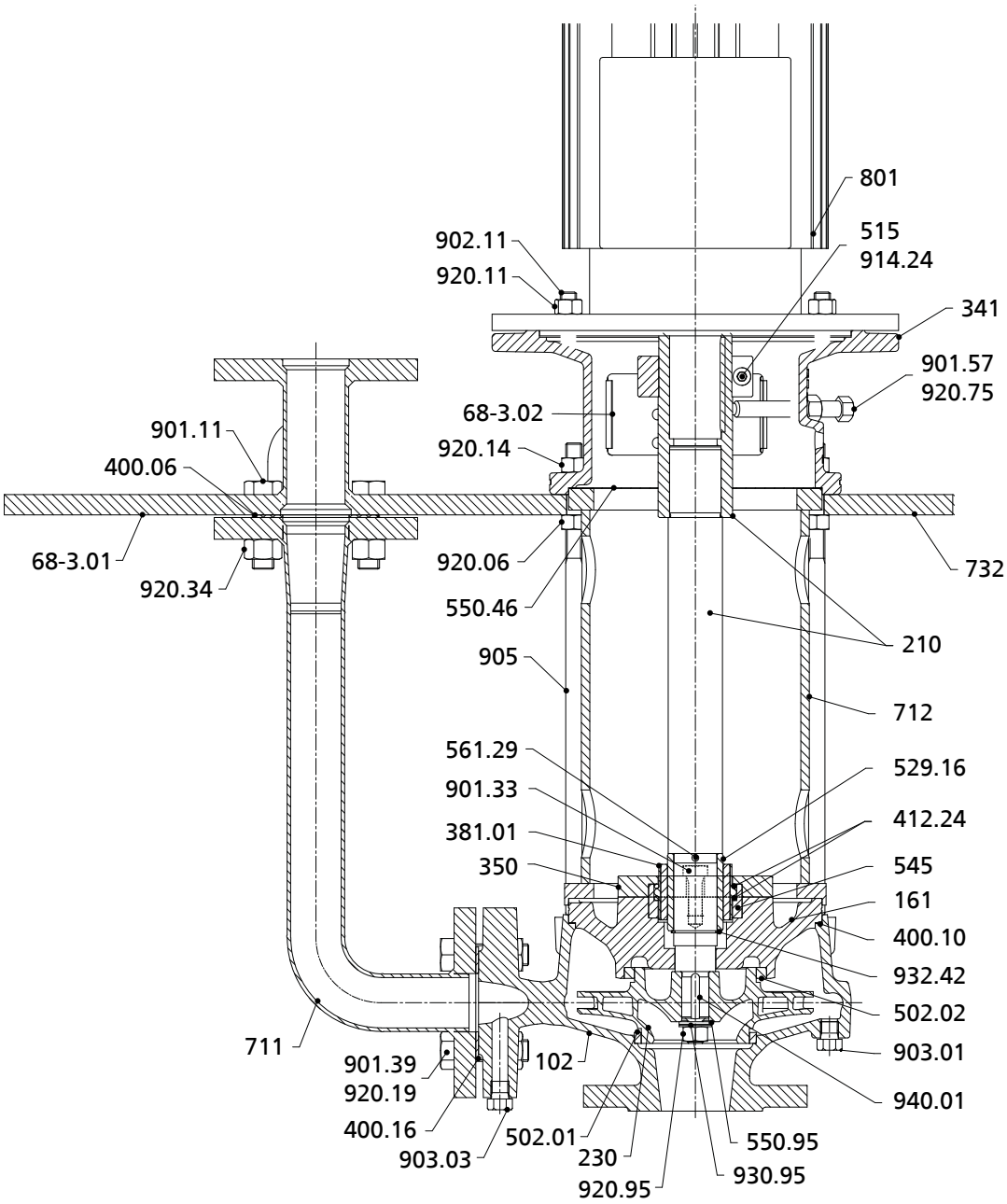

Fig. 6: General assembly drawing Etanorm V, design W

Table 37: Detail drawings Etanorm V, design W

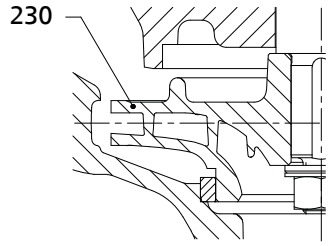	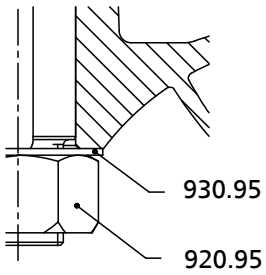
Impeller, unbalanced 50-32-125.1 50-32-160.1 50-32-125 65-40-125	Impeller fastening Material variants GG / CC; shaft units WS 35 / 55
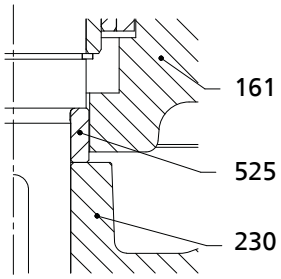	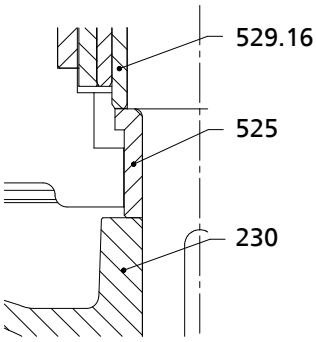
Spacer sleeve Material variant GG; shaft units WS 35 / 55	Spacer sleeve and bearing sleeve Material variant CC; shaft units WS 25 / 35 / 55
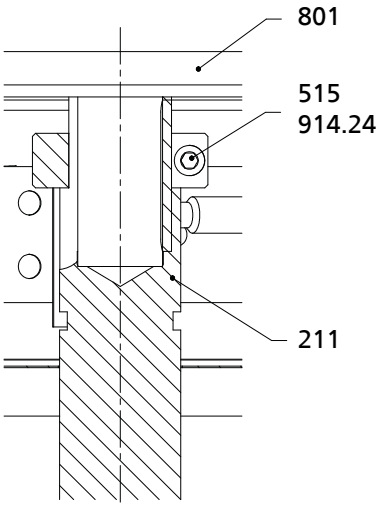	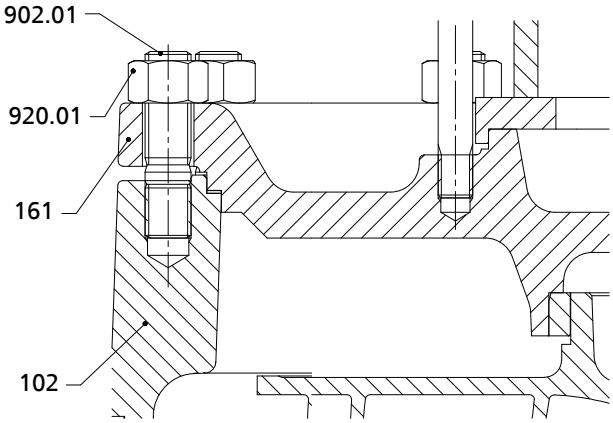
Motor connection Material variants GG / CC; shaft units WS 25 / 35; motors 100 / 112	Bolted casing cover Material variants GG / CC; shaft units WS 25 / 35 / 55

1228.5/08-EN

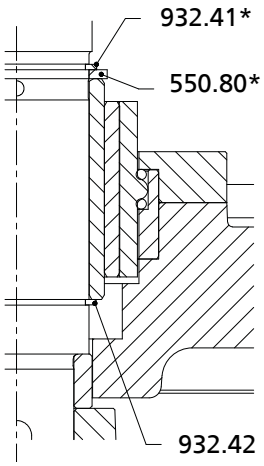

Fig. 1_ WS55
Material variant GG;
* For shaft unit WS 55 only

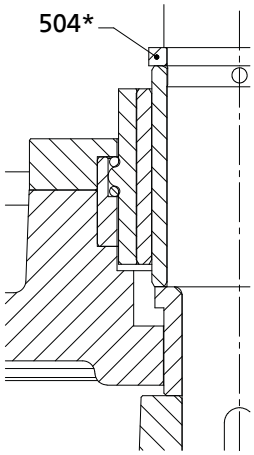

Fig. 2_WS55
Material variant CC; shaft unit WS 55

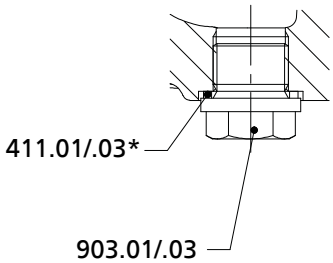

Drain plug
* For material variant CC only

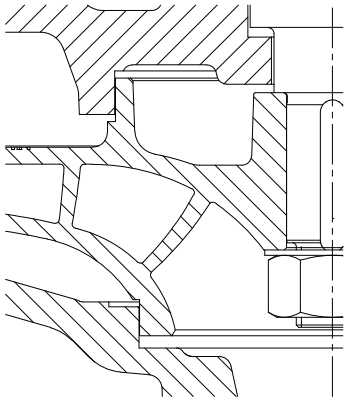

Drawing without casing wear ring
Material variant CC

Table 38: List of components

Part No.	Description	Part No.	Description
68-3.01/.02	Cover plate	545	Bearing bush
102	Volute casing	550.46/.80[26]/.95[27]	Disc
161	Casing cover	561.29	Grooved pin
210	Shaft	711	Riser
211	Pump shaft	712	Support column
230	Impeller	732[28]	Bracket
341	Drive lantern	801	Flanged motor
350	Bearing housing	901.11/.33/.39/.57[29]	Hexagon head bolt
381.01	Bearing cartridge	902.01/.11	Stud
400.06/.10/.16	Gasket	903.01/.03	Screw plug
411.01/.03	Joint ring	905	Tie bolt
412.24	O-ring	914.24	Hexagon socket head cap screw
502.01/.02	Casing wear ring	920.01/.06/.11/.14/.19/.34/.75[29]/.95	Nut
504[26]	Spacer ring	930.95	Safety device
515	Locking ring	932.41[26]/.42	Circlip
525	Spacer sleeve	940.01[30]	Key
529.16	Bearing sleeve		

26 For WS_55 only
27 For WS_25 only
28 On pumps without cover plate only
29 Assembly aid or transport lock
30 2x for WS_55

Glossary

IE2

Efficiency class to IEC 60034-30: 2 = High Efficiency (IE = International Efficiency)

IE3

Efficiency class to IEC 60034-30: 3 = Premium Efficiency (IE = International Efficiency)

IE4

Efficiency class to IEC TS 60034-30-2:2016 = Super Premium Efficiency (IE = International Efficiency)

IE5

Efficiency class to IEC TS 60034-30-2:2016 = Ultra Premium Efficiency (IE = International Efficiency)

1228.5/08-EN

2023-05-23

1228.5/08-EN

LENNTECH
WATER TREATMENT SOLUTIONS
info@lenntech.com Tel. +31-152-610-900
www.lenntech.com Fax. +31-152-616-289

KSB