In-line Pump

ILN / ILNC / ILNR

Type Series Booklet

Legal information/Copyright

Type Series Booklet ILN / ILNC / ILNR

All rights reserved. The contents provided herein must neither be distributed, copied, reproduced, edited or processed for any other purpose, nor otherwise transmitted, published or made available to a third party without the manufacturer's express written consent.

Subject to technical modification without prior notice.

© KSB ITUR Spain, S.A., Zarautz, España 09/12/2020

Contents

Centrifugal Pumps with Shaft Seal **4**
Vertical In-line Pumps 4
ILN/ILNC/ILNR 4
Main applications 4
Fluids handled 4
Operating data 4
Design 4
Designation 6
Materials 7
Coating and preservation 7
Product benefits 8
Product information 8
Acceptance tests and warranty 8
Pressure limits 8
Technical data 9
Selection charts 11
Dimensions and connections 25
Flange design 37
Recommended spare parts stock 38
General assembly drawings with list of components 39

Centrifugal Pumps with Shaft Seal

Vertical In-line Pumps

ILN/ILNC/ILNR

Main applications

- Heating systems
- Cooling circuits
- Air-conditioning systems
- Marine applications
- Service water supply systems
- Water supply systems
- Cleaning systems
- Industrial recirculation systems

Fluids handled

- Brackish water
- Service water
- River water, lake water and groundwater
- Heating water
- Industrial service water
- Cooling water
- Fire-fighting water
- Seawater
- Cleaning agents
- Swimming pool water
- Brine
- Boiler feed water
- Drinking water
- High-temperature hot water
- Wash water
- Hydrocarbons (Consult KSB)

Operating data

ILN operating data

Operating properties

Characteristic		Value	
		50 Hz	60 Hz
Flow rate	Q [m³/h]	≤ 3310	≤ 3700
Head	H [m]	≤ 112	≤ 162
Fluid temperature	$T_{min.}$ [°C]	≥ -20	
	$T_{max.}$ [°C]	≤ +70	
Operating pressure	p [bar]	≤ 16	
Speed	n [rpm]	≤ 3000	≤ 3600

ILNC operating data

Operating properties

Characteristic		Value	
		50 Hz	60 Hz
Flow rate	Q [m³/h]	≤ 370	≤ 447
Head	H [m]	≤ 112	≤ 161
Fluid temperature	$T_{min.}$ [°C]	≥ -20	
	$T_{max.}$ [°C]	≤ +70	
Operating pressure	p [bar]	≤ 16	
Speed	n [rpm]	≤ 3000	≤ 3600

ILNR operating data

Operating properties

Characteristic		Value	
		50 Hz	60 Hz
Flow rate	Q [m³/h]	≤ 1600	≤ 2000
Head	H [m]	≤ 93	≤ 85
Fluid temperature	$T_{min.}$ [°C]	≥ -15	
	$T_{max.}$ [°C]	≤ +70	
Operating pressure	p [bar]	≤ 10	
Speed	n [rpm]	≤ 1450	≤ 1750

Design

Design details ILN

Design

- In-line design
- Vertical installation
- Single-stage
- Single-suction or double-suction[1)]
- Coupling between pump and motor
- Spacer bush (except 350-300-330 and 500-400-430)

Pump casing

- Radially split volute casing
- Volute casing with integrally cast pump feet
- Replaceable casing wear rings

Drive (fixed speed version)

- Surface-cooled IEC three-phase motor
- Type of construction IM V1
- Frequency 50 Hz/60 Hz
- Enclosure IP55
- 230/400 V and 400/690 V

Shaft seal

- Mechanical seal

Impeller type

- Closed radial impeller

1 Double-suction design for sizes 350-300-330 and 500-400-430

5211.5/03-EN

Bearings

- Upper bearing:
  - Closed deep groove ball bearing
  - Greased for life
- Lower bearing:
  - Closed deep groove ball bearing or closed double-row angular contact ball bearing
  - Greased for life

Automation

Automation options:

- PumpDrive
- PumpMeter

For operation on a frequency inverter consultation with KSB is required.

Design details ILNC

Design

- Close-coupled design / in-line design
- Vertical installation
- Single-stage
- Single-suction

Pump casing

- Radially split volute casing
- Volute casing with integrally cast pump feet
- Replaceable casing wear rings

Drive (fixed speed version)

- Surface-cooled IEC three-phase motor
- Type of construction IM V1
- Frequency 50 Hz/60 Hz
- Enclosure IP55
- 230/400 V and 400/690 V

Shaft seal

- Mechanical seal

Impeller type

- Closed radial impeller

Bearings

- Closed deep groove ball bearing or closed double-row angular contact ball bearing
- Greased for life

Automation

Automation options:

- PumpDrive
- PumpMeter

For operation on a frequency inverter consultation with KSB is required.

Design details ILNR

Design

- In-line design
- Vertical installation
- Single-stage
- Single-suction
- Coupling between pump and motor

Pump casing

- Radially split volute casing
- Volute casing with integrally cast pump feet
- Replaceable casing wear rings

Drive (fixed speed version)

- Surface-cooled IEC three-phase motor
- Type of construction IM V1
- Frequency 50 Hz/60 Hz
- Enclosure IP55
- 230/400 V and 400/690 V

Shaft seal

- Mechanical seal

Impeller type

- Closed radial impeller

Bearings

- Upper bearing:
  - Closed deep groove ball bearing or closed double-row angular contact ball bearing
  - Greased for life
- Lower bearing:
  - Closed deep groove ball bearing
  - Greased for life

Automation

Automation options:

- PumpDrive
- PumpMeter

For operation on a frequency inverter consultation with KSB is required.

5211.5/03-EN

Designation

Designation example

Position																																	
1	2	3	4	5	6	7	8	9	10	11	12	13	14	15	16	17	18	19	20	21	22	23	24	25	26	27	28	29	30	31	32	33	34
I	L	N	C		0	5	0	-	0	3	2	-	2	0	0	A	G	B		I	1	1	D	M	B	V	0	0	3	0	2	5	A
See name plate and data sheet																									See data sheet								

Designation key

Position	Code	Description
1-4	Pump type	
	ILN	Long-coupled in-line pump
	ILNC	Close-coupled in-line pump
	ILNR	Long-coupled in-line pump, additional sizes
5	Priming system	
	-[2]	Without priming system
	S	With auxiliary pump
	E	With ejector
6-17	Size	
	050	Nominal suction nozzle diameter [mm]
	032	Nominal discharge nozzle diameter [mm]
	200	Nominal impeller diameter [mm]
	A	Hydraulic system
18	Pump casing material	
	G	EN-GJL-250 / A48CL35
	B	CC491K-GS
	A	CC333G-GS
	D	A995 Gr. 1 B
	D	A995 Gr. 5A
19	Impeller material	
	B	CC480K-GS
	B	CC333G-GS
	1	A890 Gr. 1 B
	2	A890 Gr. 5A
20	Design	
	-[2]	Standard
	X	Non-standard (BT3D, BT3)
21	Shaft seal type	
	I	Single mechanical seal, internal circulation
22-23	Seal code	
	01	Q1Q1VGG
	07	Q1Q1EGG
	11	BQ1EGG
	31	Q1Q1VMM
	20	AQ1PGG
24	Scope of supply	
	A	Pump only (Fig. 0)
	D	Pump set
25	Special design	
	-[2]	Standard
	M	Design for marine applications
26-27	Inspection agency	
	-[2]	No acceptance inspection
	AB	ABS: American Bureau of Shipping
	BV	BV: Bureau Veritas
	DN	DNV: Det Norske Navale
	RI	RINA: Registro Italiano Navale

2 Blank

5211.5/03-EN

Position	Code	Description
26-27	GL	GL: Germanischer Lloyd
	RM	RMRS: Russian Maritime Register of Shipping
	CC	CCS: China Classification Society
	NK	NKK: Nippon Kaije Kyokai
	KR	KR: Korean Register
	LR	LR: Lloyd's Register
	ZZ	Other inspection agency
28-31	Motor rating P_N [kW]	
	0030	3
	1320	132
	0075	7,5
	0007	0,75
32	Number of motor poles	
33	Motor efficiency	
	0	No classification
	4	IE1
	5	IE2
	6	IE3
	7	IE4
34	Product generation	
	A	ILN/ILNC/ILNR from 2017

Materials

Overview of available materials

Part No.	Description	Material variant				
		GB	B	AB	D1	D2
102	Volute casing	EN-GJL-250	CC491K-GS	CC333G-GS	A995 Gr. 1 B	A995 Gr. 5 A
161	Casing cover	EN-GJL-250	CC491K-GS	CC333G-GS	A995 Gr. 1 B	A995 Gr. 5 A
181	Pump stool	EN-GJL-250[3]				
210	Shaft	1.4404[4]/1.4462	1.4404/1.4462	1.4404[5][6]	1.4462	1.4501/UNS S32760
230	Impeller	CC480K-GS	CC333G-GS		A890 Gr. 1 B	A890 Gr. 5 A
341	Drive lantern	Steel				
400	Gasket	DPAF				
412	O-ring	NBR 70				
502	Casing wear ring	CC493K-GC			A890 Gr. 1 B	A890 Gr. 5 A
901	Hexagon head bolt	8.8	A4-70			
903	Screw plug	11SMNPB30+C	AISI 316		1.4410 / 1.4501	
922	Impeller nut	Steel	1.4404 / AISI 316 L		1.4462	1.4410/1.4501
940	Key	1.4571+C			1.4462	1.4501

Coating and preservation

- Coating and preservation to KSB standard

3 C-15 for ILN 250-200-330 and 300-250-330
4 A276-S31803 for ILN 100-080-160
5 A276-S31803 for ILN 100-080-160 and 100-080-250
6 A276-S31803 for ILNC 065-040-2500, 065-050-200, 080-065-160, 100-080-160 with motors of size ≥ 200L

Product benefits

- Hydraulic characteristics optimised for excellent efficiency and NPSH, ensuring energy-efficient and environmentally friendly use of resources
- Operating costs reduced by trimming the nominal impeller diameter to match the specified duty point
- Lower operating costs through reduced energy consumption, optimised spare parts concept and hard-wearing design
- Casing sealed reliably – also in varying operating conditions – by O-ring or confined casing gasket
- Maintenance-free with grease-packed bearings sealed for life
- Long service life of the mechanical seal thanks to continuous venting of the mechanical seal chamber
- Vertical design with small footprint
- Service-friendly with easy-to-replace casing wear rings
- Space-saving in-line design
- Flexible coupling for easy mounting of the drive (variants ILN and ILNR)
- High stability and flexibility with baseplate that can be turned in steps of 90° (variants ILN up to 150/400 and ILNC)
- Automatic priming by auxiliary pump or ejector (variants S/E)

Product information

Product information as per Regulation No. 1907/2006 (REACH)

For information as per chemicals Regulation (EC) No. 1907/2006 (REACH), see http://www.ksb.com/reach.

Acceptance tests and warranty

- Materials testing
  - Test report 2.2 and inspection certificate 3.1 on request
- Final inspection
  - Inspection certificate 3.1/3.2 to EN 10204 on request
- Hydraulic test

  The duty point of each pump is guaranteed to ISO 9906/3B.

  The following acceptance tests can be performed and certified at extra charge:
  - Performance test to ISO 9906 (different tolerances)
  - NPSH test
- Other tests

  Other tests (e.g. vibrations, strength, noise characteristics) on request.
- Warranties

  Warranties are given within the scope of the valid terms and conditions of sale and delivery.

Pressure limits

Pressure limits

Pump type	Size	Max. operating pressure [bar]
ILN	080-065-160	16
	080-065-250	16
	080-065-315	10
	100-080-160	16
	100-080-200	16
	100-080-250	16
	100-080-315	10
	100-080-400	10
	150-100-250	10
	150-100-315	10
	150-100-400	10
	150-125-250	10
	150-125-315	10
	150-125-400	10
	200-150-250	6
	200-150-315	6
	200-150-400	10
	250-200-330	6[7)]
	300-250-330	6[7)]
	350-300-330	6
	500-400-430	6
ILNC	050-032-160	16
	050-032-200	16
	050-032-250	16
	065-040-160	16
	065-040-250	16
	065-050-200	16
	080-065-160	16
	080-065-250	16
	080-065-315	10
	100-080-160	16
	100-080-200	16
	100-080-250	16
	100-080-315	10
	150-100-250	10
	150-100-315	10
	150-125-250	10
ILNR	200-150-500	10
	250-200-400	10
	250-200-500	10
	300-250-400	10
	300-250-500	10
	350-300-400	10
	350-300-500	10

5211.5/03-EN

7 For material variants AB, D1 and D2 max. operating pressure 10 bar

Technical data

ILN

Technical data

Size	Bearing sizes		Impeller			
	Upper bearing	Lower bearing	Impeller outlet width	Impeller inlet diameter	Impeller diameter	
					max.	min.
			[mm]	[mm]	[mm]	[mm]
080-065-160	6306-2RS C3	6306-2RS C3	21	110	177	140
080-065-250	3308 -2RS C3	6308-2RS C3	14	114	266	216
080-065-315	6211-2RS C3	6211-2RS C3	12	99	328	281
100-080-160	6306-2RS C3	6306-2RS C3	33	131	177	160 / 132
100-080-200	3308 -2RS C3	6308-2RS C3	25	144	214	184
100-080-250	3308 -2RS C3	6308-2RS C3	20	144	271	210
100-080-315	6211-2RS C3	6211-2RS C3	17,5	125	336	276
100-080-400	6211-2RS C3	6211-2RS C3	9	115	408	320
150-100-250	3308 -2RS C3	6308-2RS C3	28	167	266	226
150-100-315	6211-2RS C3	6211-2RS C3	23,5	139	336	276
150-100-400	6211-2RS C3	6211-2RS C3	17	143	412	336
150-125-250	3308 -2RS C3	6308-2RS C3	37 / 38	166 / 167	271	221
150-125-315	6211-2RS C3	6211-2RS C3	30,5	163	336	276
150-125-400	6211-2RS C3	6211-2RS C3	24	171	418	338
200-150-250	3308 -2RS C3	6308-2RS C3	49	191	269	220
200-150-315	3312 -2RS C3	6310-2RS C3	40	191,5	340	264
200-150-400	6211-2RS C3	6211-2RS C3	33,5	169	418	330
250-200-330	3312 -2RS C3	6310-2RS C3	54	220	330	250
300-250-330	3312 -2RS C3	6310-2RS C3	72	240	338	290
350-300-330	Plain bearing	6211-2RS C3	45	230 / 240	340	268
500-400-430	Plain bearing	3212 2RS C3	68	330	490	358 / 356

ILNC

Technical data

Size	Bearing size[8)]	Impeller			
		Impeller outlet width	Impeller inlet diameter	Impeller diameter	
				max.	min
		[mm]	[mm]	[mm]	[mm]
050-032-160	6309-2RS C3	5 / 6	56 / 61	177	138
050-032-200	6309-2RS C3	4 / 6	56 / 61	208 / 212	180 / 180
050-032-250	6309-2RS C3	5	69	266	216
065-040-160	6309-2RS C3	7 / 12	70 / 76	177	137
065-040-250	6309-2RS C3	4,5 / 8	70 / 76	266	226
065-050-200	6309-2RS C3	7 / 12	80 / 85	218	178
080-065-160	6309-2RS C3	21	110	177	140
080-065-250	6310-2RS C3/ 3310-2RS C3	15	114	266	216
080-065-315	6211-2RS C3	12	99	271	221
100-080-160	6309-2RS C3	33	131	177	160 / 132
100-080-200	6310-2RS C3 / 3310-2RS C3	25	144	214	184
100-080-250	6310-2RS C3/ 3310-2RS C3	20	144	271	210
100-080-315	6211-2RS C3	17,5	125	366	276
150-100-250	6310-2RS C3	28	167	266	226
150-100-315	6211-2RS C3	23,5	139	336	276
150-125-250	6310-2RS C3	37	166 / 167	245	195

8 Bearing design depending on motor size

ILNR

Technical data

Size	Bearing sizes		Impeller			
	Upper bearing	Lower bearing	Impeller outlet width	Impeller inlet diameter	Impeller diameter	
					max.	min.
			[mm]	[mm]	[mm]	[mm]
200-150-500	6413 C3	6413 C3	21	200	500	410
250-200-400	6413 C3	6413 C3	38	240	405	340
250-200-500	6413 C3	6413 C3	36	220	510	420
300-250-400	6413 C3	6413 C3	58	280	405	340
300-250-500	6413 C3	6413 C3	44	260	520	420
350-300-400	6413 C3	6413 C3	65	290	430	360
350-300-500	6413 C3	6413 C3	56	290	520	450

5211.5/03-EN

Selection charts

ILN, n = 960 rpm

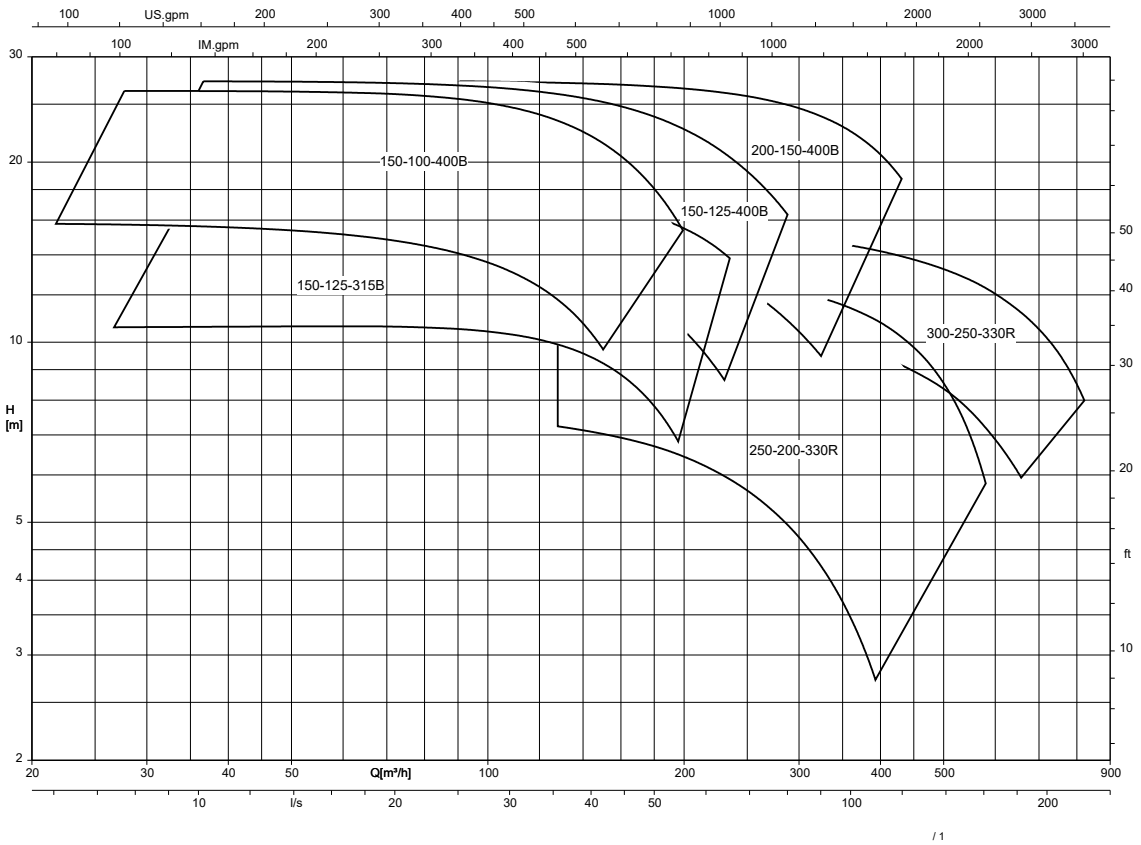

ILN, n = 1450 rpm

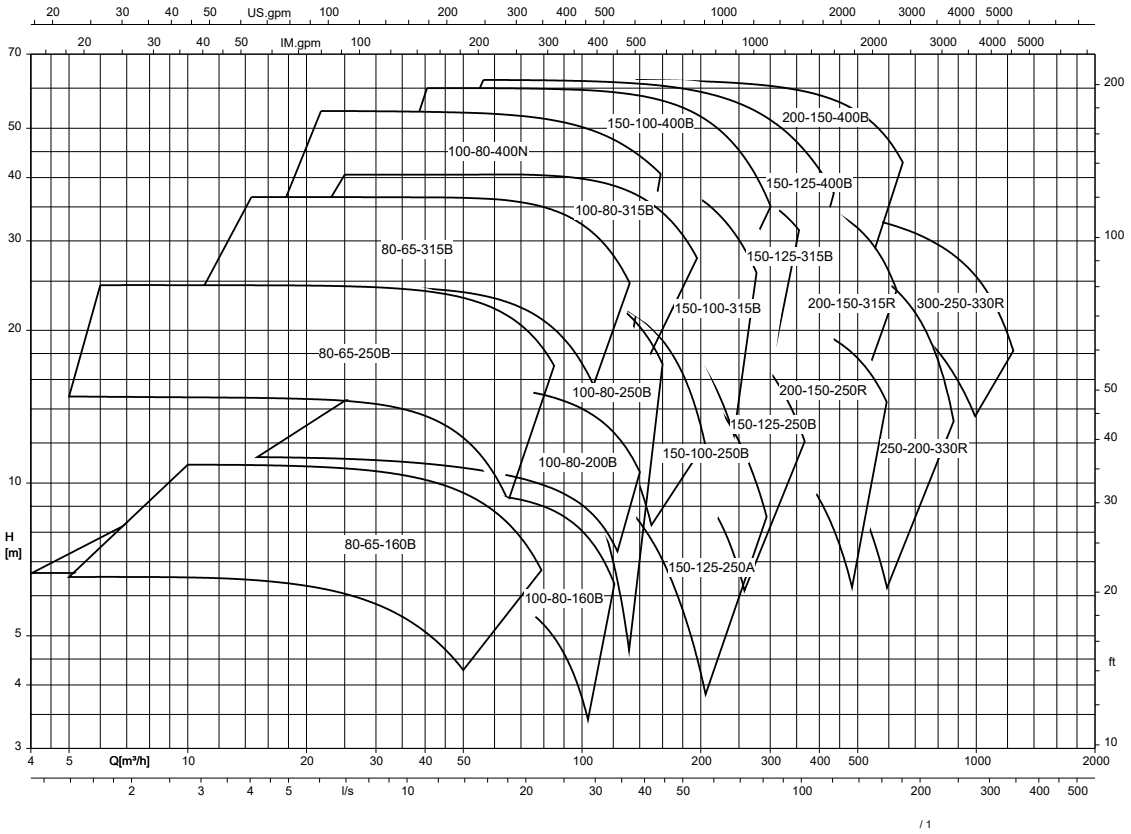

ILN, n = 2900 rpm

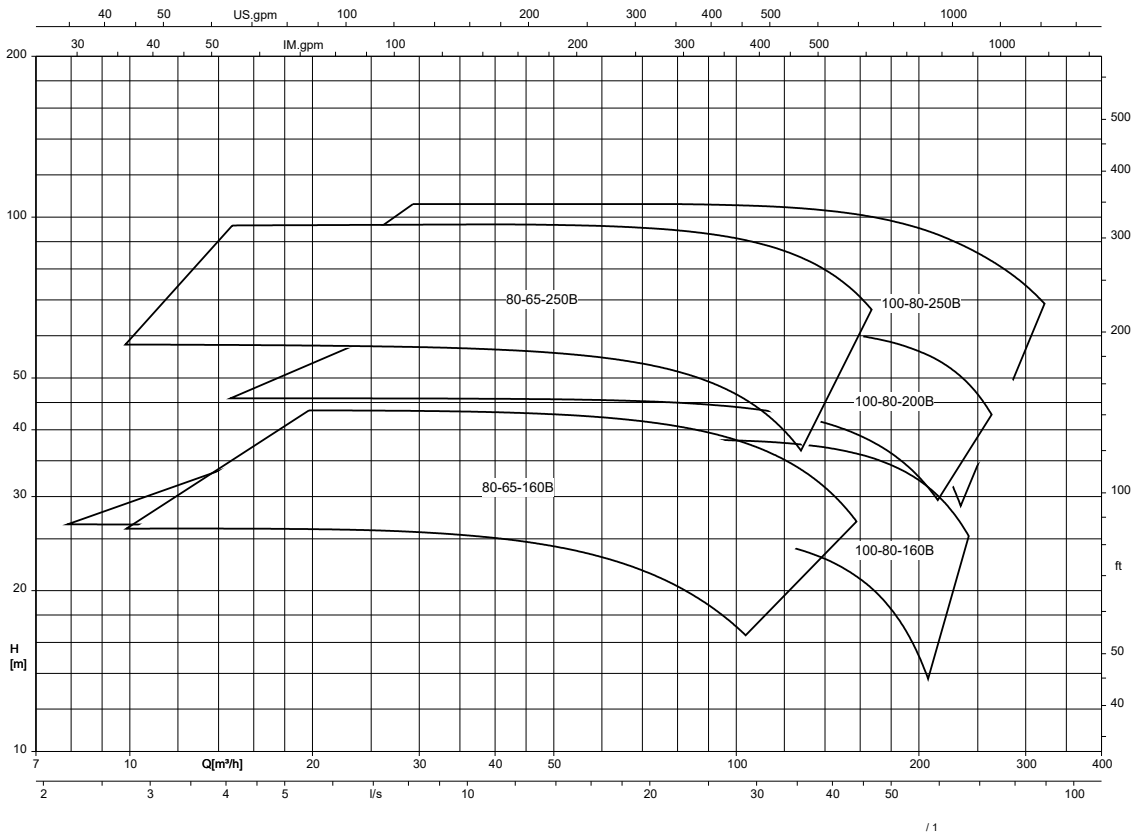

ILN, n = 1160 rpm

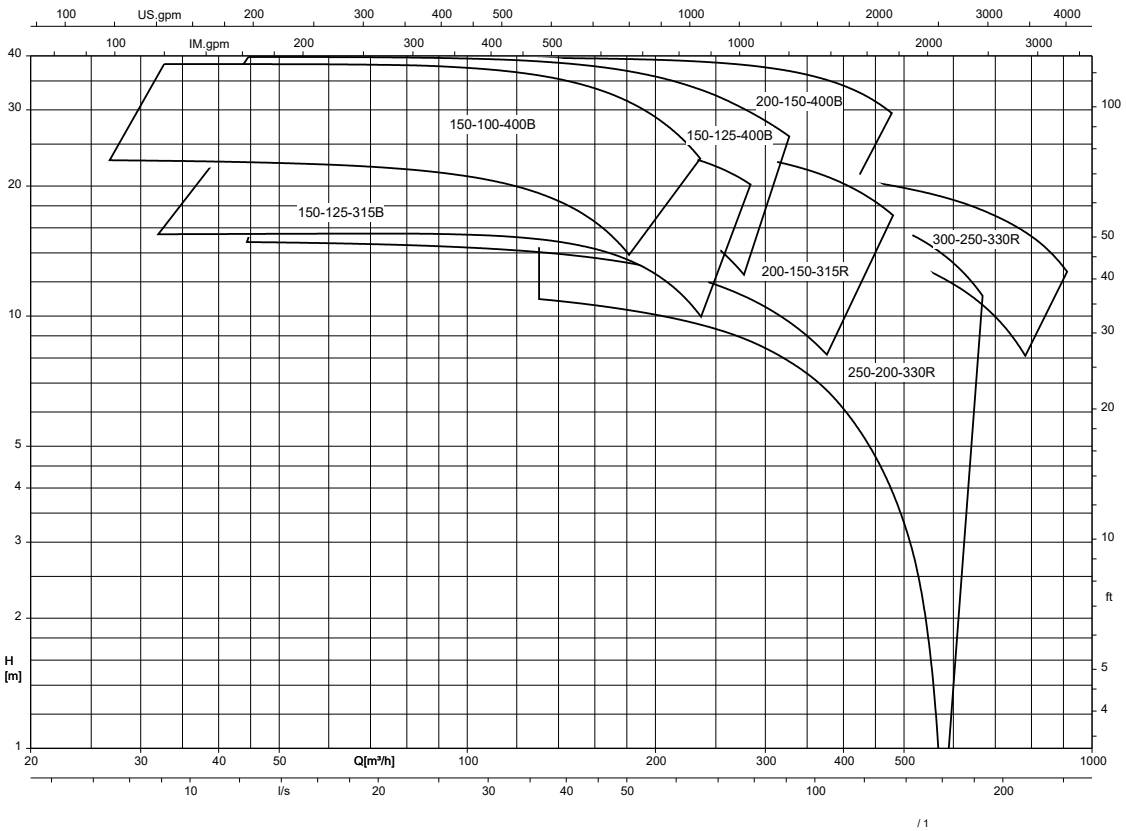

5211.5/03-EN

ILN, n = 1750 rpm

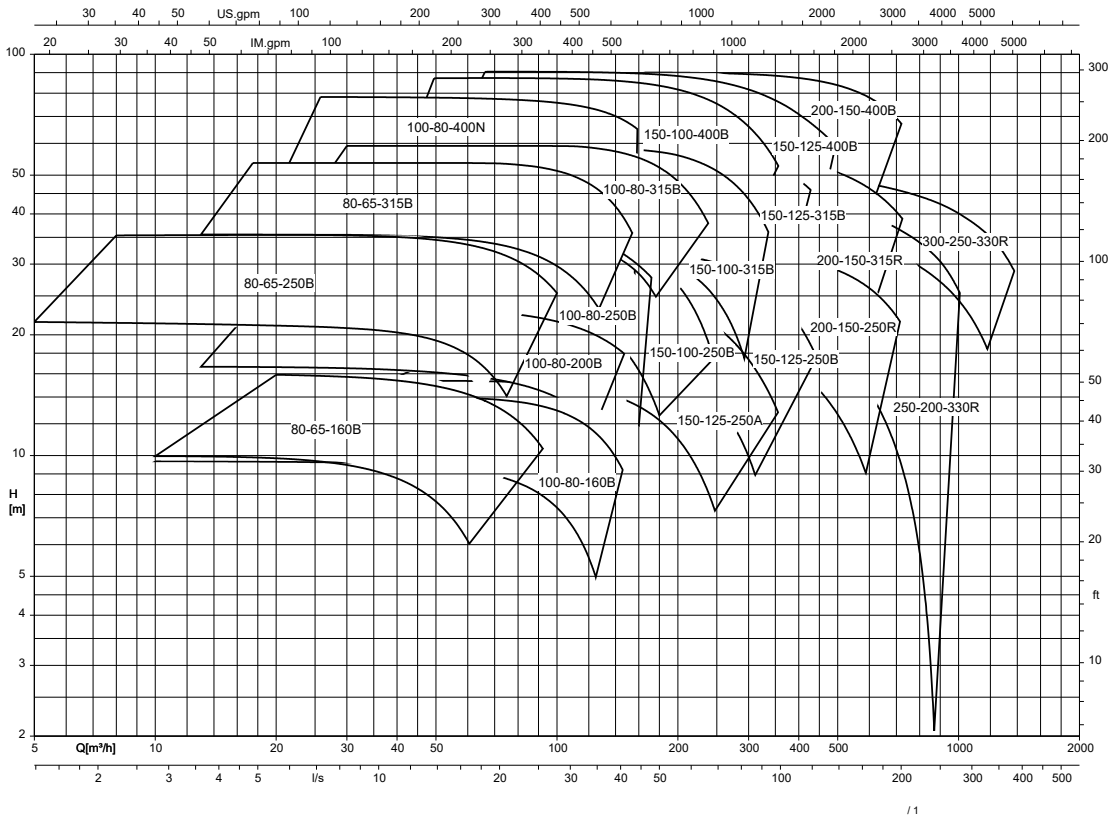

ILN, n = 3500 rpm

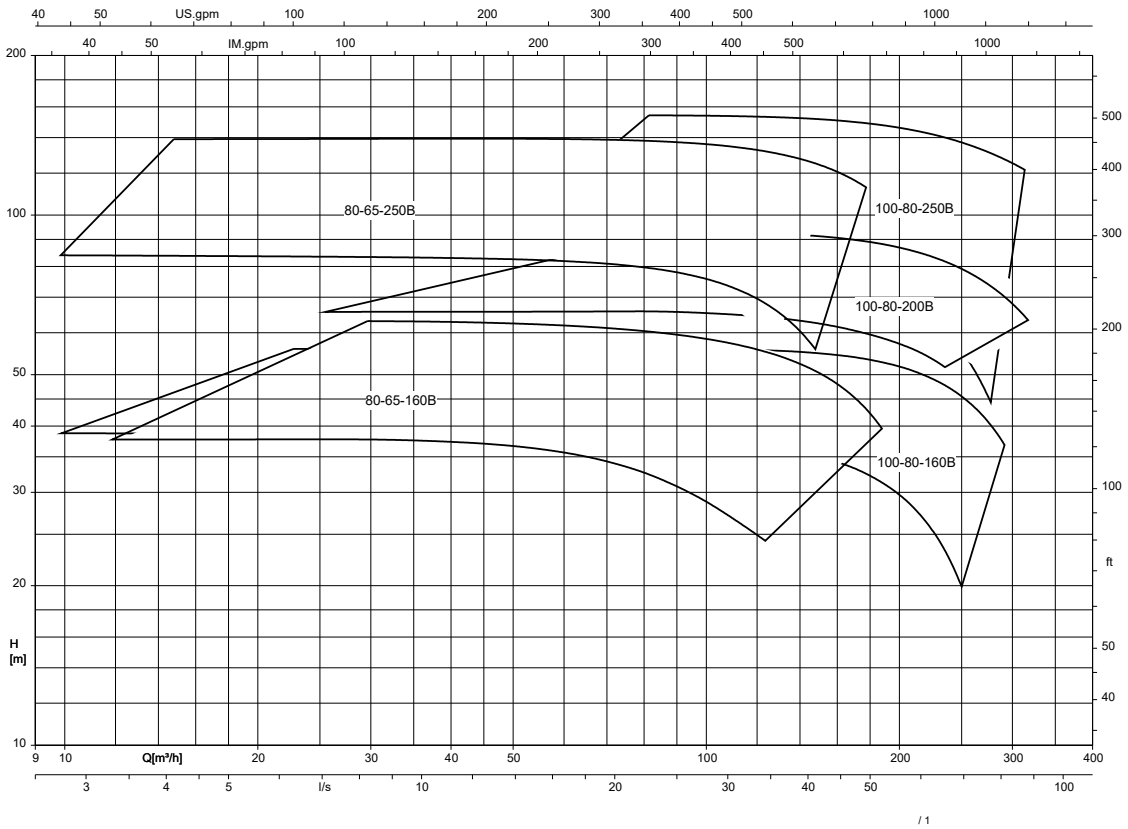

5211.5/03-EN

ILNC, n = 1450 rpm

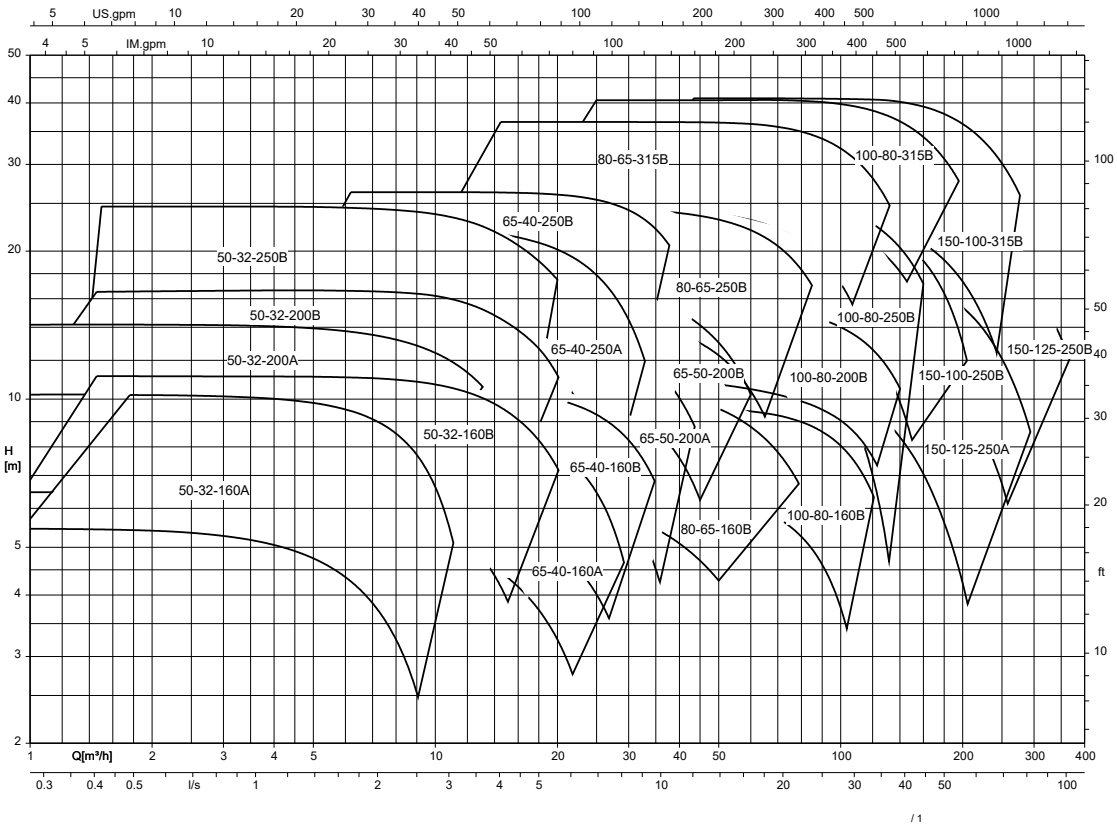

5211.5/03-EN

ILNC, n = 2900 rpm

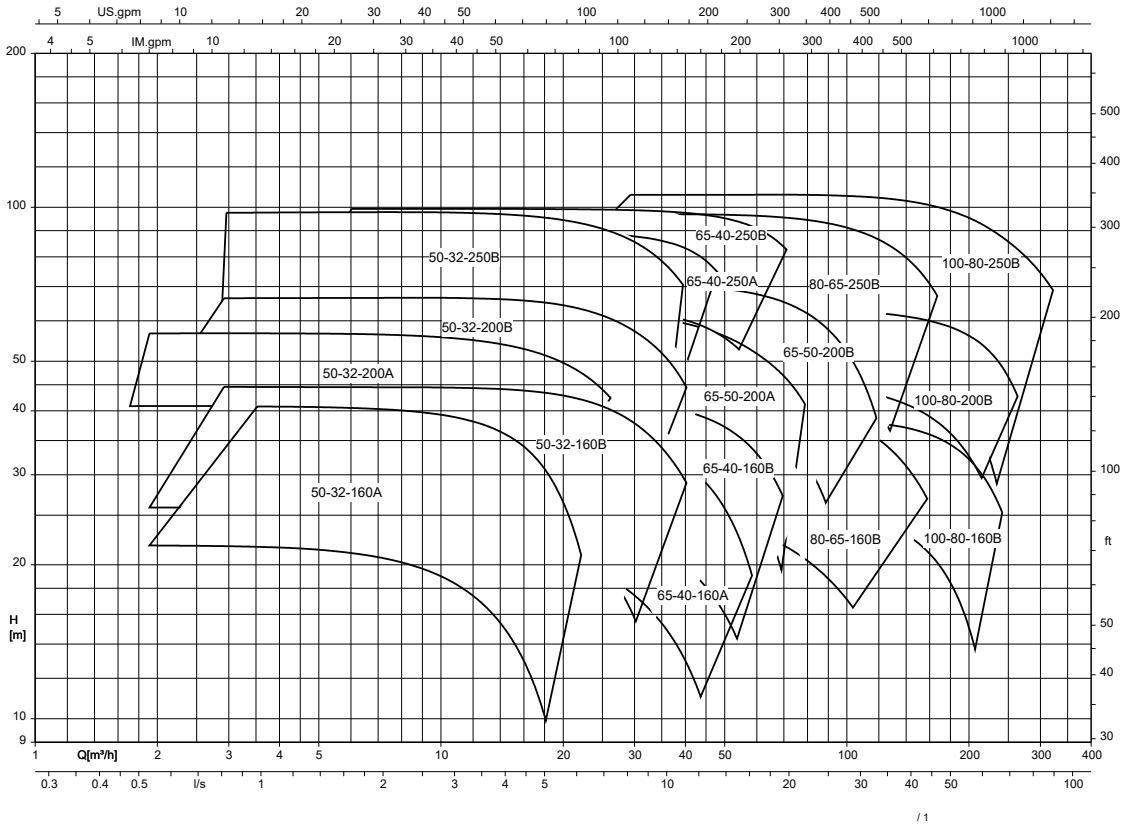

5211.5/03-EN

ILNC, n = 1750 rpm

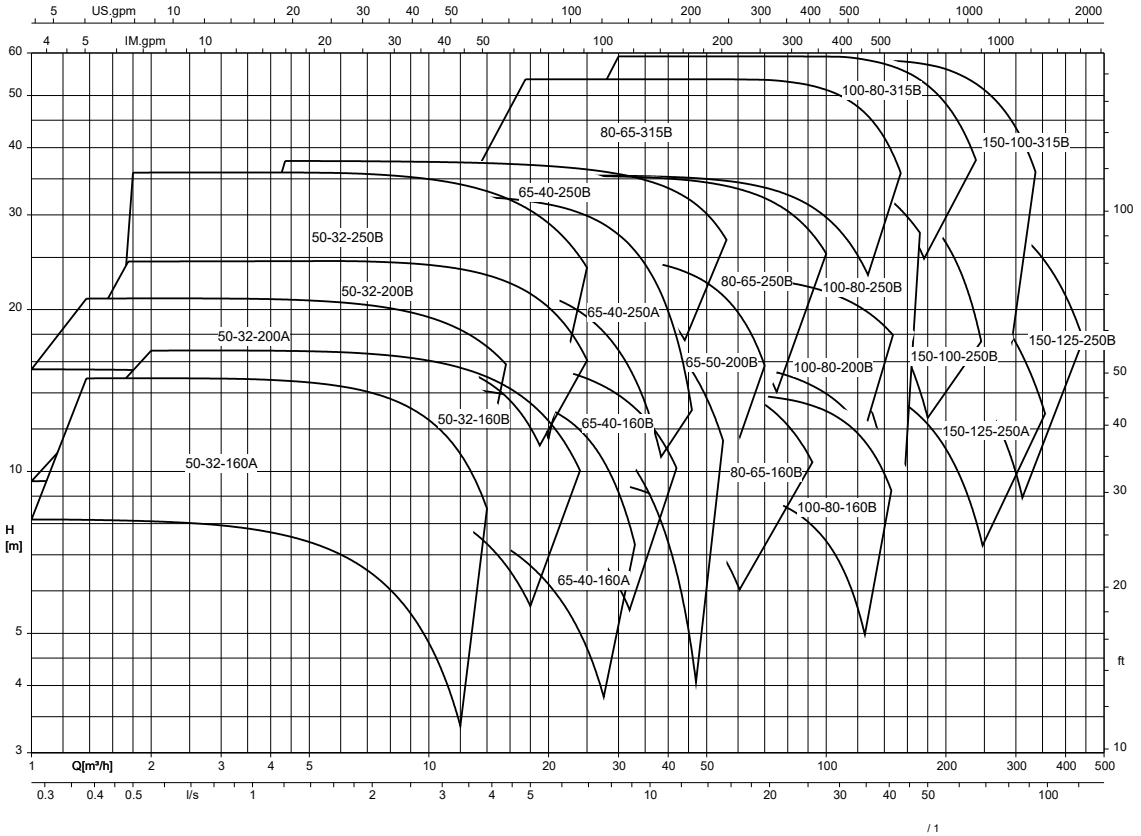

ILNC, n = 3500 rpm

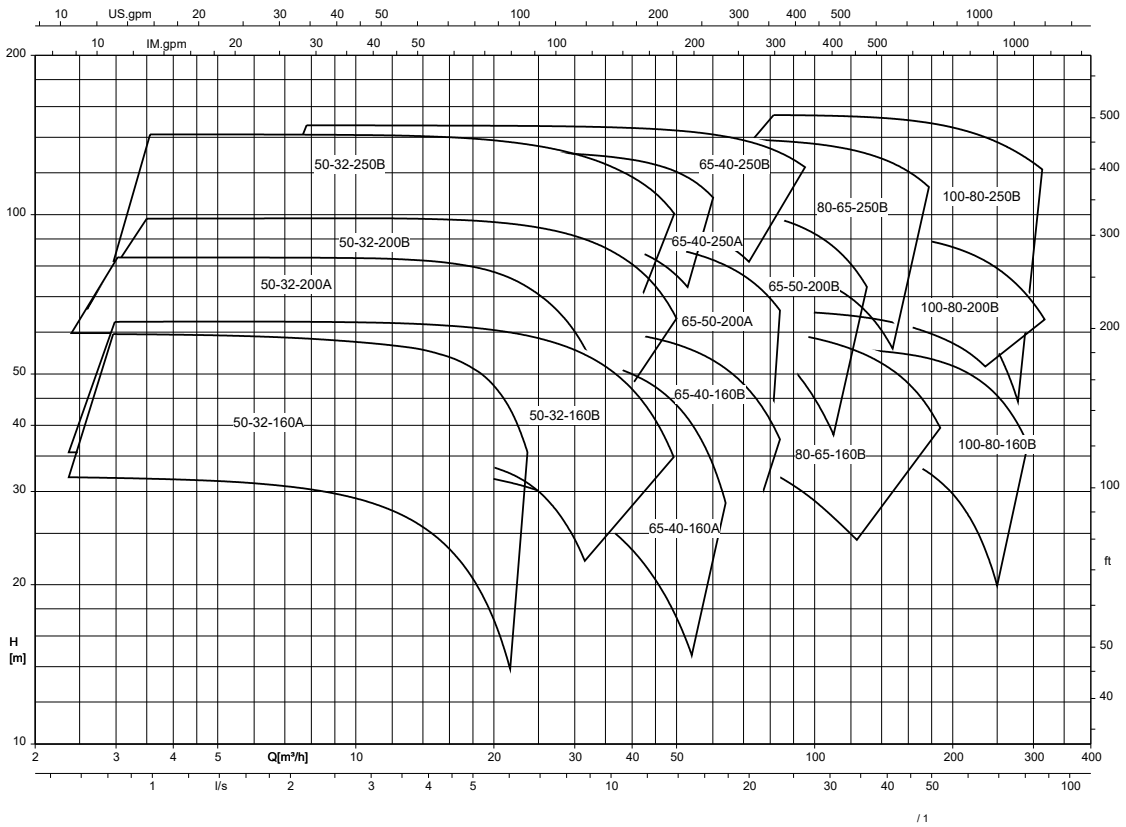

5211.5/03-EN

ILNR, n = 960 rpm

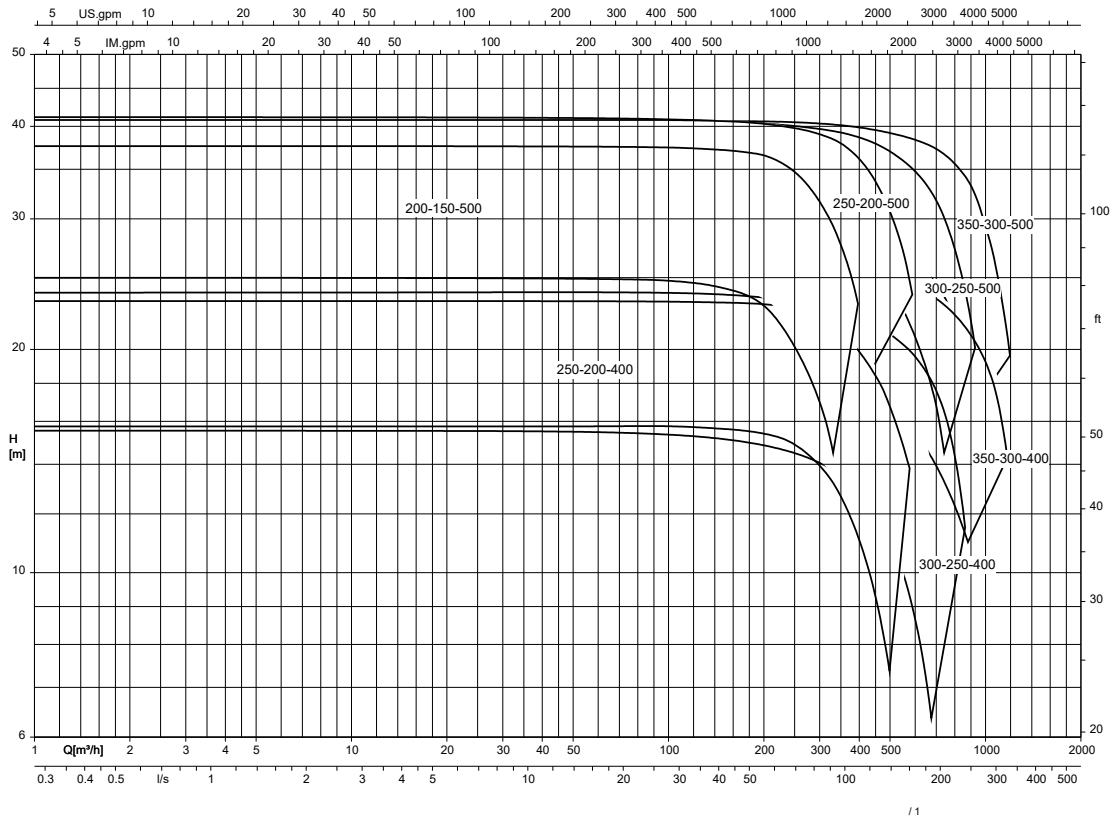

ILNR, n = 1450 rpm

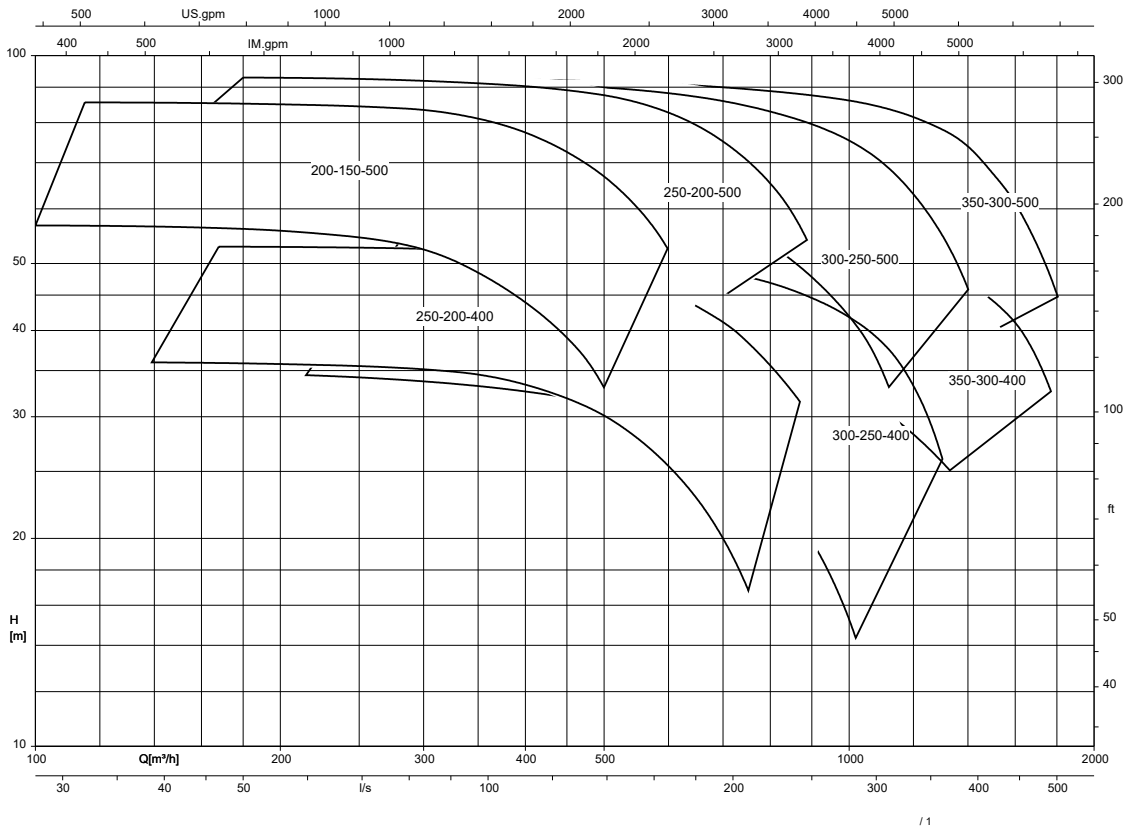

5211.5/03-EN

ILNR, n = 1160 rpm

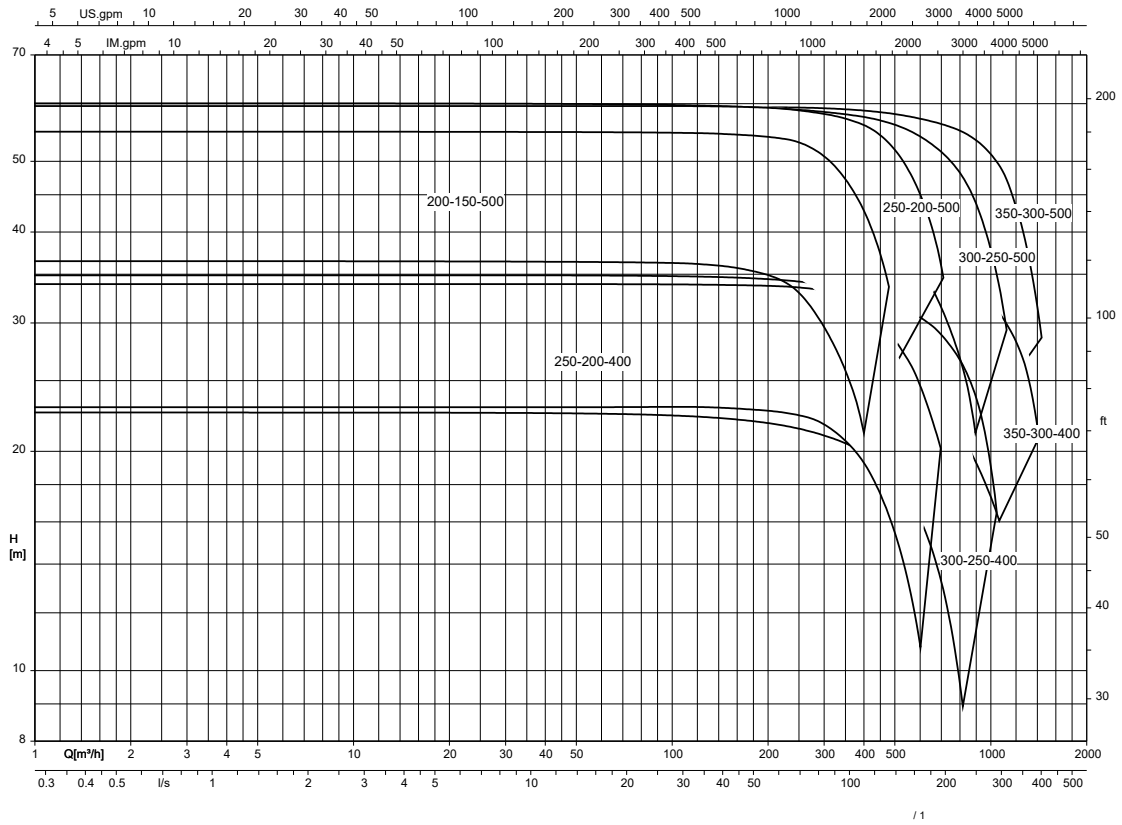

ILNR, n = 1750 rpm

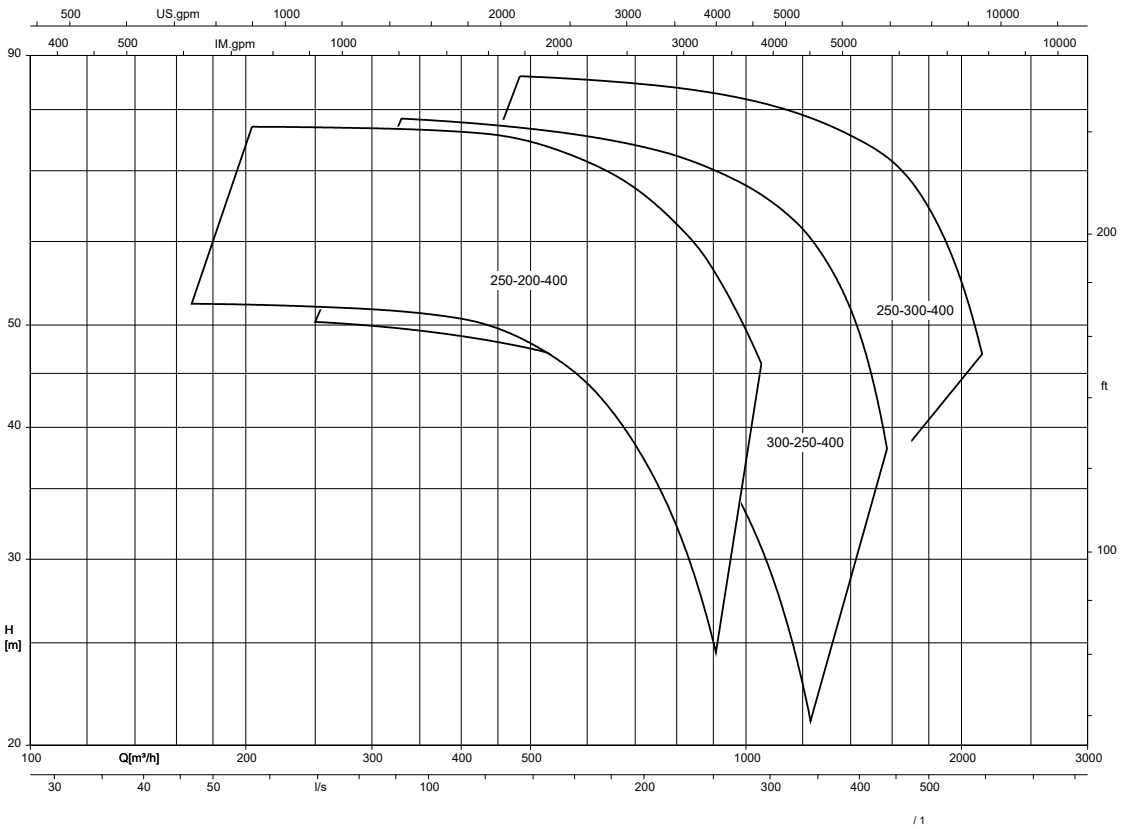

5211.5/03-EN

Dimensions and connections

ILN dimensions

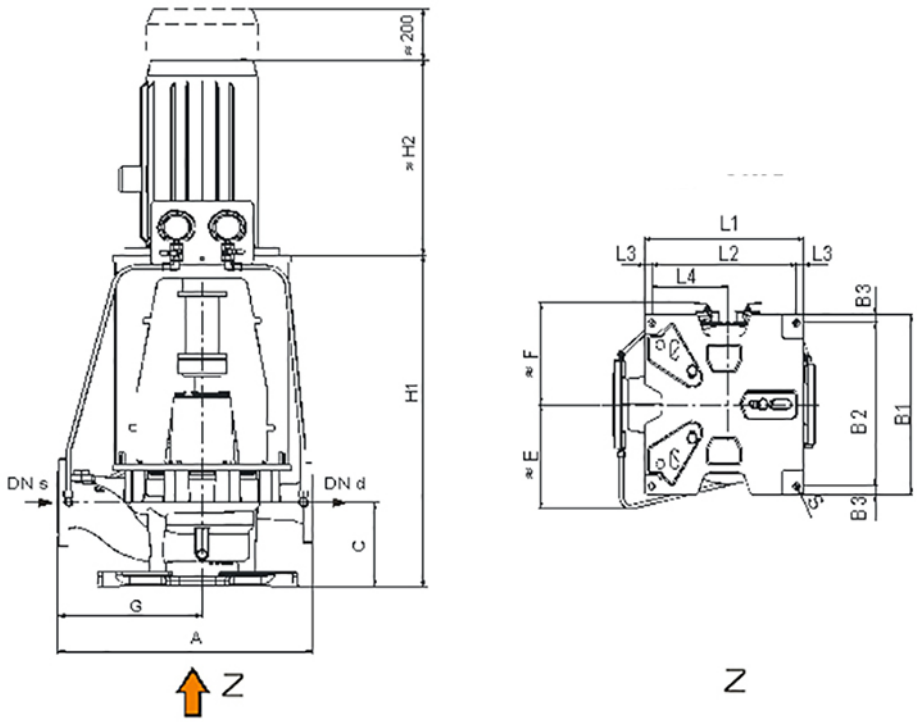

Fig. 1: ILN pump dimensions, sizes 080-065-160 to 200-150-400

ILN pump dimensions, sizes 080-065-160 to 200-150-400

Size	Pump dimensions																	
	DNd[9]	DNs[9]	C	G	A	B1	B2	B3	L1	L2	L3	L4	S	Motor size[10]	E[11]	F	H1	H2
			[mm]												[mm]			
080-065-160	65	80	184	260	460	452	410	21	452	410	21	195	18	100	220	175	756,5	312
														112				333
														132				373

9 EN 1092 PN 10/16 for DN < 150, otherwise PN 10

10 Other sizes on request

11 Dimensions without priming system, for version with auxiliary pump (S) E = F + 270, for version with ejector (E) E = F + 155

Size	Pump dimensions																	
	DNd[9]	DNs[9]	C	G	A	B1	B2	B3	L1	L2	L3	L4	S	Motor size[10]	E[11]	F	H1	H2
			[mm]												[mm]			
080-065-160	65	80	184	260	460	452	410	21	452	410	21	195	18	160	220	175	756,5	478
														180				602
														200		195	771,5	660
080-065-250	65	80	189	300	550	452	410	21	452	410	21	195	18	100	220	225	813	312
														112				333
														132				373
														160				478
														180				602
														200				660
														225				666
														250		275	833	747
														280				820
														315		332,5	858	932
080-065-315	65	80	202	325	605	452	410	21	452	410	21	195	18	160	320	255	786,5	478
														180				602
														200				660
100-080-160	80	100	209	300	525	452	410	21	452	410	21	195	18	100	230	170	781,5	312
														112				333
														132				373
														160				478
														180				602
														200		195	796,5	660
														225		225	866,5	666
100-080-200	80	100	214	325	575	452	410	21	452	410	21	195	18	100	230	195	819	312
														112				333
														132				373
														160				478
														180				602
														200				660
														225		275	849	666
														250				747
														280				820
100-080-250	80	100	199	330	610	452	410	21	452	410	21	195	18	112	230	225	823	333
														132				373
														160			868	478
														180				602
														200			823	660
														225			865	666

Size	Pump dimensions																	
	DNd[9]	DNs[9]	C	G	A	B1	B2	B3	L1	L2	L3	L4	S	Motor size[10]	E[11]	F	H1	H2
			[mm]												[mm]			
100-080-250	80	100	199	330	610	452	410	21	452	410	21	195	18	250	230	275	843	747
														280				820
														315		332,5	868	932
100-080-315	80	100	209	330	645	452	410	21	452	410	21	195	18	180	330	260	793,5	602
														200				660
														225			823,5	666
100-080-400	80	100	214	410	765	452	410	21	452	410	21	195	18	180	330	325	824,5	602
														200				660
														225			854,5	666
														250				747
150-100-250	100	150	239	400	680	452	410	21	452	410	21	195	18	160	360	225	881	478
														180				602
														200				660
150-100-315	100	150	239	400	715	452	410	21	452	410	21	495	18	180	360	260	823,5	602
														200				660
														225			853,5	666
														250		272,5		747
150-100-400	100	150	234	420	775	452	410	21	452	410	21	195	18	225	360	325	895	666
														250				747
														280			915	820
150-125-250	125	150	202	400	755	452	410	21	452	410	21	195	18	132	295	225	896,5	373
														160				478
														180				602
														200				660
														225			936,5	666
150-125-315	125	150	217	400	755	452	410	21	452	410	21	195	18	160	255	265	975	478
														180				602
														200				660
														225		275	1035	666
														250				747
														280				820
150-125-400	125	150	244	450	850	452	410	21	452	410	21	195	18	250	360	325	904,5	747
														280			924,5	820
														315			954,5	932

Size	Pump dimensions																	
	DNd[9]	DNs[9]	C	G	A	B1	B2	B3	L1	L2	L3	L4	S	Motor size[10]	E[11]	F	H1	H2
			[mm]												[mm]			
200-150-250	150	200	284	450[12]	850[13]	452	410	21	452	410	21	195	18	180	315	227,5	1031	602
														200				660
														225			1061	666
														250		225		747
200-150-315	150	200	276	450[12]	850[13]	452	410	21	452	410	21	195	18	200	320	315	1102	660
														225			1132	666
														250				747
														280				820
200-150-400	150	200	239	450[12]	900[14]	452	410	21	452	410	21	195	18	280	315	320	973,8	820
														315			1004	932

12 457 mm for material variant GB / 455 mm for material variant B
13 863 mm for material variant GB / 859 mm for material variant B
14 914 mm for material variant GB / 910 mm for material variant B

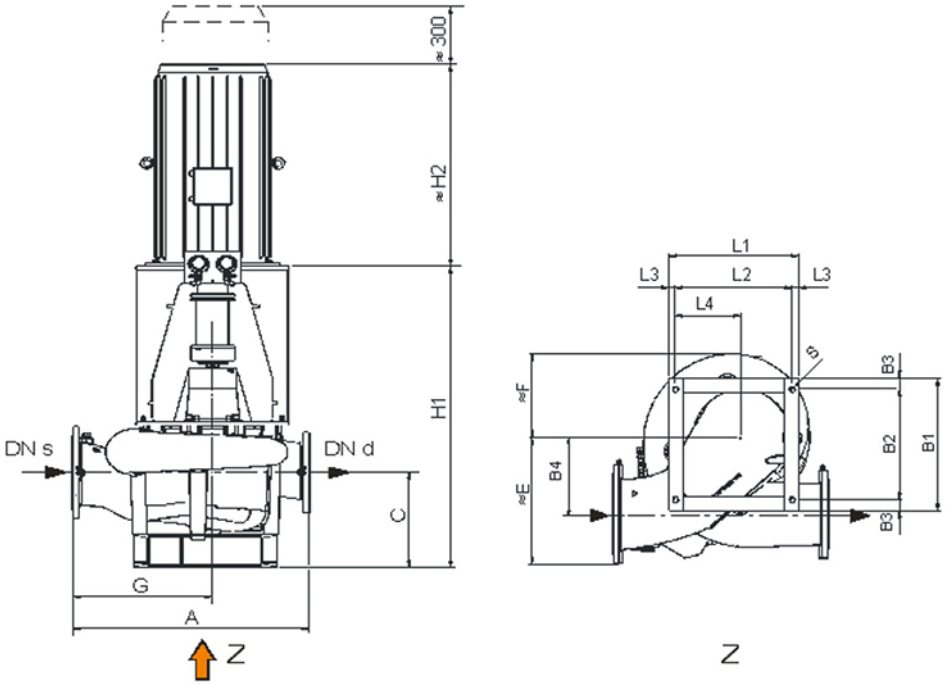

Fig. 2: ILN pump dimensions, sizes 250-200-330 to 300-250-330

ILN pump dimensions, sizes 250-200-330 to 300-250-330

Size	Pump dimensions [mm]																		
	DNd[15]	DNs[15]	C	G	A	B1	B2	B3	B4	L1	L2	L3	L4	S	Motor size[10]	E[11]	F	H1	H2
			[mm]													[mm]			
250-200-330	200	250	380	555[16]	955[17]	620	520	50	315	580	520	30	260	28	225	630	340	1310	666
															250				747
															280				820
															315			1435	932
300-250-330	250	300	460	578[18]	978[19]	600	500	50	345	590	530	30	265	28	280	680	385	1450	820
															315			1515	932

15 EN 1092 PN 10
16 563 mm for material variant GB / 561 mm for material variant B
17 969 mm for material variant GB / 965 mm for material variant B
18 587 mm for material variant GB / 584 mm for material variant B
19 993 mm for material variant GB / 998 mm for material variant B

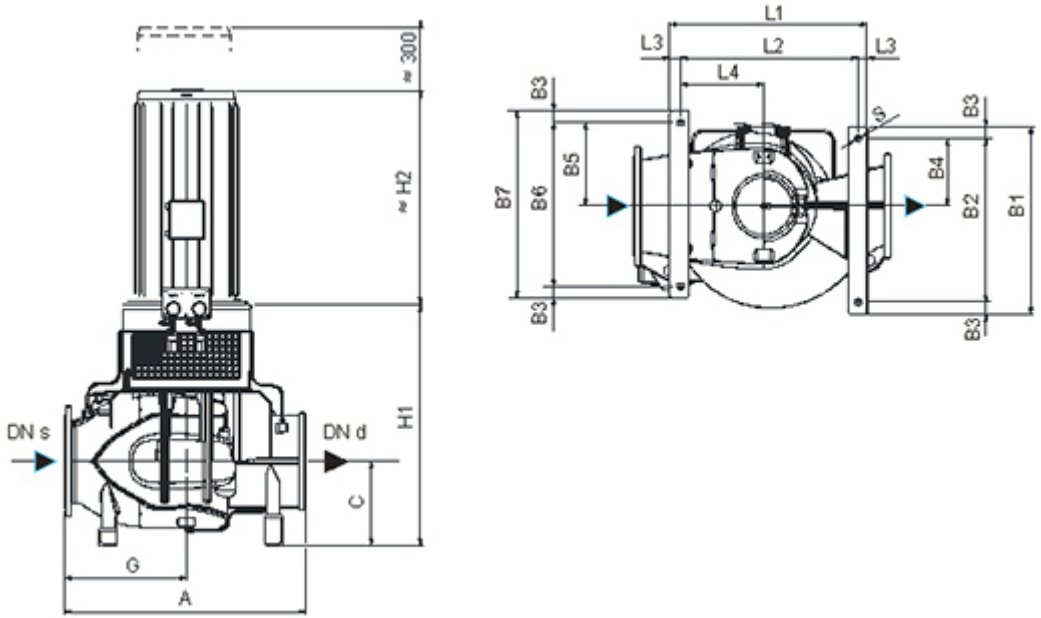

Fig. 3: ILN pump dimensions, sizes 350-300-330 to 450-400-430

ILN pump dimensions, sizes 350-300-330 to 450-400-430

Size	Pump dimensions [mm]																				
	DNd[15]	DNs[15]	C	G	A	B1	B2	B3	B4	B5	B6	B7	L1	L2	L3	L4	L5	S	Motor size[10]	H1	H2
			[mm]																	[mm]	
350-300-330	300	350	392[20]	559[21]	1113[22]	800	700	50	289	357	700	800	845	760	45	355	-	28	280	1100	820
																			315	1130	932
D 350-300-330	300	350	392[20]	559[21]	1113[22]	800	700	50	296	350	-	-	845	760	45	40	760	28	280	1503	820
																			315	1533	932
450-400-430	400	500	580[23]	703[23]	1409[23]	860	760	50	380	480	960	1060	730	610	60	385	-	28	355[24]	1534	1230

20 397 mm for material variant GB / 395 mm for material variant B
21 568 mm for material variant GB / 565 mm for material variant B
22 1131 mm for material variant GB / 1125 mm for material variant B
23 Dimensions for material variant B; the values of other material groups may differ. Request dimension from KSB
24 6-pole motor

ILNC dimensions

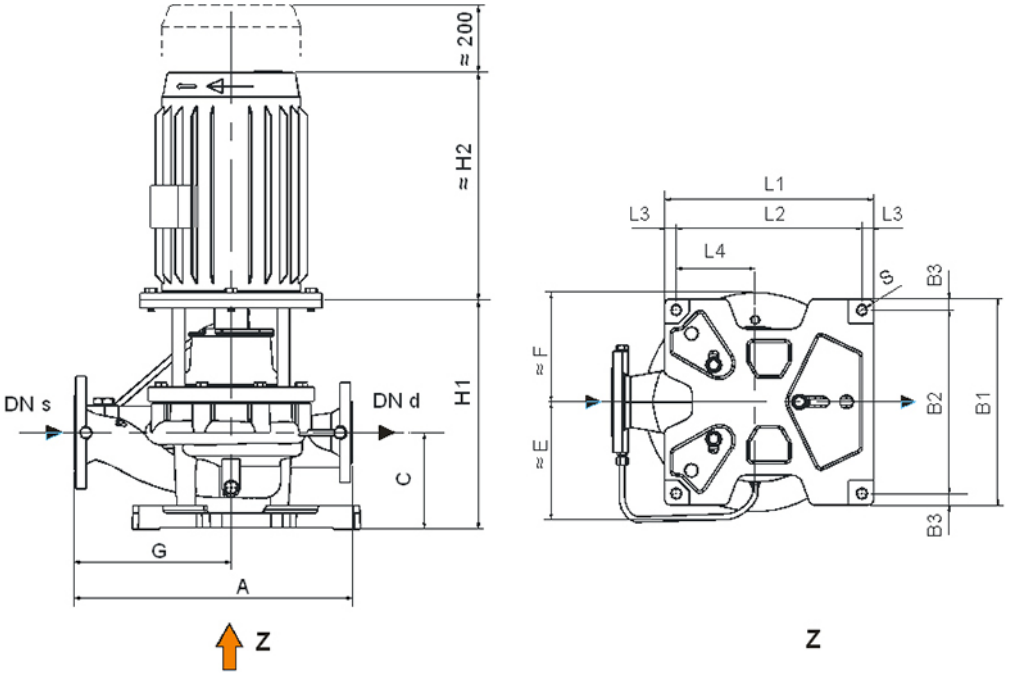

Fig. 4: ILNC pump dimensions

Size	Pump dimensions [mm]																	
	DNd[25]	DNs[25]	C	G	A	B1	B2	B3	L1	L2	L3	L4	S	Motor size[26]	E[27]	F	H1	H2
			[mm]												[mm]			
050-032-160	32	50	141	210	370	377	335	21	377	335	21	168	18	80	200	150	362	234
														90				281
														100				312
														112				333
														132				373
050-032-200	32	50	136	230	410	377	335	21	377	335	21	168	18	80	200	150	354	234
														90				281
														100				312
														112				333

25 EN 1092 PN 10/16 for DN < 150, otherwise PN 10
26 Other sizes on request
27 Dimensions without priming system, for version with auxiliary pump (S) E = F + 270, for version with ejector (E) E = F + 155

Size	Pump dimensions [mm]																	
	DNd[25]	DNs[25]	C	G	A	B1	B2	B3	L1	L2	L3	L4	S	Motor size[26]	E[27]	F	H1	H2
			[mm]												[mm]			
050-032-200	32	50	136	230	410	377	335	21	377	335	21	168	18	132	200	150	354	373
														160		200	409	478
050-032-250	32	50	136	260	485	377	335	21	377	335	21	168	18	80	200	175	364	234
														90				281
														100				312
														112				333
														132				373
														160		200	419	478
														180				602
														200				660
065-040-160	40	65	151	240	400	377	335	21	377	335	21	168	18	80	205	150	373	234
														90				281
														100				312
														112				333
														132				373
														160		200	408	478
065-040-250	40	65	161	290	515	377	335	21	377	335	21	168	18	80	205	175	389	234
														90				281
														100				312
														112				333
														132				373
														160		200	444	478
														180				602
														200				660
065-050-200	50	65	156	260	460	377	335	21	377	335	21	168	18	80	210	150	374	234
														90				281
														100				312
														112				333
														132				373
														160		200	429	478
														180				602
														200				660
														225		225	454	666
080-065-160	65	80	181	260	460	377	335	21	377	335	21	168	18	80	220	150	403	234
														90				281
														100				312
														112				333

Size	Pump dimensions [mm]																	
	DNd[25]	DNs[25]	C	G	A	B1	B2	B3	L1	L2	L3	L4	S	Motor size[26]	E[27]	F	H1	H2
			[mm]												[mm]			
080-065-160	65	80	181	260	460	377	335	21	377	335	21	168	18	132	220	150	403	373
														160		200	438	478
														180				602
														200				660
080-065-250	65	80	186	300	550	377	335	21	377	335	21	168	18	90	220	175	419	281
														100				312
														112				333
														132				373
														160		200	474	478
														180				602
														200				660
														225		225	499	666
080-065-315	65	80	199	325	605	377	335	21	377	335	21	168	18	132	220	200	464	373
														160				478
														180				602
														200			459	660
100-080-160	80	100	206	300	525	377	335	21	377	335	21	168	18	80	230	150	428	234
														90				281
														100				312
														112				333
														132				373
														160		200	463	478
														180				602
														200				660
														225		225	508	666
100-080-200	80	100	211	325	575	377	335	21	377	335	21	168	18	90	230	150	440	281
														100				312
														112				333
														132				373
														160		200	495	478
														180				602
														200				660
														225		225	520	666
100-080-250	80	100	196	330	610	377	335	21	377	335	21	168	18	90	230	175	429	281
														100				312
														112				333
														132				373

Size	Pump dimensions [mm]																	
	DNd[25)]	DNs[25)]	C	G	A	B1	B2	B3	L1	L2	L3	L4	S	Motor size[26)]	E[27)]	F	H1	H2
			[mm]												[mm]			
100-080-250	80	100	196	330	610	377	335	21	377	335	21	168	18	160	230	200	484	478
														180				602
														200				660
														225		225	509	666
100-080-315	80	100	209	330	645	377	335	21	377	335	21	168	18	160	230	200	474	478
														180				602
														200			469	660
														225		225	524	666
150-100-250	100	150	239	400	680	377	335	21	377	335	21	168	18	132	255	175	481	373
														160		200	525	478
														180				602
														200				660
150-100-315	100	150	239	400	715	377	335	21	377	335	21	168	18	160	260	200	504	478
														180				602
														200			499	660
														225		225	554	666
150-125-250	125	150	199	40	755	377	335	21	377	335	21	168	18	132	260	175	489	373
														160		200	534	478
														180				602
														200				660
														225		225	559	666

ILNR dimensions

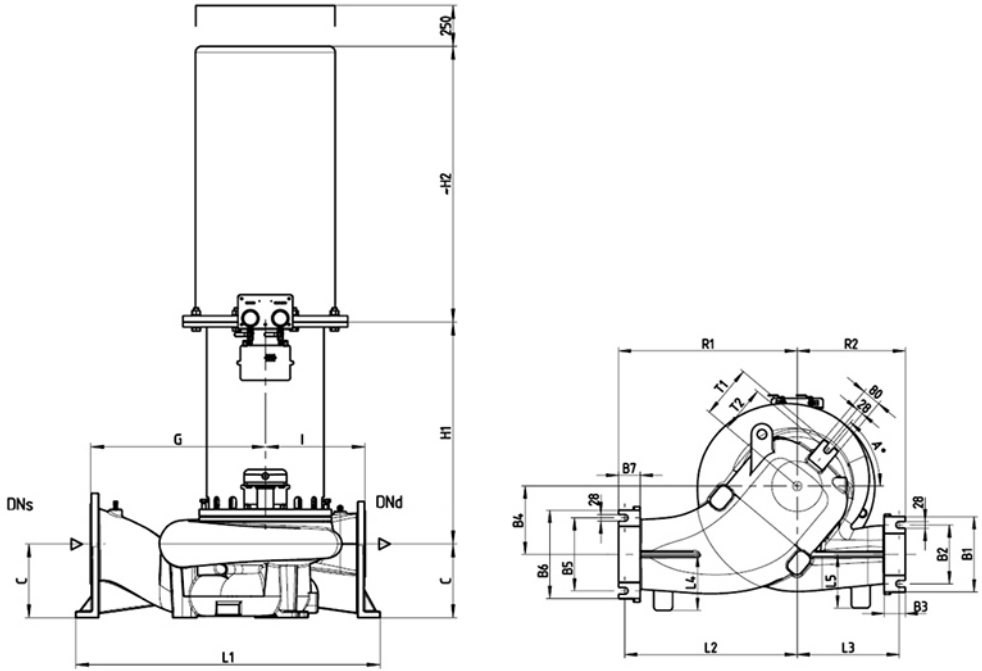

Fig. 5: ILNR pump dimensions

ILNR pump dimensions

Size	Pump dimensions [mm]																								
	DNd[28)]	DNs[28)]	C	G	I	B1	B2	B3	B4	B5	B6	B7	L1	L2	L3	L4	L5	R1	R2	T1	T2	A	Motor size	H1	H2
			[mm]																					[mm]	
200-150-500	150	200	280	650	450	260	190	86	315	250	320	90	1220	684	484	203	190	710	510	207	182	50	200	828	669
																							225	862	692
																							250		770
																							280		825
																							315	888	1038
250-200-400	250	200	295	700	400	320	250	90	290	310	375	92	1220	734	434	238	228	760	460	225	199	50	200	828	669
																							225	858	692
																							250		770
																							280		825

28 EN 1092 PN 10/16 for DN < 150, otherwise PN 10

Size	Pump dimensions [mm]																								
	DNd[28)]	DNs[28)]	C	G	I	B1	B2	B3	B4	B5	B6	B7	L1	L2	L3	L4	L5	R1	R2	T1	T2	A	Motor size	H1	H2
			[mm]																					[mm]	
250-200-400	250	200	295	700	400	320	250	90	290	310	375	92	1220	734	434	238	228	760	460	225	199	50	315	888	1038
250-200-500	200	250	295	650	450	320	250	90	387	310	375	92	1120	684	484	228	215	710	510	212	186	62	225	862	669
																							250		770
																							280		825
																							315	888	1038
300-250-400	250	300	355	750	450	380	310	93	325	360	430	92	1320	784	484	265	252	810	510	255	229	50	200	828	669
																							225	858	692
																							250		770
																							280		825
																							315	888	1038
300-250-500	250	300	360	800	500	375	310	92	425	360	430	92	1420	834	534	258	245	860	560	231	204	55	250	862	770
																							280		825
																							315	888	1038
350-300-400	300	350	410	800	500	430	360	92	425	420	490	96	1420	834	534	278	265	860	560	245	219	54	250	858	770
																							280		825
																							315	888	1038
350-300-500	300	350	395	800	500	430	360	93	450	420	490	96	1300	725	429	263	250	860	560	255	229	54	250	862	770
																							280		825
																							315	888	1038
																							355	928	1349

Pump connections

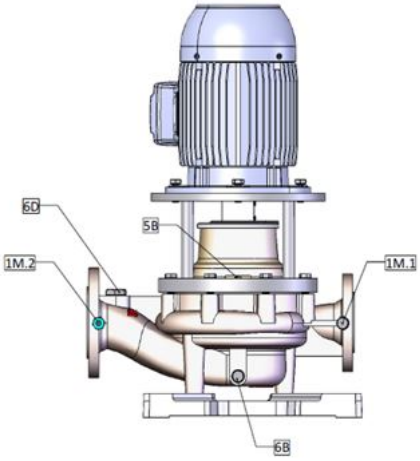

Fig. 6: Connections

Pump connections

Connection	Thread	Description
1M.1	G 1/4	Pressure gauge
6B	G 1/4	Fluid drain
5B	G 1/4	Vent, mechanical seal chamber
1M.2	G 1/4	Pressure gauge (optional)
6D	G 3/4	Venting / priming

Flange design

Flange design by materials

Material	Suction side DN_1	Discharge side DN_2	Pressure class
GB	EN 1092-2	EN 1092-2	≤ DN 150: PN 16 > DN 150: PN 10
B	EN 1092-3	EN 1092-3	
AB	EN 1092-3	EN 1092-3	
D1	EN 1092-1	EN 1092-1	
D2	EN 1092-1	EN 1092-1	

Recommended spare parts stock

Recommended spare parts stock for continuous operation of the pump

Spare parts for commissioning/start-up

Part No.	Description	Quantity
400[29]	Gasket	1
411[30]	Joint ring	1
412	O-ring	1
433	Mechanical seal	1

Spare parts for 2 years' operation

Part No.	Description	Quantity
320[30]	Rolling element bearing	1
321	Radial ball bearing	1
400[29]	Gasket	2
411[30]	Joint ring	2
412	O-ring	2
433	Mechanical seal	2
502	Casing wear ring	1
507	Thrower	1
523[30][31]	Shaft sleeve	1
531[30][31]	Locking sleeve	1
545[30][31]	Bearing bush	1
860	Coupling part	1
932[30]	Circlip	1
940	Key	1

Large set of spare parts for 5 years' operation (in addition to those for commissioning/start-up and 2 years' operation)

Part No.	Description	Quantity
210	Shaft	1
230	Impeller	1
320[30]	Rolling element bearing	2
321	Radial ball bearing	2
400[29]	Gasket	5
411[30]	Joint ring	5
412	O-ring	5
433	Mechanical seal	3
502	Casing wear ring	2
507	Thrower	2
523[30]	Shaft sleeve	2
531[30]	Locking sleeve	2
545[30][31]	Bearing bush	2
840[32]	Coupling	1
860	Coupling part	2
922	Impeller nut	2
932[30]	Circlip	2
940	Key	2

Additionally recommended spare parts for auxiliary vacuum pump (design variants ILNS and ILNCS)

Spare parts for commissioning/start-up

Part No.	Description	Quantity
400	Gasket	1
411	Joint ring	1
412	O-ring	1
433	Mechanical seal	1

Spare parts for 2 years' operation

Part No.	Description	Quantity
400	Gasket	2
411	Joint ring	2
412	O-ring	2
433	Mechanical seal	2
740	Valve	1
759	Valve disc	1
901	Hexagon head bolt	1
940	Key	1

Spare parts for 5 years' operation

Part No.	Description	Quantity
740	Valve	2
759	Valve disc	2
230	Impeller	1
400	Gasket	5
411	Joint ring	5
412	O-ring	5
433	Mechanical seal	3
901	Hexagon head bolt	2
940	Key	2

29 For design variant ILNR only
30 For design variant ILN/ILNC only
31 For double-suction design only
32 For design variant ILN only

5211.5/03-EN

General assembly drawings with list of components

Drawing number assigned to pump sizes

Pump type	Size	General assembly drawing						
		1	2	3	4	5	6	7
ILN	080-065-160	✓	–	–	–	–	–	–
	080-065-250	✓	–	–	–	–	–	–
	080-065-315	–	✓	–	–	–	–	–
	100-080-160	✓	–	–	–	–	–	–
	100-080-200	✓	–	–	–	–	–	–
	100-080-250	✓	–	–	–	–	–	–
	100-080-315	–	✓	–	–	–	–	–
	100-080-400	–	✓	–	–	–	–	–
	150-100-250	✓	–	–	–	–	–	–
	150-100-315	–	✓	–	–	–	–	–
	150-100-400	–	✓	–	–	–	–	–
	150-125-250	✓	–	–	–	–	–	–
	150-125-315	✓	–	–	–	–	–	–
	150-125-400	–	✓	–	–	–	–	–
	200-150-250	✓	–	–	–	–	–	–
	200-150-315	–	✓	–	–	–	–	–
	200-150-400	–	✓	–	–	–	–	–
	250-200-330	–	✓	–	–	–	–	–
	300-250-330	–	✓	–	–	–	–	–
	350-300-330	–	–	✓	–	–	–	–
	500-400-430	–	–	✓	–	–	–	–
ILNC	050-032-160	–	–	–	✓	–	–	–
	050-032-200	–	–	–	✓	–	–	–
	050-032-250	–	–	–	✓	–	–	–
	065-040-160	–	–	–	✓	–	–	–
	065-040-250	–	–	–	✓	–	–	–
	065-050-200	–	–	–	✓	–	–	–
	080-065-160	–	–	–	✓	–	–	–
	080-065-250	–	–	–	✓	–	–	–
	080-065-315	–	–	–	–	✓	–	–
	100-080-160	–	–	–	✓	–	–	–
	100-080-200	–	–	–	✓	–	–	–
	100-080-250	–	–	–	✓	–	–	–
	100-080-315	–	–	–	–	✓	–	–
	150-100-250	–	–	–	✓	–	–	–
	150-100-315	–	–	–	–	✓	–	–
	150-125-250	–	–	–	✓	–	–	–
ILNR	200-150-500	–	–	–	–	–	✓	✓
	250-200-400	–	–	–	–	–	✓	✓
	250-200-500	–	–	–	–	–	✓	✓
	300-250-400	–	–	–	–	–	✓	✓
	300-250-500	–	–	–	–	–	✓	✓
	350-300-400	–	–	–	–	–	✓	✓
	350-300-500	–	–	–	–	–	✓	✓

5211.5/03-EN

General assembly drawing 1 ILN

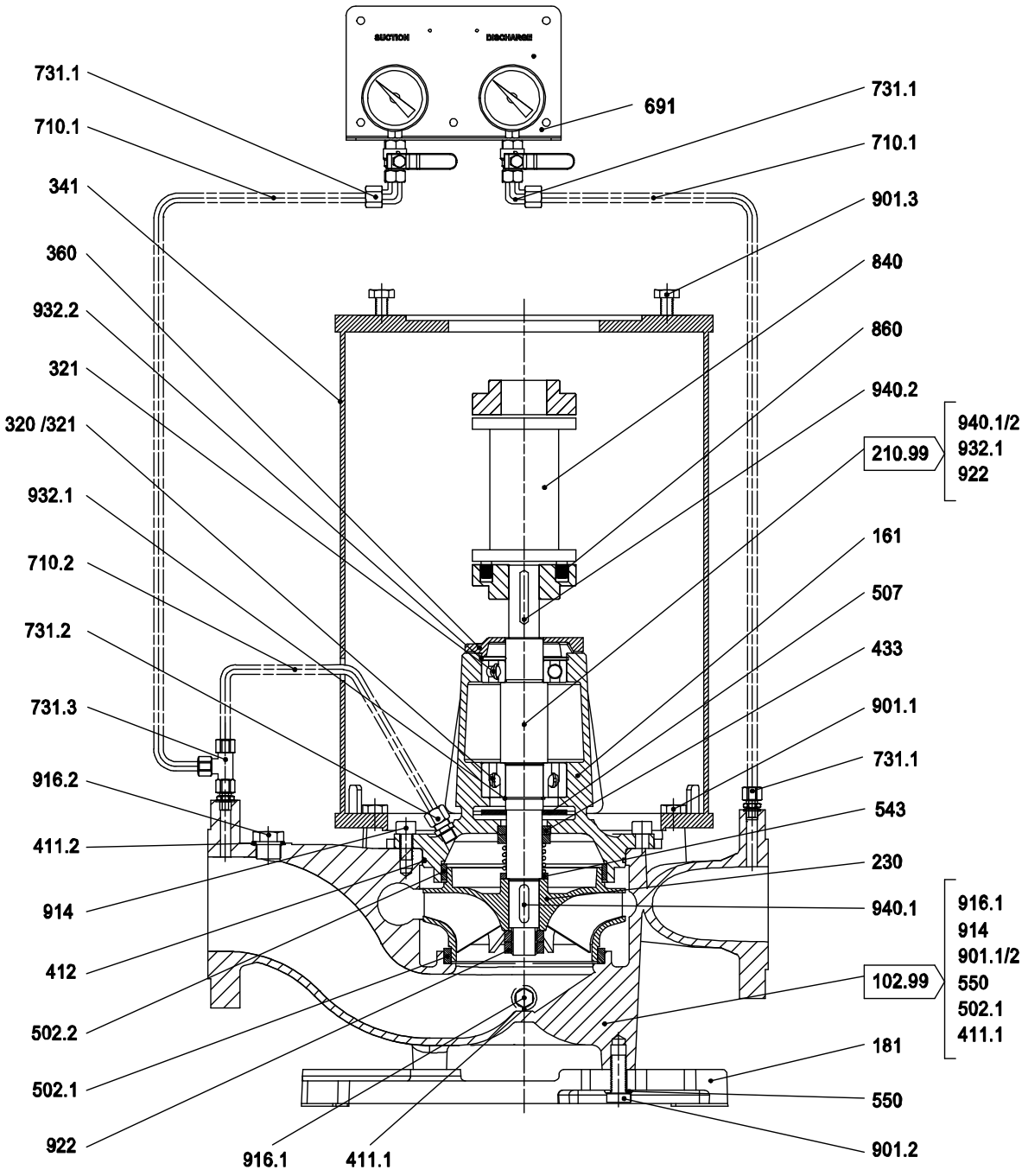

Fig. 7: General assembly drawing 1 ILN

List of components

Part No.	Description	Part No.	Description
102	Volute casing	543[33)]	Spacer bush
161	Casing cover	550	Washer
181	Pump stool	691	Pressure gauge
210	Shaft	710.1/.2	Pipe
230	Impeller	731.1/.2/.3[34)]	Pipe union

33 Not on all versions
34 Not for ILNE and ILNS

Part No.	Description	Part No.	Description
320[35)]	Rolling element bearing	840	Coupling
321[35)]	Radial ball bearing	860	Coupling part
341	Drive lantern	901.1/.2/.3	Hexagon head bolt
360	Bearing cover	914	Hexagon socket head cap screw
411.1/.2[34)]	Joint ring	916.1/.2[34)]	Plug
412	O-ring	922	Impeller nut
433	Mechanical seal	932.1/.2	Circlip
502.1/.2	Casing wear ring	940.1/.2	Key
507	Thrower		

The relevant version is indicated in the product literature supplied.

35 Bearing design depending on motor size

General assembly drawing 2 ILN

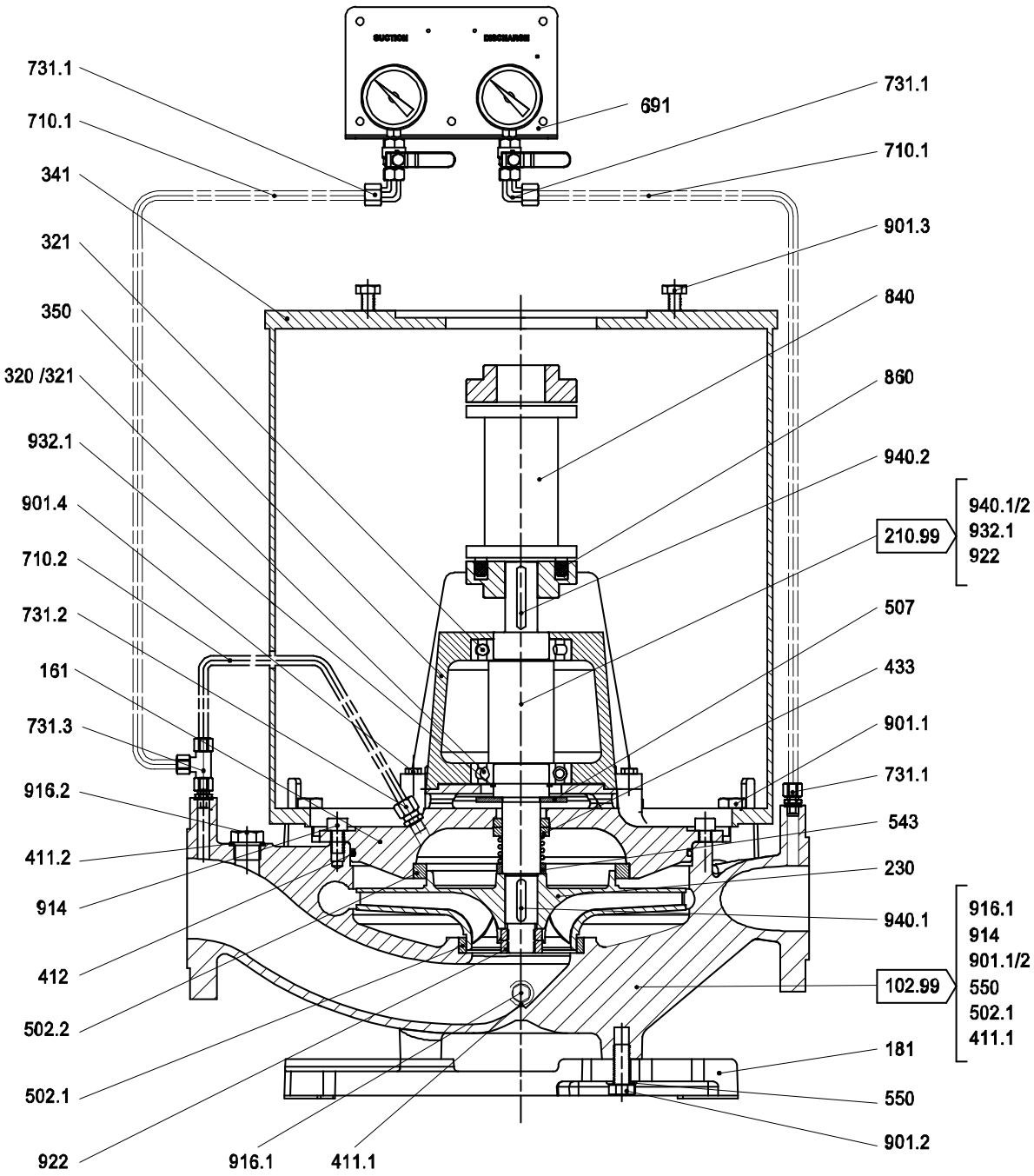

Fig. 8: General assembly drawing 2 ILN

List of components

Part No.	Description	Part No.	Description
102	Volute casing	543[36)]	Spacer bush
161	Casing cover	550	Washer
181	Pump stool	691	Pressure gauge
210	Shaft	710.1/.2	Pipe
230	Impeller	731.1/.2/.3[37)]	Pipe union

36 Not on all versions
37 Not for ILNE and ILNS

Part No.	Description	Part No.	Description
320[38)]	Rolling element bearing	840	Coupling
321[38)]	Radial ball bearing	860	Coupling part
341	Drive lantern	901.1/.2/.3/.4	Hexagon head bolt
350	Bearing housing	914	Hexagon socket head cap screw
411.1/.2[37)]	Joint ring	916.1/.2[37)]	Plug
412	O-ring	922	Impeller nut
433	Mechanical seal	932.1/.2	Circlip
502.1/.2	Casing wear ring	940.1/.2	Key
507	Thrower		

The relevant version is indicated in the product literature supplied.

38 Bearing design depending on motor size

General assembly drawing 3 ILN

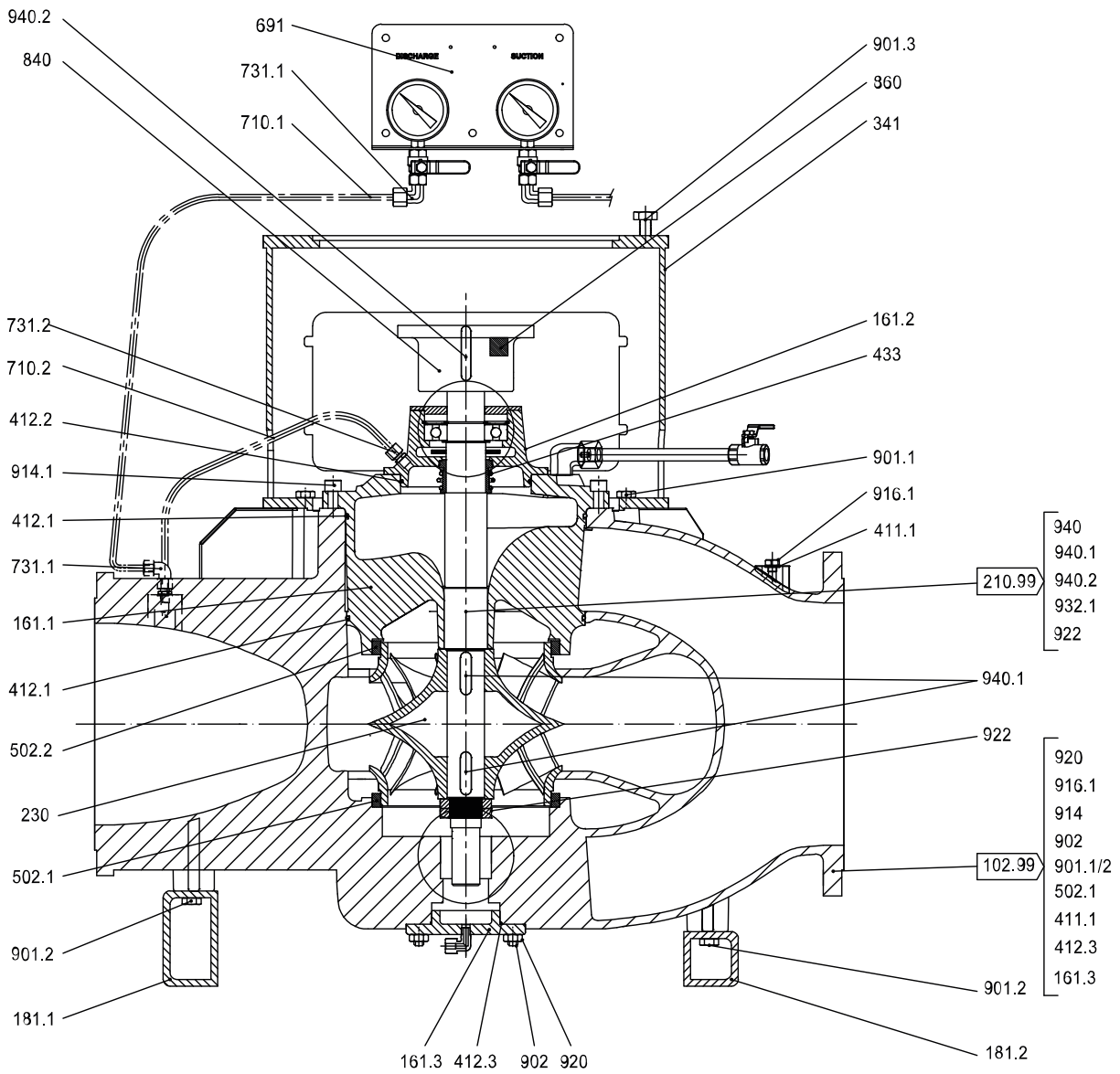

Fig. 9: General assembly drawing 3 ILN

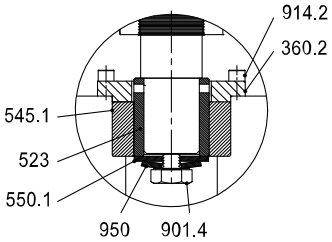

Bearing bush ILN 300-330

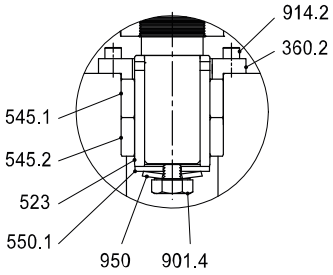

Bearing bush ILN 400-430

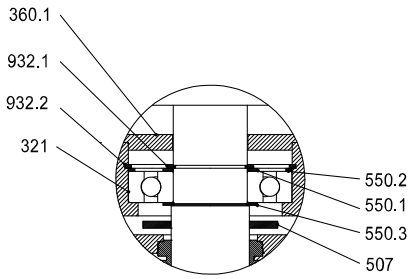

Detailed view of bearing assembly

List of components

Part No.	Description	Part No.	Description
102	Volute casing	550.1/.2/.3	Washer
161.1/.2/.3	Casing cover	691	Pressure gauge
181.1/.2	Pump stool	710.1/.2	Pipe
210	Shaft	731.1/.2/.3	Pipe union

5211.5/03-EN

Part No.	Description	Part No.	Description
230	Impeller	840	Coupling
321	Radial ball bearing	860	Coupling part
341	Drive lantern	901.1/.2/.3/.4	Hexagon head bolt
360.1/.2	Bearing cover	902	Stud
411.1	Joint ring	914.1/.2	Hexagon socket head cap screw
412.1/.2/.3	O-ring	916.1	Plug
433	Mechanical seal	920	Nut
502.1/.2	Casing wear ring	922	Impeller nut
507	Thrower	932.1/.2	Circlip
523	Shaft sleeve	940.1/.2	Key
545.1/.2	Bearing bush	950	Spring

5211.5/03-EN

General assembly drawing 4 ILNC

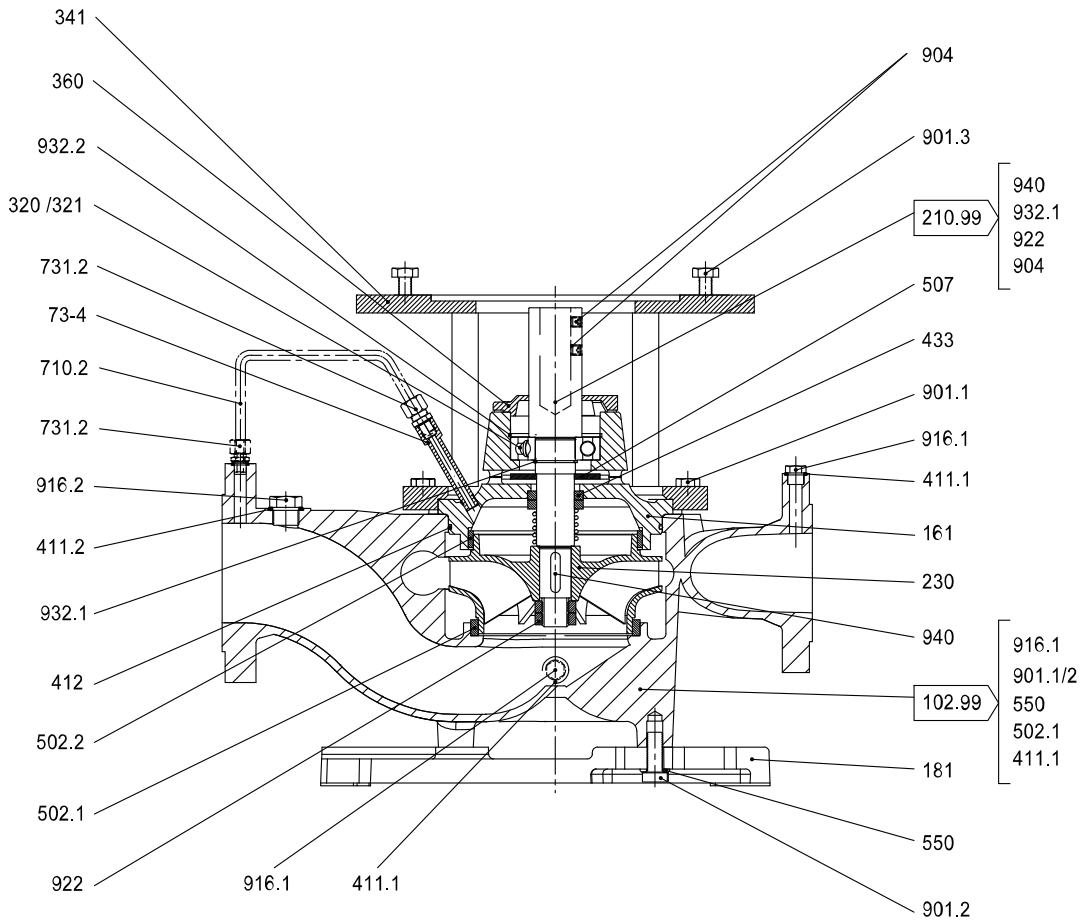

Fig. 10: General assembly drawing 4 ILNC

List of components

Part No.	Description	Part No.	Description
102	Volute casing	502.1/.2	Casing wear ring
161	Casing cover	507	Thrower
181	Pump stool	550	Washer
210	Shaft	710.2	Pipe
230	Impeller	73-4[39)]	Barrel nipple
320[40)]	Rolling element bearing	731.2	Pipe union
321[40)]	Radial ball bearing	901.1/.2/.3	Hexagon head bolt
341	Drive lantern	904	Grub screw
360	Bearing cover	916.1/.2[41)]	Plug
411.1/.2[41)]	Joint ring	922	Impeller nut
412	O-ring	932.1/.2	Circlip
433	Mechanical seal	940	Key

The relevant version is indicated in the product literature supplied.

5211.5/03-EN

39 Not on all versions
40 Bearing design depending on motor size
41 Not for ILNCE and ILNCS

General assembly drawing 5 ILNC

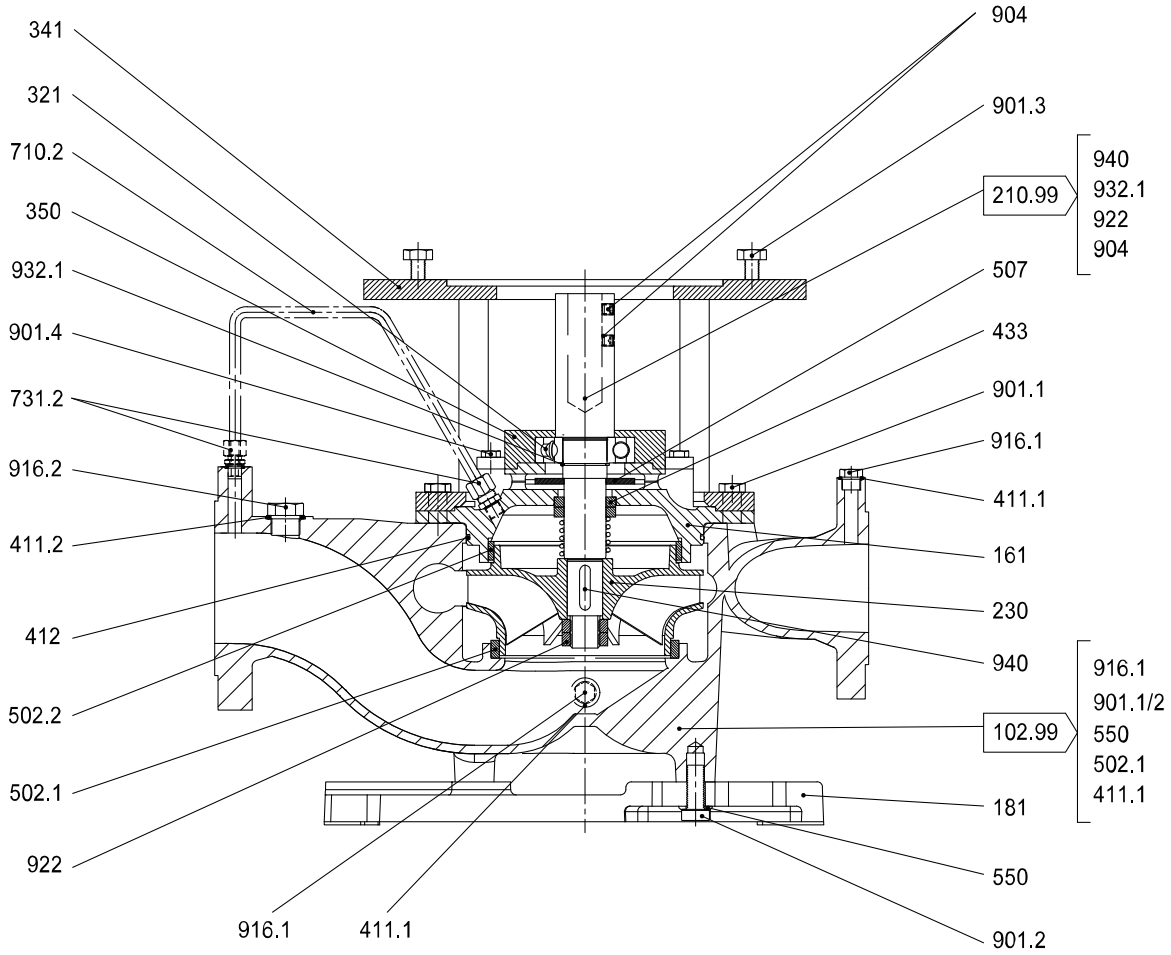

Fig. 11: General assembly drawing 5 ILNC

List of components

Part No.	Description	Part No.	Description
102	Volute casing	502.1/.2	Casing wear ring
161	Casing cover	507	Thrower
181	Pump stool	550	Washer
210	Shaft	710.2	Pipe
230	Impeller	731.2	Pipe union
321	Radial ball bearing	901.1/.2/.3/.4	Hexagon head bolt
341	Drive lantern	904	Grub screw
350	Bearing housing	916.1/.2[42)]	Plug
411.1/.2[42)]	Joint ring	922	Impeller nut
412	O-ring	932.1/.2	Circlip
433	Mechanical seal	940	Key

42 Not for ILNCE and ILNCS

General assembly drawing 6 ILNR

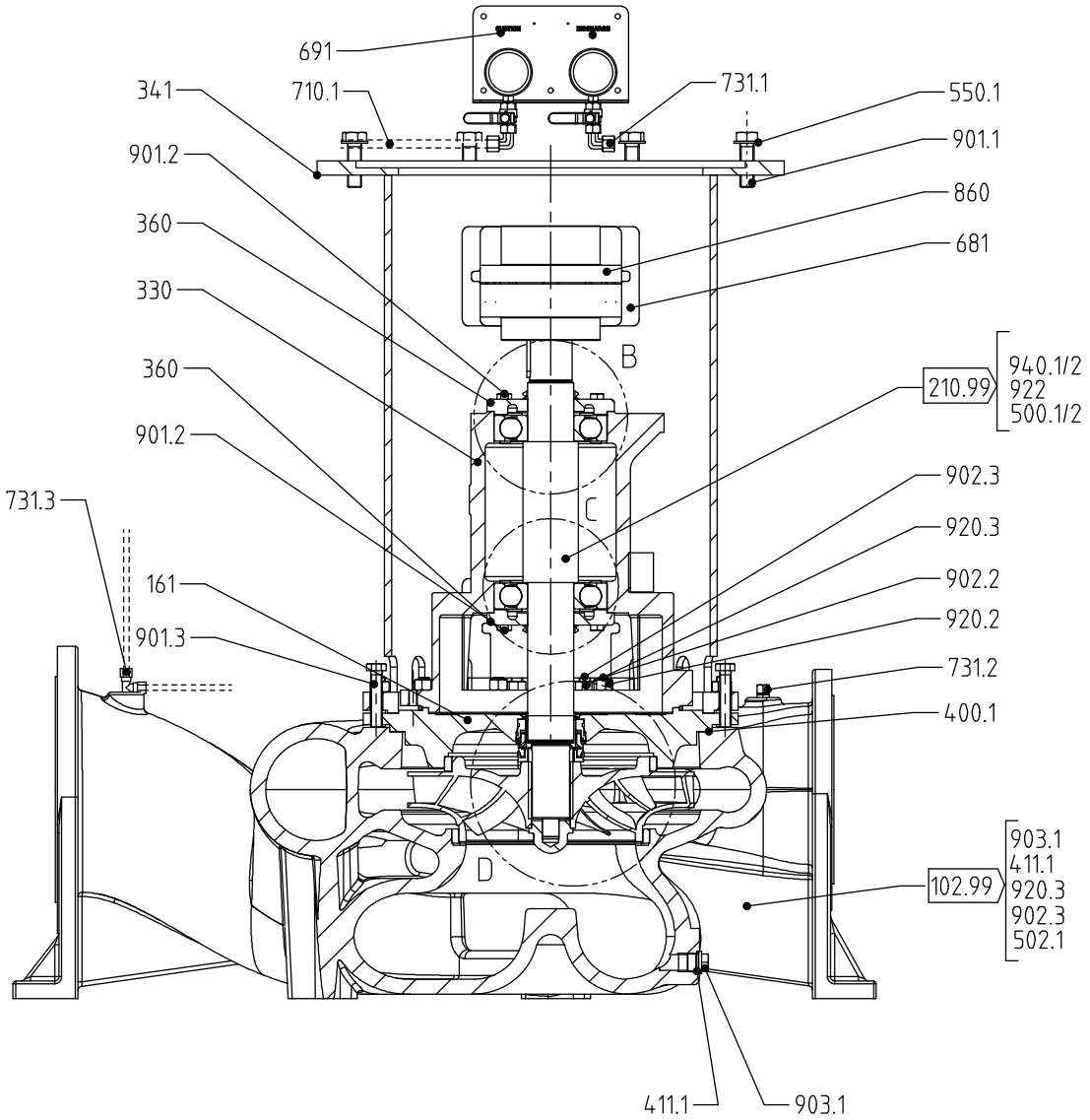

Fig. 12: General assembly drawing 6 ILNR

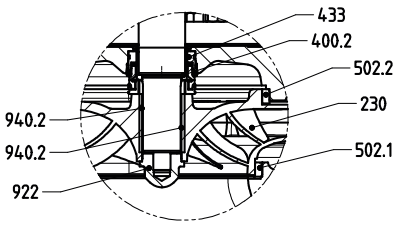

Detailed view of hydraulic system

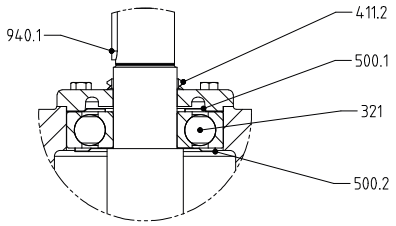

Detailed view of radial ball bearing B

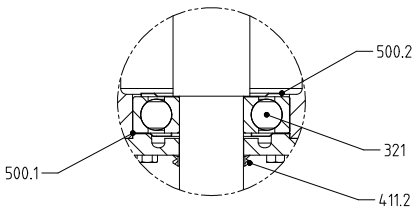

Detailed view of radial ball bearing C

List of components

Part No.	Description	Part No.	Description
102	Volute casing	550	Washer
161	Casing cover	681	Coupling guard
210	Shaft	691	Pressure gauge
230	Impeller	710.1	Pipe
321	Radial ball bearing	731.1/.2/.3	Pipe union
330	Bearing bracket	860	Coupling part
341	Drive lantern	901.1/.2/.3	Hexagon head bolt

Part No.	Description	Part No.	Description
360	Bearing cover	902.2/.3	Stud
400.1/.2	Gasket	903.1	Screw plug
411.1/.2	Joint ring	920.2/.3	Nut
433	Mechanical seal	922	Impeller nut
500.1/.2	Ring	940.1/.2	Key
502.1/.2	Casing wear ring		

General assembly drawing 7 ILNR, reinforced version

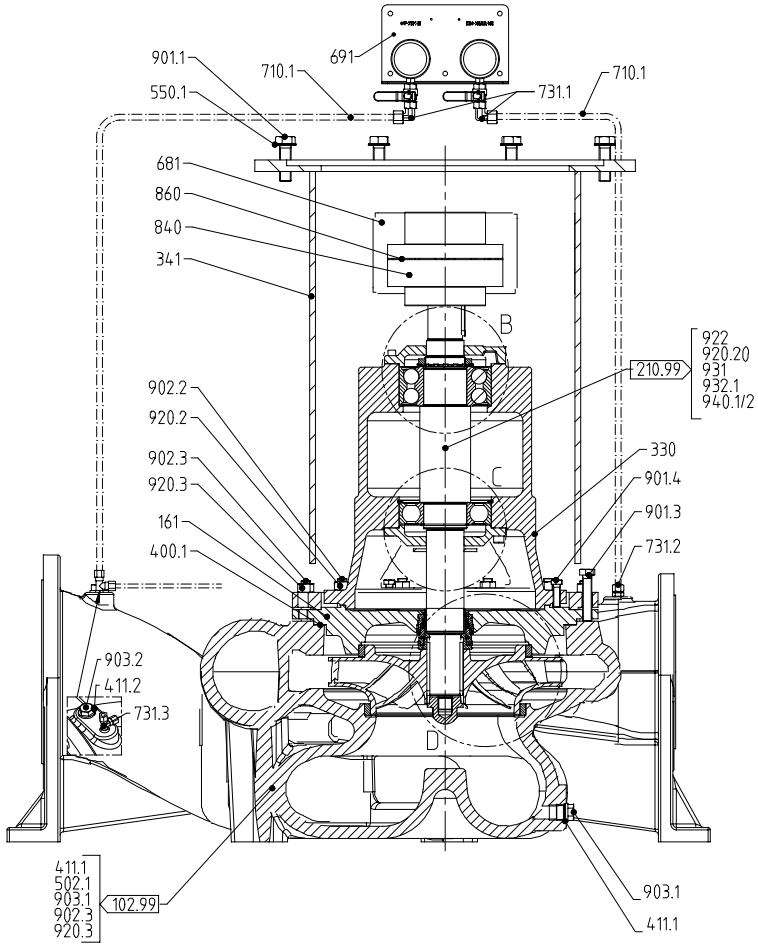

Fig. 13: General assembly drawing 7 ILNR, reinforced version

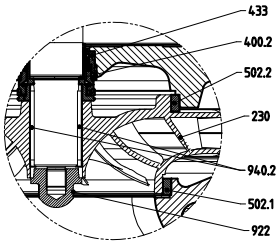

Detailed view of hydraulic system

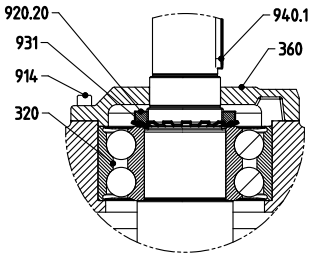

Detailed view of radial ball bearing B

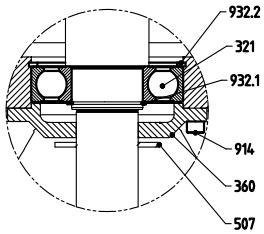

Detailed view of radial ball bearing C

List of components

Part No.	Description	Part No.	Description
102	Volute casing	681	Coupling guard
161	Casing cover	691	Pressure gauge
210	Shaft	710.1	Pipe
230	Impeller	731.1/.2/.3[43)]	Pipe union
320	Rolling element bearing	840	Coupling
321	Radial ball bearing	860	Coupling part
330	Bearing bracket	901.1/.3/.4	Hexagon head bolt
341	Drive lantern	902.2/.3	Stud
360	Bearing cover	903.1/.2[43)]	Screw plug

43 Not for ILNRE and ILNRS

5211.5/03-EN

Part No.	Description	Part No.	Description
400.1/.2	Gasket	914	Hexagon socket head cap screw
411.1/.2[43)]	Joint ring	920.2/.3/.20	Nut
433	Mechanical seal	922	Impeller nut
502.1/.2	Casing wear ring	931	Lock washer
507	Thrower	932.1/.2	Circlip
550.1	Washer	940.1/.2	Key

General assembly drawing of priming system with auxiliary pump ILNS/ILNCS

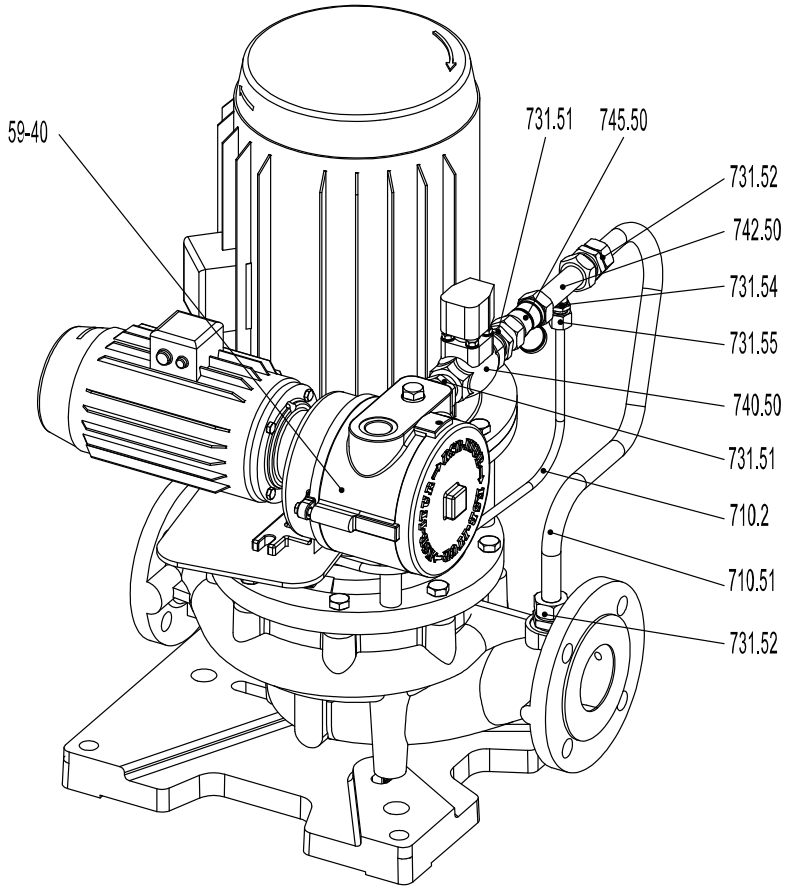

Fig. 14: General assembly drawing of venting system with auxiliary pump ILNS/ILNCS

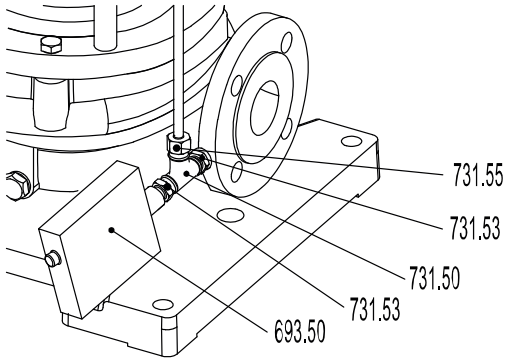

Connection of pressure controller at discharge nozzle of ILNS

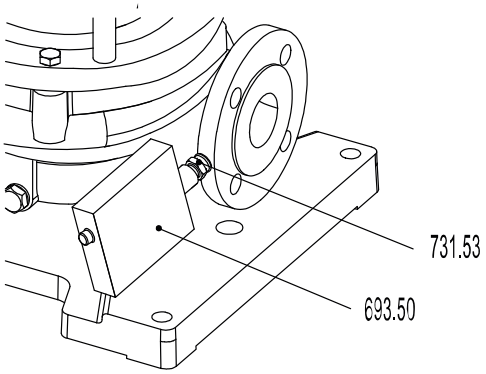

Connection of pressure controller at discharge nozzle of ILNCS

List of components

Part No.	Description	Part No.	Description
59-40	Auxiliary pump:	740.50	Valve
693.50	Pressure controller	742.50	Check valves
710.2/.51	Pipe	745.50	Filter
731.2/.50/.51/.52/.53/.54/.55	Pipe union		

General assembly drawing, priming system with ejector, ILNE/ILNCE

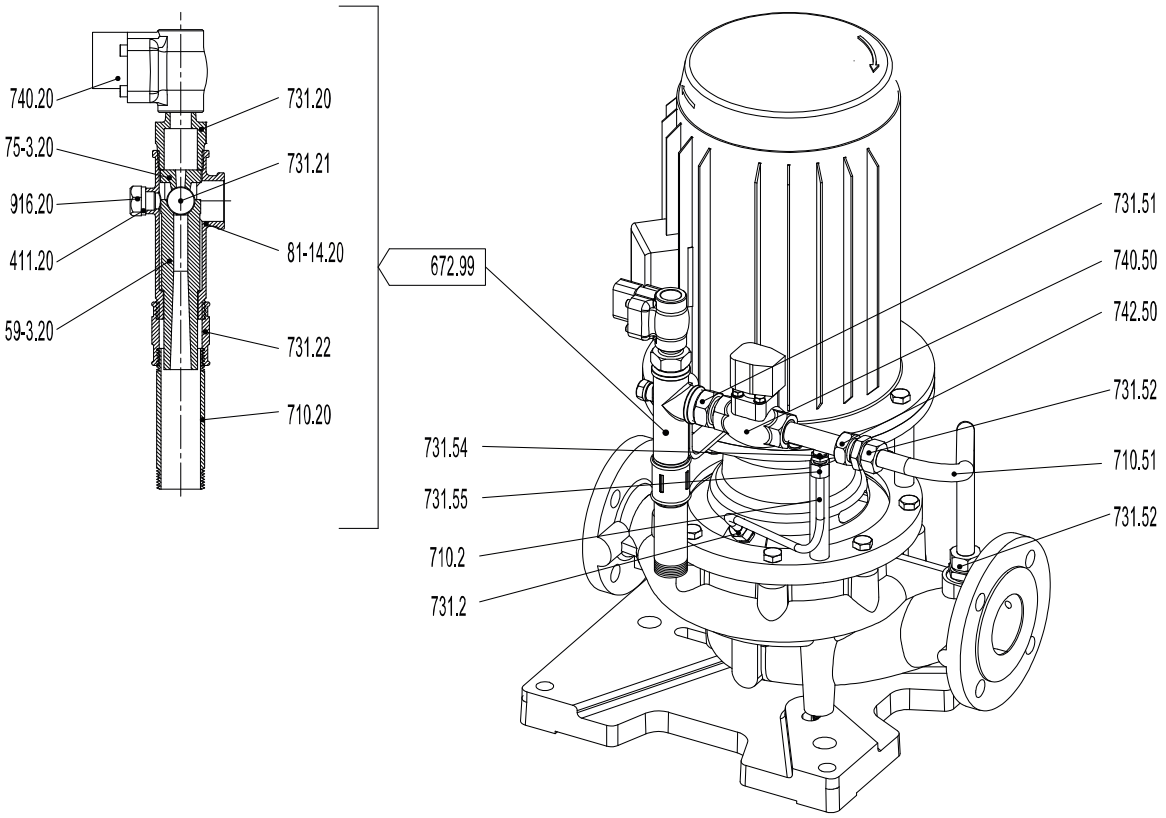

Fig. 15: General assembly drawing, venting system with ejector, ILNE/ILNCE

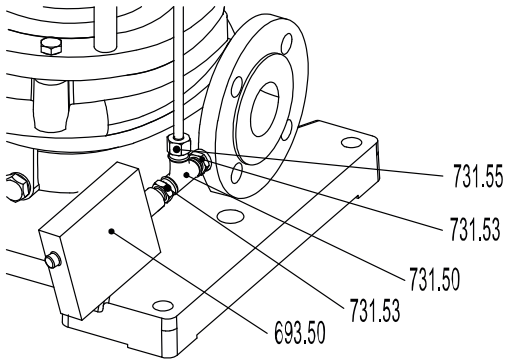

Connection of pressure controller at discharge nozzle of ILNE

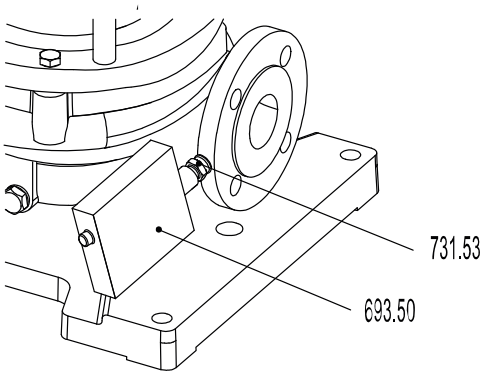

Connection of pressure controller at discharge nozzle of ILNCE

5211.5/03-EN

List of components

Part No.	Description	Part No.	Description
411.20	Joint ring	740.20/.50	Valve
59-3.20	Cylinder	742.50	Check valves
672	Venting device	75-3.20	Nozzle

Part No.	Description	Part No.	Description
693.50	Pressure controller	81-14.20	Collector
710.2/.20/.51	Pipe	916.20	Plug
731.2/.20/.21/.22/.50/.51/.52/.53/.54/.55	Pipe union		

Exploded view, auxiliary pump

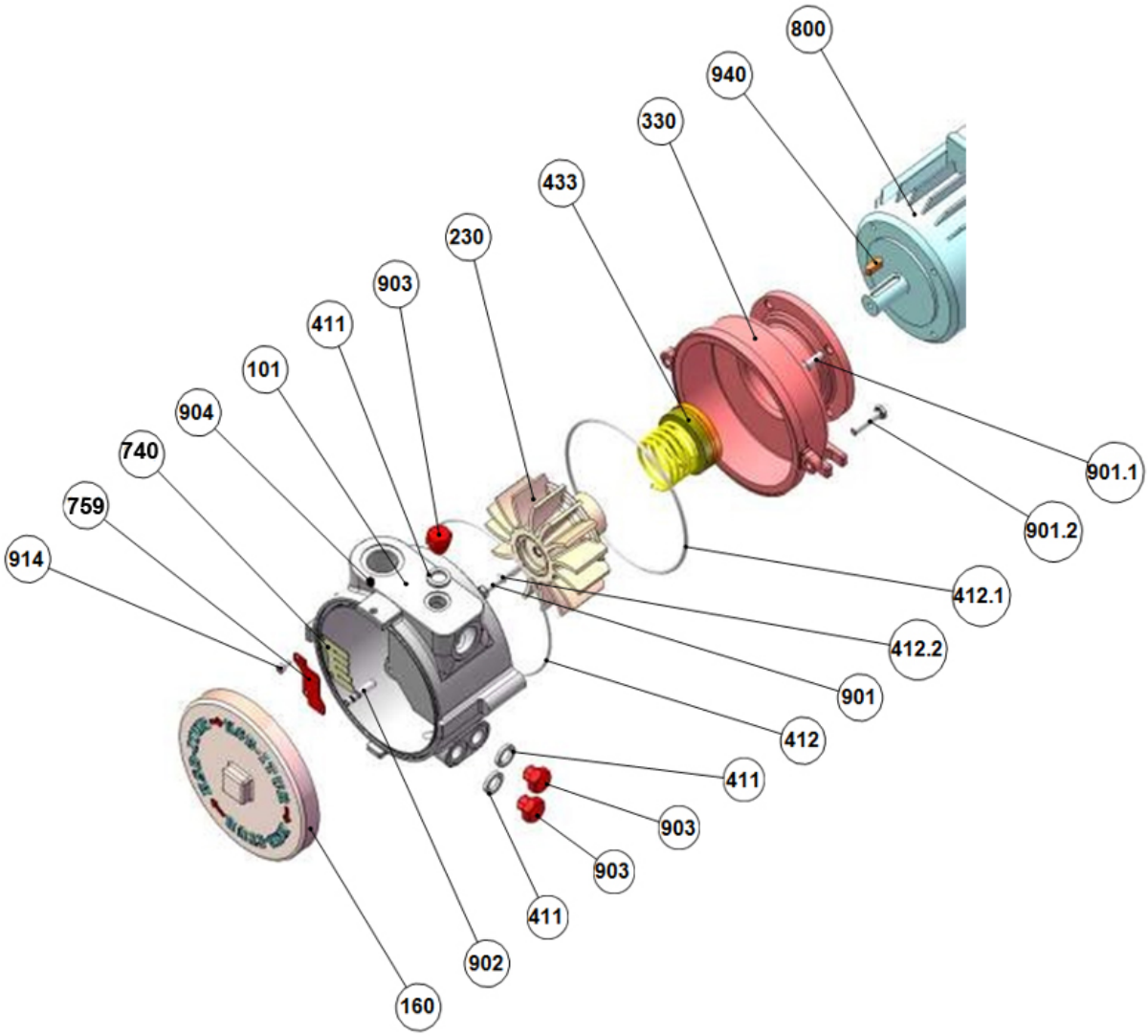

Fig. 16: Exploded view, auxiliary pump

List of components

Part No.	Description	Part No.	Description
101	Pump casing	759	Valve disc
160	Cover	800	Motor
230	Impeller	901.1/.2	Hexagon head bolt
330	Bearing bracket	902	Stud
411	Joint ring	903	Screw plug
412.1/.2	O-ring	904	Grub screw
433	Mechanical seal	914	Hexagon socket head cap screw
740	Valve	940	Key

09/12/2020

5211.5/03-EN

LENNTECH
WATER TREATMENT SOLUTIONS
info@lenntech.com Tel. +31-152-610-900
www.lenntech.com Fax. +31-152-616-289