Submersible Borehole Pump with
Integrated Pressure Switch

Ixo Pro

Type Series Booklet

Legal information/Copyright

Type Series Booklet Ixo Pro

All rights reserved. The contents provided herein must neither be distributed, copied, reproduced, edited or processed for any other purpose, nor otherwise transmitted, published or made available to a third party without the manufacturer's express written consent.

Subject to technical modification without prior notice.

© KSB SE & Co. KGaA, Frankenthal 2023-08-21

Contents

Building Services: Water Supply **4**
Submersible Borehole Pump with Integrated Pressure Switch 4
Ixo Pro 4
Main applications 4
Fluids handled 4
Operating data 4
Design details 4
Designation 5
Materials 5
Product benefits 5
Product information 5
Technical data 6
Characteristic curves 7
Dimensions 8
Installation information 9
Scope of supply 9
Accessories 9

Building Services: Water Supply

Submersible Borehole Pump with Integrated Pressure Switch

Ixo Pro

Main applications

- Rainwater harvesting
- Pressure boosting
- General irrigation systems
- Water extraction

Fluids handled

- Clean to turbid water not containing aggressive, abrasive or solid substances

Operating data

Table 1: Operating properties

Characteristic		Value
Flow rate	Q [m³/h]	≤ 3,9
	Q [l/min]	≤ 65
Head	H [m]	≤ 60
Fluid temperature	T [°C]	≥ +5
		≤ +40

Design details

Design

- Centrifugal pump
- Close-coupled design
- Multistage
- Integrated pressure switch
- For fully submerged operation
- Low-level inlet
- Suction strainer with a maximum mesh width of 2 mm
- Flow sensor
- Swing check valve

Drive

- Water-cooled single-phase AC motor
- 230 V, 50 Hz
- Thermal class F
- Enclosure IPX8
- Continuous duty
- Integrated capacitor
- Electronic dry running protection with 4 consecutive start-up attempts
- Thermal overload protection
- Power cable (H07RNF) incl. plug, length 15 m

Bearings

- Ball bearing
- Grease-packed bearings sealed for life

Shaft seal

- Double shaft seal with oil reservoir fitted in between

2150.5/05-EN

Designation

Example: Ixo Pro 4 Pack Plus

Table 2: Designation key

Code	Description	
Ixo Pro	Type series	
4	Number of stages	
Pack Plus	Version	
	Pack	With Kit-Press (pressure switch connection set)
	Pack Plus	With Kit-Press (pressure switch connection set) and pump foot

Materials

Table 3: Overview of available materials

Part No.	Description	Material
101	Pump shroud	Stainless steel AISI 304
108	Discharge casing	Stainless steel AISI 304
143	Suction strainer	Stainless steel AISI 304
171	Diffusers	Technopolymer (glass fibre reinforced polymer)
210	Pump shaft	Stainless steel AISI 304
230	Impellers	Stainless steel AISI 304
433	Mechanical seal	Aluminium graphite, ceramic graphite
811	Motor housing	Stainless steel AISI 304

Product benefits

- Easy and convenient installation with integrated pressure switch and completely wired cable, including plug
- Kit-Press (pressure switch connection set) extends the service life of the pump by preventing pressure surges in the discharge line and excessive starting/stopping.
- Corrosion-resistant with pump shroud and impellers made of stainless steel AISI 304
- High operating reliability with water-cooled motor with integrated thermal protection, electronic dry running protection and integrated swing check valve

Product information

Product information as per Regulation No. 1907/2006 (REACH)

For information as per European chemicals regulation (EC) No. 1907/2006 (REACH) see https://www.ksb.com/en-global/company/corporate-responsibility/reach.

2150.5/05-EN

Technical data

Ixo Pro

Table 4: Technical data (for Germany)

Size	Number of stages	Discharge-side connection	P_1	P_N	I_N 1~230 V, 50 Hz	Start-up pressure	Maximum working pressure	Capacitor	Power cable H07 RNF	Mat. No.	[kg]
			[kW]	[kW]	[A]	[bar]	[bar]	[µF]	[m]		
Ixo Pro Pack											
Ixo Pro 4 Pack	4	G 1	0,80	0,55	3,60	2	6	12	15	39300242	12,4
Ixo Pro 6 Pack	6	G 1	1,20	0,90	6,20	3	12	16	15	39300243	13,4

Table 5: Technical data (for all countries except Germany)

Size	Number of stages	Discharge-side connection	P_1	P_N	I_N 1~230 V, 50 Hz	Start-up pressure	Maximum working pressure	Capacitor	Power cable H07 RNF	Mat. No.	[kg]
			[kW]	[kW]	[A]	[bar]	[bar]	[µF]	[m]		
Ixo Pro											
Ixo Pro 4	4	G 1	0,80	0,55	3,60	2	6	12	15	39300168	11,5
Ixo Pro 6	6	G 1	1,20	0,90	6,20	3	12	16	15	39300169	12,5
Ixo Pro Pack											
Ixo Pro 4 Pack	4	G 1	0,80	0,55	3,60	2	6	12	15	39300242	12,4
Ixo Pro 6 Pack	6	G 1	1,20	0,90	6,20	3	12	16	15	39300243	13,4
Ixo Pro Pack Plus											
Ixo Pro 4 Pack Plus	4	G 1	0,80	0,55	3,60	2	6	12	15	39300244	14,6
Ixo Pro 6 Pack Plus	6	G 1	1,20	0,90	6,20	3	12	16	15	39300245	15,6

2150.5/05-EN

Characteristic curves

Ixo Pro 4, n = 2900 rpm

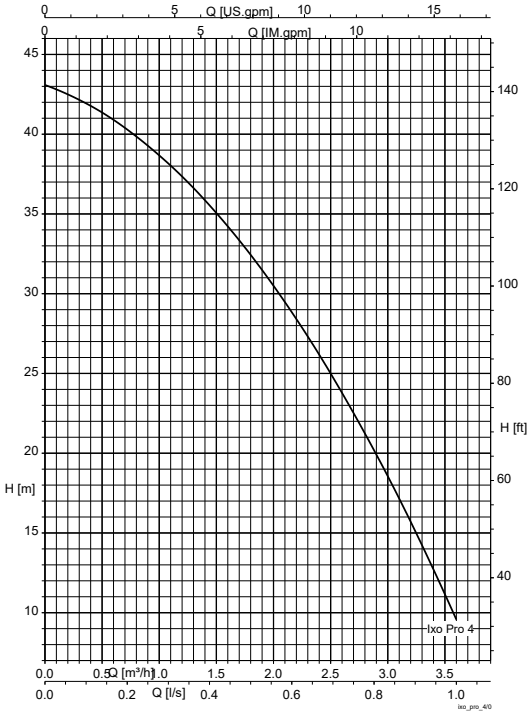

Ixo Pro 6, n = 2900 rpm

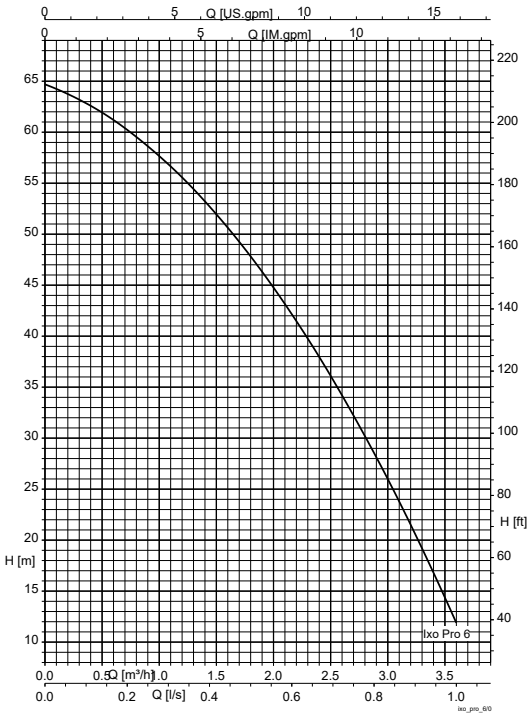

2150.5/05-EN

Dimensions

Ixo Pro

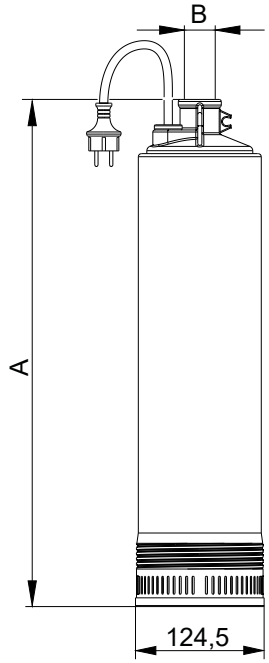

Fig. 1: Pump set dimensions

Table 6: Pump set dimensions

Size	Dimensions	Thread
	A	B
	[mm]	
4	502	G 1
6	569	G 1

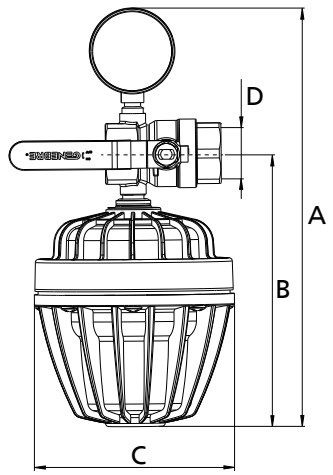

Fig. 2: Kit-Press (pressure switch connection set) dimensions

Table 7: Kit-Press (pressure switch connection set) dimensions

Dimensions			Thread
A	B	C	D
[mm]	[mm]	[mm]	
260	162	124	G 1

Installation information

Installing the pressure switch connection set in the discharge line above the water level is recommended. The pressure switch connection set prevents pressure surges and continual starting and stopping in the event of leakages.

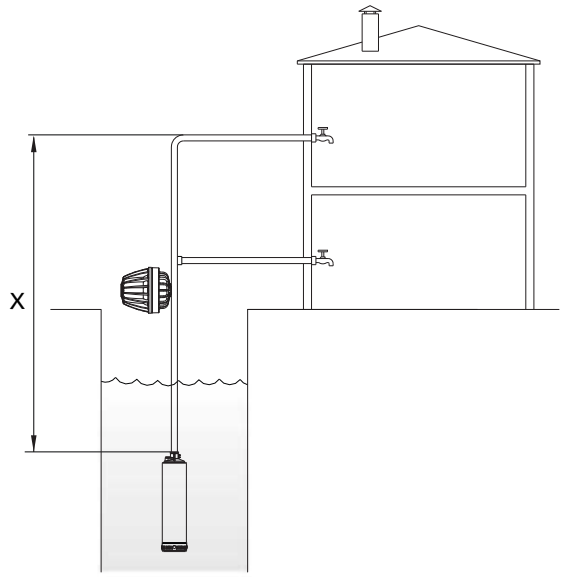

Fig. 3: Installation information

Table 8: Maximum installation height x

Size	x
	[m]
4	15
6	25

Scope of supply

The following items are included in the scope of supply:

- Multistage submersible borehole pump with integrated pressure switch
- Power cable (H07RNF) incl. plug, length 15 m

Ixo Pro Pack:

- Kit-Press (pressure switch connection set)

Ixo Pro Pack Plus:

- Kit-Press (pressure switch connection set)
- Pump foot

Accessories

Pump accessories

Table 9: Pump accessories

	Description	Connection	Ixo Pro	Ixo Pro Pack	Ixo Pro Pack Plus	Mat. No.	[kg]
	Kit-Press (pressure switch connection set) Comprising an expansion vessel and a shut-off valve with pressure gauge (installation in the discharge line above the water level)	G 1	✗	-[1]	-[1]	39300170	1,2
	Pump foot Option of floating-suction water intake	-	✗	-[1]	-[1]	39300171	2,2

[1] Included in the scope of supply

2023-08-21

2150.5/05-EN

LENNTECH
WATER TREATMENT SOLUTIONS
info@lenntech.com Tel. +31-152-610-900
www.lenntech.com Fax. +31-152-616-289