LENNTECH
WATER TREATMENT SOLUTIONS

KSB

Dry-installed Volute Casing Pump

# KWP

## Type Series Booklet

KSB

## Legal information/Copyright

Type Series Booklet KWP

All rights reserved. The contents provided herein must neither be distributed, copied, reproduced, edited or processed for any other purpose, nor otherwise transmitted, published or made available to a third party without the manufacturer's express written consent.

Subject to technical modification without prior notice.

© KSB SE & Co. KGaA, Frankenthal 2024-01-25

# Contents

**Centrifugal Pumps with Shaft Seal ... 4**
Dry-installed Volute Casing Pumps ... 4
KWP ... 4
Main applications ... 4
Fluids handled ... 4
Operating data ... 4
Design details ... 4
Designation ... 5
Materials ... 7
Coating and preservation ... 8
Product benefits ... 8
Product information ... 8
Product information as per Regulation No. 1907/2006 (REACH) ... 8
Certifications ... 8
Acceptance tests and warranty ... 8
Overview of product features / selection tables ... 9
Overview of product features ... 9
Impellers ... 11
Shaft seal ... 12
Discharge cover ... 13
Technical data ... 14
Hydraulic system ... 14
Bearing bracket ... 16
Selection charts ... 17
KWP K, n = 2900 rpm ... 17
KWP K, n = 1450 rpm ... 17
KWP K, n = 960 rpm ... 18
KWP K, n = 700 rpm ... 18
KWP K, n = 580 rpm ... 19
KWP K, n = 480 rpm ... 19
Dimensions and connections ... 20
Dimensions ... 20
Shaft end, pump feet, pump with bearing brackets P03ax to P06x ... 20
Shaft end, pump feet, pumps with bearing brackets P08sx to P12sx ... 22
Shaft end, pump feet, pumps with bearing brackets P16ax to P20sx ... 26
Connections ... 28
General arrangement drawings with list of components ... 32
Pump with bearing bracket P03ax to P06x ... 32
Pump with bearing bracket P08sx to P12sx ... 33
Pumps with bearing brackets P10ax to P12sx (sizes 500-400-0710, 500-400-0713) ... 34
Pumps with bearing bracket P12sx (sizes 500-500-0544, 600-660-0663, 600-600-0669) ... 35
Pump with bearing bracket P16ax V10 ... 36
Pumps with bearing bracket P16ax V10 (sizes 500-400-0710, 500-400-0713, 500-500-0633, 500-500-0637) ... 38
Pump with bearing bracket P20sx V10 ... 40
Pump with bearing bracket P20sx V11 ... 42
Shaft seals ... 43

# Centrifugal Pumps with Shaft Seal

## Dry-installed Volute Casing Pumps

# KWP

### Main applications

- Paper industry / pulp industry
- Sugar industry
- Food industry / beverage industry
- Fossil-fuelled power stations
- Chemical industry
- Petrochemical industry
- Flue gas desulphurisation
- Coal upgrading plants
- Industrial waste water treatment systems
- Seawater desalination/reverse osmosis

### Fluids handled

- Contaminated fluids
- Fluids containing solids
- Pre-treated waste water
- All types of slurries without stringy material
- Industrial and municipal waste water
- Pulps up to 5% bone dry with a maximum density of 2000 kg/m³, max. permissible viscosity 500 cSt

### Operating data

**Table 1:** Operating properties

| Characteristic | | Value |
|---|---|---|
| Flow rate | Q [m³/h] | ≤ 15000 [1] |
| Head | H [m] | ≤ 100 [1] |
| Operating temperature | T [°C] | ≥ -40 [1] |
| | | ≤ +140 [1] |
| Operating pressure | p [bar] | ≤ 10 [1] |

### Design details

### Design

- Volute casing with integrally cast pump feet
- Radially split volute casing
- Back pull-out design
- Single-stage
- Single-suction

### Installation types

- Horizontal installation

### Drive

- Electric motor connected to the pump via a coupling or belt drive

### Shaft seal

- Gland packing
- Single mechanical seal / double mechanical seal
- Shaft equipped with replaceable shaft protecting sleeve in the shaft seal area

### Impeller type

- Various application-oriented impeller types (⇨ Page 11)

### Bearings

- Oil-lubricated rolling element bearings
- Back pull-out design with axially adjustable pump rotor to adjust the clearance between impeller and wear plate

### Automation

Automation options:

- Hyatronic N
- PumpDrive
- PumpMeter

### Standard pressure class

- DN 40–DN 150: PN10/PN16
- DN 200–DN 900: PN10

2361.5/12-EN

[1] Higher values on request

## Connections

- DN 40 - DN 600: discharge flange with throughholes in accordance with EN 1092-2 as per pressure class
- From DN 600 for KWP KC: discharge flange with tapped throughholes in accordance with EN 1092
- DN 40 - DN 350: suction flange with tapped pocket holes in accordance with EN 1092-2 as per pressure class
- From DN 400 plus 350-350-500: suction flange with throughholes in accordance with EN 1092-2 as per pressure class

Flanges in accordance with ASME B 16.5:

- On request

## Designation

**Table 2:** Designation example

| Position | | | | | | | | | | | | | | | | | | | | | | | | | | | | | | | |
|---|---|---|---|---|---|---|---|---|---|---|---|---|---|---|---|---|---|---|---|---|---|---|---|---|---|---|---|---|---|---|---|
| 1 | 2 | 3 | 4 | 5 | 6 | 7 | 8 | 9 | 10 | 11 | 12 | 13 | 14 | 15 | 16 | 17 | 18 | 19 | 20 | 21 | 22 | 23 | 24 | 25 | 26 | 27 | 28 | 29 | 30 | 31 | 32 | 33 |
| K | W | P | F | 1 | 2 | 5 | - | 1 | 0 | 0 | - | 0 | 2 | 5 | 0 | | G | N | N | G | 1 | 0 | P | 4 | X | 3 | N | H | | 5 | 5 | 4 |
| See name plate and data sheet | | | | | | | | | | | | | | | | | | | | | | | See data sheet | | | | | | | | | |

**Table 3:** Designation key

| Position | Code | Description | |
|---|---|---|---|
| 1-3 | Pump type | | |
| | KWP | KWP | |
| 4 | Impeller | | |
| | F | Vortex impeller | |
| | K | Closed multi-channel impeller | |
| | O | Open multi-vane impeller | |
| 5-17 | Size, e.g. | | |
| | 125 | Nominal suction nozzle diameter [mm] | |
| | 100 | Nominal discharge nozzle diameter [mm] | |
| | 0250 | Nominal impeller diameter [mm] | |
| 18 | Pump casing material | | |
| | D | Noridur | 1.4593 |
| | G | Grey cast iron | GJL-250 |
| | H | Norihard NH 15 3 | - |
| | K | Nodular cast iron/CeramikPolySiC | GJS-400-18-LT/CPS |
| | O | Noriclor | 1.4573 |
| 19 | Impeller material | | |
| | D | Noridur | 1.4593 |
| | H | Norihard NH 15 3 | - |
| | K | CeramikPolySiC | - |
| | M | Noricrom | 1.4475 |
| | N | ERN | - |
| | U | Noridur DAS | 1.4593 |
| | O | Noriclor | 1.4573 |
| 20 | Wear plate/wear ring material | | |
| | D | Noridur | 1.4593 |
| | H | Norihard NH 15 3 | - |
| | K[2)] | CeramikPolySiC | - |
| | M | Noricrom | 1.4475 |
| | N | ERN | - |
| | U | Noridur DAS | 1.4593 |
| | O | Noriclor | 1.4573 |
| 21 | Discharge cover material | | |
| | D | Noridur | 1.4593 |
| | G | Grey cast iron | GJL-250 |
| | H | Norihard NH 15 3 | - |
| | K | CeramikPolySiC | - |
| | M | Noricrom | 1.4475 |
| | O | Noriclor | 1.4573 |
| 22-23 | Design version | | |

2 K refers to a suction cover in GJS-400-18-LT/CeramikPolySiC for pumps without a separate wear plate.

| Position | Code | Description |
|---|---|---|
| 22-23 | 10 | 10 |
| | 11 | 11 |
| 24-25 | Shaft seal operating mode | |
| | A | Single mechanical seal in A-type cover |
| | CA | Single cartridge seal |
| | CBA | Double cartridge seal, with barrier fluid |
| | DR | Double mechanical seal in cylindrical cover, with barrier fluid |
| | P3 | Gland packing (arrangement I = 2/1/2) for barrier fluid |
| | P6 | Gland packing (arrangement II = 1/1/3) for barrier fluid |
| | P4 | Gland packing (arrangement IIa = -/1/3) for flushing liquid |
| | TA | Double mechanical seal in A-type cover, unpressurised |
| | TS | Double mechanical seal in A-type cover, with barrier fluid |
| 26 | Design | |
| | -[3] | Standard |
| | X | Non-standard (BT3D, BT3) |
| 27-29 | Installation type | |
| | 0 | Pump only (Fig. 0) |
| | 3N | Pump, motor, baseplate, non-spacer-type coupling (Fig. 3E) |
| | 3NH | Pump, motor, baseplate, spacer-type coupling (Fig. 3E) |
| | BH | Close-coupled, horizontal |
| | BV | Close-coupled, vertical |
| 30-32 | Motor rating $P_N$ [kW] | |
| | 055 | 55 |
| | 132 | 132 |
| 33 | Number of motor poles | |

3 Blank

2361.5/12-EN

## Materials

**Table 4:** Materials depending on material variant

| Part no. | Description | Material variant (Pump casing + impeller + wear plate + discharge cover) | | | | | | | | | | |
|---|---|---|---|---|---|---|---|---|---|---|---|---|
| | | DDDD | DKKM | DMKM | DUUD | GDNG | GHHH | GNNG | HHHH | KKKK | KUKK | OOOO[4] |
| | | Materials | | | | | | | | | | |
| 101 | Pump casing | Noridur 1.4593 | Noridur 1.4593 [5] | Noridur 1.4593 [5] | Noridur 1.4593 [5] | Grey cast iron GJL–250 | Grey cast iron GJL–250 | Grey cast iron GJL–250 | Norihard NH 15 3 [5] | Nodular cast iron GJS-400-18-LT Ceramik PolySiC [5] | Nodular cast iron GJS-400-18-LT Ceramik PolySiC [5] | Noriclor 1.4573 |
| 135.01 | Wear plate, suction side | Noridur 1.4593 | Ceramik PolySiC | Ceramik PolySiC | Noridur DAS 1.4593 | ERN | Norihard NH 15 3 | ERN | Norihard NH 15 3 | Ceramik PolySiC | Ceramik PolySiC | Noriclor 1.4573 |
| 162 | Suction cover | Noridur 1.4593 | Noridur 1.4593 | Noridur 1.4593 | Noridur 1.4593 | Grey cast iron GJL–250 | Grey cast iron GJL–250 | Grey cast iron GJL–250 | Norihard NH 15 3 | Nodular cast iron GJS-400-18-LT Ceramik PolySiC | Nodular cast iron GJS-400-18-LT Ceramik PolySiC | Noriclor 1.4573 |
| 163 | Discharge cover | Noridur 1.4593 | Noricrom 1.4475 | Noricrom 1.4475 | Noridur 1.4593 | Grey cast iron GJL–250 | Norihard NH 15 3 | Grey cast iron GJL–250 | Norihard NH 15 3 | Ceramik PolySiC | Ceramik PolySiC | Noriclor 1.4573 |
| 210 | Shaft | C45+N | C45+N | C45+N | C45+N | C45+N | C45+N | C45+N | C45+N | C45+N | C45+N | C45+N |
| 230 | Impeller | Noridur 1.4593 | Ceramik PolySiC | Noricrom 1.4475 | Noridur DAS 1.4593 | Noridur 1.4593 | Norihard NH 15 3 | ERN | Norihard NH 15 3 | Ceramik PolySiC | Noridur DAS 1.4593 | Noriclor 1.4573 |
| 330 | Bearing bracket | Grey cast iron GJL–250 | Grey cast iron GJL–250 | Grey cast iron GJL–250 | Grey cast iron GJL–250 | Grey cast iron GJL–250 | Grey cast iron GJL–250 | Grey cast iron GJL–250 | Grey cast iron GJL–250 | Grey cast iron GJL–250 | Grey cast iron GJL–250 | Grey cast iron GJL–250 |
| 344 | Bearing bracket lantern | Grey cast iron GJL–250 | Grey cast iron GJL–250 | Grey cast iron GJL–250 | Grey cast iron GJL–250 | Grey cast iron GJL–250 | Grey cast iron GJL–250 | Grey cast iron GJL–250 | Grey cast iron GJL–250 | Grey cast iron GJL–250 | Grey cast iron GJL–250 | Grey cast iron GJL–250 |
| 451.01 | Stuffing box housing | Noridur 1.4593 | Noridur 1.4593 | Noridur 1.4593 | Noridur 1.4593 | Grey cast iron GJL–250 | Grey cast iron GJL–250 | Grey cast iron GJL–250 | Grey cast iron GJL–250 | Noridur 1.4593 | Noridur 1.4593 | Hastelloy |
| 524.01 | Shaft protecting sleeve (gland packing) | 1.4539 | 1.4539 | 1.4539 | 1.4539 | 1.4122 HV500+80 | 1.4122 HV500+80 | 1.4122 HV500+80 | 1.4122 HV500+80 | 1.4539 | 1.4539 | 2.4610 |
| 524.01 | Shaft protecting sleeve (mechanical seal) | 1.4539 | 1.4539 | 1.4539 | 1.4539 | 1.4539 | 1.4539 | 1.4539 | 1.4539 | 1.4539 | 1.4539 | 2.4610 |
| 906 | Impeller screw[6] | Noridur 1.4593 | Noridur 1.4593 | Noridur 1.4593 | Noridur 1.4593 | C35E+N | C35E+N | C35E+N | C35E+N | Noridur 1.4593 | Noridur 1.4593 | 2.4610 |

4 On request
5 Without auxiliary connection holes (drain hole and pressure gauge connection)
6 Bearing bracket P08sx and above: impeller hub cap 260

## Coating and preservation

- Coating and preservation to KSB standard

## Product benefits

- Easy maintenance due to back pull-out design
- Safe design: all pressure-retaining components cast with extra corrosion/wear allowance
- Wear-resistant standard pump in diagonal gap design with suction-side wear plate
- High levels of efficiency with channel-type impeller, impeller with front vanes and diagonal gap, back vanes reduce axial thrust
- Dry shaft: no special materials required
- Reinforced, adjustable bearing assembly design
- Optimum circulation around the mechanical seal, venting and drainage of the shaft seal chamber due to the mechanical seal fitted in a conical shaft seal chamber

## Product information

## Product information as per Regulation No. 1907/2006 (REACH)

For information as per European chemicals regulation (EC) No. 1907/2006 (REACH) see https://www.ksb.com/en-global/company/corporate-responsibility/reach.

## Certifications

**Table 5:** Overview

| Label | Effective in: | Comment |
|---|---|---|
| | All countries | Certified quality management to ISO 9001 |

## Acceptance tests and warranty

- Materials testing
  - Test report 2.2 on request
- Final inspection
  - Inspection certificate 3.1 to EN 10204 on request
- Hydraulic test

  The operating point of each pump is guaranteed to ISO 9906/3B.

  The following acceptance tests can be performed and certified at extra charge:
  - Performance test to ISO 9906
  - NPSH test
- Other inspections/tests on request
- Warranty

  Warranties are given within the scope of the valid terms and conditions of sale and delivery.

## Overview of product features / selection tables

### Overview of product features

**Table 6:** Impeller types and material variants per pump size

| Size | Impeller type (⇨ Page 11) | | | | | | | | | | | | | | | | |
|---|---|---|---|---|---|---|---|---|---|---|---|---|---|---|---|---|---|
| | F | | | | | K | | | | | | | | | | O | |
| | | | | | | Nodular cast iron | | | | | | | | C[7] | | | |
| | Material variant (⇨ Page 7) | | | | | | | | | | | | | | | | |
| | DDDD | GDNG | GHHH | GNNG | HHHH | DDDD | DKKM | DMKM | DUUD | GDNG | GHHH | GNNG | HHHH | KKKK | KUKK | DDDD | GDNG |
| 065-040-0250 | - | - | - | - | - | ✗ | - | ✗ | ✗ | ✗ | ✗ | ✗ | ✗ | - | - | - | - |
| 065-050-0200 | - | - | - | - | - | ✗ | - | - | ✗ | ✗ | ✗ | ✗ | ✗ | - | - | ✗ | ✗ |
| 065-050-0201 | ✗ | ✗ | ✗ | ✗ | ✗ | - | - | - | - | - | - | - | - | - | - | - | - |
| 080-040-0315 | - | - | - | - | - | ✗ | - | ✗ | ✗ | ✗ | ✗ | ✗ | ✗ | - | - | - | - |
| 080-050-0400 | - | - | - | - | - | ✗ | ✗ | - | ✗ | ✗ | ✗ | ✗ | ✗ | - | - | - | - |
| 080-065-0200 | - | - | - | - | - | ✗ | - | - | ✗ | ✗ | ✗ | ✗ | ✗ | - | - | ✗ | ✗ |
| 080-065-0201 | ✗ | ✗ | ✗ | ✗ | ✗ | - | - | - | - | - | - | - | - | - | - | - | - |
| 080-065-0313 | - | - | - | - | - | ✗ | - | - | ✗ | ✗ | ✗ | ✗ | ✗ | - | - | - | - |
| 080-065-0315 | - | - | - | - | - | ✗ | - | - | ✗ | ✗ | ✗ | ✗ | ✗ | - | - | ✗ | ✗ |
| 080-065-0400 | - | - | - | - | - | ✗ | - | ✗ | ✗ | ✗ | ✗ | ✗ | ✗ | - | - | - | - |
| 100-080-0250 | - | - | - | - | - | ✗ | - | - | ✗ | ✗ | ✗ | ✗ | ✗ | - | - | ✗ | ✗ |
| 100-080-0251 | ✗ | ✗ | ✗ | ✗ | ✗ | - | - | - | - | - | - | - | - | - | - | - | - |
| 100-080-0311 | ✗ | ✗ | ✗ | ✗ | ✗ | - | - | - | - | - | - | - | - | - | - | - | - |
| 100-080-0315 | - | - | - | - | - | ✗ | ✗ | - | ✗ | ✗ | ✗ | ✗ | ✗ | - | - | - | - |
| 100-080-0400 | - | - | - | - | - | ✗ | - | ✗ | ✗ | ✗ | ✗ | ✗ | ✗ | - | - | ✗ | ✗ |
| 100-080-0403 | - | - | - | - | - | ✗ | - | - | ✗ | ✗ | ✗ | ✗ | ✗ | - | - | - | - |
| 125-080-0500 | - | - | - | - | - | ✗ | ✗ | - | ✗ | ✗ | ✗ | ✗ | ✗ | - | - | - | - |
| 125-100-0250 | - | - | - | - | - | ✗ | - | - | ✗ | ✗ | ✗ | ✗ | ✗ | - | - | ✗ | ✗ |
| 125-100-0251 | ✗ | ✗ | ✗ | ✗ | ✗ | - | - | - | - | - | - | - | - | - | - | - | - |
| 125-100-0253 | - | - | - | - | - | ✗ | - | - | ✗ | ✗ | ✗ | ✗ | ✗ | - | - | - | - |
| 125-100-0315 | - | - | - | - | - | ✗ | ✗ | - | ✗ | ✗ | ✗ | ✗ | ✗ | - | - | - | - |
| 125-100-0400 | - | - | - | - | - | ✗ | ✗ | ✗ | ✗ | ✗ | ✗ | ✗ | ✗ | - | - | ✗ | ✗ |
| 125-100-0403 | - | - | - | - | - | ✗ | - | - | ✗ | ✗ | ✗ | ✗ | ✗ | - | - | - | - |
| 150-125-0500 | - | - | - | - | - | ✗ | ✗ | - | ✗ | ✗ | ✗ | ✗ | ✗ | - | - | - | - |
| 150-125-0503 | - | - | - | - | - | ✗ | - | - | ✗ | ✗ | ✗ | ✗ | ✗ | - | - | - | - |
| 150-150-0311 | ✗ | ✗ | ✗ | ✗ | ✗ | - | - | - | - | - | - | - | - | - | - | - | - |
| 150-150-0315 | - | - | - | - | - | ✗ | - | - | ✗ | ✗ | ✗ | ✗ | ✗ | - | - | ✗ | ✗ |
| 150-150-0400 | - | - | - | - | - | ✗ | ✗ | - | ✗ | ✗ | ✗ | ✗ | ✗ | - | - | - | - |
| 150-150-0403 | - | - | - | - | - | ✗ | - | - | ✗ | ✗ | ✗ | ✗ | ✗ | - | - | - | - |
| 200-200-0320 | - | - | - | - | - | ✗ | - | - | ✗ | ✗ | ✗ | ✗ | ✗ | - | - | - | - |
| 200-200-0400 | - | - | - | - | - | ✗ | - | - | ✗ | ✗ | ✗ | ✗ | ✗ | - | - | ✗ | ✗ |
| 200-200-0403 | - | - | - | - | - | ✗ | - | - | ✗ | ✗ | ✗ | ✗ | ✗ | - | - | - | - |
| 200-200-0500 | - | - | - | - | - | ✗ | - | - | ✗ | ✗ | ✗ | ✗ | ✗ | - | - | - | - |
| 200-200-0501 | - | - | - | - | - | ✗ | - | - | ✗ | ✗ | ✗ | ✗ | ✗ | - | - | - | - |
| 200-200-0503 | - | - | - | - | - | ✗ | - | - | ✗ | ✗ | ✗ | ✗ | ✗ | - | - | - | - |
| 250-250-0315 | - | - | - | - | - | ✗ | - | - | ✗ | ✗ | ✗ | ✗ | ✗ | - | - | - | - |
| 250-250-0400 | - | - | - | - | - | ✗ | - | - | ✗ | ✗ | ✗ | ✗ | ✗ | - | - | - | - |
| 250-250-0403 | - | - | - | - | - | ✗ | - | ✗ | ✗ | ✗ | ✗ | ✗ | ✗ | - | - | - | - |
| 250-250-0500 | - | - | - | - | - | ✗ | - | - | ✗ | ✗ | ✗ | ✗ | ✗ | - | - | ✗ | ✗ |
| 250-250-0503 | - | - | - | - | - | ✗ | - | - | ✗ | ✗ | ✗ | ✗ | ✗ | - | - | - | - |
| 250-250-0505 | - | - | - | - | - | ✗ | - | - | ✗ | ✗ | ✗ | ✗ | ✗ | - | - | - | - |
| 250-250-0630 | - | - | - | - | - | ✗ | - | - | ✗ | ✗ | ✗ | ✗ | ✗ | - | - | - | - |
| 250-250-0634 | - | - | - | - | - | ✗ | - | - | ✗ | ✗ | ✗ | ✗ | ✗ | - | - | - | - |
| 300-300-0400 | - | - | - | - | - | ✗ | - | - | ✗ | ✗ | ✗ | ✗ | ✗ | - | - | - | - |
| 300-300-0500 | - | - | - | - | - | ✗ | - | - | ✗ | ✗ | ✗ | ✗ | ✗ | - | - | - | - |

7 C/CPS (CeramikPolySiC— lined pressure boundary, casing + suction cover+ discharge cover)

| Size | Impeller type (⇨ Page 11) | | | | | | | | | | | | | | | | |
|---|---|---|---|---|---|---|---|---|---|---|---|---|---|---|---|---|---|
| | F | | | | | K | | | | | | | | | | O | |
| | | | | | | Nodular cast iron | | | | | | | | C[7] | | | |
| | Material variant (⇨ Page 7) | | | | | | | | | | | | | | | | |
| | DDDD | GDNG | GHHH | GNNG | HHHH | DDDD | DKKM | DMKM | DUUD | GDNG | GHHH | GNNG | HHHH | KKKK | KUKK | DDDD | GDNG |
| 300-300-0503 | - | - | - | - | - | ✗ | - | - | ✗ | ✗ | ✗ | ✗ | ✗ | - | - | - | - |
| 350-350-0400 | - | - | - | - | - | ✗ | - | - | ✗ | ✗ | ✗ | ✗ | ✗ | - | - | - | - |
| 350-350-0500 | - | - | - | - | - | ✗ | - | - | ✗ | ✗ | ✗ | ✗ | ✗ | - | - | - | - |
| 350-350-0503 | - | - | - | - | - | ✗ | - | - | ✗ | ✗ | ✗ | ✗ | ✗ | - | - | - | - |
| 350-350-0504 | - | - | - | - | - | ✗ | - | - | ✗ | ✗ | ✗ | ✗ | ✗ | - | - | - | - |
| 350-350-0630 | - | - | - | - | - | ✗ | - | - | ✗ | ✗ | ✗ | ✗ | ✗ | - | - | - | - |
| 350-350-0633 | - | - | - | - | - | ✗ | - | - | ✗ | ✗ | ✗ | ✗ | ✗ | - | - | - | - |
| 400-400-0500 | - | - | - | - | - | ✗ | - | - | ✗ | ✗ | ✗ | ✗ | ✗ | - | - | - | - |
| 400-400-0503 | - | - | - | - | - | ✗ | - | - | DUKD | ✗ | [8] | ✗ | [8] | - | - | - | - |
| 400-400-0533 | - | - | - | - | - | ✗ | - | - | ✗ | ✗ | [8] | [8] | [8] | - | - | - | - |
| 400-400-0583 | - | - | - | - | - | ✗ | - | - | ✗ | ✗ | [8] | ✗ | [8] | - | - | - | - |
| 500-400-0710 | - | - | - | - | - | ✗ | - | - | ✗ | ✗ | [8] | ✗ | [8] | - | - | - | - |
| 500-400-0713 | - | - | - | - | - | ✗ | - | - | ✗ | ✗ | ✗ | ✗ | ✗ | - | - | - | - |
| 500-500-0544 | - | - | - | - | - | ✗ | - | - | ✗ | ✗ | [8] | ✗ | [8] | - | - | - | - |
| 500-500-0630 | - | - | - | - | - | ✗ | - | - | - | ✗ | [8] | ✗ | [8] | - | - | - | - |
| 500-500-0633 | - | - | - | - | - | ✗ | - | - | ✗ | ✗ | [8] | ✗ | [8] | - | - | - | - |
| 500-500-0634 | - | - | - | - | - | ✗ | - | - | [8] | ✗ | [8] | [8] | [8] | - | - | - | - |
| 500-500-0635 | - | - | - | - | - | ✗ | - | - | [8] | ✗ | [8] | [8] | [8] | - | - | - | - |
| 500-500-0637 | - | - | - | - | - | ✗ | - | - | ✗ | ✗ | [8] | [8] | [8] | - | - | - | - |
| 600-600-0663 | - | - | - | - | - | - | - | DDKD + DUKD + GNKG + GGKG | | | | | | - | - | - | - |
| 600-600-0669 | - | - | - | - | - | - | - | - | DKKD | | | - | - | - | - | - | - |
| 600-600-0710 | - | - | - | - | - | [8] | - | - | [8] | [8] | [8] | [8] | [8] | - | - | - | - |
| 600-600-0753 | - | - | - | - | - | - | - | - | DUKD | | | - | - | - | - | - | - |
| 600-600-0803 | - | - | - | - | - | - | - | - | DUKD | | | - | - | - | - | - | - |
| 600-600-0813 | - | - | - | - | - | - | - | - | DUKD | | | - | - | - | - | - | - |
| 600-600-0824 | - | - | - | - | - | - | - | - | DUKD | | | - | - | - | ✗ | - | - |
| 600-600-0825 | - | - | - | - | - | - | - | - | DUKD | | | - | - | - | ✗ | - | - |
| 600-600-0829 | - | - | - | - | - | - | - | - | - | - | - | - | - | ✗ | - | - | - |
| 600-600-0873 | - | - | - | - | - | - | - | - | ✗ | - | - | - | - | - | - | - | - |
| 600-600-0923 | - | - | - | - | - | - | - | - | DUKD | | | - | - | - | - | - | - |
| 700-700-0923 | - | - | - | - | - | - | - | - | - | - | - | - | - | - | ✗ | - | - |
| 700-700-0929 | - | - | - | - | - | - | - | - | - | - | - | - | - | ✗ | - | - | - |
| 800-700-0953 | - | - | - | - | - | - | - | - | - | - | - | - | - | - | ✗ | - | - |
| 800-700-0959 | - | - | - | - | - | - | - | - | - | - | - | - | - | ✗ | - | - | - |
| 800-800-0934 | - | - | - | - | - | - | - | - | - | - | - | - | - | - | ✗ | - | - |
| 800-800-0935 | - | - | - | - | - | - | - | - | - | - | - | - | - | - | ✗ | - | - |
| 800-800-0939 | - | - | - | - | - | - | - | - | - | - | - | - | - | ✗ | - | - | - |
| 800-900-0883 | - | - | - | - | - | - | - | - | - | - | - | - | - | - | ✗ | - | - |
| 900-900-1133 | - | - | - | - | - | - | - | - | - | - | - | - | - | - | ✗ | - | - |
| 900-900-1134 | - | - | - | - | - | - | - | - | - | - | - | - | - | - | ✗ | - | - |
| 900-900-1137 | - | - | - | - | - | - | - | - | - | - | - | - | - | ✗ | - | - | - |
| 900-900-1138 | - | - | - | - | - | - | - | - | - | - | - | - | - | ✗ | - | - | - |
| 900-900-1139 | - | - | - | - | - | - | - | - | - | - | - | - | - | ✗ | - | - | - |

2361.5/12-EN

8 On request

## Impellers

- Various application-oriented impeller types
- Back vanes reduce axial thrust.

| | | |
|---|---|---|
| | Closed multi-channel impeller<br>(impeller type K) | **Suitable for the following fluids:**<br>Contaminated, solids-laden fluids not containing stringy material and containing no or very little entrapped gas |
| | Open multi-vane impeller<br>(impeller type O) | **Suitable for the following fluids:**<br>Uncontaminated or slightly contaminated fluids containing very little entrapped gas as well as fluids liable to form deposits and bunch |
| | Free-flow impeller<br>(impeller type F) | **Suitable for the following fluids:**<br>Fluids containing coarse solids and stringy material as well as fluids with entrapped gas and entrapped air |

## Shaft seal

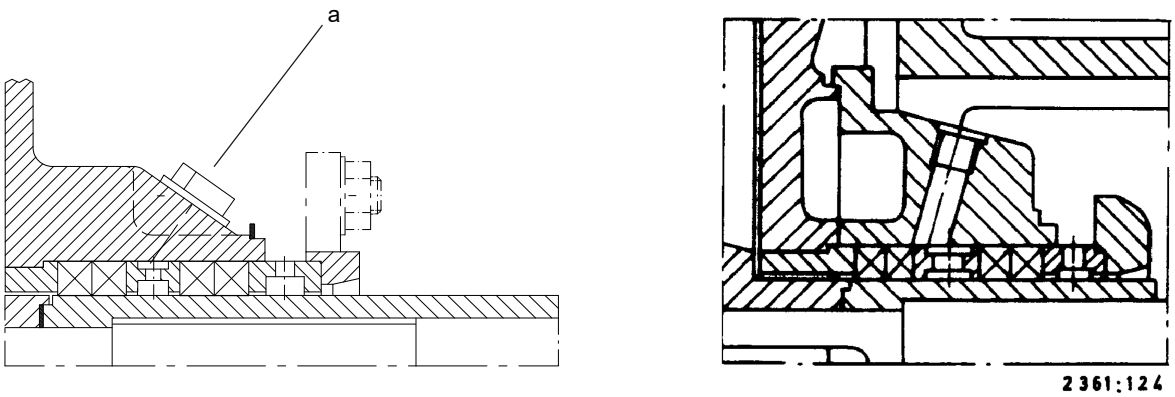


1 2

**Fig. 1:** Gland packing

| | | | |
|---|---|---|---|
| 1 | Uncooled gland packing | 2 | Cooled gland packing |
| a | Connection for barrier fluid or flushing liquid (connections 10 A.1 and 10 E.1) | | |

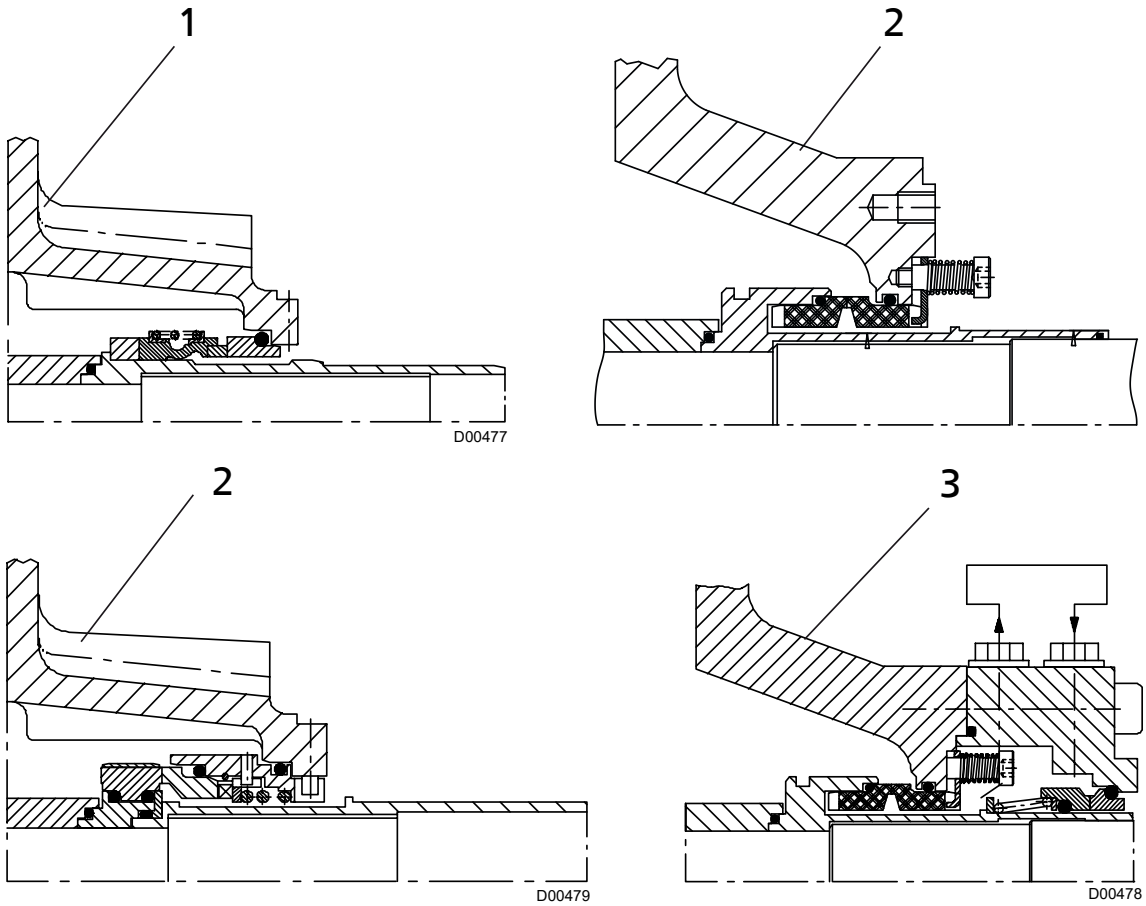


**Fig. 2:** Mechanical seals in conical shaft seal chamber (A-type)

| | | | |
|---|---|---|---|
| 1 | Single mechanical seal, unbalanced | 3 | Mechanical seal in tandem arrangement, with quench |
| 2 | Single mechanical seal with spring-loaded stationary assembly | | |

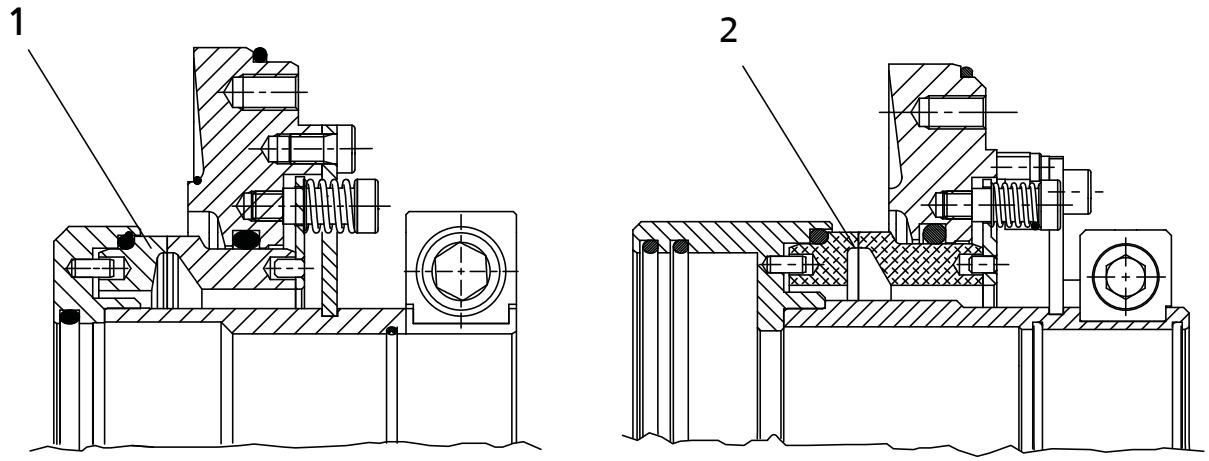


**Fig. 3:** Mechanical seals in conical shaft seal chamber (A-type)

| | | | |
|---|---|---|---|
| 1 | Single mechanical seal, balanced, with spring-loaded stationary assembly, bi-directional, for P16ax/P20sx V10 | 2 | Single mechanical seal, balanced, with spring-loaded stationary assembly, bi-directional, for P20sx V11 |

## Discharge cover

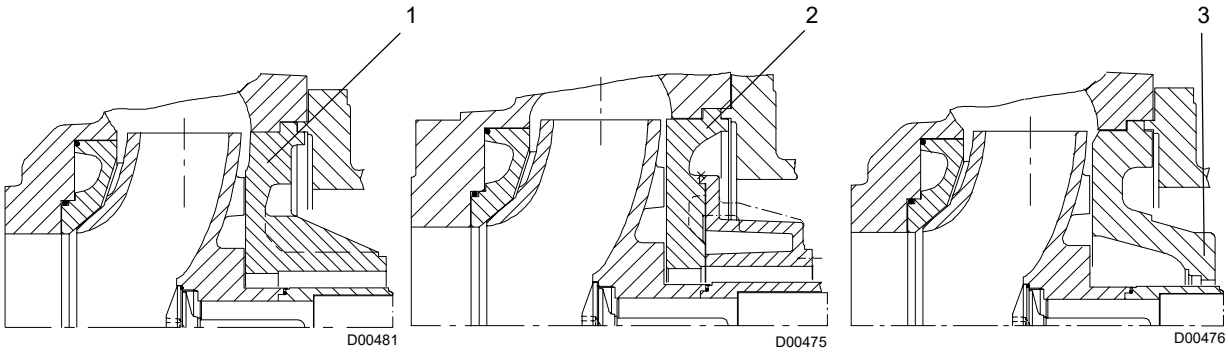


**Fig. 4:** Discharge cover versions

| | | | |
|---|---|---|---|
| 1 | Discharge cover with integrally cast stuffing box housing (cylindrical cover)<br>Material variants: GNNG, GDNG, DDDD | 3 | For pump sets with mechanical seal: discharge cover with conical seal chamber (A-type cover)<br>Material variants: GNNG, GDNG, DDDD, DKKM, GHHH, HHHH |
| 2 | Discharge cover with bolted stuffing box housing (cylindrical cover, split)<br>Material variants: GHHH, HHHH and all sizes on bearing brackets P08sx, P10ax, P12sx for all available materials. | | |

## Suction side versions

- Wear plate
  - 065-040-0250 to 600-600-0669
- Casing wear ring
  - 250-250-0315
  - 300-300-0400
  - 350-350-0400
  - 400-400-0500
- Suction cover from 400-400-0533

## Technical data

### Hydraulic system

**Table 7:** Technical data of hydraulic system

| Sizes | Bearing bracket | Impeller type K | | | | Impeller type O | | | | Impeller type F | | | |
|---|---|---|---|---|---|---|---|---|---|---|---|---|---|
| | | Free passage [mm] | Number of vanes | Impeller diameter max. [mm] | Impeller diameter min. [mm] | Free passage [mm] | Number of vanes | Impeller diameter max. [mm] | Impeller diameter min. [mm] | Free passage [mm] | Number of vanes | Impeller diameter max. [mm] | Impeller diameter min. [mm] |
| 065-040-0250 | P03ax | 15 | 3 | 260 | 170 | - | - | - | - | - | - | - | - |
| 065-050-0200 | P03ax | 34 | 2 | 209 | 120 | 30 | 3 | 209 | 160 | - | - | - | - |
| 065-050-0201 | P03ax | - | - | - | - | - | - | - | - | 45 | 6 | 209 | 130 |
| 080-040-0315 | P04ax | 15 | 2 | 320 | 230 | - | - | - | - | - | - | - | - |
| 080-050-0400 | P04ax | 15 | 2 | 408 | 330 | - | - | - | - | - | - | - | - |
| 080-065-0200 | P03ax | 46 | 2 | 209 | 145 | 30 | 3 | 209 | 160 | - | - | - | - |
| 080-065-0201 | P03ax | - | - | - | - | - | - | - | - | 55 | 6 | 209 | 145 |
| 080-065-0313 | P04ax | 15 | 5 | 320 | 230 | - | - | - | - | - | - | - | - |
| 080-065-0315 | P04ax | 42 | 2 | 320 | 230 | 25 | 3 | 320 | 230 | - | - | - | - |
| 080-065-0400 | P04ax | 34 | 2 | 408 | 330 | - | - | - | - | - | - | - | - |
| 100-080-0250 | P03ax | 50 | 2 | 260 | 170 | 36 | 3 | 260 | 170 | - | - | - | - |
| 100-080-0251 | P03ax | - | - | - | - | - | - | - | - | 60 | 7 | 260 | 170 |
| 100-080-0311 | P04ax | - | - | - | - | - | - | - | - | 50 | 7 | 320 | 260 |
| 100-080-0315 | P04ax | 44 | 2 | 320 | 260 | - | - | - | - | - | - | - | - |
| 100-080-0400 | P05ax | 46 | 2 | 404 | 280 | 28 | 3 | 404 | 280 | - | - | - | - |
| 100-080-0403 | P05ax | 16 | 5 | 404 | 280 | - | - | - | - | - | - | - | - |
| 125-080-0500 | P06x | 20 | 3 | 504 | 380 | - | - | - | - | - | - | - | - |
| 125-100-0250 | P04ax | 60 | 2 | 260 | 180 | 50 | 3 | 260 | 180 | - | - | - | - |
| 125-100-0251 | P04ax | - | - | - | - | - | - | - | - | 70 | 7 | 260 | 180 |
| 125-100-0253 | P04ax | 28 | 6 | 260 | 180 | - | - | - | - | - | - | - | - |
| 125-100-0315 | P04ax | 54 | 2 | 320 | 230 | - | - | - | - | - | - | - | - |
| 125-100-0400 | P05ax | 50 | 2 | 404 | 280 | 35 | 4 | 404 | 280 | - | - | - | - |
| 125-100-0403 | P05ax | 20 | 6 | 404 | 280 | - | - | - | - | - | - | - | - |
| 150-125-0500 | P06x | 50 | 3 | 504 | 350 | - | - | - | - | - | - | - | - |
| 150-125-0503 | P06x | 21 | 6 | 509 | 350 | - | - | - | - | - | - | - | - |
| 150-150-0311 | P05ax | - | - | - | - | - | - | - | - | 90 | 7 | 320 | 260 |
| 150-150-0315 | P05ax | 88 | 2 | 320 | 260 | 65 | 5 | 320 | 260 | - | - | - | - |
| 150-150-0400 | P05ax | 64 | 3 | 404 | 320 | - | - | - | - | - | - | - | - |
| 150-150-0403 | P05ax | 41 | 5 | 404 | 320 | - | - | - | - | - | - | - | - |
| 200-200-0320 | P05ax | 75 | 3 | 320 | 257 | - | - | - | - | - | - | - | - |
| 200-200-0400 | P06x | 80 | 3 | 403 | 320 | 78 | 5 | 404 | 320 | - | - | - | - |
| 200-200-0403 | P06x | 40 | 6 | 404 | 320 | - | - | - | - | - | - | - | - |
| 200-200-0500 | P08sx, P10ax, P12sx | 75 | 3 | 504 | 400 | 70 | 5 | 504 | 400 | - | - | - | - |
| 200-200-0501 | P08sx, P10ax, P12sx | 75 | 3 | 504 | 400 | - | - | - | - | - | - | - | - |
| 200-200-0503 | P08sx, P10ax, P12sx | 40 | 5 | 504 | 400 | - | - | - | - | - | - | - | - |
| 250-250-0315 | P06x | 70 | 3 | 324 | 285 | - | - | - | - | - | - | - | - |
| 250-250-0400 | P08sx, P10ax | 80 | 3 | 409 | 338 | - | - | - | - | - | - | - | - |
| 250-250-0403 | P08sx, P10ax | 44 | 5 | 409 | 340 | - | - | - | - | - | - | - | - |
| 250-250-0500 | P08sx, P10ax, P12sx | 85 | 3 | 504 | 400 | 70 | 4 | 504 | 400 | - | - | - | - |
| 250-250-0503 | P08sx, P10ax, P12sx | 48 | 6 | 504 | 400 | - | - | - | - | - | - | - | - |
| 250-250-0505 | P08sx, P10ax, P12sx | 70 | 4 | 504 | 436 | - | - | - | - | - | - | - | - |
| 250-250-0630 | P08sx, P10ax, P12sx | 86 | 4 | 630 | 500 | - | - | - | - | - | - | - | - |
| 250-250-0634 | P08sx, P10ax, P12sx | 41 | 5 | 630 | 480 | - | - | - | - | - | - | - | - |
| 300-300-0400 | P08sx, P10ax | 85 | 3 | 409 | 320 | - | - | - | - | - | - | - | - |
| 300-300-0500 | P08sx, P10ax, P12sx | 89 | 3 | 504 | 400 | - | - | - | - | - | - | - | - |
| 300-300-0503 | P08sx, P10ax, P12sx | 50 | 5 | 504 | 420 | - | - | - | - | - | - | - | - |
| 350-350-0400 | P08sx, P10ax | 110 | 3 | 408 | 330 | - | - | - | - | - | - | - | - |
| 350-350-0500 | P08sx, P10ax, P12sx | 110 | 3 | 508 | 390 | - | - | - | - | - | - | - | - |

| Sizes | Bearing bracket | Impeller type K | | | | Impeller type O | | | | Impeller type F | | | |
|---|---|---|---|---|---|---|---|---|---|---|---|---|---|
| | | Free passage [mm] | Number of vanes | Impeller diameter max. [mm] | Impeller diameter min. [mm] | Free passage [mm] | Number of vanes | Impeller diameter max. [mm] | Impeller diameter min. [mm] | Free passage [mm] | Number of vanes | Impeller diameter max. [mm] | Impeller diameter min. [mm] |
| 350-350-0503 | P08sx, P10ax, P12sx | 65 | 5 | 508 | 472 | - | - | - | - | - | - | - | - |
| 350-350-0504 | P08sx, P10ax, P12sx | 55 | 5 | 507 | 460 | - | - | - | - | - | - | - | - |
| 350-350-0630 | P08sx, P10ax, P12sx | 135 | 3 | 630 | 500 | - | - | - | - | - | - | - | - |
| 350-350-0633 | P08sx, P10ax, P12sx | 75 | 5 | 630 | 500 | - | - | - | - | - | - | - | - |
| 400-400-0500 | P08sx, P10ax, P12sx | 123 | 3 | 508 | 430 | - | - | - | - | - | - | - | - |
| 400-400-0503 | P08sx, P10ax, P12sx | 90 | 4 | 508 | 445 | - | - | - | - | - | - | - | - |
| 400-400-0533 | P10ax, P12sx | 90 | 5 | 538 | 496 | - | - | - | - | - | - | - | - |
| 400-400-0583 | P10ax, P12sx | 90 | 5 | 600 | 550 | - | - | - | - | - | - | - | - |
| 500-400-0710 | P10ax, P12sx, P16ax | 160 | 3 | 730 | 630 | - | - | - | - | - | - | - | - |
| 500-400-0713 | P10ax, P12sx, P16ax | 65 | 5 | 730 | 630 | - | - | - | - | - | - | - | - |
| 500-500-0544 | P10ax, P12sx | 75 | 4 | 572 | 495 | - | - | - | - | - | - | - | - |
| 500-500-0630 | P10ax, P12sx, P16ax | 142 | 3 | 636 | 528 | - | - | - | - | - | - | - | - |
| 500-500-0633 | P10ax, P12sx, P16ax | 90 | 5 | 636 | 534 | - | - | - | - | - | - | - | - |
| 500-500-0634 | P10ax, P12sx, P16ax | 85 | 5 | 636 | 554 | - | - | - | - | - | - | - | - |
| 500-500-0635 | P10ax, P12sx, P16ax | 75 | 5 | 636 | 565 | - | - | - | - | - | - | - | - |
| 500-500-0637 | P10ax, P12sx, P16ax | 85 | 5 | 636 | 540 | - | - | - | - | - | - | - | - |
| 600-600-0663 | P12sx | 80 | 5 | 700 | 620 | - | - | - | - | - | - | - | - |
| 600-600-0669 | P12sx | 80 | 5 | 700 | 630 | - | - | - | - | - | - | - | - |
| 600-600-0710 | P12sx, P16ax | 165 | 3 | 716 | 650 | - | - | - | - | - | - | - | - |
| 600-600-0753 | P16ax | 112 | 5 | 750 | 675 | - | - | - | - | - | - | - | - |
| 600-600-0803 | P16ax | 100 | 5 | 780 | 718 | - | - | - | - | - | - | - | - |
| 600-600-0813 | P16ax | 95 | 5 | 830 | 710 | - | - | - | - | - | - | - | - |
| 600-600-0824 | P16ax | 95 | 5 | 794 | 720 | - | - | - | - | - | - | - | - |
| 600-600-0825 | P16ax | 95 | 5 | 800 | 709 | - | - | - | - | - | - | - | - |
| 600-600-0829 | P16ax | 90 | 6 | 800 | 714 | - | - | - | - | - | - | - | - |
| 600-600-0873 | P16ax | 97 | 5 | 880 | 800 | - | - | - | - | - | - | - | - |
| 600-600-0923 | P20sx | 113 | 5 | 930 | 840 | - | - | - | - | - | - | - | - |
| 700-700-0923 | P20sx | 115 | 5 | 870 | 765 | - | - | - | - | - | - | - | - |
| 700-700-0929 | P20sx | 100 | 6 | 870 | 780 | - | - | - | - | - | - | - | - |
| 800-700-0953 | P20sx | 110 | 5 | 940 | 834 | - | - | - | - | - | - | - | - |
| 800-700-0959 | P20sx | 105 | 5 | 940 | 820 | - | - | - | - | - | - | - | - |
| 800-800-0934 | P20sx | 115 | 5 | 950 | 845 | - | - | - | - | - | - | - | - |
| 800-800-0935 | P20sx | 155 | 4 | 940 | 850 | - | - | - | - | - | - | - | - |
| 800-800-0939 | P20sx | 86 | 6 | 950 | 854 | - | - | - | - | - | - | - | - |
| 800-900-0883 | P20sx | 155 | 4 | 855 | 750 | - | - | - | - | - | - | - | - |
| 900-900-1133 | P20sx | 140 | 5 | 1120 | 1018 | - | - | - | - | - | - | - | - |
| 900-900-1134 | P20sx | 150 | 5 | 1120 | 1008 | - | - | - | - | - | - | - | - |
| 900-900-1137 | P20sx | 120 | 6 | 1122 | 1006 | - | - | - | - | - | - | - | - |
| 900-900-1138 | P20sx | 120 | 6 | 1122 | 1006 | - | - | - | - | - | - | - | - |
| 900-900-1139 | P20sx | 110 | 6 | 1120 | 980 | - | - | - | - | - | - | - | - |

## Bearing bracket

**Table 8:** Technical data of bearing bracket

| Bearing bracket | Gland packing | | | | | | Shaft diameter | | | | Shaft protecting sleeve Gland packing | Shaft protecting sleeve Mechanical seal | Bearings Pump end[9] | Bearings Drive end[10] |
|---|---|---|---|---|---|---|---|---|---|---|---|---|---|---|
| | Bore diameter | Length | Packing ring dimen-sions | Number of packing rings | Width of lantern ring | Clearance for removing the gland packing | In stuffing box housing | At bearings Pump end | At bearings Drive end | At coupling | | | | |
| | [mm] | [mm] | [mm] | [Qty] | [mm] | [mm] | [mm] | [mm] | [mm] | [mm] | [mm] | [mm] | | |
| P03ax | 65 | 64 | 10 x 10 | 4 | 20 | 80 | 33 | 45 | 45 | 32 | 45 | Depending on make | NU 409 | 2 x 7309 B-UA |
| P04ax | 75 | 64 | 10 x 10 | 4 | 20 | 65 | 42 | 55 | 55 | 42 | 55 | | NU 411 | 2 x 7311 B-UA |
| P05ax | 95 | 79 | 12,5 x 12,5 | 4 | 25 | 75 | 53 | 65 | 65 | 48 | 70 | | NU 413 | 2 x 7313 B-UA |
| P06x | 95 | 79 | 12,5 x 12,5 | 4 | 25 | 75 | 65 | 65 | 65 | 60 | 80 | | NU 413 | 2 x 7313 B-UA |
| P08sx | 103 | 132 | 16 x 16 | 4 | 30 | 105 | 80 | 80 | 95 | 75 | 100 | | NU 416 | 2 x 7319 B-UA |
| P10ax | 103 | 152 | 16 x 16 | 4 | 30 | 105 | 100 | 120 | 120 | 95 | 120 | | NU 324 | 2 x 7224 B-UA |
| P12sx | 103 | 172 | 16 x 16 | 4 | 30 | 105 | 120 | 120 | 120 | 110 | 140 | | NU 324 | 2 x 7224 B-UA |
| P16ax | [11] | [11] | [11] | [11] | [11] | [11] | [11] | 160 | 160/140 | 120 | [11] | | NU 232 EC3 | NU 232 EC3[9]<br>QJ 328-N2 |
| P20sx | [11] | [11] | [11] | [11] | [11] | [11] | [11] | 200 | 200/190 | 145 | [11] | | NU 240 E | NJ 238 E[9]<br>29340-E1[12] |

9 To DIN 5412
10 To DIN 628
11 On request
12 To DIN 728

## Selection charts

### KWP K, n = 2900 rpm

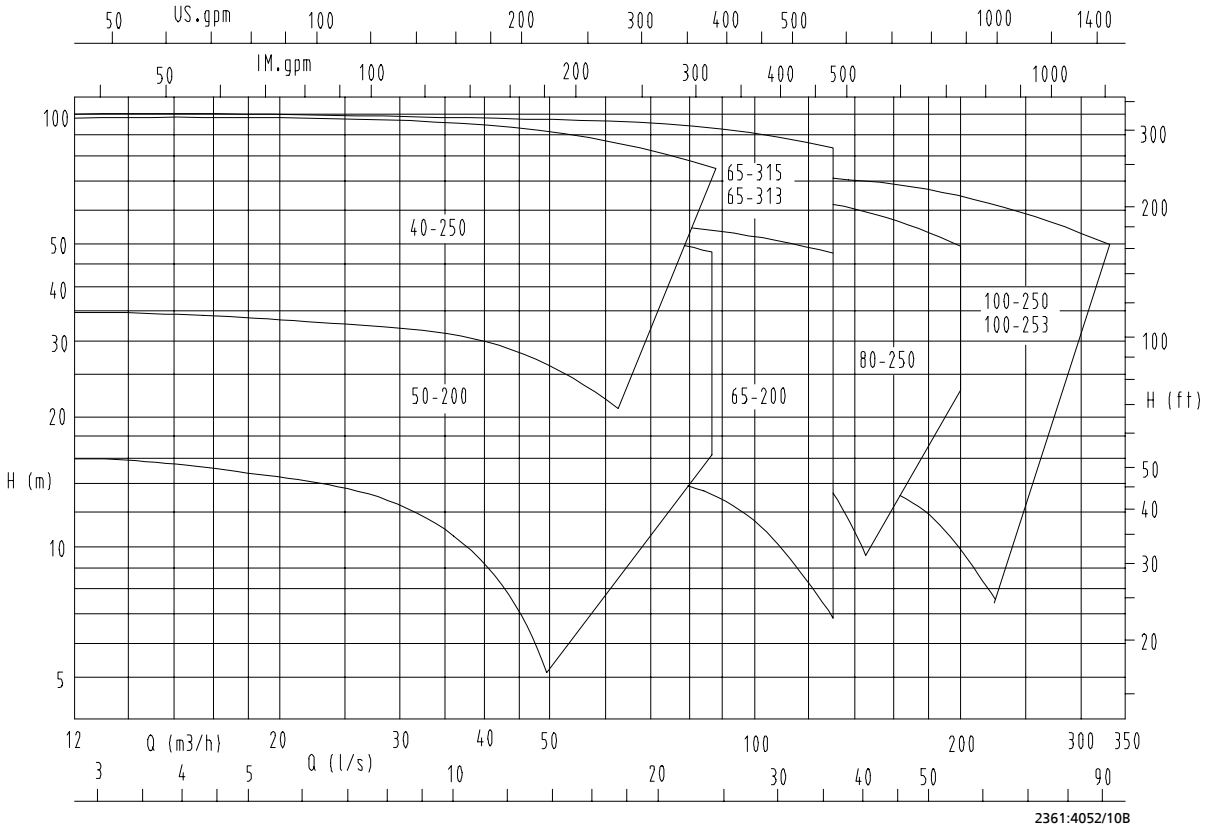


### KWP K, n = 1450 rpm

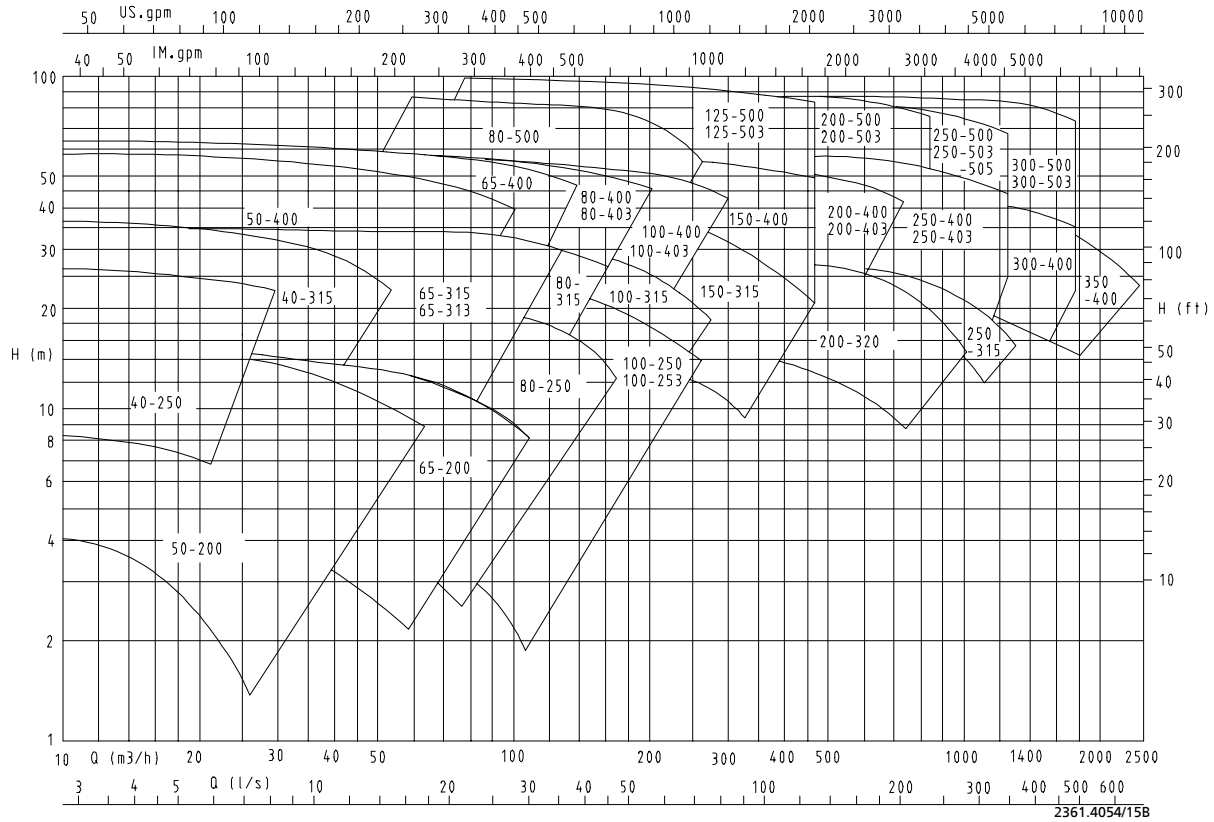


2361.5/12-EN

## KWP K, n = 960 rpm

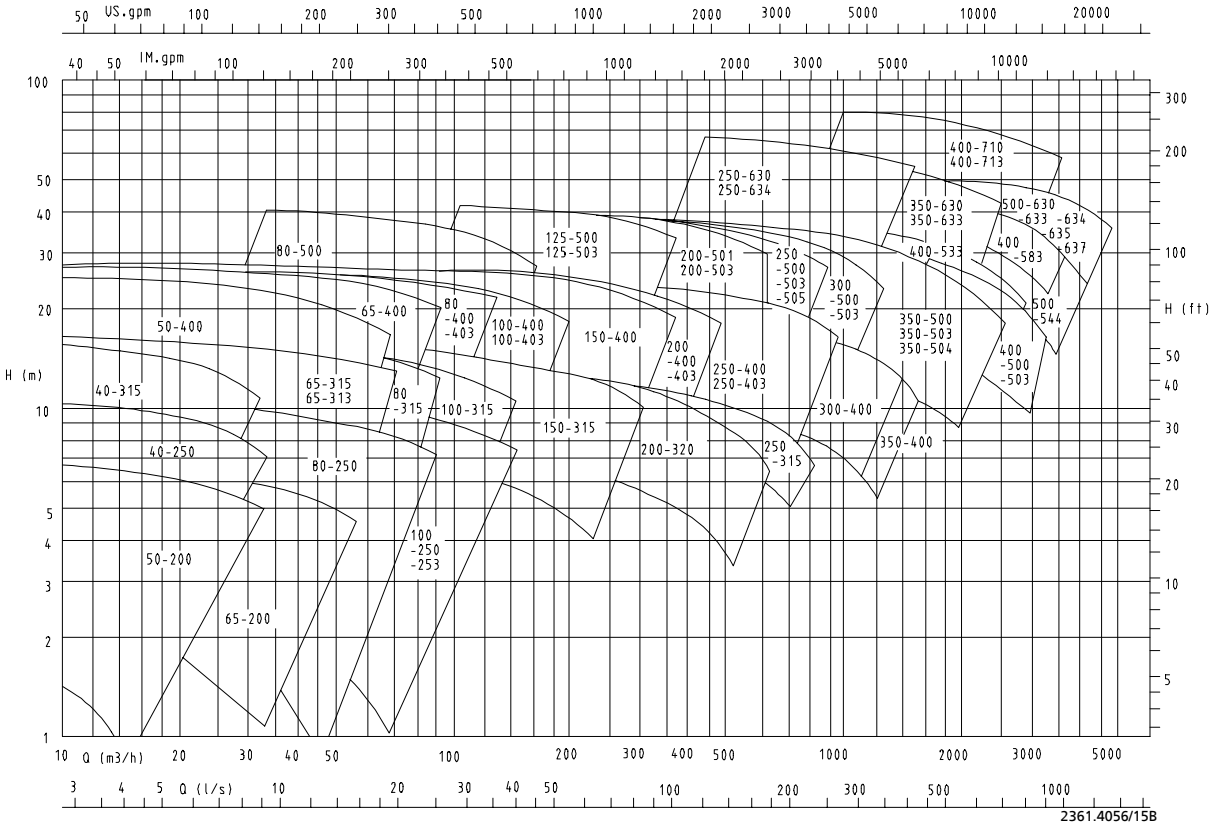


## KWP K, n = 700 rpm

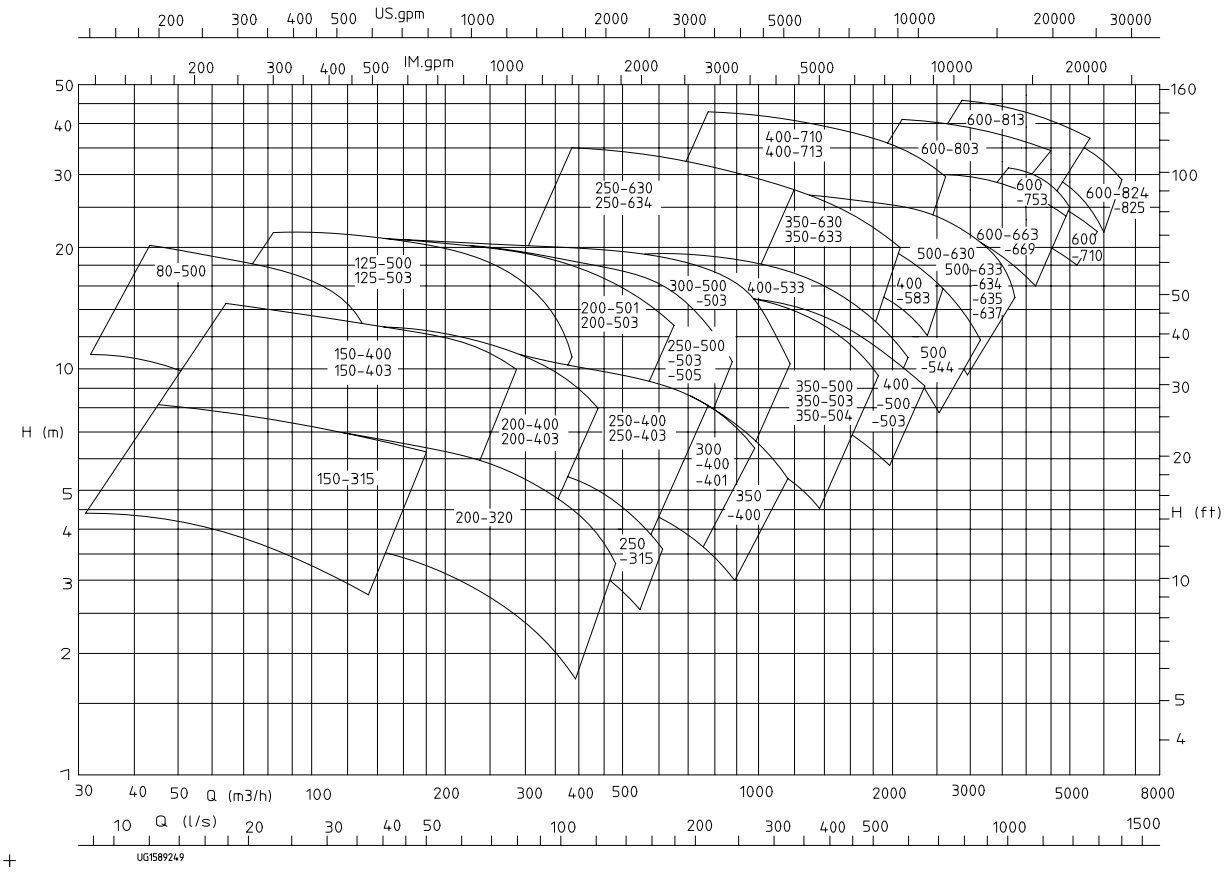


2361.5/12-EN

## KWP K, n = 580 rpm

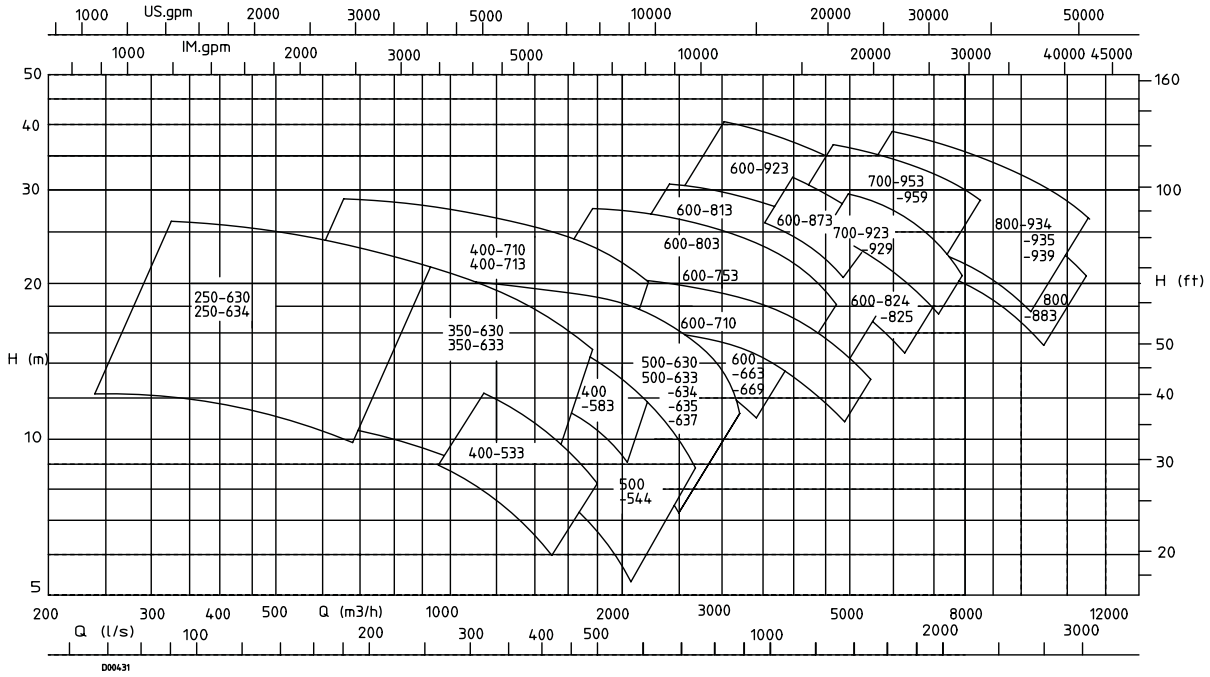


## KWP K, n = 480 rpm

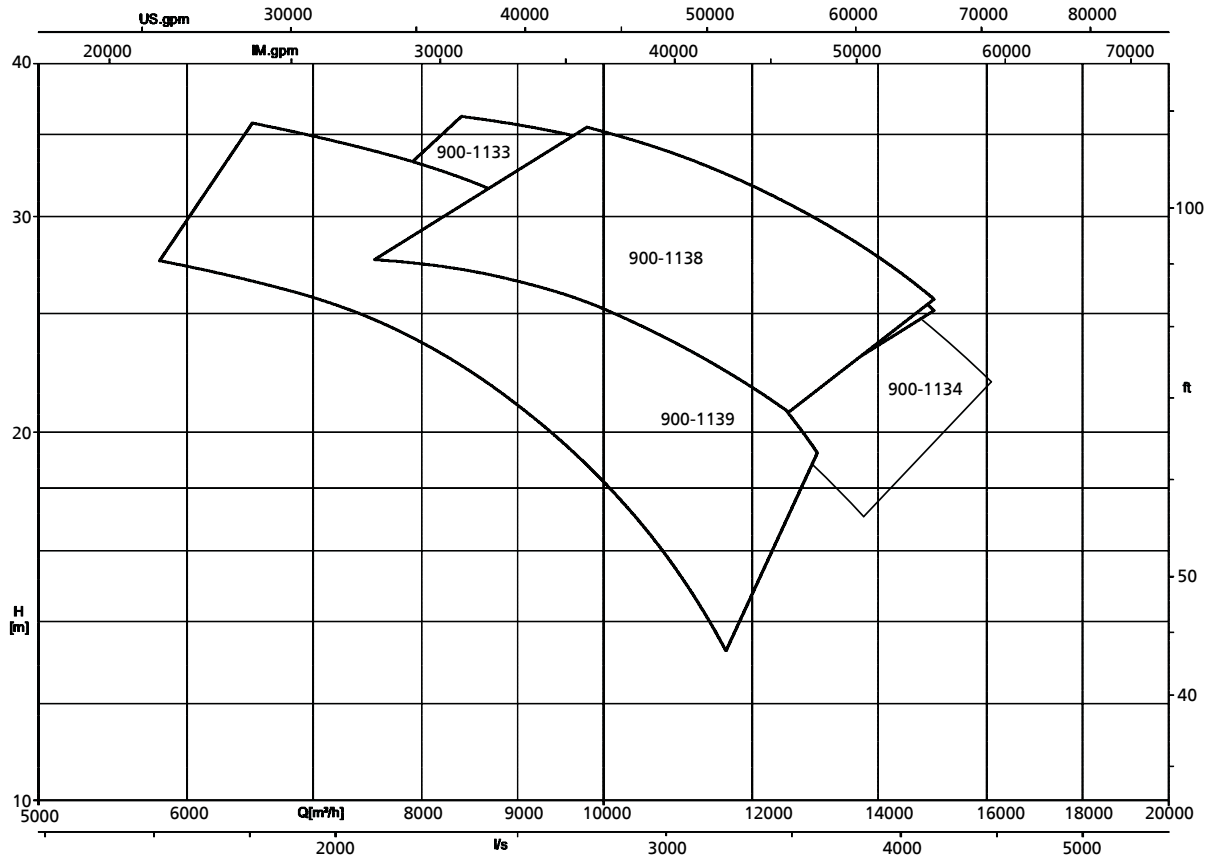

## Dimensions and connections

### Dimensions

### Shaft end, pump feet, pump with bearing brackets P03ax to P06x

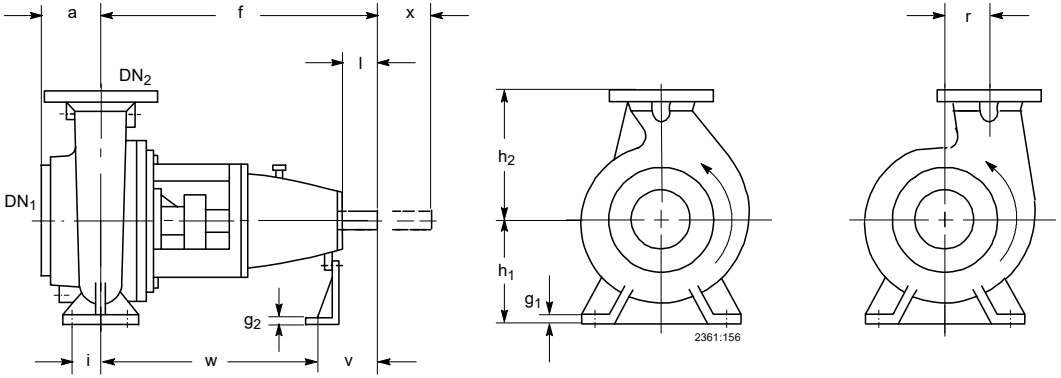


**Fig. 5:** Dimensions of pump with bearing brackets P03ax to P06x

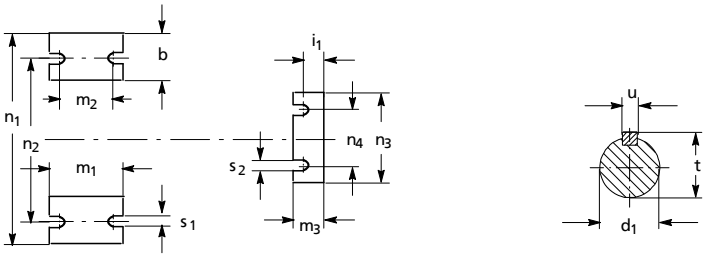


**Fig. 6:** Dimensions of shaft end and pump feet for pumps with bearing brackets P03ax to P06x

**Table 9:** Dimensions of shaft end, pump feet, pumps with bearing brackets P03ax to P06x

| Size | Bearing bracket | $DN_1$ | $DN_2$ | Pump | | | | | | | | | | | | | Shaft end | | | | Pump feet | | | | | | | | |
|---|---|---|---|---|---|---|---|---|---|---|---|---|---|---|---|---|---|---|---|---|---|---|---|---|---|---|---|---|---|
| | | | | a | b | f | $g_1$ | $g_2$ | $h_1$ | $h_2$ | r | $m_1$ | $m_3$ | $n_1$ | $n_3$ | x[13] | $d_1$ | l | t | u | i | $i_1$ | $m_2$ | $n_2$ | $n_4$ | $s_1$ | $s_2$ | v | w |
| | | | | [mm] | | | | | | | | | | | | | | | | | | | | | | | | | |
| 065-040-0250 | P03ax | 65 | 40 | 100 | 65 | 500 | 16 | 4 | 180 | 225 | - | 125 | 48 | 320 | 160 | 100 | 32 | 80 | 35,3 | 10 | 47,5 | 30 | 95 | 250 | 110 | 16 | 14 | 130 | 370 |
| 065-050-0200 | P03ax | 65 | 50 | 112 | 50 | 500 | 14 | 4 | 160 | 200 | - | 100 | 48 | 265 | 160 | 100 | 32 | 80 | 35,3 | 10 | 35 | 30 | 70 | 212 | 110 | 14 | 14 | 130 | 370 |
| 065-050-0201 | P03ax | 65 | 50 | 112 | 50 | 500 | 14 | 4 | 160 | 200 | - | 100 | 48 | 265 | 160 | 100 | 32 | 80 | 35,3 | 10 | 35 | 30 | 70 | 212 | 110 | 14 | 14 | 130 | 370 |
| 080-040-0315 | P04ax | 80 | 40 | 125 | 80 | 530 | 18 | 6 | 225 | 250 | - | 160 | 48 | 400 | 160 | 140 | 42 | 110 | 45,1 | 12 | 60 | 33 | 120 | 315 | 110 | 18 | 14 | 160 | 370 |
| 080-050-0400 | P04ax | 80 | 50 | 120 | 80 | 530 | 18 | 6 | 280 | 325 | - | 160 | 48 | 435 | 160 | 140 | 42 | 110 | 45,1 | 12 | 60 | 33 | 120 | 355 | 110 | 19 | 14 | 160 | 370 |

13 x = clearance for removal (without removing the motor)

| Size | Bearing bracket | $DN_1$ | $DN_2$ | Pump | | | | | | | | | | | | | Shaft end | | | | Pump feet | | | | | | | | |
|---|---|---|---|---|---|---|---|---|---|---|---|---|---|---|---|---|---|---|---|---|---|---|---|---|---|---|---|---|---|
| | | | | a | b | f | $g_1$ | $g_2$ | $h_1$ | $h_2$ | r | $m_1$ | $m_3$ | $n_1$ | $n_3$ | x[13] | $d_1$ | l | t | u | i | $i_1$ | $m_2$ | $n_2$ | $n_4$ | $s_1$ | $s_2$ | v | w |
| | | | | [mm] | | | | | | | | | | | | | | | | | | | | | | | | | |
| 080-065-0200 | P03ax | 80 | 65 | 125 | 65 | 500 | 16 | 4 | 180 | 225 | - | 125 | 48 | 320 | 160 | 100 | 32 | 80 | 35,3 | 10 | 47,5 | 30 | 95 | 250 | 110 | 14 | 14 | 130 | 370 |
| 080-065-0201 | P03ax | 80 | 65 | 125 | 65 | 500 | 16 | 4 | 180 | 225 | - | 125 | 48 | 320 | 160 | 100 | 32 | 80 | 35,3 | 10 | 47,5 | 30 | 95 | 250 | 110 | 14 | 14 | 130 | 370 |
| 080-065-0311 | P04ax | 80 | 65 | 140 | 80 | 530 | 18 | 6 | 225 | 280 | - | 160 | 48 | 400 | 160 | 120 | 42 | 110 | 45,1 | 12 | 60 | 33 | 120 | 315 | 110 | 18 | 14 | 160 | 370 |
| 080-065-0313 | P04ax | 80 | 65 | 140 | 80 | 530 | 18 | 6 | 225 | 280 | - | 160 | 48 | 400 | 160 | 120 | 42 | 110 | 45,1 | 12 | 60 | 33 | 120 | 315 | 110 | 18 | 14 | 160 | 370 |
| 080-065-0315 | P04ax | 80 | 65 | 140 | 80 | 530 | 18 | 6 | 225 | 280 | - | 160 | 48 | 400 | 160 | 120 | 42 | 110 | 45,1 | 12 | 60 | 33 | 120 | 315 | 110 | 18 | 14 | 160 | 370 |
| 080-065-0400 | P04ax | 80 | 65 | 140 | 80 | 530 | 18 | 6 | 280 | 355 | - | 160 | 48 | 435 | 160 | 120 | 42 | 110 | 45,1 | 12 | 60 | 33 | 120 | 355 | 110 | 19 | 14 | 160 | 370 |
| 100-080-0250 | P03ax | 100 | 80 | 125 | 80 | 500 | 18 | 6 | 225 | 280 | - | 160 | 48 | 400 | 160 | 120 | 32 | 80 | 35,3 | 10 | 60 | 30 | 120 | 315 | 110 | 18 | 14 | 130 | 370 |
| 100-080-0251 | P03ax | 100 | 80 | 125 | 80 | 500 | 18 | 6 | 225 | 280 | - | 160 | 48 | 400 | 160 | 120 | 32 | 80 | 35,3 | 10 | 60 | 30 | 120 | 315 | 110 | 18 | 14 | 130 | 370 |
| 100-080-0311 | P04ax | 100 | 80 | 140 | 80 | 530 | 18 | 6 | 225 | 280 | - | 160 | 48 | 400 | 160 | 120 | 42 | 110 | 45,1 | 12 | 60 | 33 | 120 | 315 | 110 | 19 | 14 | 160 | 370 |
| 100-080-0315 | P04ax | 100 | 80 | 140 | 80 | 530 | 18 | 6 | 225 | 280 | - | 160 | 48 | 400 | 160 | 120 | 42 | 110 | 45,1 | 12 | 60 | 33 | 120 | 315 | 110 | 19 | 14 | 160 | 370 |
| 100-080-0400 | P05ax | 100 | 80 | 140 | 80 | 670 | 18 | 12 | 280 | 355 | - | 160 | 60 | 435 | 200 | 120 | 48 | 110 | 51,5 | 14 | 60 | 39 | 120 | 355 | 140 | 18 | 18 | 170 | 500 |
| 100-080-0403 | P05ax | 100 | 80 | 140 | 80 | 670 | 18 | 12 | 280 | 355 | - | 160 | 60 | 435 | 200 | 120 | 48 | 110 | 51,5 | 14 | 60 | 39 | 120 | 355 | 140 | 18 | 18 | 170 | 500 |
| 125-080-0500 | P06x | 125 | 80 | 140 | 100 | 720 | 24 | 12 | 355 | 450 | - | 200 | 60 | 550 | 200 | 160 | 60 | 140 | 64,2 | 18 | 75 | 39 | 150 | 450 | 140 | 23 | 18 | 205 | 515 |
| 125-100-0250 | P04ax | 125 | 100 | 140 | 80 | 530 | 18 | 6 | 225 | 280 | - | 160 | 48 | 400 | 160 | 140 | 42 | 110 | 45,1 | 12 | 60 | 33 | 120 | 315 | 110 | 18 | 14 | 160 | 370 |
| 125-100-0251 | P04ax | 125 | 100 | 140 | 80 | 530 | 18 | 6 | 225 | 280 | - | 160 | 48 | 400 | 160 | 140 | 42 | 110 | 45,1 | 12 | 60 | 33 | 120 | 315 | 110 | 18 | 14 | 160 | 370 |
| 125-100-0253 | P04ax | 125 | 100 | 140 | 80 | 530 | 18 | 6 | 225 | 280 | - | 160 | 48 | 400 | 160 | 140 | 42 | 110 | 45,1 | 12 | 60 | 33 | 120 | 315 | 110 | 18 | 14 | 160 | 370 |
| 125-100-0315 | P04ax | 125 | 100 | 140 | 80 | 530 | 18 | 6 | 250 | 315 | - | 180 | 48 | 400 | 160 | 140 | 42 | 110 | 45,1 | 12 | 60 | 33 | 120 | 315 | 110 | 18 | 14 | 160 | 370 |
| 125-100-0400 | P05ax | 125 | 100 | 140 | 100 | 670 | 20 | 12 | 280 | 355 | - | 200 | 60 | 500 | 200 | 160 | 48 | 110 | 51,5 | 14 | 75 | 39 | 150 | 400 | 140 | 23 | 18 | 170 | 500 |
| 125-100-0403 | P05ax | 125 | 100 | 140 | 100 | 670 | 20 | 12 | 280 | 355 | - | 200 | 60 | 500 | 200 | 160 | 48 | 110 | 51,5 | 14 | 75 | 39 | 150 | 400 | 140 | 23 | 18 | 170 | 500 |
| 150-125-0500 | P06x | 150 | 125 | 160 | 100 | 720 | 24 | 12 | 355 | 450 | - | 200 | 60 | 550 | 200 | 160 | 60 | 140 | 64,2 | 18 | 75 | 39 | 150 | 450 | 140 | 23 | 18 | 205 | 515 |
| 150-125-0503 | P06x | 150 | 125 | 160 | 100 | 720 | 24 | 12 | 355 | 450 | - | 200 | 60 | 550 | 200 | 160 | 60 | 140 | 64,2 | 18 | 75 | 39 | 150 | 450 | 140 | 23 | 18 | 205 | 515 |
| 150-150-0311 | P05ax | 150 | 150 | 180 | 100 | 670 | 22 | 12 | 315 | 400 | - | 200 | 60 | 550 | 200 | 160 | 48 | 110 | 51,5 | 14 | 75 | 39 | 150 | 450 | 140 | 23 | 18 | 170 | 500 |
| 150-150-0315 | P05ax | 150 | 150 | 180 | 100 | 670 | 22 | 12 | 315 | 400 | - | 200 | 60 | 550 | 200 | 160 | 48 | 110 | 51,5 | 14 | 75 | 39 | 150 | 450 | 140 | 23 | 18 | 170 | 500 |
| 150-150-0400 | P05ax | 150 | 150 | 160 | 100 | 670 | 22 | 12 | 315 | 450 | - | 200 | 60 | 550 | 200 | 160 | 48 | 110 | 51,5 | 14 | 75 | 39 | 150 | 450 | 140 | 23 | 18 | 170 | 500 |
| 150-150-0403 | P05ax | 150 | 150 | 160 | 100 | 670 | 22 | 12 | 315 | 450 | - | 200 | 60 | 550 | 200 | 160 | 48 | 110 | 51,5 | 14 | 75 | 39 | 150 | 450 | 140 | 23 | 18 | 170 | 500 |
| 200-200-0320 | P05ax | 200 | 200 | 200 | 100 | 697 | 22 | 12 | 355 | 450 | - | 200 | 60 | 550 | 200 | 160 | 48 | 110 | 51,5 | 14 | 75 | 39 | 150 | 450 | 140 | 22 | 18 | 170 | 527 |
| 200-200-0400 | P06x | 200 | 200 | 180 | 100 | 720 | 24 | 12 | 355 | 500 | - | 200 | 60 | 550 | 200 | 160 | 60 | 140 | 64,2 | 18 | 75 | 39 | 150 | 450 | 140 | 23 | 18 | 205 | 515 |
| 200-200-0403 | P06x | 200 | 200 | 180 | 100 | 720 | 24 | 12 | 355 | 500 | - | 200 | 60 | 550 | 200 | 160 | 60 | 140 | 64,2 | 18 | 75 | 39 | 150 | 450 | 140 | 23 | 18 | 205 | 515 |
| 250-250-0315 | P06x | 250 | 250 | 215 | 130 | 720 | 26 | 12 | 500 | 400 | 315 | 260 | 60 | 800 | 200 | 160 | 60 | 140 | 64,2 | 18 | 95 | 39 | 190 | 670 | 140 | 26 | 18 | 205 | 515 |

## Shaft end, pump feet, pumps with bearing brackets P08sx to P12sx

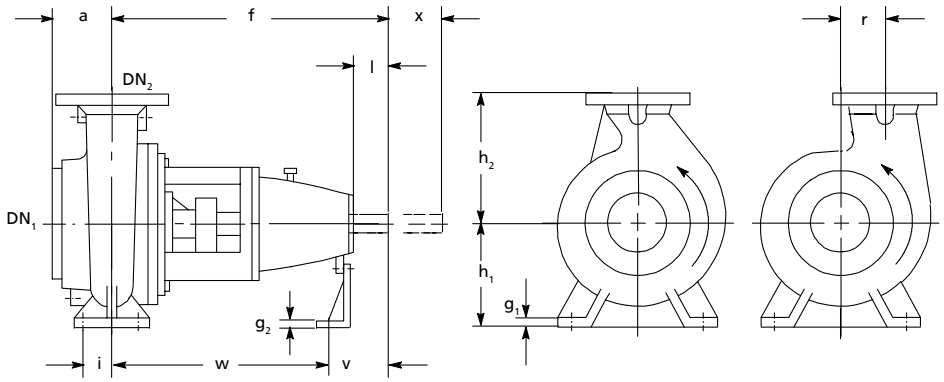


**Fig. 7:** Dimensions of pumps with bearing brackets P08sx to P12sx

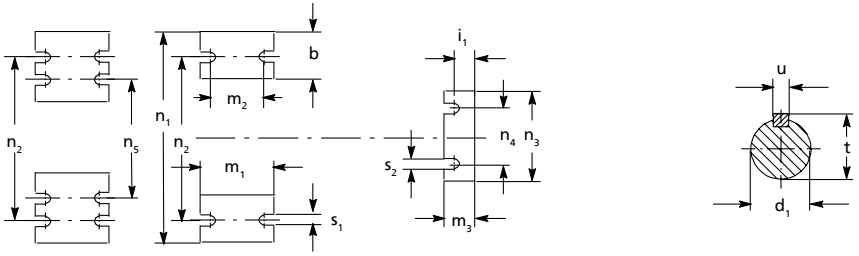


**Fig. 8:** Dimensions of shaft end and pump feet for pumps with bearing brackets P08sx to P12sx

**Table 10:** Dimensions of shaft end, pump feet, pumps with bearing brackets P08sx to P12sx

| Size | Bearing bracket | $DN_1$ | $DN_2$ | Pump | | | | | | | | | | | | Shaft end | | | | Pump feet | | | | | | | | | | |
|---|---|---|---|---|---|---|---|---|---|---|---|---|---|---|---|---|---|---|---|---|---|---|---|---|---|---|---|---|---|---|
| | | | | a | b | $g_1$ | $g_2$ | $h_1$ | $h_2$ | r | $m_1$ | $m_3$ | $n_1$ | $n_3$ | x[14] | $d_1$ | l | t | u | i | $i_1$ | $m_2$ | $n_2$ | $n_4$ | $n_5$ | $s_1$ | $s_2$ | f | v | w |
| | | | | [mm] | | | | | | | | | | | | | | | | | | | | | | | | | | |
| 200-200-0500 | P08sx | 200 | 200 | 200 | 120 | 24 | 12 | 375 | 560 | - | 200 | 60 | 700 | 200 | 250 | 75 | 150 | 97,7 | 20 | 75 | 39 | 150 | 560 | 140 | - | 23 | 18 | 970 | 220 | 750 |
| 200-200-0500 | P10ax | 200 | 200 | 200 | 120 | 24 | 12 | 375 | 560 | - | 200 | 60 | 700 | 200 | 250 | 95 | 220 | 100,2 | 25 | 75 | 39 | 150 | 560 | 140 | - | 23 | 18 | 1160 | 410 | 750 |
| 200-200-0500 | P12sx | 200 | 200 | 200 | 120 | 24 | 12 | 375 | 560 | - | 200 | 60 | 700 | 200 | 250 | 110 | 220 | 116,2 | 28 | 75 | 39 | 150 | 560 | 140 | - | 23 | 18 | 1160 | 410 | 750 |
| 200-200-0501 | P08sx | 200 | 200 | 200 | 120 | 24 | 12 | 375 | 560 | - | 200 | 60 | 700 | 200 | 250 | 75 | 150 | 97,7 | 20 | 75 | 39 | 150 | 560 | 140 | - | 23 | 18 | 970 | 220 | 750 |
| 200-200-0501 | P10ax | 200 | 200 | 200 | 120 | 24 | 12 | 375 | 560 | - | 200 | 60 | 700 | 200 | 250 | 95 | 220 | 100,2 | 25 | 75 | 39 | 150 | 560 | 140 | - | 23 | 18 | 1160 | 410 | 750 |
| 200-200-0501 | P12sx | 200 | 200 | 200 | 120 | 24 | 12 | 375 | 560 | - | 200 | 60 | 700 | 200 | 250 | 110 | 220 | 116,2 | 28 | 75 | 39 | 150 | 560 | 140 | - | 23 | 18 | 1160 | 410 | 750 |
| 200-200-0503 | P08sx | 200 | 200 | 200 | 120 | 24 | 12 | 375 | 560 | - | 200 | 60 | 700 | 200 | 250 | 75 | 150 | 97,7 | 20 | 75 | 39 | 150 | 560 | 140 | - | 23 | 18 | 970 | 220 | 750 |
| 200-200-0503 | P10ax | 200 | 200 | 200 | 120 | 24 | 12 | 375 | 560 | - | 200 | 60 | 700 | 200 | 250 | 95 | 220 | 100,2 | 25 | 75 | 39 | 150 | 560 | 140 | - | 23 | 18 | 1160 | 410 | 750 |
| 200-200-0503 | P12sx | 200 | 200 | 200 | 120 | 24 | 12 | 375 | 560 | - | 200 | 60 | 700 | 200 | 250 | 110 | 220 | 116,2 | 28 | 75 | 39 | 150 | 560 | 140 | - | 23 | 18 | 1160 | 410 | 750 |
| 250-250-0400 | P08sx | 250 | 250 | 180 | 130 | 26 | 12 | 425 | 375 | 300 | 260 | 60 | 800 | 200 | 315 | 75 | 150 | 97,7 | 20 | 95 | 39 | 190 | 670 | 140 | - | 26 | 18 | 1000 | 220 | 780 |

14 x = clearance for removal (without removing the motor)

| Size | Bearing bracket | $DN_1$ | $DN_2$ | Pump | | | | | | | | | | | | Shaft end | | | | Pump feet | | | | | | | | | | |
|---|---|---|---|---|---|---|---|---|---|---|---|---|---|---|---|---|---|---|---|---|---|---|---|---|---|---|---|---|---|---|
| | | | | a | b | $g_1$ | $g_2$ | $h_1$ | $h_2$ | r | $m_1$ | $m_3$ | $n_1$ | $n_3$ | x[14] | $d_1$ | l | t | u | i | $i_1$ | $m_2$ | $n_2$ | $n_4$ | $n_5$ | $s_1$ | $s_2$ | f | v | w |
| | | | | [mm] | | | | | | | | | | | | | | | | | | | | | | | | | | |
| 250-250-0400 | P10ax | 250 | 250 | 180 | 130 | 26 | 12 | 425 | 375 | 300 | 260 | 60 | 800 | 200 | 315 | 95 | 220 | 100,2 | 25 | 95 | 39 | 190 | 670 | 140 | - | 26 | 18 | 1190 | 410 | 780 |
| 250-250-0403 | P08sx | 250 | 250 | 180 | 130 | 26 | 12 | 425 | 375 | 300 | 260 | 60 | 800 | 200 | 315 | 75 | 150 | 97,7 | 20 | 95 | 39 | 190 | 670 | 140 | - | 26 | 18 | 1000 | 220 | 780 |
| 250-250-0403 | P10ax | 250 | 250 | 180 | 130 | 26 | 12 | 425 | 375 | 300 | 260 | 60 | 800 | 200 | 315 | 95 | 220 | 100,2 | 25 | 95 | 39 | 190 | 670 | 140 | - | 26 | 18 | 1190 | 410 | 780 |
| 250-250-0500 | P08sx | 250 | 250 | 200 | 130 | 26 | 12 | 425 | 400 | 315 | 260 | 60 | 800 | 200 | 315 | 75 | 150 | 97,7 | 20 | 95 | 39 | 190 | 670 | 140 | - | 28 | 18 | 1000 | 220 | 780 |
| 250-250-0500 | P10ax | 250 | 250 | 200 | 130 | 26 | 12 | 425 | 400 | 315 | 260 | 60 | 800 | 200 | 315 | 95 | 220 | 100,2 | 25 | 95 | 39 | 190 | 670 | 140 | - | 28 | 18 | 1190 | 410 | 780 |
| 250-250-0500 | P12sx | 250 | 250 | 200 | 130 | 26 | 12 | 425 | 400 | 315 | 260 | 60 | 800 | 200 | 315 | 110 | 220 | 116,2 | 28 | 95 | 39 | 190 | 670 | 140 | - | 28 | 18 | 1190 | 410 | 780 |
| 250-250-0503 | P08sx | 250 | 250 | 200 | 130 | 26 | 12 | 425 | 400 | 315 | 260 | 60 | 800 | 200 | 315 | 75 | 150 | 97,7 | 20 | 95 | 39 | 190 | 670 | 140 | - | 28 | 18 | 1000 | 220 | 780 |
| 250-250-0503 | P10ax | 250 | 250 | 200 | 130 | 26 | 12 | 425 | 400 | 315 | 260 | 60 | 800 | 200 | 315 | 95 | 220 | 100,2 | 25 | 95 | 39 | 190 | 670 | 140 | - | 28 | 18 | 1190 | 410 | 780 |
| 250-250-0503 | P12sx | 250 | 250 | 200 | 130 | 26 | 12 | 425 | 400 | 315 | 260 | 60 | 800 | 200 | 315 | 110 | 220 | 116,2 | 28 | 95 | 39 | 190 | 670 | 140 | - | 28 | 18 | 1190 | 410 | 780 |
| 250-250-0505 | P08sx | 250 | 250 | 200 | 130 | 26 | 12 | 425 | 400 | 315 | 260 | 60 | 800 | 200 | 315 | 75 | 150 | 97,7 | 20 | 95 | 39 | 190 | 670 | 140 | - | 28 | 18 | 1000 | 220 | 780 |
| 250-250-0505 | P10ax | 250 | 250 | 200 | 130 | 26 | 12 | 425 | 400 | 315 | 260 | 60 | 800 | 200 | 315 | 95 | 220 | 100,2 | 25 | 95 | 39 | 190 | 670 | 140 | - | 28 | 18 | 1190 | 410 | 780 |
| 250-250-0505 | P12sx | 250 | 250 | 200 | 130 | 26 | 12 | 425 | 400 | 315 | 260 | 60 | 800 | 200 | 315 | 110 | 220 | 116,2 | 28 | 95 | 39 | 190 | 670 | 140 | - | 28 | 18 | 1190 | 410 | 780 |
| 250-250-0630 | P08sx | 250 | 250 | 200 | 150 | 32 | 12 | 500 | 450 | 400 | 260 | 60 | 900 | 200 | 315 | 75 | 150 | 97,7 | 20 | 95 | 39 | 190 | 750 | 140 | - | 26 | 18 | 1000 | 220 | 780 |
| 250-250-0630 | P10ax | 250 | 250 | 200 | 150 | 32 | 12 | 500 | 450 | 400 | 260 | 60 | 900 | 200 | 315 | 95 | 220 | 100,2 | 25 | 95 | 39 | 190 | 750 | 140 | - | 26 | 18 | 1190 | 410 | 780 |
| 250-250-0630 | P12sx | 250 | 250 | 200 | 150 | 32 | 12 | 500 | 450 | 400 | 260 | 60 | 900 | 200 | 315 | 110 | 220 | 116,2 | 28 | 95 | 39 | 190 | 750 | 140 | - | 26 | 18 | 1190 | 410 | 780 |
| 250-250-0634 | P08sx | 250 | 250 | 200 | 150 | 32 | 12 | 500 | 450 | 400 | 260 | 60 | 900 | 200 | 315 | 75 | 150 | 97,7 | 20 | 95 | 39 | 190 | 750 | 140 | - | 26 | 18 | 1000 | 220 | 780 |
| 250-250-0634 | P10ax | 250 | 250 | 200 | 150 | 32 | 12 | 500 | 450 | 400 | 260 | 60 | 900 | 200 | 315 | 95 | 220 | 100,2 | 25 | 95 | 39 | 190 | 750 | 140 | - | 26 | 18 | 1190 | 410 | 780 |
| 250-250-0634 | P12sx | 250 | 250 | 200 | 150 | 32 | 12 | 500 | 450 | 400 | 260 | 60 | 900 | 200 | 315 | 110 | 220 | 116,2 | 28 | 95 | 39 | 190 | 750 | 140 | - | 26 | 18 | 1190 | 410 | 780 |
| 300-300-0400 | P08sx | 300 | 300 | 180 | 180 | 32 | 12 | 500 | 400 | 390 | 360 | 60 | 900 | 200 | 315 | 75 | 150 | 97,7 | 20 | 125 | 39 | 250 | 750 | 140 | - | 28 | 18 | 1000 | 220 | 780 |
| 300-300-0400 | P10ax | 300 | 300 | 180 | 180 | 32 | 12 | 500 | 400 | 390 | 360 | 60 | 900 | 200 | 315 | 95 | 220 | 100,2 | 25 | 125 | 39 | 250 | 750 | 140 | - | 28 | 18 | 1190 | 410 | 780 |
| 300-300-0500 | P08sx | 300 | 300 | 200 | 130 | 26 | 12 | 450 | 450 | 315 | 260 | 60 | 800 | 200 | 315 | 75 | 150 | 97,7 | 20 | 95 | 39 | 190 | 670 | 140 | - | 28 | 18 | 1000 | 220 | 780 |
| 300-300-0500 | P10ax | 300 | 300 | 200 | 130 | 26 | 12 | 450 | 450 | 315 | 260 | 60 | 800 | 200 | 315 | 95 | 220 | 100,2 | 25 | 95 | 39 | 190 | 670 | 140 | - | 28 | 18 | 1190 | 410 | 780 |
| 300-300-0500 | P12sx | 300 | 300 | 200 | 130 | 26 | 12 | 450 | 450 | 315 | 260 | 60 | 800 | 200 | 315 | 110 | 220 | 116,2 | 28 | 95 | 39 | 190 | 670 | 140 | - | 28 | 18 | 1190 | 410 | 780 |
| 300-300-0503 | P08sx | 300 | 300 | 200 | 130 | 26 | 12 | 450 | 450 | 315 | 260 | 60 | 800 | 200 | 315 | 75 | 150 | 97,7 | 20 | 95 | 39 | 190 | 670 | 140 | - | 28 | 18 | 1000 | 220 | 780 |
| 300-300-0503 | P10ax | 300 | 300 | 200 | 130 | 26 | 12 | 450 | 450 | 315 | 260 | 60 | 800 | 200 | 315 | 95 | 220 | 100,2 | 25 | 95 | 39 | 190 | 670 | 140 | - | 28 | 18 | 1190 | 410 | 780 |
| 300-300-0503 | P12sx | 300 | 300 | 200 | 130 | 26 | 12 | 450 | 450 | 315 | 260 | 60 | 800 | 200 | 315 | 110 | 220 | 116,2 | 28 | 95 | 39 | 190 | 670 | 140 | - | 28 | 18 | 1190 | 410 | 780 |
| 350-350-0400 | P08sx | 350 | 350 | 200 | 225 | 32 | 12 | 560 | 450 | 395 | 400 | 60 | 1080 | 200 | 315 | 75 | 150 | 97,7 | 20 | 150 | 39 | 300 | 1000 | 140 | 750 | 28 | 18 | 1000 | 220 | 780 |
| 350-350-0400 | P10ax | 350 | 350 | 200 | 225 | 32 | 12 | 560 | 450 | 395 | 400 | 60 | 1080 | 200 | 315 | 95 | 220 | 100,2 | 25 | 150 | 39 | 300 | 1000 | 140 | 750 | 28 | 18 | 1190 | 410 | 780 |
| 350-350-0500[15] | P08sx | 350 | 350 | 290 | 225 | 32 | 12 | 560 | 500 | 415 | 400 | 60 | 1080 | 200 | 315 | 75 | 150 | 97,7 | 20 | 150 | 39 | 300 | 1000 | 140 | 750 | 28 | 18 | 1000 | 220 | 780 |
| 350-350-0500[15] | P10ax | 350 | 350 | 290 | 225 | 32 | 12 | 560 | 500 | 415 | 400 | 60 | 1080 | 200 | 315 | 95 | 220 | 100,2 | 25 | 150 | 39 | 300 | 1000 | 140 | 750 | 28 | 18 | 1190 | 410 | 780 |
| 350-350-0500[15] | P12sx | 350 | 350 | 290 | 225 | 32 | 12 | 560 | 500 | 415 | 400 | 60 | 1080 | 200 | 315 | 110 | 220 | 116,2 | 28 | 150 | 39 | 300 | 1000 | 140 | 750 | 28 | 18 | 1190 | 410 | 780 |
| 350-350-0503[15] | P08sx | 350 | 350 | 290 | 225 | 32 | 12 | 560 | 500 | 415 | 400 | 60 | 1080 | 200 | 315 | 75 | 150 | 97,7 | 20 | 150 | 39 | 300 | 1000 | 140 | 750 | 28 | 18 | 1000 | 220 | 780 |
| 350-350-0503[15] | P10ax | 350 | 350 | 290 | 225 | 32 | 12 | 560 | 500 | 415 | 400 | 60 | 1080 | 200 | 315 | 95 | 220 | 100,2 | 25 | 150 | 39 | 300 | 1000 | 140 | 750 | 28 | 18 | 1190 | 410 | 780 |
| 350-350-0503[15] | P12sx | 350 | 350 | 290 | 225 | 32 | 12 | 560 | 500 | 415 | 400 | 60 | 1080 | 200 | 315 | 110 | 220 | 116,2 | 28 | 150 | 39 | 300 | 1000 | 140 | 140 | 28 | 18 | 1190 | 410 | 780 |
| 350-350-0504[15] | P08sx | 350 | 350 | 290 | 225 | 32 | 12 | 560 | 500 | 415 | 400 | 60 | 1080 | 200 | 315 | 75 | 150 | 97,7 | 20 | 150 | 39 | 300 | 1000 | 140 | 750 | 28 | 18 | 1000 | 220 | 780 |

15 No block flange but standard flange with throughholes

| Size | Bearing bracket | $DN_1$ | $DN_2$ | Pump | | | | | | | | | | | | Shaft end | | | | Pump feet | | | | | | | | | | |
|---|---|---|---|---|---|---|---|---|---|---|---|---|---|---|---|---|---|---|---|---|---|---|---|---|---|---|---|---|---|---|
| | | | | a | b | $g_1$ | $g_2$ | $h_1$ | $h_2$ | r | $m_1$ | $m_3$ | $n_1$ | $n_3$ | x[14] | $d_1$ | l | t | u | i | $i_1$ | $m_2$ | $n_2$ | $n_4$ | $n_5$ | $s_1$ | $s_2$ | f | v | w |
| | | | | [mm] | | | | | | | | | | | | | | | | | | | | | | | | | | |
| 350-350-0504[15] | P10ax | 350 | 350 | 290 | 225 | 32 | 12 | 560 | 500 | 415 | 400 | 60 | 1080 | 200 | 315 | 95 | 220 | 100,2 | 25 | 150 | 39 | 300 | 1000 | 140 | 750 | 28 | 18 | 1190 | 410 | 780 |
| 350-350-0504[15] | P12sx | 350 | 350 | 290 | 225 | 32 | 12 | 560 | 500 | 415 | 400 | 60 | 1080 | 200 | 315 | 110 | 220 | 116,2 | 28 | 150 | 39 | 300 | 1000 | 140 | 140 | 28 | 18 | 1190 | 410 | 780 |
| 350-350-0630 | P08sx | 350 | 350 | 250 | 150 | 32 | 12 | 560 | 560 | 400 | 360 | 60 | 900 | 200 | 350 | 75 | 150 | 97,7 | 20 | 125 | 39 | 250 | 750 | 140 | - | 28 | 18 | 1000 | 220 | 780 |
| 350-350-0630 | P10ax | 350 | 350 | 250 | 150 | 32 | 12 | 560 | 560 | 400 | 360 | 60 | 900 | 200 | 350 | 95 | 220 | 100,2 | 25 | 125 | 39 | 250 | 750 | 140 | - | 28 | 18 | 1190 | 410 | 780 |
| 350-350-0630 | P12sx | 350 | 350 | 250 | 150 | 32 | 12 | 560 | 560 | 400 | 360 | 60 | 900 | 200 | 350 | 110 | 220 | 116,2 | 28 | 125 | 39 | 250 | 750 | 140 | - | 28 | 18 | 1190 | 410 | 780 |
| 350-350-0633 | P08sx | 350 | 350 | 250 | 150 | 32 | 12 | 560 | 560 | 400 | 360 | 60 | 900 | 200 | 350 | 75 | 150 | 97,7 | 20 | 125 | 39 | 250 | 750 | 140 | - | 28 | 18 | 1000 | 220 | 780 |
| 350-350-0633 | P10ax | 350 | 350 | 250 | 150 | 32 | 12 | 560 | 560 | 400 | 360 | 60 | 900 | 200 | 350 | 95 | 220 | 100,2 | 25 | 125 | 39 | 250 | 750 | 140 | - | 28 | 18 | 1190 | 410 | 780 |
| 350-350-0633 | P12sx | 350 | 350 | 250 | 150 | 32 | 12 | 560 | 560 | 400 | 360 | 60 | 900 | 200 | 350 | 110 | 220 | 116,2 | 28 | 125 | 39 | 250 | 750 | 140 | - | 28 | 18 | 1190 | 410 | 780 |
| 400-400-0500 | P08sx | 400 | 400 | 260 | 250 | 40 | 16 | 670 | 500 | 490 | 400 | 85 | 1150 | 216 | 400 | 75 | 150 | 97,7 | 20 | 150 | 59 | 300 | 1040 | 140 | 800 | 39 | 18 | 1000 | 220 | 780 |
| 400-400-0500 | P10ax | 400 | 400 | 260 | 250 | 40 | 16 | 670 | 500 | 490 | 400 | 85 | 1150 | 216 | 400 | 95 | 220 | 100,2 | 25 | 150 | 59 | 300 | 1040 | 140 | 800 | 39 | 18 | 1190 | 410 | 790 |
| 400-400-0500 | P12sx | 400 | 400 | 260 | 250 | 40 | 16 | 670 | 500 | 490 | 400 | 85 | 1150 | 216 | 400 | 110 | 220 | 116,2 | 28 | 150 | 59 | 300 | 1040 | 140 | 800 | 39 | 18 | 1190 | 410 | 790 |
| 400-400-0503 | P08sx | 400 | 400 | 260 | 250 | 40 | 16 | 670 | 500 | 490 | 400 | 85 | 1150 | 216 | 400 | 75 | 150 | 97,7 | 20 | 150 | 59 | 300 | 1040 | 140 | 800 | 39 | 18 | 1000 | 220 | 780 |
| 400-400-0503 | P10ax | 400 | 400 | 260 | 250 | 40 | 16 | 670 | 500 | 490 | 400 | 85 | 1150 | 216 | 400 | 95 | 220 | 100,2 | 25 | 150 | 59 | 300 | 1040 | 140 | 800 | 39 | 18 | 1190 | 410 | 790 |
| 400-400-0503 | P12sx | 400 | 400 | 260 | 250 | 40 | 16 | 670 | 500 | 490 | 400 | 85 | 1150 | 216 | 400 | 110 | 220 | 116,2 | 28 | 150 | 59 | 300 | 1040 | 140 | 800 | 39 | 18 | 1190 | 410 | 790 |
| 400-400-0533[15] | P10ax | 400 | 400 | 350 | 250 | 40 | 16 | 630 | 525 | 475 | 360 | 70 | 1150 | 200 | 400 | 95 | 220 | 100,2 | 25 | 125 | 50 | 250 | 1040 | 140 | 800 | 40 | 18 | 1175 | 410 | 760 |
| 400-400-0533[15] | P12sx | 400 | 400 | 350 | 250 | 40 | 16 | 630 | 525 | 475 | 360 | 70 | 1150 | 200 | 400 | 110 | 220 | 116,2 | 28 | 125 | 50 | 250 | 1040 | 140 | 800 | 40 | 18 | 1175 | 410 | 760 |
| 400-400-0583[15] | P10ax | 400 | 400 | 390 | 250 | 40 | 16 | 700 | 540 | 510 | 400 | 110 | 1150 | 216 | 400 | 95 | 220 | 100,2 | 25 | 150 | 50 | 300 | 1040 | 140 | 800 | 40 | 18 | 1180 | 450 | 730 |
| 400-400-0583[15] | P12sx | 400 | 400 | 390 | 250 | 40 | 16 | 700 | 540 | 510 | 400 | 110 | 1150 | 216 | 400 | 110 | 220 | 116,2 | 28 | 150 | 50 | 300 | 1040 | 140 | 800 | 40 | 18 | 1180 | 450 | 730 |
| 500-400-0710[15] | P10ax | 500 | 400 | 350 | 250 | 40 | 16 | 670 | 600 | 480 | 400 | 65 | 1150 | 216 | 350 | 95 | 220 | 100,2 | 25 | 150 | 59 | 300 | 1040 | 140 | 800 | 38 | 18 | 1205 | 425 | 780 |
| 500-400-0710[15] | P12sx | 500 | 400 | 350 | 250 | 40 | 16 | 670 | 600 | 480 | 400 | 65 | 1150 | 216 | 350 | 110 | 220 | 116,2 | 28 | 150 | 59 | 300 | 1040 | 140 | 800 | 38 | 18 | 1205 | 425 | 780 |
| 500-400-0713[15] | P10ax | 500 | 400 | 350 | 250 | 40 | 16 | 670 | 600 | 480 | 400 | 65 | 1150 | 216 | 350 | 95 | 220 | 100,2 | 25 | 150 | 59 | 300 | 1040 | 140 | 800 | 38 | 18 | 1205 | 425 | 780 |
| 500-400-0713[15] | P12sx | 500 | 400 | 350 | 250 | 40 | 16 | 670 | 600 | 480 | 400 | 65 | 1150 | 216 | 350 | 110 | 220 | 116,2 | 28 | 150 | 59 | 300 | 1040 | 140 | 800 | 38 | 18 | 1205 | 425 | 780 |
| 500-500-0544[15] | P10ax | 500 | 500 | 425 | 250 | 40 | 30 | 800 | 630 | 585 | 400 | 90 | 1400 | 600 | 450 | 95 | 220 | 100,2 | 25 | 150 | 60 | 300 | 1290 | 520 | 1050 | 38 | 18 | 1190 | 435 | 755 |
| 500-500-0544[15] | P12sx | 500 | 500 | 425 | 250 | 40 | 30 | 800 | 630 | 585 | 400 | 90 | 1400 | 600 | 450 | 110 | 220 | 116,2 | 28 | 150 | 60 | 300 | 1290 | 520 | 1050 | 38 | 18 | 1190 | 435 | 755 |
| 500-500-0630[15] | P10ax | 500 | 500 | 375 | 250 | 40 | 16 | 750 | 630 | 575 | 400 | 100 | 1400 | 216 | 400 | 95 | 220 | 100,2 | 25 | 150 | 50 | 300 | 1290 | 140 | 1050 | 38 | 18 | 1190 | 410 | 780 |
| 500-500-0630[15] | P12sx | 500 | 500 | 375 | 250 | 40 | 16 | 750 | 630 | 575 | 400 | 100 | 1400 | 216 | 400 | 110 | 220 | 116,2 | 28 | 150 | 50 | 300 | 1290 | 140 | 1050 | 38 | 18 | 1190 | 410 | 780 |
| 500-500-0633[15] | P10ax | 500 | 500 | 375 | 250 | 40 | 16 | 750 | 630 | 575 | 400 | 100 | 1400 | 216 | 400 | 95 | 220 | 100,2 | 25 | 150 | 50 | 300 | 1290 | 140 | 1050 | 38 | 18 | 1190 | 410 | 780 |
| 500-500-0633[15] | P12sx | 500 | 500 | 375 | 250 | 40 | 16 | 750 | 630 | 575 | 400 | 100 | 1400 | 216 | 400 | 110 | 220 | 116,2 | 28 | 150 | 50 | 300 | 1290 | 140 | 1050 | 38 | 18 | 1190 | 410 | 780 |
| 500-500-0634[15] | P10ax | 500 | 500 | 375 | 250 | 40 | 16 | 750 | 630 | 575 | 400 | 100 | 1400 | 216 | 400 | 95 | 220 | 100,2 | 25 | 150 | 50 | 300 | 1290 | 140 | 1050 | 38 | 18 | 1190 | 410 | 780 |
| 500-500-0634[15] | P12sx | 500 | 500 | 375 | 250 | 40 | 16 | 750 | 630 | 575 | 400 | 100 | 1400 | 216 | 400 | 110 | 220 | 116,2 | 28 | 150 | 50 | 300 | 1290 | 140 | 1050 | 38 | 18 | 1190 | 410 | 780 |
| 500-500-0635[15] | P10ax | 500 | 500 | 375 | 250 | 40 | 16 | 750 | 630 | 575 | 400 | 100 | 1400 | 216 | 400 | 95 | 220 | 100,2 | 25 | 150 | 50 | 300 | 1290 | 140 | 1050 | 38 | 18 | 1190 | 410 | 780 |
| 500-500-0635[15] | P12sx | 500 | 500 | 375 | 250 | 40 | 16 | 750 | 630 | 575 | 400 | 100 | 1400 | 216 | 400 | 110 | 220 | 116,2 | 28 | 150 | 50 | 300 | 1290 | 140 | 1050 | 38 | 18 | 1190 | 410 | 780 |
| 500-500-0637[15] | P10ax | 500 | 500 | 375 | 250 | 40 | 16 | 750 | 630 | 575 | 400 | 100 | 1400 | 216 | 400 | 95 | 220 | 100,2 | 25 | 150 | 50 | 300 | 1290 | 140 | 1050 | 38 | 18 | 1190 | 410 | 780 |
| 500-500-0637[15] | P12sx | 500 | 500 | 375 | 250 | 40 | 16 | 750 | 630 | 575 | 400 | 100 | 1400 | 216 | 400 | 110 | 220 | 116,2 | 28 | 150 | 50 | 300 | 1290 | 140 | 1050 | 38 | 18 | 1190 | 410 | 780 |

| Size | Bearing bracket | $DN_1$ | $DN_2$ | Pump | | | | | | | | | | | | Shaft end | | | | Pump feet | | | | | | | | | | |
|---|---|---|---|---|---|---|---|---|---|---|---|---|---|---|---|---|---|---|---|---|---|---|---|---|---|---|---|---|---|---|
| | | | | a | b | $g_1$ | $g_2$ | $h_1$ | $h_2$ | r | $m_1$ | $m_3$ | $n_1$ | $n_3$ | x[14] | $d_1$ | l | t | u | i | $i_1$ | $m_2$ | $n_2$ | $n_4$ | $n_5$ | $s_1$ | $s_2$ | f | v | w |
| | | | | [mm] | | | | | | | | | | | | | | | | | | | | | | | | | | |
| 600-600-0663[15] | P12sx | 600 | 600 | 400 | 250 | 40 | 16 | 800 | 630 | 615 | 400 | 125 | 1400 | 200 | 500 | 110 | 220 | 116,2 | 28 | 150 | 60 | 300 | 1310 | 140 | 1150 | 39 | 18 | 1238 | 457 | 781 |
| 600-600-0669[15] | P12sx | 600 | 600 | 400 | 250 | 40 | 16 | 800 | 630 | 615 | 400 | 125 | 1400 | 200 | 500 | 110 | 220 | 116,2 | 28 | 150 | 60 | 300 | 1310 | 140 | 1150 | 39 | 18 | 1238 | 457 | 781 |
| 600-600-0710[15] | P12sx | 600 | 600 | 500 | 250 | 40 | 18 | 900 | 750 | 680 | 400 | 70 | 1600 | 200 | 500 | 110 | 220 | 116,2 | 28 | 150 | 55 | 300 | 1490 | 140 | 1250 | 38 | 18 | 1240 | 450 | 790 |

## Shaft end, pump feet, pumps with bearing brackets P16ax to P20sx

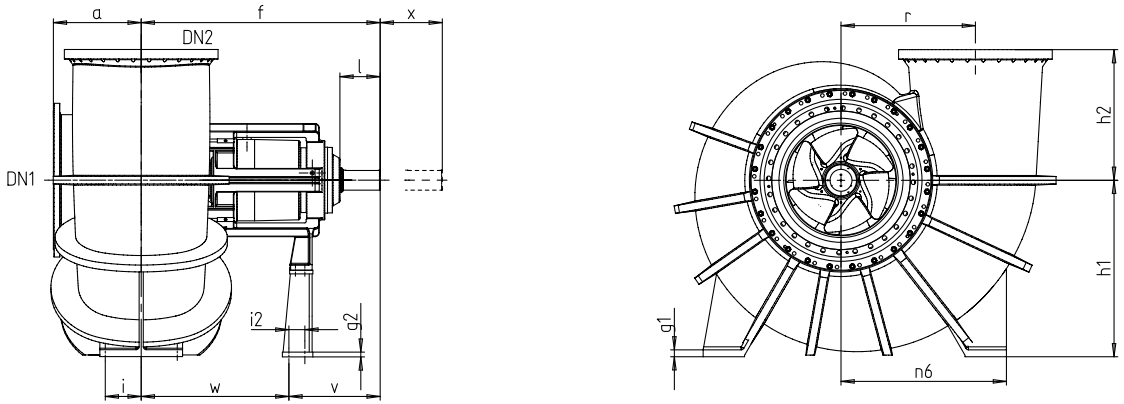


**Fig. 9:** Dimensions of pumps with bearing brackets P16sx and P20sx

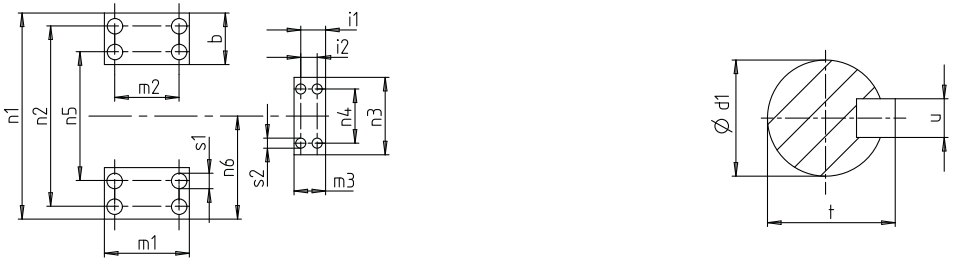


**Fig. 10:** Dimensions of shaft end and pump feet for pumps with bearing brackets P16ax and P20sx

**Table 11:** Dimensions of shaft end, pump feet, pumps with bearing brackets P16ax and P20sx

| Size | Design version | Bearing bracket | $DN_1$ | $DN_2$ | Pump | | | | | | | | | | | | | Shaft end | | | | Pump feet | | | | | | | | | | | |
|---|---|---|---|---|---|---|---|---|---|---|---|---|---|---|---|---|---|---|---|---|---|---|---|---|---|---|---|---|---|---|---|---|---|
| | | | | | a | b | f | $g_1$ | $g_2$ | $h_1$ | $h_2$ | r | $m_1$ | $m_3$ | $n_1$ | $n_3$ | x[16] | $d_1$ | l | t | u | i | $i_1$ | $i_2$ | $m_2$ | $n_2$ | $n_4$ | $n_5$ | $n_6$ | $s_1$ | $s_2$ | v | w |
| | | | | | [mm] | | | | | | | | | | | | | | | | | | | | | | | | | | | | |
| 500-400-0710 | 10 | P16ax | 500 | 400 | 350 | 250 | 1306 | 40 | 16 | 670 | 600 | 480 | 400 | 180 | 1150 | 350 | 350 | 120 | 210 | 127,2 | 32 | 150 | 130 | 85 | 300 | 1040 | 250 | 800 | 575 | 38 | 18 | 476 | 830 |
| 500-400-0713 | 10 | P16ax | 500 | 400 | 350 | 250 | 1306 | 40 | 16 | 670 | 600 | 480 | 400 | 180 | 1150 | 350 | 350 | 120 | 210 | 127,2 | 32 | 150 | 130 | 85 | 300 | 1040 | 250 | 800 | 575 | 38 | 18 | 476 | 830 |
| 500-500-0630 | 10 | P16ax | 500 | 500 | 375 | 250 | 1190 | 40 | [17] | 750 | 630 | 575 | 400 | [17] | 1400 | [17] | 400 | 120 | 210 | 127,2 | 32 | 150 | [17] | [17] | 300 | 1290 | [17] | 1050 | 700 | 38 | [17] | [17] | [17] |
| 500-500-0633 | 10 | P16ax | 500 | 500 | 375 | 250 | 1190 | 40 | [17] | 750 | 630 | 575 | 400 | [17] | 1400 | [17] | 400 | 120 | 210 | 127,2 | 32 | 150 | [17] | [17] | 300 | 1290 | [17] | 1050 | 700 | 38 | [17] | [17] | [17] |

16 x = clearance for removal (without removing the motor)

17 On request

| Size | Design version | Bearing bracket | $DN_1$ | $DN_2$ | Pump | | | | | | | | | | | | | Shaft end | | | | Pump feet | | | | | | | | | | | |
|---|---|---|---|---|---|---|---|---|---|---|---|---|---|---|---|---|---|---|---|---|---|---|---|---|---|---|---|---|---|---|---|---|---|
| | | | | | a | b | f | $g_1$ | $g_2$ | $h_1$ | $h_2$ | r | $m_1$ | $m_3$ | $n_1$ | $n_3$ | x[16] | $d_1$ | l | t | u | i | $i_1$ | $i_2$ | $m_2$ | $n_2$ | $n_4$ | $n_5$ | $n_6$ | $s_1$ | $s_2$ | v | w |
| | | | | | [mm] | | | | | | | | | | | | | | | | | | | | | | | | | | | | |
| 500-500-0634 | 10 | P16ax | 500 | 500 | 375 | 250 | 1190 | 40 | [17] | 750 | 630 | 575 | 400 | [17] | 1400 | [17] | 400 | 120 | 210 | 127,2 | 32 | 150 | [17] | [17] | 300 | 1290 | [17] | 1050 | 700 | 38 | [17] | [17] | [17] |
| 500-500-0635 | 10 | P16ax | 500 | 500 | 375 | 250 | 1190 | 40 | [17] | 750 | 630 | 575 | 400 | [17] | 1400 | [17] | 400 | 120 | 210 | 127,2 | 32 | 150 | [17] | [17] | 300 | 1290 | [17] | 1050 | 700 | 38 | [17] | [17] | [17] |
| 500-500-0637 | 10 | P16ax | 500 | 500 | 375 | 250 | 1190 | 40 | [17] | 750 | 630 | 575 | 400 | [17] | 1400 | [17] | 400 | 120 | 210 | 127,2 | 32 | 150 | [17] | [17] | 300 | 1290 | [17] | 1050 | 700 | 38 | [17] | [17] | [17] |
| 600-600-0710 | 10 | P16ax | 600 | 600 | 500 | 250 | [17] | 40 | [17] | 900 | 750 | 680 | 400 | [17] | 1600 | [17] | 500 | 120 | 210 | 127,2 | 32 | 150 | [17] | [17] | 300 | 1490 | [17] | 1250 | 800 | 38 | [17] | [17] | [17] |
| 600-600-0753 | 10 | P16ax | 600 | 600 | 450 | 240 | 1296 | 40 | 25 | 900 | 680 | 690 | 400 | 180 | 1600 | 350 | 450 | 120 | 210 | 127,2 | 32 | 150 | 130 | 85 | 300 | 1490 | 250 | 1250 | 800 | 39 | 17,5 | 476 | 820 |
| 600-600-0803 | 10 | P16sx | 600 | 600 | 450 | 250 | 1318 | 40 | 25 | 880 | 800 | 675 | 400 | 180 | 1600 | 350 | 460 | 120 | 210 | 127,2 | 32 | 150 | 130 | 85 | 300 | 1490 | 250 | 1250 | 800 | 40 | 18 | 476 | 842 |
| 600-600-0813 | 10 | P16sx | 600 | 600 | 500 | 250 | 1296 | 40 | 25 | 900 | 900 | 730 | 400 | 180 | 1560 | 350 | 450 | 120 | 210 | 127,2 | 32 | 150 | 130 | 85 | 300 | 1450 | 250 | 1250 | 780 | 39 | 17,5 | 476 | 820 |
| 600-600-0824 | 10 | P16ax | 600 | 600 | 445 | 250 | 1363 | 40 | 25 | 950 | 750 | 715 | 400 | 180 | 1560 | 350 | 500 | 120 | 210 | 127,2 | 32 | 150 | 130 | 85 | 300 | 1450 | 250 | 1250 | 800 | 39 | 18 | 476 | 887 |
| 600-600-0825 | 10 | P16ax | 600 | 600 | 445 | 250 | 1363 | 40 | 25 | 950 | 750 | 715 | 400 | 180 | 1560 | 350 | 500 | 120 | 210 | 127,2 | 32 | 150 | 130 | 85 | 300 | 1450 | 250 | 1250 | 800 | 39 | 18 | 476 | 887 |
| 600-600-0829 | 10 | P16ax | 600 | 600 | 445 | 250 | 1363 | 40 | 25 | 950 | 750 | 715 | 400 | 180 | 1560 | 350 | 500 | 120 | 210 | 127,2 | 32 | 150 | 130 | 85 | 300 | 1450 | 250 | 1250 | 800 | 39 | 18 | 476 | 887 |
| 600-600-0873 | 10 | P16ax | 600 | 600 | 470 | 240 | 1300 | 40 | 25 | 970 | 770 | 700 | 400 | 180 | 1650 | 350 | 470 | 120 | 210 | 127,2 | 32 | 150 | 130 | 85 | 300 | 1540 | 250 | 1300 | 825 | 39 | 18 | 476 | 824 |
| 600-600-0923 | 10 | P20sx | 600 | 600 | 500 | 250 | 1642 | 40 | 25 | 900 | 840 | 730 | 400 | 210 | 1560 | 450 | 450 | 145 | 270 | 153 | 36 | 150 | 165 | 110 | 300 | 1450 | 350 | 1250 | 800 | 39 | 17,5 | 658,5 | 983,5 |
| 700-700-0923 | 11 | P20sx | 700 | 700 | 490 | 250 | 1724 | 40 | 25 | 1050 | 690 | 770 | 500 | 210 | 1670 | 450 | 560 | 145 | 270 | 153 | 36 | 200 | 165 | 110 | 400 | 1550 | 350 | 1330 | 850 | 39 | 17,5 | 658,5 | 1065,5 |
| 700-700-0929 | 11 | P20sx | 700 | 700 | 490 | 250 | 1724 | 40 | 25 | 1050 | 690 | 770 | 500 | 210 | 1670 | 450 | 560 | 145 | 270 | 153 | 36 | 200 | 165 | 110 | 400 | 1550 | 350 | 1330 | 850 | 39 | 17,5 | 658,5 | 1065,5 |
| 800-700-0953 | 11 | P20sx | 800 | 700 | 550 | 210 | 1691,5 | 50 | 25 | 1100 | 720 | 770 | 500 | 210 | 1740 | 450 | 590 | 145 | 270 | 153 | 36 | 200 | 165 | 110 | 400 | 1640 | 350 | 1460 | 870 | 39 | 17,5 | 658,5 | 1033,5 |
| 800-700-0959 | 11 | P20sx | 800 | 700 | 550 | 210 | 1691,5 | 50 | 25 | 1100 | 720 | 770 | 500 | 210 | 1740 | 450 | 590 | 145 | 270 | 153 | 36 | 200 | 165 | 110 | 400 | 1640 | 350 | 1460 | 870 | 39 | 17,5 | 658,5 | 1033,5 |
| 800-800-0934 | 11 | P20sx | 800 | 800 | 500 | 240 | 1711,5 | 50 | 25 | 1080 | 760 | 832 | 500 | 210 | 1840 | 450 | 640 | 145 | 270 | 153 | 36 | 200 | 165 | 110 | 400 | 1740 | 350 | 1500 | 920 | 39 | 17,5 | 658,5 | 1053 |
| 800-800-0935 | 11 | P20sx | 800 | 800 | 500 | 240 | 1711,5 | 50 | 25 | 1080 | 760 | 832 | 500 | 210 | 1840 | 450 | 640 | 145 | 270 | 153 | 36 | 200 | 165 | 110 | 400 | 1740 | 350 | 1500 | 920 | 39 | 17,5 | 658,5 | 1053 |
| 800-800-0939 | 11 | P20sx | 800 | 800 | 500 | 240 | 1711,5 | 50 | 25 | 1080 | 760 | 832 | 500 | 210 | 1840 | 450 | 640 | 145 | 270 | 153 | 36 | 200 | 165 | 110 | 400 | 1740 | 350 | 1500 | 920 | 39 | 17,5 | 658,5 | 1053 |
| 800-900-0883 | 10 | P20sx | 800 | 900 | 622 | 300 | 1784 | 50 | 25 | 1250 | 950 | 925 | 600 | 210 | 2250 | 450 | 660 | 145 | 270 | 153 | 36 | 200 | 165 | 110 | 400 | 2140 | 350 | 1860 | 1270 | 39 | 17,5 | 658,5 | 1125 |
| 900-900-1133 | 11 | P20sx | 900 | 900 | 492 | 300 | 1732,5 | 50 | 25 | 1280 | 950 | 975 | 600 | 210 | 2200 | 450 | 695 | 145 | 270 | 153 | 36 | 250 | 165 | 110 | 500 | 2040 | 350 | 1800 | 1200 | 39 | 17,5 | 658,5 | 1075 |
| 900-900-1134 | 11 | P20sx | 900 | 900 | 492 | 300 | 1732,5 | 50 | 25 | 1280 | 950 | 975 | 600 | 210 | 2200 | 450 | 695 | 145 | 270 | 153 | 36 | 250 | 165 | 110 | 500 | 2040 | 350 | 1800 | 1200 | 39 | 17,5 | 658,5 | 1075 |
| 900-900-1137 | 11 | P20sx | 900 | 900 | 492 | 300 | 1732,5 | 50 | 25 | 1280 | 950 | 975 | 600 | 210 | 2200 | 450 | 695 | 145 | 270 | 153 | 36 | 250 | 165 | 110 | 500 | 2040 | 350 | 1800 | 1200 | 39 | 17,5 | 658,5 | 1075 |
| 900-900-1138 | 11 | P20sx | 900 | 900 | 492 | 300 | 1732,5 | 50 | 25 | 1280 | 950 | 975 | 600 | 210 | 2200 | 450 | 695 | 145 | 270 | 153 | 36 | 250 | 165 | 110 | 500 | 2040 | 350 | 1800 | 1200 | 39 | 17,5 | 658,5 | 1075 |
| 900-900-1139 | 11 | P20sx | 900 | 900 | 492 | 300 | 1732,5 | 50 | 25 | 1280 | 950 | 975 | 600 | 210 | 2200 | 450 | 695 | 145 | 270 | 153 | 36 | 250 | 165 | 110 | 500 | 2040 | 350 | 1800 | 1200 | 39 | 17,5 | 658,5 | 1075 |

## Connections

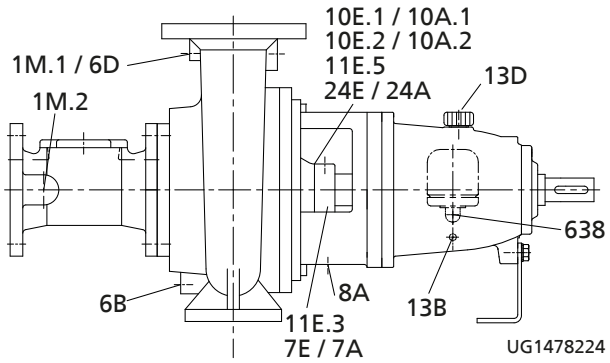


Pump connections

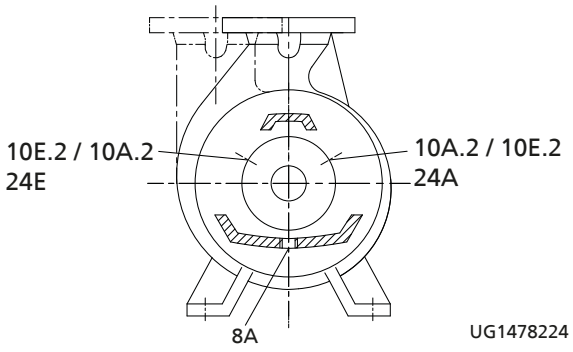


Mechanical seal connections

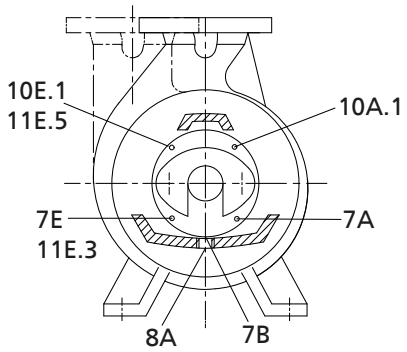


Gland packing connections

**Table 12:** Connections

| Connection | Description | Connection | Description |
|---|---|---|---|
| 1M.1/.2 | Pressure gauge | 10E.1 | Barrier fluid inlet (gland packing) |
| 6B | Casing drain | 10E.2 | Barrier fluid inlet (mechanical seal) |
| 6D | Vent | 11E.3 | Gap flush, outboard (stuffing box housing) |
| 7A | Cooling liquid OUT | 11E.5 | Flushing liquid inlet (gland packing) |
| 7B | Cooling chamber drain | 13B | Oil drain |
| 7E | Cooling liquid IN | 13D | Vent plug |
| 8A | Leakage drain | 24A | Quench liquid OUT |
| 10A.1 | Barrier fluid outlet (gland packing) | 24E | Quench liquid IN |
| 10A.2 | Barrier fluid outlet (mechanical seal) | 638 | Constant level oiler |

**Table 13:** Connection thread sizes depending on the pump size

| Size | 1M.1 | 1M.2 | 6B | 6D | 7A/7E | 7B | 8A | 10A.1/10E.1 | 10A.2[18] (Mechanical seal) Seal cover | 10E.2[18] (Mechanical seal) Discharge cover | 10A.2/10E.2[19] (Mechanical seal) Seal cover | 10A.2/10E.2[20] (Mechanical seal) | 10A.2/10E.2[21] (Mechanical seal) Seal cover | 11E.3 | 11E.5 | 13B | 13D | 24A/24E[22] Seal cover | 24A/24E[23] (Mechanical seal) Seal cover | 638 |
|---|---|---|---|---|---|---|---|---|---|---|---|---|---|---|---|---|---|---|---|---|
| 065-040-0250 | G 1/2 | G 1/2 | G 3/4 | G 1/2 | G 1/4 | G 1/8 | R 1/2 | G 1/4 | G 1/4 | G 1/4 | G 1/4 | NPT 3/8 | G 1/4 | G 1/4 | G 1/4 | G 1/4 | Ø 20 | G 1/4 | G 1/4 | R 1/4 |
| 065-050-0200 | G 1/2 | G 1/2 | G 3/4 | G 1/2 | G 1/4 | G 1/8 | R 1/2 | G 1/4 | G 1/4 | G 1/4 | G 1/4 | NPT 3/8 | G 1/4 | G 1/4 | G 1/4 | G 1/4 | Ø 20 | G 1/4 | G 1/4 | R 1/4 |
| 065-050-0201 | G 1/2 | G 1/2 | G 3/4 | G 1/2 | G 1/4 | G 1/8 | R 1/2 | G 1/4 | G 1/4 | G 1/4 | G 1/4 | NPT 3/8 | G 1/4 | G 1/4 | G 1/4 | G 1/4 | Ø 20 | G 1/4 | G 1/4 | R 1/4 |
| 080-040-0315 | G 1/2 | G 1/2 | G 3/4 | G 1/2 | G 1/4 | G 1/8 | R 1/2 | G 1/4 | G 1/4 | G 1/4 | G 1/4 | NPT 3/8 | G 1/4 | G 1/4 | G 1/4 | G 1/4 | Ø 20 | G 1/4 | G 1/4 | R 1/4 |
| 080-050-0400 | G 1/2 | G 1/2 | G 1 | G 1/2 | G 1/4 | G 1/8 | R 1/2 | G 1/4 | G 1/4 | G 1/4 | G 1/4 | NPT 3/8 | G 1/4 | G 1/4 | G 1/4 | G 1/4 | Ø 20 | G 1/4 | G 1/4 | R 1/4 |
| 080-065-0200 | G 1/2 | G 1/2 | G 3/4 | G 1/2 | G 1/4 | G 1/8 | R 1/2 | G 1/4 | G 1/4 | G 1/4 | G 1/4 | NPT 3/8 | G 1/4 | G 1/4 | G 1/4 | G 1/4 | Ø 20 | G 1/4 | G 1/4 | R 1/4 |
| 080-065-0201 | G 1/2 | G 1/2 | G 3/4 | G 1/2 | G 1/4 | G 1/8 | R 1/2 | G 1/4 | G 1/4 | G 1/4 | G 1/4 | NPT 3/8 | G 1/4 | G 1/4 | G 1/4 | G 1/4 | Ø 20 | G 1/4 | G 1/4 | R 1/4 |
| 080-065-0313 | G 1/2 | G 1/2 | G 3/4 | G 1/2 | G 1/4 | G 1/8 | R 1/2 | G 1/4 | G 1/4 | G 1/4 | G 1/4 | NPT 3/8 | G 1/4 | G 1/4 | G 1/4 | G 1/4 | Ø 20 | G 1/4 | G 1/4 | R 1/4 |
| 080-065-0315 | G 1/2 | G 1/2 | G 3/4 | G 1/2 | G 1/4 | G 1/8 | R 1/2 | G 1/4 | G 1/4 | G 1/4 | G 1/4 | NPT 3/8 | G 1/4 | G 1/4 | G 1/4 | G 1/4 | Ø 20 | G 1/4 | G 1/4 | R 1/4 |
| 080-065-0400 | G 1 | G 1/2 | G 1 | G 1 | G 1/4 | G 1/8 | R 1/2 | G 1/4 | G 1/4 | G 1/4 | G 1/4 | NPT 3/8 | G 1/4 | G 1/4 | G 1/4 | G 1/4 | Ø 20 | G 1/4 | G 1/4 | R 1/4 |
| 100-080-0250 | G 1 | G 1/2 | G 3/4 | G 1 | G 1/4 | G 1/8 | R 1/2 | G 1/4 | G 1/4 | G 1/4 | G 1/4 | NPT 3/8 | G 1/4 | G 1/4 | G 1/4 | G 1/4 | Ø 20 | G 1/4 | G 1/4 | R 1/4 |
| 100-080-0251 | G 1 | G 1/2 | G 3/4 | G 1 | G 1/4 | G 1/8 | R 1/2 | G 1/4 | G 1/4 | G 1/4 | G 1/4 | NPT 3/8 | G 1/4 | G 1/4 | G 1/4 | G 1/4 | Ø 20 | G 1/4 | G 1/4 | R 1/4 |
| 100-080-0311 | G 1 | G 1/2 | G 3/4 | G 1 | G 1/4 | G 1/8 | R 1/2 | G 1/4 | G 1/4 | G 1/4 | G 1/4 | NPT 3/8 | G 1/4 | G 1/4 | G 1/4 | G 1/4 | Ø 20 | G 1/4 | G 1/4 | R 1/4 |
| 100-080-0315 | G 1 | G 1/2 | G 3/4 | G 1 | G 1/4 | G 1/8 | R 1/2 | G 1/4 | G 1/4 | G 1/4 | G 1/4 | NPT 3/8 | G 1/4 | G 1/4 | G 1/4 | G 1/4 | Ø 20 | G 1/4 | G 1/4 | R 1/4 |
| 100-080-0400 | G 1 | G 1/2 | G 1 | G 1 | G 3/8 | G 1/8 | R 1/2 | G 3/8 | G 1/4 | G 3/8 | G 1/4 | NPT 3/8 | G 1/4 | G 3/8 | G 3/8 | G 1/4 | Ø 20 | G 1/4 | G 1/4 | R 1/4 |
| 100-080-0403 | G 1 | G 1/2 | G 1 | G 1 | G 3/8 | G 1/8 | R 1/2 | G 3/8 | G 1/4 | G 3/8 | G 1/4 | NPT 3/8 | G 1/4 | G 3/8 | G 3/8 | G 1/4 | Ø 20 | G 1/4 | G 1/4 | R 1/4 |
| 125-080-0500 | G 1 | G 1/2 | G 1 | G 1 | G 3/8 | G 1/8 | R 1/2 | G 3/8 | G 1/4 | G 3/8 | G 1/4 | NPT 3/8 | G 1/4 | G 3/8 | G 3/8 | G 1/4 | Ø 20 | G 1/4 | G 1/4 | R 1/4 |
| 125-100-0250 | G 1 | G 1/2 | G 1 | G 1 | G 1/4 | G 1/8 | R 1/2 | G 1/4 | G 1/4 | G 1/4 | G 1/4 | NPT 3/8 | G 1/4 | G 1/4 | G 1/4 | G 1/4 | Ø 20 | G 1/4 | G 1/4 | R 1/4 |
| 125-100-0251 | G 1 | G 1/2 | G 1 | G 1 | G 1/4 | G 1/8 | R 1/2 | G 1/4 | G 1/4 | G 1/4 | G 1/4 | NPT 3/8 | G 1/4 | G 1/4 | G 1/4 | G 1/4 | Ø 20 | G 1/4 | G 1/4 | R 1/4 |
| 125-100-0253 | G 1 | G 1/2 | G 1 | G 1 | G 1/4 | G 1/8 | R 1/2 | G 1/4 | G 1/4 | G 1/4 | G 1/4 | NPT 3/8 | G 1/4 | G 1/4 | G 1/4 | G 1/4 | Ø 20 | G 1/4 | G 1/4 | R 1/4 |
| 125-100-0315 | G 1 | G 1/2 | G 1 | G 1 | G 1/4 | G 1/8 | R 1/2 | G 1/4 | G 1/4 | G 1/4 | G 1/4 | NPT 3/8 | G 1/4 | G 1/4 | G 1/4 | G 1/4 | Ø 20 | G 1/4 | G 1/4 | R 1/4 |
| 125-100-0400 | G 1 | G 1/2 | G 1 | G 1 | G 3/8 | G 1/8 | R 1/2 | G 3/8 | G 1/4 | G 3/8 | G 1/4 | NPT 3/8 | G 1/4 | G 3/8 | G 3/8 | G 1/4 | Ø 20 | G 1/4 | G 1/4 | R 1/4 |
| 125-100-0403 | G 1 | G 1/2 | G 1 | G 1 | G 3/8 | G 1/8 | R 1/2 | G 3/8 | G 1/4 | G 3/8 | G 1/4 | NPT 3/8 | G 1/4 | G 3/8 | G 3/8 | G 1/4 | Ø 20 | G 1/4 | G 1/4 | R 1/4 |
| 150-125-0500 | G 1 | G 1/2 | G 1 | G 1 | G 3/8 | G 1/8 | R 1/2 | G 3/8 | G 1/4 | G 3/8 | G 1/4 | NPT 3/8 | G 1/4 | G 3/8 | G 3/8 | G 1/4 | Ø 20 | G 1/4 | G 1/4 | R 1/4 |
| 150-125-0503 | G 1 | G 1/2 | G 1 | G 1 | G 3/8 | G 1/8 | R 1/2 | G 3/8 | G 1/4 | G 3/8 | G 1/4 | NPT 3/8 | G 1/4 | G 3/8 | G 3/8 | G 1/4 | Ø 20 | G 1/4 | G 1/4 | R 1/4 |
| 150-150-0311 | G 1 | G 1/2 | G 1 | G 1 | G 3/8 | G 1/8 | R 1/2 | G 3/8 | G 1/4 | G 3/8 | G 1/4 | NPT 3/8 | G 1/4 | G 3/8 | G 3/8 | G 1/4 | Ø 20 | G 1/4 | G 1/4 | R 1/4 |
| 150-150-0315 | G 1 | G 1/2 | G 1 | G 1 | G 3/8 | G 1/8 | R 1/2 | G 3/8 | G 1/4 | G 3/8 | G 1/4 | NPT 3/8 | G 1/4 | G 3/8 | G 3/8 | G 1/4 | Ø 20 | G 1/4 | G 1/4 | R 1/4 |
| 150-150-0400 | G 1 | G 1/2 | G 1 | G 1 | G 3/8 | G 1/8 | R 1/2 | G 3/8 | G 1/4 | G 3/8 | G 1/4 | NPT 3/8 | G 1/4 | G 3/8 | G 3/8 | G 1/4 | Ø 20 | G 1/4 | G 1/4 | R 1/4 |
| 150-150-0403 | G 1 | G 1/2 | G 1 | G 1 | G 3/8 | G 1/8 | R 1/2 | G 3/8 | G 1/4 | G 3/8 | G 1/4 | NPT 3/8 | G 1/4 | G 3/8 | G 3/8 | G 1/4 | Ø 20 | G 1/4 | G 1/4 | R 1/4 |

18 For mechanical seal type: TS/BU M7N/M7F1A

19 For mechanical seal type: TS/CR 587SP-D DW/M3

20 For mechanical seal type: TS / BU Cartex DN and TS / KSB 4KDC

21 For mechanical seal type: TS/KSB 4KD/M3

22 For mechanical seal type: TA/BU MG1-G6/M3, BU HRZ/M3, CR 587SP-D/M3

23 For mechanical seal type: TA/KSB 4K/M3

| Size | 1M.1 | 1M.2 | 6B | 6D | 7A/7E | 7B | 8A | 10A.1/10E.1 | 10A.2[18] (Mechanical seal) Seal cover | 10E.2[18] (Mechanical seal) Discharge cover | 10A.2/10E.2[19] (Mechanical seal) Seal cover | 10A.2/10E.2[20] (Mechanical seal) | 10A.2/10E.2[21] (Mechanical seal) Seal cover | 11E.3 | 11E.5 | 13B | 13D | 24A/24E[22] Seal cover | 24A/24E[23] (Mechanical seal) Seal cover | 638 |
|---|---|---|---|---|---|---|---|---|---|---|---|---|---|---|---|---|---|---|---|---|
| 200-200-0320 | G 1 | G 1/2 | G 1 | G 1 | G 3/8 | G 1/8 | R 1/2 | G 3/8 | G 1/4 | G 3/8 | G 1/4 | NPT 3/8 | G 1/4 | G 3/8 | G 3/8 | G 1/4 | Ø 20 | G 1/4 | G 1/4 | R 1/4 |
| 200-200-0400 | G 1 | G 1/2 | G 1 | G 1 | G 3/8 | G 1/8 | R 1/2 | G 3/8 | G 1/4 | G 3/8 | G 1/4 | NPT 3/8 | G 1/4 | G 3/8 | G 3/8 | G 1/4 | Ø 20 | G 1/4 | G 1/4 | R 1/4 |
| 200-200-0403 | G 1 | G 1/2 | G 1 | G 1 | G 3/8 | G 1/8 | R 1/2 | G 3/8 | G 1/4 | G 3/8 | G 1/4 | NPT 3/8 | G 1/4 | G 3/8 | G 3/8 | G 1/4 | Ø 20 | G 1/4 | G 1/4 | R 1/4 |
| 200-200-0500 | G 1 | G 1/2 | G 1 | G 1 | G 3/8 | G 1/4 | R 1/2 | G 3/8 | - | - | G 1/2[24] | NPT 3/8[25] | G 1/4 | G 3/8 | G 3/8 | G 1/2 | Ø 20 | G 1/2[24] | G 1/4 | R 1/4 |
| 200-200-0501 | G 1 | G 1/2 | G 1 | G 1 | G 3/8 | G 1/4 | R 1/2 | G 3/8 | - | - | G 1/2[24] | NPT 3/8[25] | G 1/4 | G 3/8 | G 3/8 | G 1/2 | Ø 20 | G 1/2[24] | G 1/4 | R 1/4 |
| 200-200-0503 | G 1 | G 1/2 | G 1 | G 1 | G 3/8 | G 1/4 | R 1/2 | G 3/8 | - | - | G 1/2[24] | NPT 3/8[25] | G 1/4 | G 3/8 | G 3/8 | G 1/2 | Ø 20 | G 1/2[24] | G 1/4 | R 1/4 |
| 250-250-0315 | G 1/2 | G 1/2 | G 1 | G 1 | G 3/8 | G 1/8 | R 1/2 | G 3/8 | G 1/4 | G 3/8 | G 1/4 | NPT 3/8 | G 1/4 | G 3/8 | G 3/8 | G 1/4 | Ø 20 | G 1/4 | G 1/4 | R 1/4 |
| 250-250-0400 | G 1/2 | G 1/2 | G 1 | G 1 | G 3/8 | G 1/4 | R 1/2 | G 3/8 | - | - | G 1/2[24] | NPT 3/8 | G 1/4 | G 3/8 | G 3/8 | G 1/2 | Ø 20 | G 1/2[24] | G 1/4 | R 1/4 |
| 250-250-0403 | G 1/2 | G 1/2 | G 1 | G 1 | G 3/8 | G 1/4 | R 1/2 | G 3/8 | - | - | G 1/2[24] | NPT 3/8 | G 1/4 | G 3/8 | G 3/8 | G 1/2 | Ø 20 | G 1/2[24] | G 1/4 | R 1/4 |
| 250-250-0500 | G 1/2 | G 1/2 | G 1 | G 1 | G 3/8 | G 1/4 | R 1/2 | G 3/8 | - | - | G 1/2[24] | NPT 3/8[25] | G 1/4 | G 3/8 | G 3/8 | G 1/2 | Ø 20 | G 1/2[24] | G 1/4 | R 1/4 |
| 250-250-0503 | G 1/2 | G 1/2 | G 1 | G 1 | G 3/8 | G 1/4 | R 1/2 | G 3/8 | - | - | G 1/2[24] | NPT 3/8[25] | G 1/4 | G 3/8 | G 3/8 | G 1/2 | Ø 20 | G 1/2[24] | G 1/4 | R 1/4 |
| 250-250-0505 | G 1/2 | G 1/2 | G 1 | G 1 | G 3/8 | G 1/4 | R 1/2 | G 3/8 | - | - | G 1/2[24] | NPT 3/8[25] | G 1/4 | G 3/8 | G 3/8 | G 1/2 | Ø 20 | G 1/2[24] | G 1/4 | R 1/4 |
| 250-250-0630 | G 1/2 | G 1/2 | G 1 | G 1 | G 3/8 | G 1/4 | R 1/2 | G 3/8 | - | - | G 1/2[24] | NPT 3/8[25] | G 1/4 | G 3/8 | G 3/8 | G 1/2 | Ø 20 | G 1/2[24] | G 1/4 | R 1/4 |
| 250-250-0634 | G 1/2 | G 1/2 | G 1 | G 1 | G 3/8 | G 1/4 | R 1/2 | G 3/8 | - | - | G 1/2[24] | NPT 3/8[25] | G 1/4 | G 3/8 | G 3/8 | G 1/2 | Ø 20 | G 1/2[24] | G 1/4 | R 1/4 |
| 300-300-0400 | G 1/2 | G 1/2 | G 1 | G 1 | G 3/8 | G 1/4 | R 1/2 | G 3/8 | - | - | G 1/2[24] | NPT 3/8 | G 1/4 | G 3/8 | G 3/8 | G 1/2 | Ø 20 | G 1/2[24] | G 1/4 | R 1/4 |
| 300-300-0500 | G 1/2 | G 1/2 | G 1 | G 1 | G 3/8 | G 1/4 | R 1/2 | G 3/8 | - | - | G 1/2[24] | NPT 3/8[25] | G 1/4 | G 3/8 | G 3/8 | G 1/2 | Ø 20 | G 1/2[24] | G 1/4 | R 1/4 |
| 300-300-0503 | G 1/2 | G 1/2 | G 1 | G 1 | G 3/8 | G 1/4 | R 1/2 | G 3/8 | - | - | G 1/2[24] | NPT 3/8[25] | G 1/4 | G 3/8 | G 3/8 | G 1/2 | Ø 20 | G 1/2[24] | G 1/4 | R 1/4 |
| 350-350-0400 | G 1/2 | G 1/2 | G 1 | G 1 | G 3/8 | G 1/4 | R 1/2 | G 3/8 | - | - | G 1/2[24] | NPT 3/8 | G 1/4 | G 3/8 | G 3/8 | G 1/2 | Ø 20 | G 1/2[24] | G 1/4 | R 1/4 |
| 350-350-0500 | G 1/2 | G 1/2 | G 1 | G 1 | G 3/8 | G 1/4 | R 1/2 | G 3/8 | - | - | G 1/2[24] | NPT 3/8[25] | G 1/4 | G 3/8 | G 3/8 | G 1/2 | Ø 20 | G 1/2[24] | G 1/4 | R 1/4 |
| 350-350-0503 | G 1/2 | G 1/2 | G 1 | G 1 | G 3/8 | G 1/4 | R 1/2 | G 3/8 | - | - | G 1/2[24] | NPT 3/8[25] | G 1/4 | G 3/8 | G 3/8 | G 1/2 | Ø 20 | G 1/2[24] | G 1/4 | R 1/4 |
| 350-350-0504 | G 1/2 | G 1/2 | G 1 | G 1 | G 3/8 | G 1/4 | R 1/2 | G 3/8 | - | - | G 1/2[24] | NPT 3/8[25] | G 1/4 | G 3/8 | G 3/8 | G 1/2 | Ø 20 | G 1/2[24] | G 1/4 | R 1/4 |
| 350-350-0630 | G 1/2 | G 1/2 | G 1 | G 1 | G 3/8 | G 1/4 | R 1/2 | G 3/8 | - | - | G 1/2[24] | NPT 3/8[25] | G 1/4 | G 3/8 | G 3/8 | G 1/2 | Ø 20 | G 1/2[24] | G 1/4 | R 1/4 |
| 350-350-0633 | G 1/2 | G 1/2 | G 1 | G 1 | G 3/8 | G 1/4 | R 1/2 | G 3/8 | - | - | G 1/2[24] | NPT 3/8[25] | G 1/4 | G 3/8 | G 3/8 | G 1/2 | Ø 20 | G 1/2[24] | G 1/4 | R 1/4 |
| 400-400-0500 | G 1/2 | G 1/2 | G 1 1/2 | G 2 | G 3/8 | G 1/4 | R 1/2 | G 3/8 | - | - | G 1/2[24] | NPT 3/8[25] | G 1/4[26] | G 3/8 | G 3/8 | G 1/2 | Ø 20 | G 1/2[24] | G 1/4 | R 1/4 |
| 400-400-0503 | G 1/2 | G 1/2 | G 1 1/2 | G 2 | G 3/8 | G 1/4 | R 1/2 | G 3/8 | - | - | G 1/2[24] | NPT 3/8[25] | G 1/4[26] | G 3/8 | G 3/8 | G 1/2 | Ø 20 | G 1/2[24] | G 1/4 | R 1/4 |
| 400-400-0533 | G 1/2 | G 1/2 | G 1 1/2 | G 2 | G 3/8 | G 1/4 | R 1/2 | G 3/8 | - | - | G 1/2[24] | NPT 3/8[25] | G 1/4[26] | G 3/8 | G 3/8 | G 1/2 | Ø 20 | G 1/2[24] | G 1/4 | R 1/4 |
| 400-400-0583 | G 1/2 | G 1/2 | G 1 1/2 | G 2 | G 3/8 | G 1/4 | R 1/2 | G 3/8 | - | - | G 1/2[24] | NPT 3/8[25] | G 1/4[26] | G 3/8 | G 3/8 | G 1/2 | Ø 20 | G 1/2[24] | G 1/4 | R 1/4 |
| 500-400-0710 | G 1/2 | G 1/2 | G 1 1/2 | G 2 | G 3/8 | G 1/4 | R 1/2 | G 3/8[26] | - | - | G 1/2[24][26] | NPT 3/8[26][25] | G 1/4[26] | G 3/8[26] | G 3/8[26] | G 1/2 | Ø 20 | G 1/2[24][26] | G 1/4[26] | R 1/4 |
| 500-400-0713 | G 1/2 | G 1/2 | G 1 1/2 | G 2 | G 3/8 | G 1/4 | R 1/2 | G 3/8[26] | - | - | G 1/2[24][26] | NPT 3/8[26][25] | G 1/4[26] | G 3/8[26] | G 3/8[26] | G 1/2 | Ø 20 | G 1/2[24][26] | G 1/4[26] | R 1/4 |
| 500-500-0544 | G 1/2 | G 1/2 | G 1 1/2 | G 2 | G 3/8 | G 1/4 | R 1/2 | G 3/8 | - | - | G 1/2[24] | NPT 3/8[25] | G 1/4 | G 3/8 | G 3/8 | G 1/2 | Ø 20 | G 1/2[24] | G 1/4 | R 1/4 |
| 500-500-0630 | G 1/2 | G 1/2 | G 1 1/2 | G 2 | G 3/8 | G 1/4 | R 1/2 | G 3/8[26] | - | - | G 1/2[24][26] | NPT 3/8[26][25] | G 1/4[26] | G 3/8[26] | G 3/8[26] | G 1/2 | Ø 20 | G 1/2[24][26] | G 1/4[26] | R 1/4 |
| 500-500-0633 | G 1/2 | G 1/2 | G 1 1/2 | G 2 | G 3/8 | G 1/4 | R 1/2 | G 3/8[26] | - | - | G 1/2[24][26] | NPT 3/8[26][25] | G 1/4[26] | G 3/8[26] | G 3/8[26] | G 1/2 | Ø 20 | G 1/2[24][26] | G 1/4[26] | R 1/4 |
| 500-500-0634 | G 1/2 | G 1/2 | G 1 1/2 | G 2 | G 3/8 | G 1/4 | R 1/2 | G 3/8[26] | - | - | G 1/2[24][26] | NPT 3/8[26][25] | G 1/4[26] | G 3/8[26] | G 3/8[26] | G 1/2 | Ø 20 | G 1/2[24][26] | G 1/4[26] | R 1/4 |
| 500-500-0635 | G 1/2 | G 1/2 | G 1 1/2 | G 2 | G 3/8 | G 1/4 | R 1/2 | G 3/8[26] | - | - | G 1/2[24][26] | NPT 3/8[26][25] | G 1/4[26] | G 3/8[26] | G 3/8[26] | G 1/2 | Ø 20 | G 1/2[24][26] | G 1/4[26] | R 1/4 |

24 Bearing bracket P08sx/P10ax = G 1/4

25 For mechanical seal type KSB 4KD and bearing bracket P12sx = NPT 1/2

26 Not provided for this size on bearing bracket P16ax

| Size | 1M.1 | 1M.2 | 6B | 6D | 7A/7E | 7B | 8A | 10A.1/10E.1 | 10A.2[18] (Mechanical seal) Seal cover | 10E.2[18] (Mechanical seal) Discharge cover | 10A.2/10E.2[19] (Mechanical seal) Seal cover | 10A.2/10E.2[20] (Mechanical seal) | 10A.2/10E.2[21] (Mechanical seal) Seal cover | 11E.3 | 11E.5 | 13B | 13D | 24A/24E[22] Seal cover | 24A/24E[23] (Mechanical seal) Seal cover | 638 |
|---|---|---|---|---|---|---|---|---|---|---|---|---|---|---|---|---|---|---|---|---|
| 500-500-0637 | G 1/2 | G 1/2 | G 1 1/2 | G 2 | G 3/8 | G 1/4 | R 1/2 | G 3/8[26] | - | - | G 1/2[24][26] | NPT 3/8[26][25] | G 1/4[26] | G 3/8[26] | G 3/8[26] | G 1/2 | Ø 20 | G 1/2[24][26] | G 1/4[26] | R 1/4 |
| 600-600-0663 | G 1/2 | G 1/2 | G 1 1/2 | G 2 | G 3/8 | G 1/4 | R 1/2 | G 3/8 | - | - | G 1/2[24] | NPT 3/8[25] | G 1/4 | G 3/8 | G 3/8 | G 1/2 | Ø 20 | G 1/2[24] | G 1/4 | R 1/4 |
| 600-600-0669 | G 1/2 | G 1/2 | G 1 1/2 | G 2 | G 3/8 | G 1/4 | R 1/2 | G 3/8 | - | - | G 1/2[24] | NPT 3/8[25] | G 1/4 | G 3/8 | G 3/8 | G 1/2 | Ø 20 | G 1/2[24] | G 1/4 | R 1/4 |
| 600-600-0710 | G 1/2 | G 1/2 | G 1 1/2 | G 2 | G 3/8 | G 1/4 | R 1/2 | G 3/8 | - | - | G 1/2[24][26] | NPT 3/8[25] | G 1/4 | G 3/8 | G 3/8 | G 1/2 | Ø 20 | G 1/2[24][26] | G 1/4[26] | R 1/4 |
| 600-600-0753 | - | - | - | - | - | - | R 1 1/2 | - | - | - | - | - | - | - | - | G 1/2 | Ø 20 | - | - | R 1/4 |
| 600-600-0803 | - | - | - | - | - | - | R 1 1/2 | - | - | - | - | - | - | - | - | G 1/2 | Ø 20 | - | - | R 1/4 |
| 600-600-0813 | - | - | - | - | - | - | R 1 1/2 | - | - | - | - | - | - | - | - | G 1/2 | Ø 20 | - | - | R 1/4 |
| 600-600-0824 | - | - | - | - | - | - | R 1 1/2 | - | - | - | - | - | - | - | - | G 1/2 | Ø 20 | - | - | R 1/4 |
| 600-600-0825 | - | - | - | - | - | - | R 1 1/2 | - | - | - | - | - | - | - | - | G 1/2 | Ø 20 | - | - | R 1/4 |
| 600-600-0829 | - | - | - | - | - | - | R 1 1/2 | - | - | - | - | - | - | - | - | G 1/2 | Ø 20 | - | - | R 1/4 |
| 600-600-0873 | - | - | - | - | - | - | R 1 1/2 | - | - | - | - | - | - | - | - | G 1/2 | Ø 20 | - | - | R 1/4 |
| 600-600-0923 | - | - | - | - | - | - | R 1 1/2 | - | - | - | - | - | - | - | - | G 1/2 | Ø 20 | - | - | R 1/4 |
| 700-700-0923 | - | - | - | - | - | - | R 1 1/2 | - | - | - | - | - | - | - | - | G 1/2 | Ø 20 | - | - | R 1/4 |
| 700-700-0929 | - | - | - | - | - | - | R 1 1/2 | - | - | - | - | - | - | - | - | G 1/2 | Ø 20 | - | - | R 1/4 |
| 800-700-0953 | - | - | - | - | - | - | R 1 1/2 | - | - | - | - | - | - | - | - | G 1/2 | Ø 20 | - | - | R 1/4 |
| 800-700-0959 | - | - | - | - | - | - | R 1 1/2 | - | - | - | - | - | - | - | - | G 1/2 | Ø 20 | - | - | R 1/4 |
| 800-800-0934 | - | - | - | - | - | - | R 1 1/2 | - | - | - | - | - | - | - | - | G 1/2 | Ø 20 | - | - | R 1/4 |
| 800-800-0935 | - | - | - | - | - | - | R 1 1/2 | - | - | - | - | - | - | - | - | G 1/2 | Ø 20 | - | - | R 1/4 |
| 800-800-0939 | - | - | - | - | - | - | R 1 1/2 | - | - | - | - | - | - | - | - | G 1/2 | Ø 20 | - | - | R 1/4 |
| 800-900-0883 | - | - | - | - | - | - | R 1 1/2 | - | - | - | - | - | - | - | - | G 1/2 | Ø 20 | - | - | R 1/4 |
| 900-900-1133 | - | - | - | - | - | - | R 1 1/2 | - | - | - | - | - | - | - | - | G 1/2 | Ø 20 | - | - | R 1/4 |
| 900-900-1134 | - | - | - | - | - | - | R 1 1/2 | - | - | - | - | - | - | - | - | G 1/2 | Ø 20 | - | - | R 1/4 |
| 900-900-1137 | - | - | - | - | - | - | R 1 1/2 | - | - | - | - | - | - | - | - | G 1/2 | Ø 20 | - | - | R 1/4 |
| 900-900-1138 | - | - | - | - | - | - | R 1 1/2 | - | - | - | - | - | - | - | - | G 1/2 | Ø 20 | - | - | R 1/4 |
| 900-900-1139 | - | - | - | - | - | - | R 1 1/2 | - | - | - | - | - | - | - | - | G 1/2 | Ø 20 | - | - | R 1/4 |

## General arrangement drawings with list of components

### Pump with bearing bracket P03ax to P06x

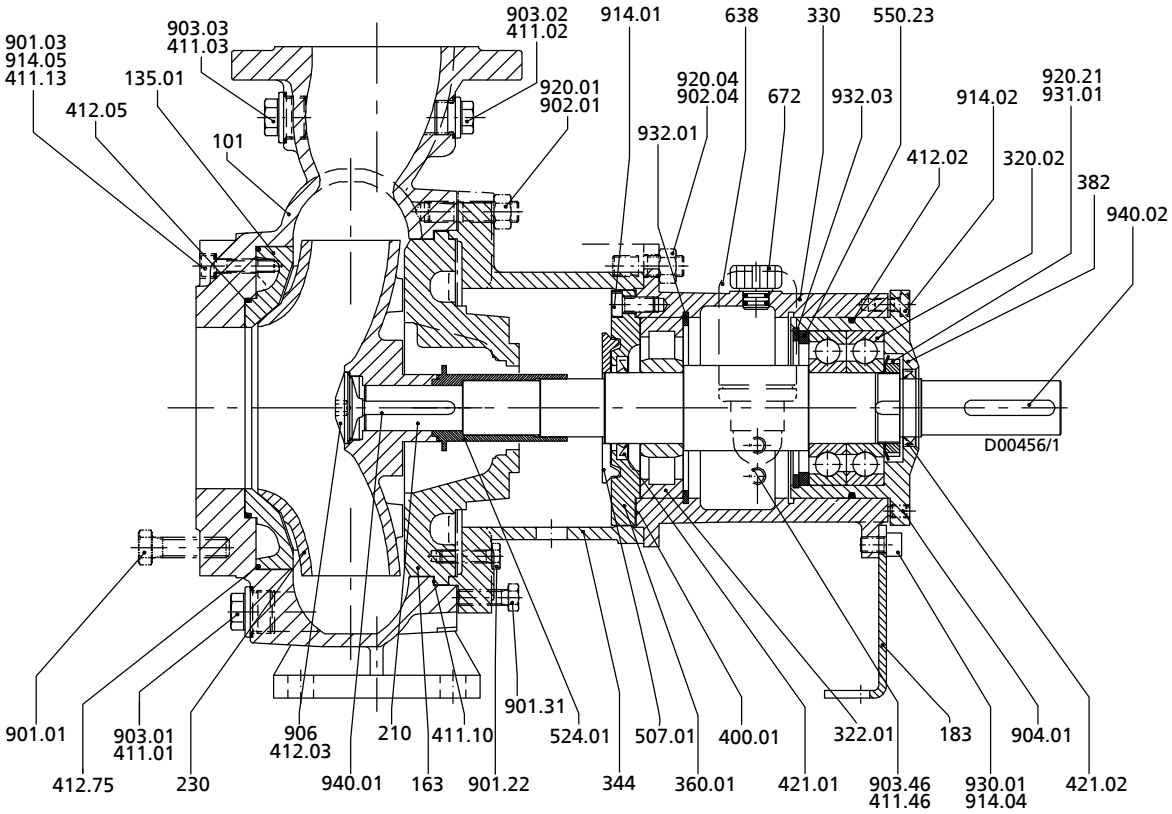


**Fig. 11:** General assembly drawing of pump with bearing bracket P03ax to P06x

**Table 14:** List of components

| Part No. | Description | Part No. | Description |
|---|---|---|---|
| 101 | Pump casing | 507.01 | Thrower |
| 135.01[27)] | Wear plate | 524.01 | Shaft protecting sleeve |
| 163 | Discharge cover | 550.23 | Disc |
| 183 | Support foot | 638 | Constant level oiler |
| 210 | Pump shaft | 672 | Vent |
| 230 | Impeller | 901.01/.03/.22/.31 | Hexagon head bolt |
| 320.02 | Rolling element bearings | 902.01/.04 | Stud |
| 322.01 | Radial roller bearing | 903.01/.02/.03/.46 | Screw plug |
| 330 | Bearing bracket | 904.01 | Grub screw |
| 344 | Bearing bracket lantern | 906 | Impeller screw |
| 360.01 | Bearing cover | 914.01/.02/.04/.05 | Hexagon socket head cap screw |
| 382 | Bearing carrier | 920.01/.04/.21 | Nut |
| 400.01 | Gasket | 930.01 | Safety device |
| 411.01/.02/.03/.10/.13/.46 | Joint ring | 931.01 | Lock washer |
| 412.02/.03/.05/.75 | O-ring | 932.01/.03 | Circlip |
| 421.01/.02 | Lip seal | 940.01/.02 | Key |

2361.5/12-EN

27 Sizes KWPK 250-250-315, 300-300-400, 350-350-400 and 400-400-500 are equipped with a casing wear ring 502.01 instead of a wear plate.

### Pump with bearing bracket P08sx to P12sx

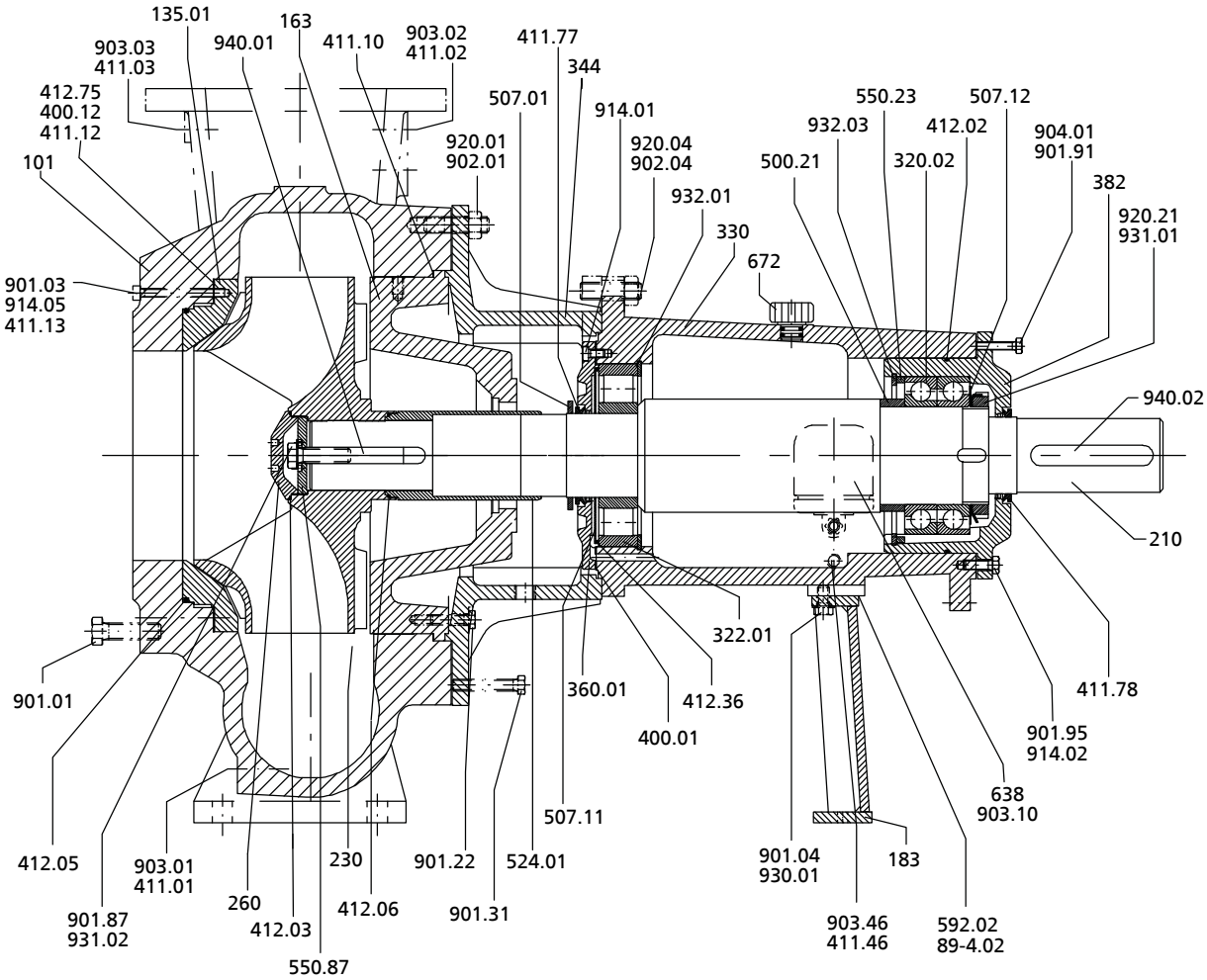


**Fig. 12:** General assembly drawing of pump with bearing bracket P08sx to P12sx

**Table 15:** List of components

| Part No. | Description | Part No. | Description |
|---|---|---|---|
| 101 | Pump casing | 507.01/.11/.12 | Thrower |
| 135.01 | Wear plate | 524.01 | Shaft protecting sleeve |
| 163 | Discharge cover | 550.23/.87 | Disc |
| 183 | Support foot | 592.02 | Base |
| 210 | Pump shaft | 638 | Constant level oiler |
| 230 | Impeller | 672 | Vent |
| 260 | Impeller hub cap | 89-4.02 | Shim |
| 320.02 | Rolling element bearings | 901.01/.03/.04/.22/.31./87/.91 /.95 | Hexagon head bolt |
| 322.01 | Radial roller bearing | 902.01/.04 | Stud |
| 330 | Bearing bracket | 903.01/.02/.03/.10/.46 | Screw plug |
| 344 | Bearing bracket lantern | 904.01 | Grub screw |
| 360.01 | Bearing cover | 914.01/.02/.05 | Hexagon socket head cap screw |
| 382 | Bearing carrier | 920.01/.04/.21 | Nut |
| 400.01/.12 | Gasket | 930.01 | Safety device |
| 411.01/.02/.03/.10/.12/.13/.46 /.77/.78 | Joint ring | 931.01./02 | Lock washer |
| 412.02/.03/.05/.06/.36/.75 | O-ring | 932.01/.03 | Circlip |
| 500.21 | Ring | 940.01/.02 | Key |

**Pumps with bearing brackets P10ax to P12sx (sizes 500-400-0710, 500-400-0713)**

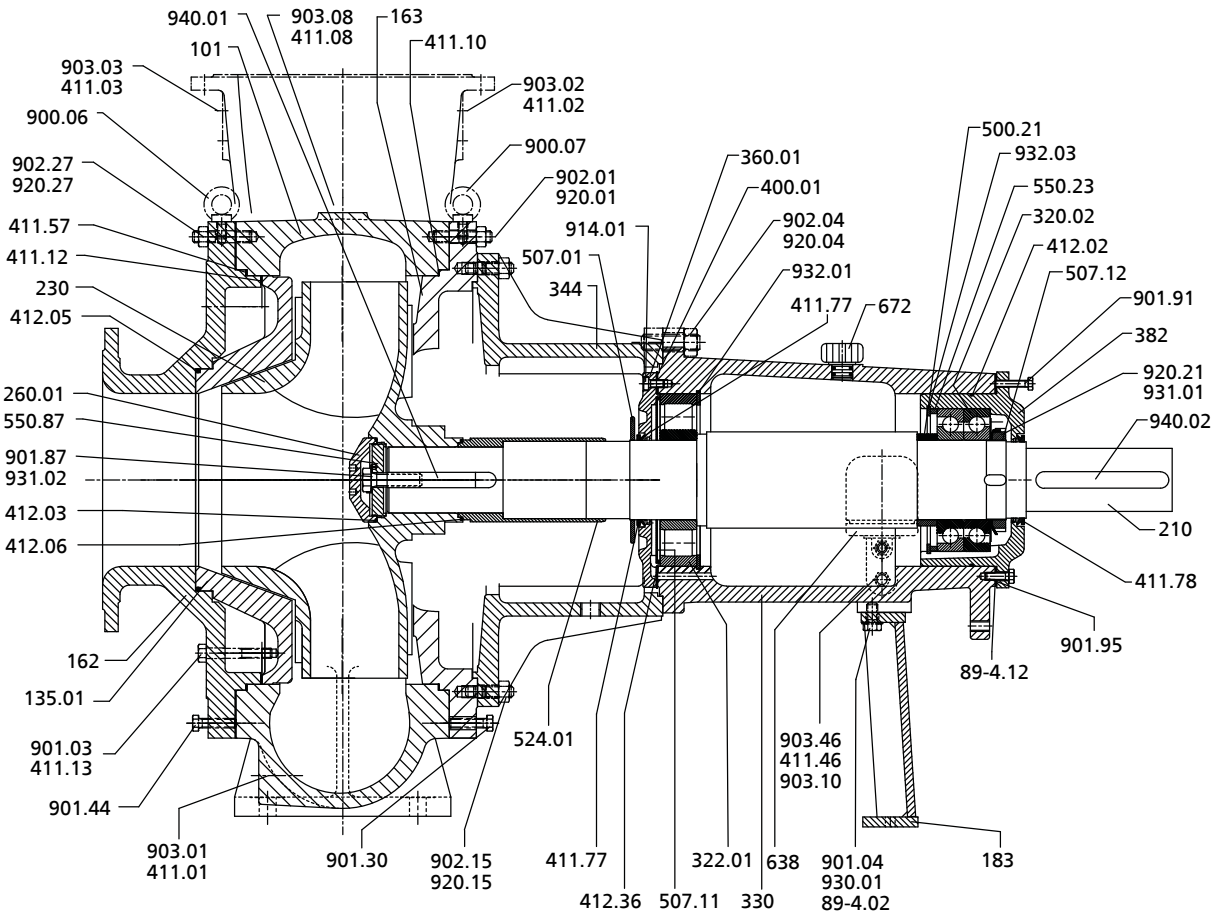


**Fig. 13:** General assembly drawing of pump with bearing brackets P10ax to P12sx (sizes 500-400-0710, 500-400-0713)

**Table 16:** List of components

| Part No. | Description | Part No. | Description |
|---|---|---|---|
| 101 | Pump casing | 507.01/.11/.12 | Thrower |
| 135.01 | Wear plate | 524.01 | Shaft protecting sleeve |
| 162 | Suction cover | 550.23/.87 | Disc |
| 163 | Discharge cover | 638 | Constant level oiler |
| 183 | Support foot | 672 | Vent |
| 210 | Shaft | 89-4.02/.12 | Shim |
| 230 | Impeller | 900.06/.07 | Bolt |
| 260.01 | Impeller hub cap | 901.03/.04/.30/.44/.87/.91/.95 | Hexagon head bolt |
| 320.02 | Rolling element bearings | 902.01/.04/.15/.27 | Stud |
| 322.01 | Radial roller bearing | 903.01/.02/.03/.08/.10/.46 | Screw plug |
| 330 | Bearing bracket | 914.01 | Hexagon socket head cap screw |
| 344 | Bearing bracket lantern | 920.01/.04/.15/.21/.27 | Nut |
| 360.01 | Bearing cover | 930.01 | Safety device |
| 400.01 | Gasket | 931.01/.02 | Lock washer |
| 411.01/.02/.03/.08/.10/.12/.13 /.46/.57/.77/.78 | Seal ring | 932.01/.03 | Circlip |
| 412.02/.03/.05/.06/.36 | O-ring | 940.01/.02 | Key |
| 500.21 | Ring | | |

2361.5/12-EN

## Pumps with bearing bracket P12sx (sizes 500-500-0544, 600-660-0663, 600-600-0669)

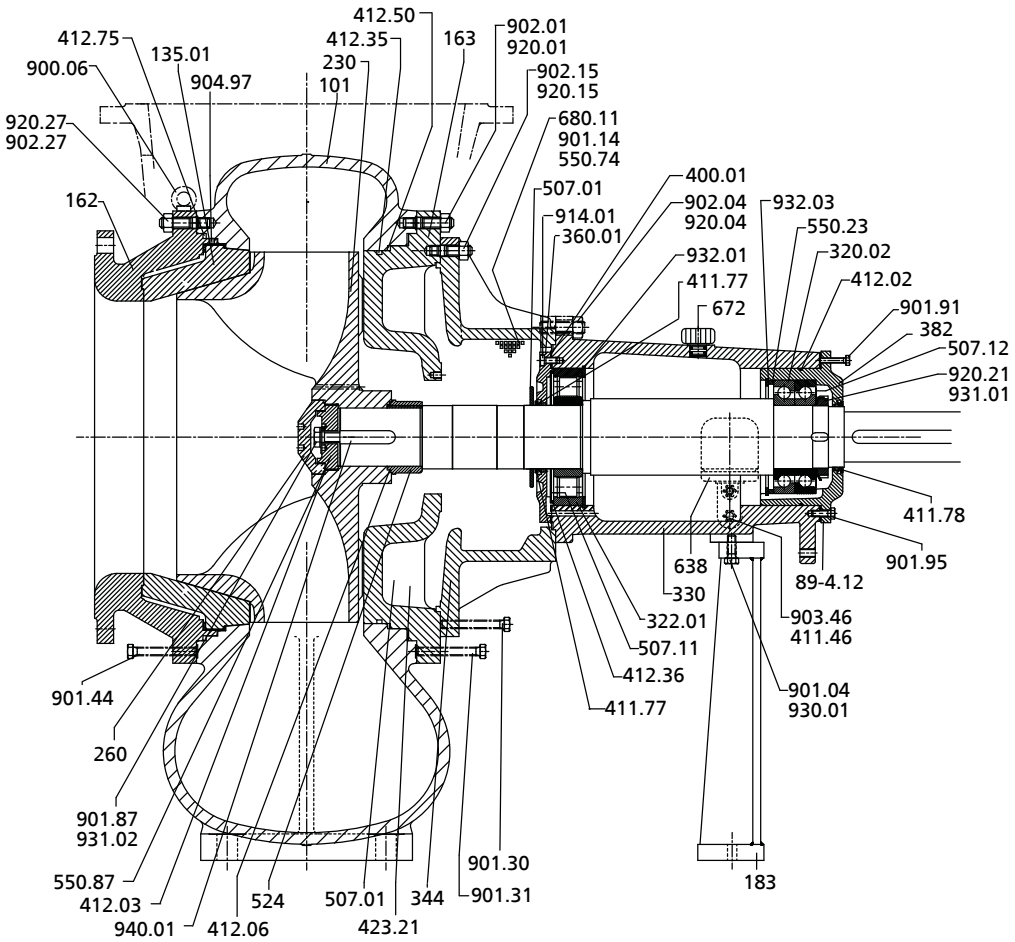


**Fig. 14:** General assembly drawing of pump with bearing bracket P12sx (sizes 500-500-0544, 600-660-0663, 600-600-0669)

**Table 17:** List of components

| Part No. | Description | Part No. | Description |
|---|---|---|---|
| 101 | Pump casing | 524 | Shaft protecting sleeve |
| 135.01 | Wear plate | 550.23/.74/.87 | Disc |
| 162 | Suction cover | 638 | Constant level oiler |
| 163 | Discharge cover | 672 | Vent |
| 183 | Support foot | 680.11 | Guard |
| 230 | Impeller | 89-4.12 | Shim |
| 260 | Impeller hub cap | 900.06 | Bolt |
| 320.02 | Rolling element bearings | 901.04/.14/.30/.31/.44/.87/.91 /.95 | Hexagon head bolt |
| 322.01 | Radial roller bearing | 902.01/.04/.15/.27 | Stud |
| 330 | Bearing bracket | 903.46 | Screw plug |
| 344 | Bearing bracket lantern | 904.97 | Grub screw |
| 360.01 | Bearing cover | 914.01 | Hexagon socket head cap screw |
| 382 | Bearing carrier | 920.01/.04/.15/.21/.27 | Nut |
| 400.01 | Gasket | 930.01 | Safety device |
| 411.46/.77/.78 | Seal ring | 931.01/.02 | Lock washer |
| 412.02/.03/.06/.35/.36/.50/.75 | O-ring | 932.01/.03 | Circlip |
| 423.21 | Labyrinth ring | 940.01 | Key |
| 507.01/.11/.12 | Thrower | | |

### Pump with bearing bracket P16ax V10

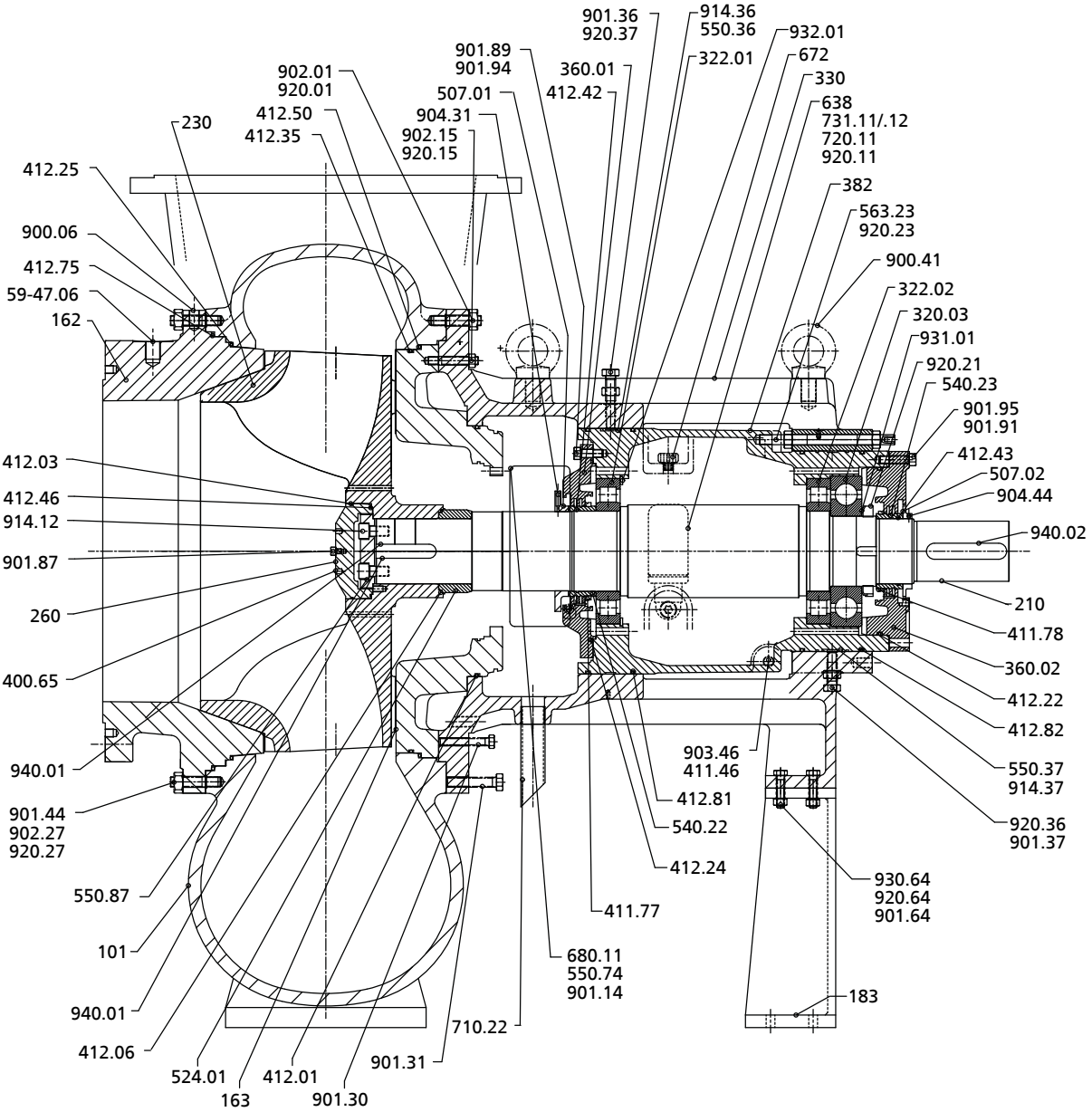


**Fig. 15:** General assembly drawing of pump with bearing bracket P16ax V10

**Table 18:** List of components

| Part No. | Description | Part No. | Description |
|---|---|---|---|
| 101 | Pump casing | 563.23 | Bolt/stud |
| 162 | Suction cover | 59-47.06 | Lifting lug |
| 163 | Discharge cover | 638 | Constant level oiler |
| 183 | Support foot | 672 | Vent |
| 210 | Shaft | 680.11 | Guard |
| 230 | Impeller | 710.22 | Pipe |
| 260 | Impeller hub cap | 720.11 | Fitting |
| 320.03 | Rolling element bearing | 731.11/.12 | Pipe union |
| 322.01/.02 | Radial roller bearing | 900.06/.41 | Screw |
| 330 | Bearing bracket | 901.14/.30/.31/.36/.37/.44/.64 /.87/.89/.91/.94/.95 | Hexagon head bolt |
| 360.01/.02 | Bearing cover | 902.01/.15/.27 | Stud |
| 382 | Bearing carrier | 903.46 | Screw plug |
| 400.65 | Gasket | 904.31/.44 | Grub screw |
| 411.46/.77/.78 | Joint ring | 914.12/.36/.37 | Hexagon socket head cap screw |

| Part No. | Description | Part No. | Description |
|---|---|---|---|
| 412.01/.03/.06/.22/.24/.25/.35/.42/.43/.46/.50/.75/.81/.82 | O-ring | 920.01/.11/.15/.21/.23/.27/.36/.37/.64 | Nut |
| 507.01/.02 | Thrower | 930.64 | Safety device |
| 524.01 | Shaft protecting sleeve | 931.01 | Lock washer |
| 540.22/.23 | Bush | 932.01 | Circlip |
| 550.36/.37/.74/.87 | Disc | 940.01/.02 | Key |

**Pumps with bearing bracket P16ax V10 (sizes 500-400-0710, 500-400-0713, 500-500-0633, 500-500-0637)**

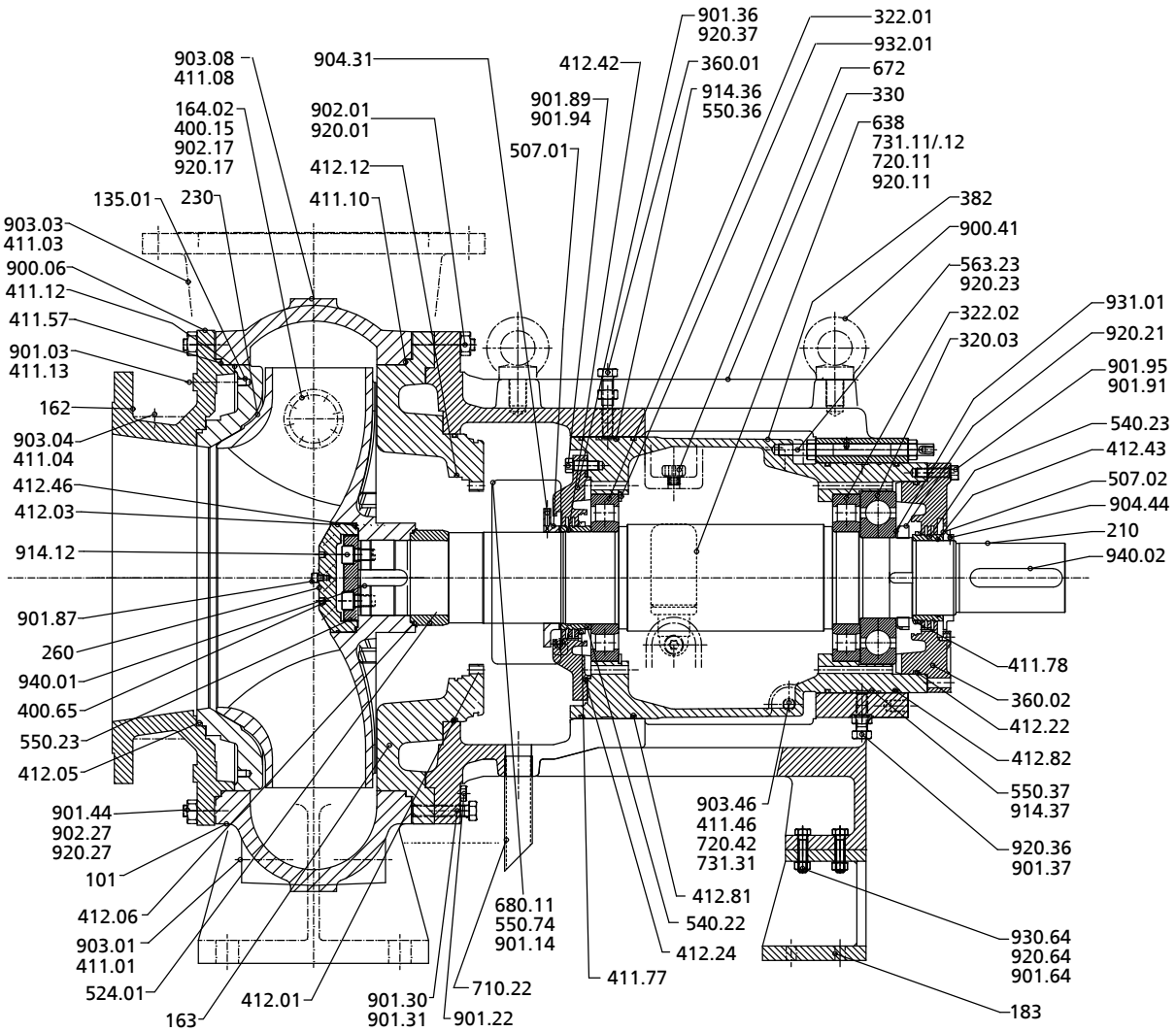


**Fig. 16:** General assembly drawing of pump with bearing bracket P16ax V10 (sizes 500-400-0710, 500-400-0713, 500-500-0633, 500-500-0637)

**Table 19:** List of components

| Part No. | Description | Part No. | Description |
|---|---|---|---|
| 101 | Pump casing | 550.23/.36/.37/.74 | Disc |
| 135.01 | Wear plate | 563.23 | Pin |
| 162 | Suction cover | 638 | Constant level oiler |
| 163 | Discharge cover | 672 | Vent |
| 164.02 | Inspection cover | 680.11 | Guard |
| 183 | Support foot | 710.22 | Pipe |
| 210 | Shaft | 720.11/.42 | Special pipe part |
| 230 | Impeller | 731.11/.12/.31 | Pipe union |
| 260 | Impeller hub cap | 900.06/.41 | Bolt |
| 320.03 | Rolling element bearings | 901.03/.14/.22/.30/.31/.36/.37 /.44/.64/.87/.89/.91/.94/.95 | Hexagon head bolt |
| 322.01/.02 | Radial roller bearing | 902.01/.17/.27 | Stud |
| 330 | Bearing bracket | 903.01/.03/.04/.08/.46 | Screw plug |
| 360.01/.02 | Bearing cover | 904.31/.44 | Grub screw |
| 382 | Bearing carrier | 914.12/.36/.37 | Hexagon socket head cap screw |
| 400.15/.65 | Gasket | 920.01/.11/.17/.21/.23/.27/.36 /.37/.64 | Nut |
| 411.01/.03/.04/.08/.10/.12/.46 /.57/.77/.78 | Seal ring | 930.64 | Safety device |
| 412.01/.03/.05/.06/.12/.22/.24 /.42/.43/.46/.81/.82 | O-ring | 931.01 | Lock washer |

| Part No. | Description | Part No. | Description |
|---|---|---|---|
| 507.01/.02 | Thrower | 932.01 | Circlip |
| 524.01 | Shaft protecting sleeve | 940.01/.02 | Key |
| 540.22/.23 | Bush | | |

## Pump with bearing bracket P20sx V10

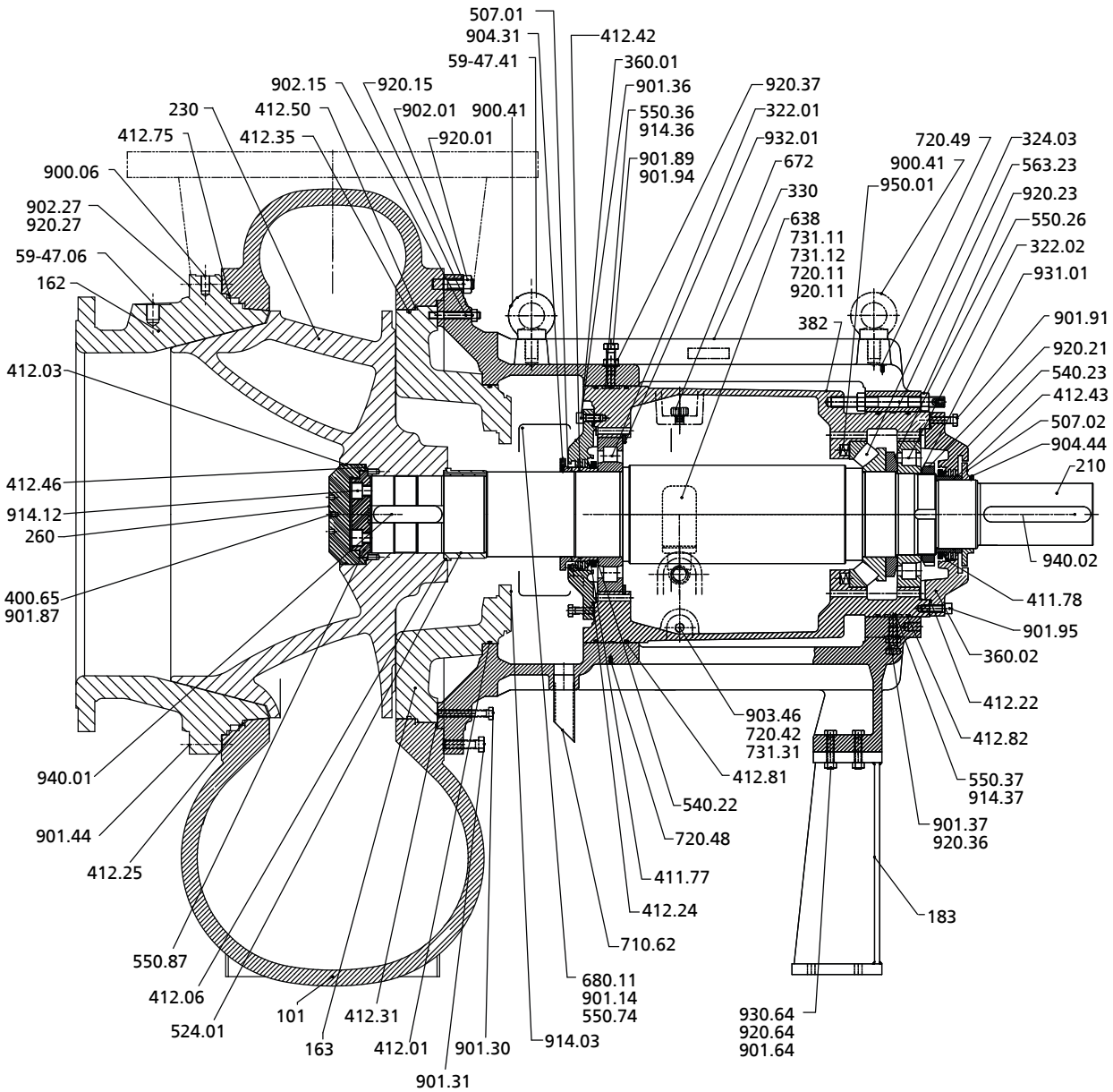


**Fig. 17:** General assembly drawing of pump with bearing bracket P20sx V10

**Table 20:** List of components

| Part No. | Description | Part No. | Description |
|---|---|---|---|
| 101 | Pump casing | 59-47.06/.41 | Lifting lug |
| 162 | Suction cover | 638 | Constant level oiler |
| 163 | Discharge cover | 672 | Vent |
| 183 | Support foot | 680.11 | Guard |
| 210 | Shaft | 710.62 | Pipe |
| 230 | Impeller | 720.11/.42/.48/.49 | Fitting |
| 260 | Impeller hub cap | 731.11/.12/.31 | Pipe union |
| 322.01/.02 | Radial roller bearing | 900.06/.41 | Screw |
| 324.03 | Thrust roller bearing | 901.14/.30/.31/.36/.37/.44/.64 /.87/.89/.91/.94/.95 | Hexagon head bolt |
| 330 | Bearing bracket | 902.01/.15/.27 | Stud |
| 360.01/.02 | Bearing cover | 903.46 | Screw plug |
| 382 | Bearing carrier | 904.31/.44 | Grub screw |
| 400.65 | Gasket | 914.03/.12/.36/.37 | Hexagon socket head cap screw |
| 411.77/.87 | Joint ring | 920.01/.11/.15/.21/.23/.27/.36 /.37/.64 | Nut |

| Part No. | Description | Part No. | Description |
|---|---|---|---|
| 412.01/.03/.06/.22/.24/.25/.31/.35/.42/.43/.46/.50/.75/.81/.82 | O-ring | 930.64 | Safety device |
| 507.01/.02 | Thrower | 931.01 | Lock washer |
| 524.01 | Shaft protecting sleeve | 932.01 | Circlip |
| 540.22/.23 | Bush | 940.01/.02 | Key |
| 550.26/.36/.37/.74/.87 | Disc | 950.01 | Spring |
| 563.23 | Bolt/stud | | |

## Pump with bearing bracket P20sx V11

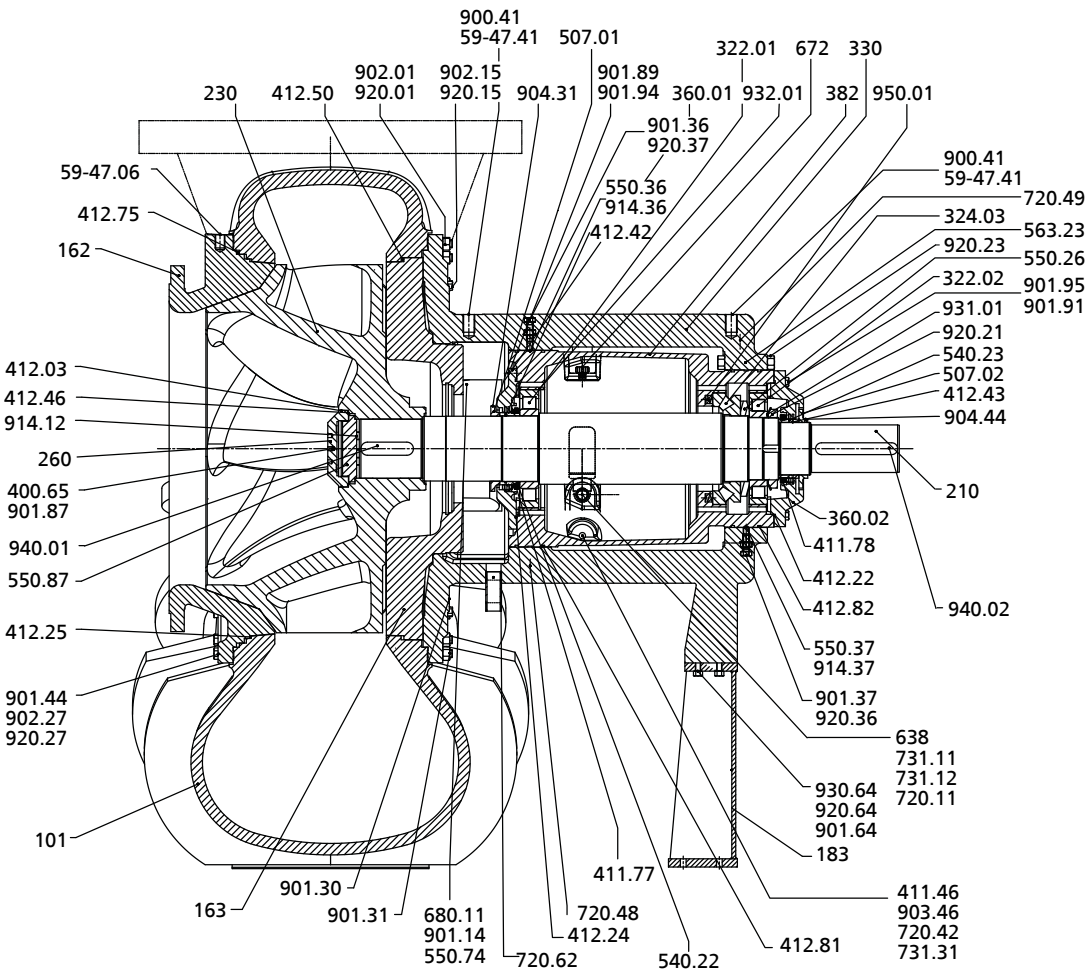


**Fig. 18:** General assembly drawing of pump with bearing bracket P20sx V11

**Table 21:** List of components

| Part No. | Description | Part No. | Description |
|---|---|---|---|
| 101 | Pump casing | 59-47.06/.41 | Lifting lug |
| 162 | Suction cover | 638 | Constant level oiler |
| 163 | Discharge cover | 672 | Vent |
| 183 | Support foot | 680.11 | Guard |
| 210 | Shaft | 720.11/.42/.48/.49/.62 | Special pipe part |
| 230 | Impeller | 731.11/.12/.31 | Pipe union |
| 260 | Impeller hub cap | 900.41 | Bolt |
| 322.01/.02 | Radial roller bearing | 901.14/.30./31/.36/.37/.44/.64 /.87/.89/.91/.94/.95 | Hexagon head bolt |
| 324.03 | Thrust roller bearing | 902.01/.15/.27 | Stud |
| 330 | Bearing bracket | 903.46 | Screw plug |
| 360.01/.02 | Bearing cover | 904.31/.44 | Grub screw |
| 382 | Bearing carrier | 914.12/.36/.37 | Hexagon socket head cap screw |
| 400.65 | Gasket | 920.01/.15/.21/.23/.27/.36/.37 /.64 | Nut |
| 411.46/.77/.78 | Seal ring | 930.64 | Safety device |
| 412.03/.22/.24/.25/.42/.43/.46 /.50/.75/.81/.82 | O-ring | 931.01 | Lock washer |
| 507.01/.02 | Thrower | 932.01 | Circlip |
| 540.22/.23 | Bush | 940.01/.02 | Key |
| 550.26/.36/.37/.74/.87 | Disc | 950.01 | Spring |
| 563.23 | Pin | | |

## Shaft seals

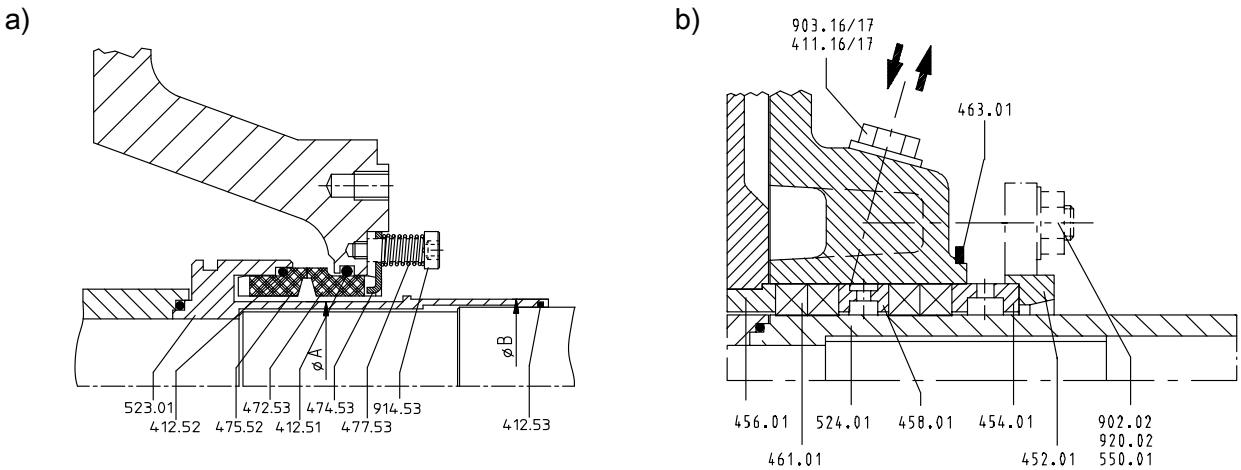


**Fig. 19:** Shaft seals P03ax to P12sx:
a) 4K mechanical seal
b) Coolable gland packing

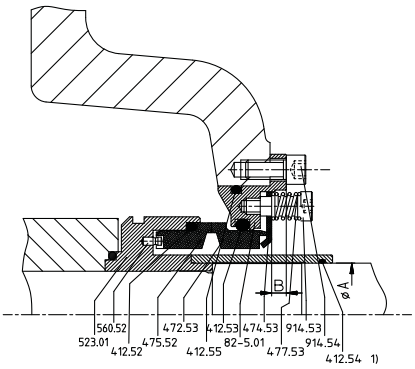


**Fig. 20:** 4K-120M mechanical seal[28)]

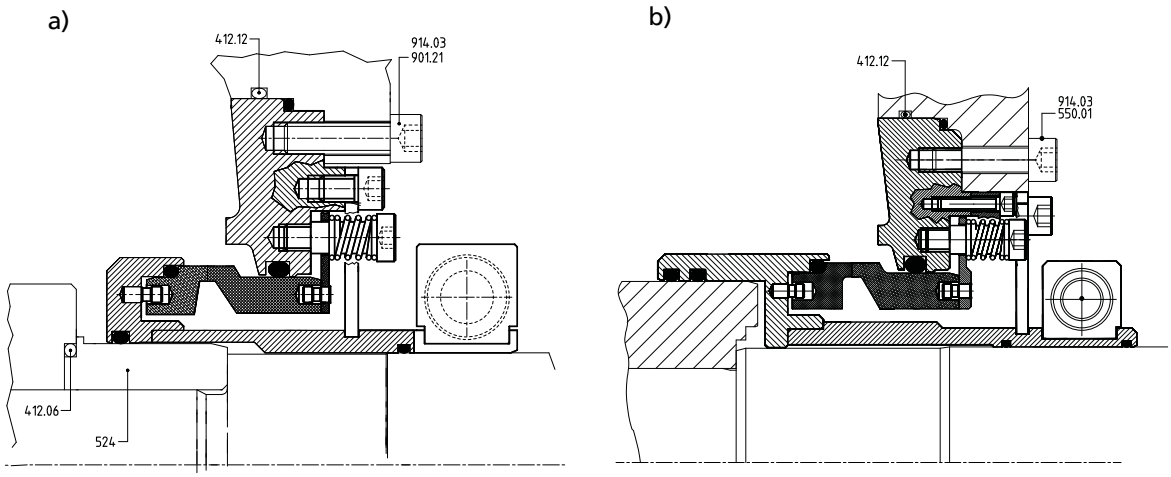


**Fig. 21:** Mechanical seal
a) P16ax/P20sx: mechanical seal 4K-160/-200 (for V10)
b) P20sx: mechanical seal 4K-253 (for V11)

**Table 22:** List of components

| Part No. | Description | Part No. | Description |
|---|---|---|---|
| 82-5.01 | Adapter | 475.52 | Mating ring |
| 411.16/.17 | Seal ring | 477.53 | Spring |
| 412.06/.12/.51/.52/.53/.54/.55 | O-ring | 523.01 | Shaft sleeve |

28 Only for sizes 600-600-0663 and 600-600-0669

| Part No. | Description | Part No. | Description |
|---|---|---|---|
| 452.01 | Gland follower | 524.01 | Shaft protecting sleeve |
| 454.01 | Stuffing box ring, split | 550.01 | Disc |
| 456.01 | Neck bush | 560.52 | Pin |
| 458.01 | Lantern ring, split | 901.21 | Hexagon head bolt |
| 461.01 | Packing ring | 902.02 | Stud |
| 463.01 | Drip plate | 903.16/.17 | Screw plug |
| 472.53 | Primary ring | 914.03/.53/.54 | Hexagon socket head cap screw |
| 474.53 | Thrust ring | 920.02 | Hexagon nut |

2361.5/12-EN

2024-01-25

2361.5/12-EN

LENNTECH
WATER TREATMENT SOLUTIONS
info@lenntech.com Tel. +31-152-610-900
www.lenntech.com Fax. +31-152-616-289