Dry-installed Volute Casing Pump

KWP-Bloc

Type Series Booklet

Legal information/Copyright

Type Series Booklet KWP-Bloc

All rights reserved. The contents provided herein must neither be distributed, copied, reproduced, edited or processed for any other purpose, nor otherwise transmitted, published or made available to a third party without the manufacturer's express written consent.

Subject to technical modification without prior notice.

© KSB SE & Co. KGaA, Frankenthal 27/04/2020

Contents

Centrifugal Pumps with Shaft Seal **4**
Dry-installed Volute Casing Pumps 4
KWP-Bloc 4
Main applications 4
Fluids handled 4
Operating data 4
Designation 4
Design details 4
Materials 5
Coating and preservation 5
Product benefits 5
Certifications 5
Acceptance tests and warranty 5
Selection information 5
Overview of product features / selection tables 5
Pressure limits and temperature limits 7
Technical data 8
Selection charts 9
Dimensions and connections 15
Accessories 18
General assembly drawing with list of components 20
Detailed designation 24

Centrifugal Pumps with Shaft Seal

Dry-installed Volute Casing Pumps

KWP-Bloc

Main applications

- Waste water management
- Process engineering
- General industry
- Plant engineering

Fluids handled

- Contaminated fluids
- Fluids containing solids
- Pre-treated waste water
- Industrial and municipal waste water
- All types of slurries without stringy material

Operating data

Operating properties

Characteristic		Value
Flow rate	Q [m³/h]	≤ 325
	Q [l/s]	≤ 90
Head	H [m]	≤ 100
Operating temperature	T [°C]	GNNG: -10 to +100
		GDNG: -10 to +100
		DDDD: -20 to +100
Operating pressure	p [bar]	≤ 10
Density	ρ [kg/dm³]	≤ 1.1

Designation

Example: KWP K 125-100-0250 GDNG 10

Designation key

Code	Description	
KWP	Type series	
K	Impeller type	
	K	Channel impeller
	O	Open multi-channel impeller[1)]
	F	Free-flow impeller
125	Nominal suction nozzle diameter [mm]	
100	Nominal discharge nozzle diameter [mm]	
0250	Nominal impeller diameter [mm]	
G	Casing material (⇨ Page 5)	
D	Impeller material (⇨ Page 5)	
N	Wear plate material (⇨ Page 5)	
G	Discharge cover material (⇨ Page 5)	
10	Design version	

Further information on the designation

(⇨ Page 24)

Design details

Design

- Volute casing pump
- Radially split volute casing
- Close-coupled design
- Pump casing fitted with a wear plate
- Single-stage
- Single-entry

Installation types

- Horizontal installation
- Vertical installation

Shaft seal

- Uncooled mechanical seal with/without oil reservoir[2)]

Impeller type

- Various application-oriented impeller types (⇨ Page 6)

Bearings

- Grease-packed deep groove ball bearings

Automation

Automation options:

- PumpDrive
- PumpMeter

2362.5/09-EN

1) Available on request only
2) Pump sets for vertical installation are fitted with an oil reservoir. For horizontal installation, an oil reservoir can be fitted as an option.

Connections

- Suction flange with blind holes to DIN 2501, PN 10/16 with tapped blind holes of 1,25 d for hexagon head bolts
- Discharge flange with clearance holes to EN 1092-2, PN 16/21/B

Materials

Materials depending on material variant

Part No.	Description	Material variant		
		DDDD	GDNG	GNNG
101	Pump casing	Noridur 1.4593	EN-GJL-250	EN-GJL-250
135.01	Wear plate, suction side	Noridur 1.4593	ERN	ERN
146	Intermediate lantern	EN-GJL-250	EN-GJL-250	EN-GJL-250
163	Discharge cover	Noridur 1.4593	EN-GJL-250	EN-GJL-250
210	Shaft	1.4462	1.4021+QT700	1.4021+QT700
230	Impeller	Noridur 1.4593	Noridur 1.4593	ERN
509	Intermediate ring	EN-GJL-250	-	-
524.01	Shaft protecting sleeve	1.4539	1.4539	1.4539
906	Impeller screw	1.4539	C35E+N	C35E+N

Coating and preservation

- Coating and preservation to KSB standard

Product benefits

- Easy to dismantle due to back pull-out design; no need to remove the pump casing from the piping
- High operating reliability by mechanical seal in casing cover with conical seal chamber for enhanced circulation and self-venting
- Long service life through wear-resistant diagonal clearance and impeller with front vanes
- Back vanes for axial thrust balancing and shaft seal balancing
- Oil level gauge and overflow
- High operating reliability with all pressure-retaining components made of quality casting and corrosion/wear allowance
- Fixed bearing prevents axial loads on the motor bearing.
- Maintenance-free bearings grease-packed for life

Certifications

Overview

Label	Effective in:	Note
International Organization for Standardization ISO 9001	All countries	Certified quality management to ISO 9001

Acceptance tests and warranty

- Materials testing
  - Test report 2.2 on request
- Final inspection
  - Inspection certificate 3.1 to EN 10204 on request
- Hydraulic test

  The operating point of each pump is guaranteed to ISO 9906/3B.

  The following acceptance tests can be performed and certified at extra charge:
  - Performance test to ISO 9906
  - NPSH test
- Other inspections/tests on request
- Warranty

  Warranties are given within the scope of the valid terms and conditions of sale and delivery.

Selection information

Oil supply

The pump is, as a rule, operated without an oil supply. If an oil supply is required (possible reasons: temporary negative pressure on suction side, toxicity of fluid handled, etc.), this must be specified.

Overview of product features / selection tables

Programme overview

Impeller types and material variants per pump size

Size	KWP K			KWP O		KWP F		
	DDDD	GDNG	GNNG	DDDD	GDNG	DDDD	GDNG	GNNG
065-040-0250	✗	✗	✗	-	-	-	-	-
065-050-0200	✗	✗	✗	✗	✗	-	-	-
065-050-0201	-	-	-	-	-	✗	✗	✗
080-040-0315	✗	✗	✗	-	-	-	-	-

Size	KWP K			KWP O		KWP F		
	DDDD	GDNG	GNNG	DDDD	GDNG	DDDD	GDNG	GNNG
080-065-0200	✗	✗	✗	✗	✗	-	-	-
080-065-0201	-	-	-	-	-	✗	✗	✗
080-065-0313	✗	✗	✗	-	-	-	-	-
080-065-0315	✗	✗	✗	✗	✗	-	-	-
100-080-0250	✗	✗	✗	✗	✗	-	-	-
100-080-0251	-	-	-	-	-	✗	✗	✗
100-080-0311	-	-	-	-	-	✗	✗	✗
100-080-0315	✗	✗	✗	-	-	-	-	-
125-100-0250	✗	✗	✗	✗	✗	-	-	-
125-100-0251	-	-	-	-	-	✗	✗	✗
125-100-0253	✗	✗	✗	-	-	-	-	-
125-100-0315	✗	✗	✗	-	-	-	-	-

Impellers

	Closed multi-channel impeller (impeller type K)	**Suitable for the following fluids** contaminated, solids-laden, non-gaseous fluids without stringy material

	Open multi-vane impeller (impeller type O)	**Suitable for the following fluids** uncontaminated or slightly contaminated fluids with little entrapped gas as well as fluids liable to form deposits and bunch

	Free-flow impeller (impeller type F)	**Suitable for the following fluids** fluids containing solids and stringy material as well as fluids with entrapped air or entrapped gas

Pump/motor combinations

Motor rating and number of motor poles depending on the pump size[3)]

Size	Motor rating [kW]																																
	1,1			1,5			2,2			3,0			4,0			5,5			7,5			11,0			15,0			19,0			22,0		
	Number of motor poles																																
	2	4	6	2	4	6	2	4	6	2	4	6	2	4	6	2	4	6	2	4	6	2	4	6	2	4	6	2	4	6	2	4	6
	Motor																																
	-	90S	90L	90S	90L	100L	90L	100L	112L	100L	100L	132S	112M	112M	132M	132S	132S	132M	132S	132M	160M	160M	160M	160L	160M	160L	180L	160L	180M	200L	180M	180L	200L
065-040-0250	-	✗	✗	-	✗	✗	-	✗	-	-	✗	-	✗	✗	-	✗	✗	-	✗	-	-	✗	-	-	✗	-	-	✗	-	-	✗	-	-
065-050-0200	-	-	✗	-	-	✗	-	-	✗	-	-	✗	-	✗	✗	-	✗	✗	-	✗	✗	-	✗	-	-	✗	-	-	✗	-	-	-	-
065-050-0201	-	✗	✗	-	✗	✗	-	✗	-	✗	✗	-	✗	✗	-	✗	-	-	✗	-	-	✗	-	-	✗	-	-	✗	-	-	✗	-	-
080-040-0315	-	✗	✗	-	✗	✗	-	✗	-	✗	✗	-	✗	✗	-	✗	-	-	✗	-	-	✗	-	-	✗	-	-	✗	-	-	✗	-	-
080-065-0200	-	✗	✗	-	✗	✗	-	✗	✗	-	✗	-	-	✗	-	✗	✗	-	✗	-	-	✗	-	-	✗	-	-	✗	-	-	✗	-	-
080-065-0201	-	✗	✗	-	✗	✗	-	✗	✗	-	✗	-	-	✗	-	✗	✗	-	✗	-	-	✗	-	-	✗	-	-	✗	-	-	✗	-	-
080-065-0313	-	-	✗	-	-	✗	-	-	✗	-	-	✗	-	✗	✗	-	✗	✗	-	✗	✗	-	✗	-	-	✗	-	-	✗	-	-	-	-
080-065-0315	-	-	✗	-	-	✗	-	-	✗	-	-	✗	-	✗	✗	-	✗	✗	-	✗	✗	-	✗	-	-	✗	-	-	✗	-	-	-	-
100-080-0250	-	-	✗	-	✗	✗	-	✗	✗	-	✗	✗	-	✗	✗	-	✗	-	-	✗	-	✗	✗	-	✗	-	-	✗	-	-	✗	-	-
100-080-0251	-	-	✗	-	✗	✗	-	✗	✗	-	✗	✗	-	✗	✗	-	✗	-	-	✗	-	✗	✗	-	✗	-	-	✗	-	-	✗	-	-
100-080-0311	-	-	-	-	-	✗	-	-	✗	-	-	✗	-	✗	✗	-	✗	✗	-	✗	✗	-	✗	-	-	✗	-	-	✗	-	-	✗	-
100-080-0315	-	-	-	-	-	✗	-	-	✗	-	-	✗	-	✗	✗	-	✗	✗	-	✗	✗	-	✗	-	-	✗	-	-	✗	-	-	✗	-
125-100-0250	-	-	✗	-	✗	✗	-	✗	✗	-	✗	✗	-	✗	✗	-	✗	-	-	✗	-	✗	✗	-	✗	✗	-	✗	-	-	✗	-	-

3) Electric motors (< 5.5 kW: type of construction V1; ≥ 5.5 kW: type of construction V15) are used as standard.

2362.5/09-EN

Size	Motor rating [kW]																																
	1,1			1,5			2,2			3,0			4,0			5,5			7,5			11,0			15,0			19,0			22,0		
	Number of motor poles																																
	2	4	6	2	4	6	2	4	6	2	4	6	2	4	6	2	4	6	2	4	6	2	4	6	2	4	6	2	4	6	2	4	6
	Motor																																
	-	90S	90L	90S	90L	100L	90L	100L	112L	100L	100L	132S	112M	112M	132M	132S	132S	132M	132S	132M	160M	160M	160M	160L	160M	160L	180L	160L	180M	200L	180M	180L	200L
125-100-0251	-	-	✗	-	✗	✗	-	✗	✗	-	✗	✗	-	✗	✗	-	✗	-	-	✗	-	✗	✗	-	✗	✗	-	✗	-	-	✗	-	-
125-100-0253	-	-	✗	-	✗	✗	-	✗	✗	-	✗	✗	-	✗	✗	-	✗	-	-	✗	-	✗	✗	-	✗	✗	-	✗	-	-	✗	-	-
125-100-0315	-	-	-	-	-	✗	-	-	✗	-	-	✗	-	✗	✗	-	✗	✗	-	✗	✗	-	✗	-	-	✗	-	-	✗	-	-	✗	-

Bearings

Grease-packed deep groove ball bearing

Motor	Deep groove ball bearing (to DIN 625)
90S, 90L, 100L, 112M	6012 C3 2RS
132S, 132M, 160M, 160L, 180M, 180L	6312 C3 2RS

Shaft seal

Overview of mechanical seals

Design[4)]	Make	Type	Material combination to EN 12756
Single mechanical seal, balanced	KSB	4 KBL	$U_1U_1VGG_1$
			$Q_1Q_1VGG_1$
Single mechanical seal, unbalanced	Burgmann[5)]	MG1 - G6	Q_1Q_1VGG
			Q_1Q_1EGG
	John Crane	2100	Q_5Q_5VGG
			Q_5Q_5EGG

Pressure limits and temperature limits

Pressure limits and temperature limits of the pump

Material variant	Fluid temperature	Operating pressure	Test pressure
	[°C]	[bar]	[bar]
DDDD	-20 to +100	≤ 10	15
GDNG	-10 to +100	≤ 10	15
GNNG	-10 to +100	≤ 10	15

4) Only single mechanical seals are fitted in the conical discharge chamber.
5) Other mechanical seals to EN 12756 (DIN 24960), version I1k can be fitted

Technical data

Technical data

Size	Impeller diameter						Free passage			Shaft diameter				Weight[6]	
	KWP K		KWP O		KWP F										
	Min.	Max.	Min.	Max.	Min.	Max.	KWP K	KWP O	KWP F	Impeller	Shaft protecting sleeve 4KBL	Shaft protecting sleeve standardised mechanical seal	Bearing	Motor 90S, 90L, 100L, 112M	Motor 132S, 132M 160M, 160L, 180M, 180L
	[mm]	[mm]	[mm]	[mm]	[mm]	[mm]	[mm]	[mm]	[mm]	[mm]	[mm]	[mm]	[mm]	[kg]	[kg]
065-040-0250	170	260	-	-	-	-	15	-	-	27	31	43	60	75	85
065-050-0200	120	209	160	209	-	-	34	-	-	30	38	43	60	70	80
065-050-0201	-	-	-	-	130	209	-	-	45	-	31	43	60	70	80
080-040-0315	230	320	-	-	-	-	15	-	-	27	31	43	60	115	125
080-065-0200	145	209	160	209	-	-	46	30	-	27	31	43	60	75	85
080-065-0201	-	-	-	-	145	209	-	-	55	27	31	43	60	75	85
080-065-0313	230	320	-	-	-	-	15	-	-	35	38	43	60	110	120
080-065-0315	230	320	230	320	-	-	42	25	-	35	38	43	60	110	120
100-080-0250	170	260	170	260	-	-	50	36	-	27	31	43	60	90	100
100-080-0251	-	-	-	-	170	260	-	-	60	27	31	43	60	90	100
100-080-0311	-	-	-	-	260	320	-	-	50	35	38	43	60	-	130
100-080-0315	260	320	-	-	-	-	44	-	-	35	38	43	60	-	130
125-100-0250	180	260	180	260	-	-	60	50	-	35	38	43	60	100	110
125-100-0251	-	-	-	-	180	260	-	-	50	35	38	43	60	100	110
125-100-0253	180	260	-	-	-	-	28	-	-	35	38	43	60	100	110
125-100-0315	230	320	-	-	-	-	54	-	-	35	38	43	60	125	135

6) The weights indicated refer to the pump without motor, mounting plate or foundation rails

2362.5/09-EN

Selection charts

KWP K, n = 2900 rpm

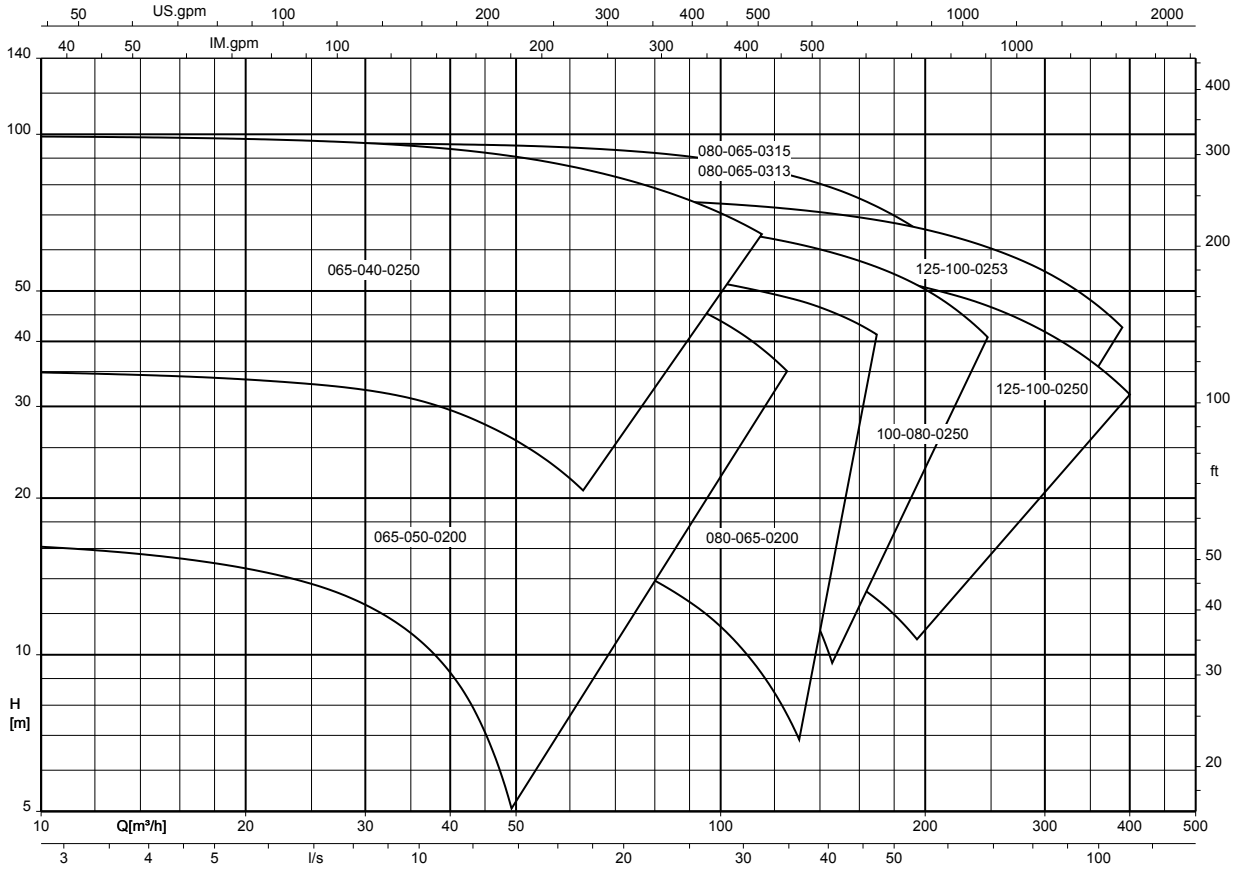

KWP K, n = 1450 rpm

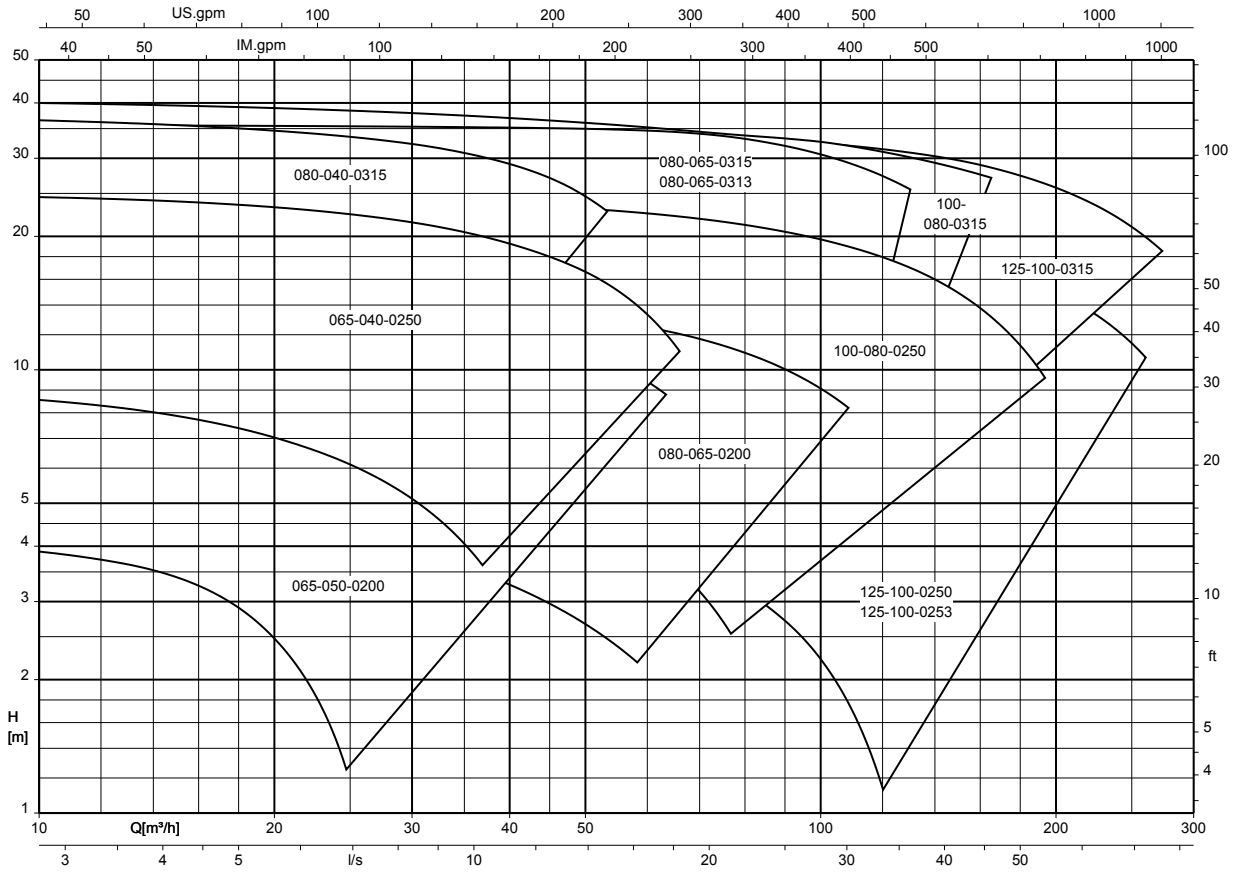

KWP K, n = 960 rpm

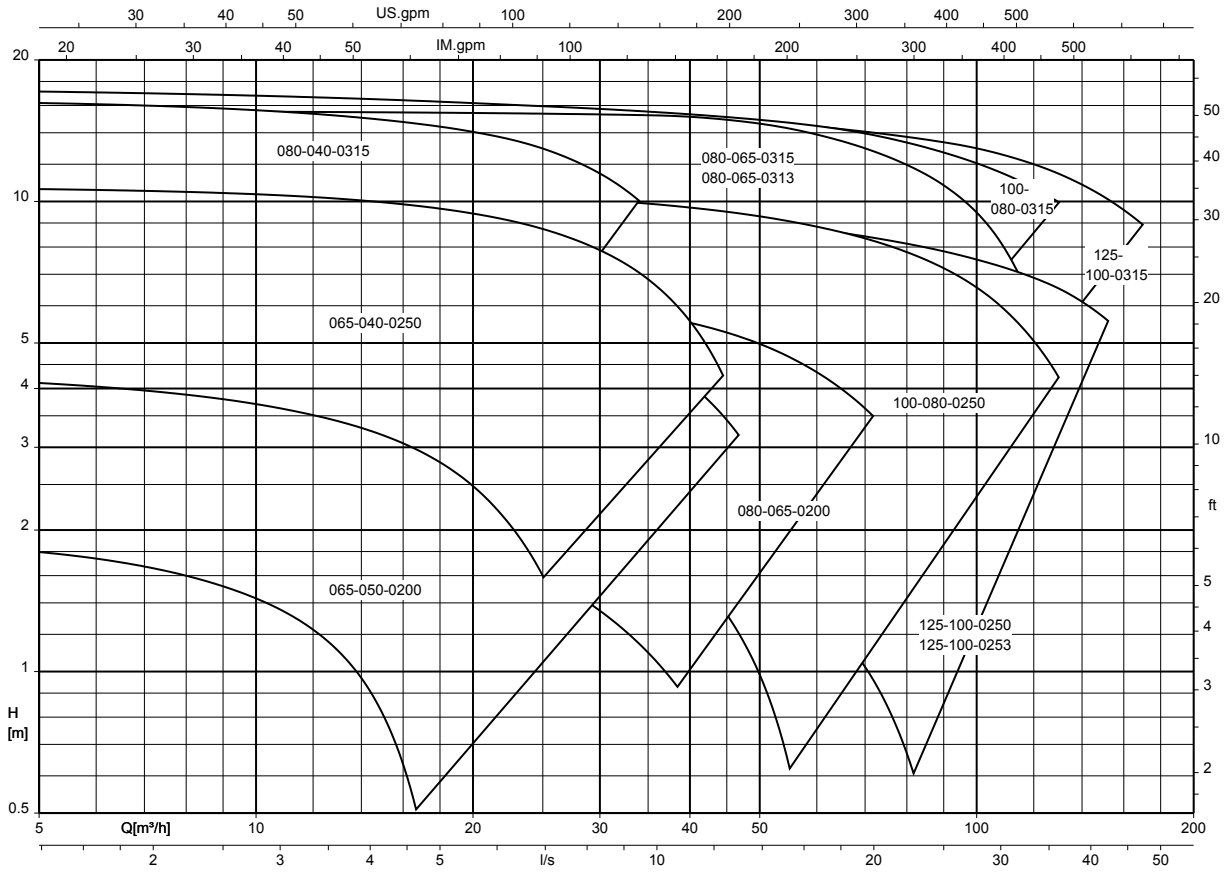

KWP F, n = 2900 rpm

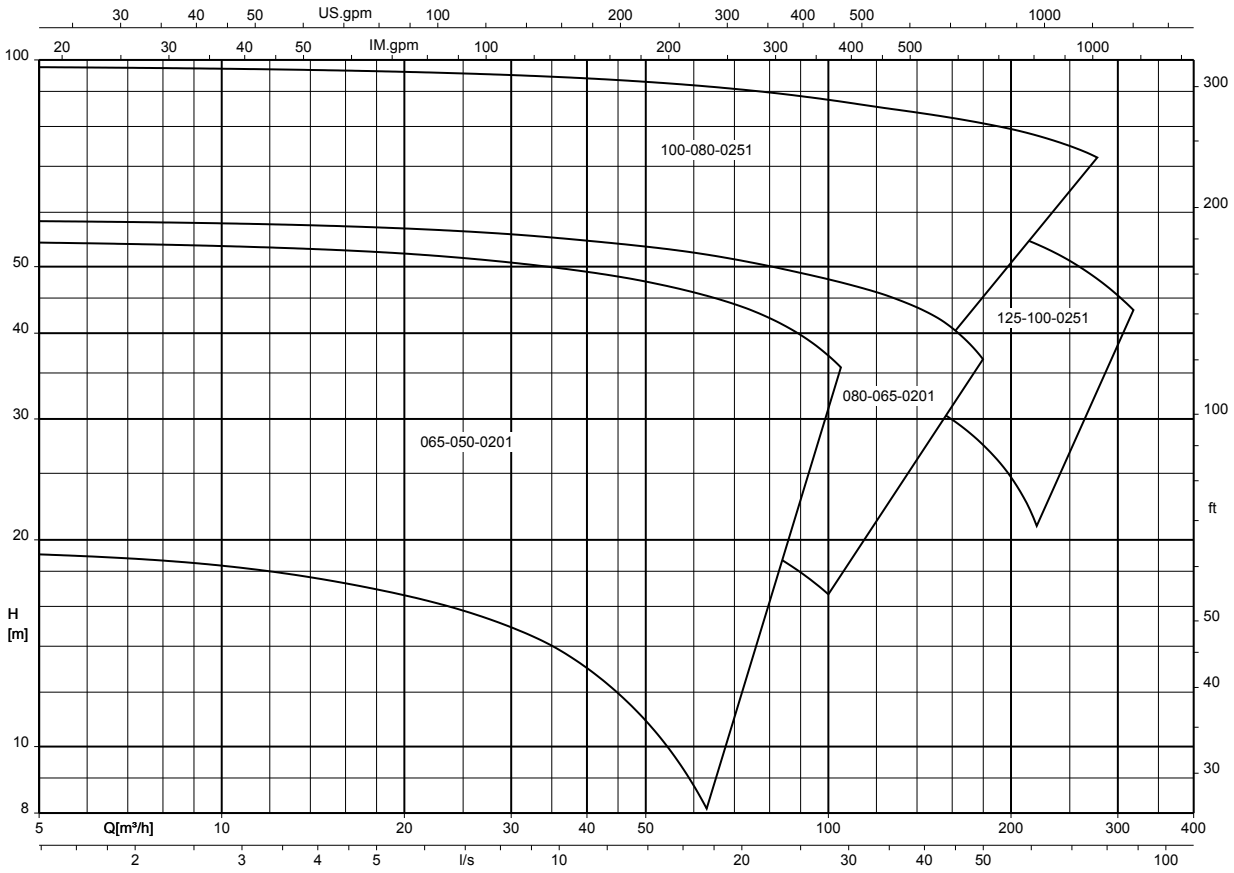

KWP F, n = 1450 rpm

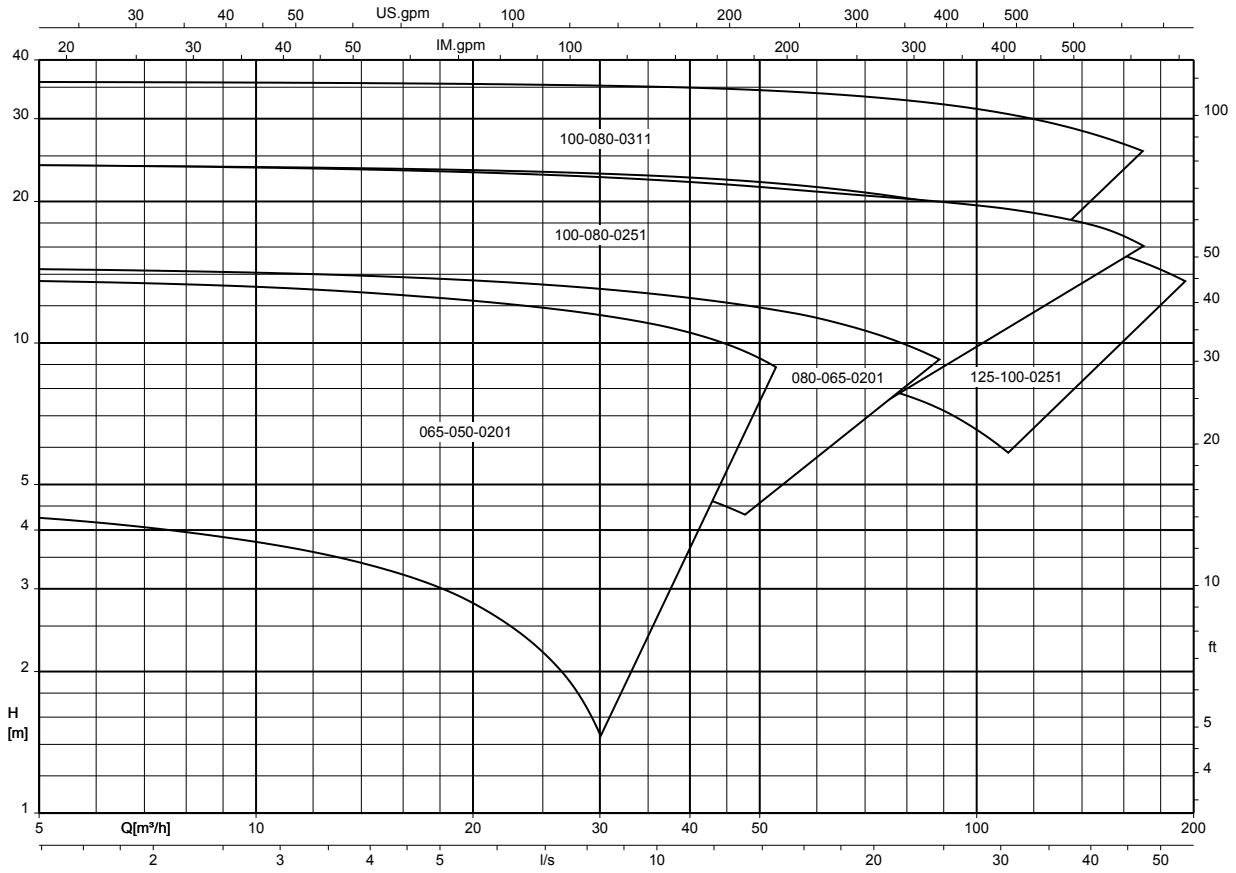

KWP F, n = 960 rpm

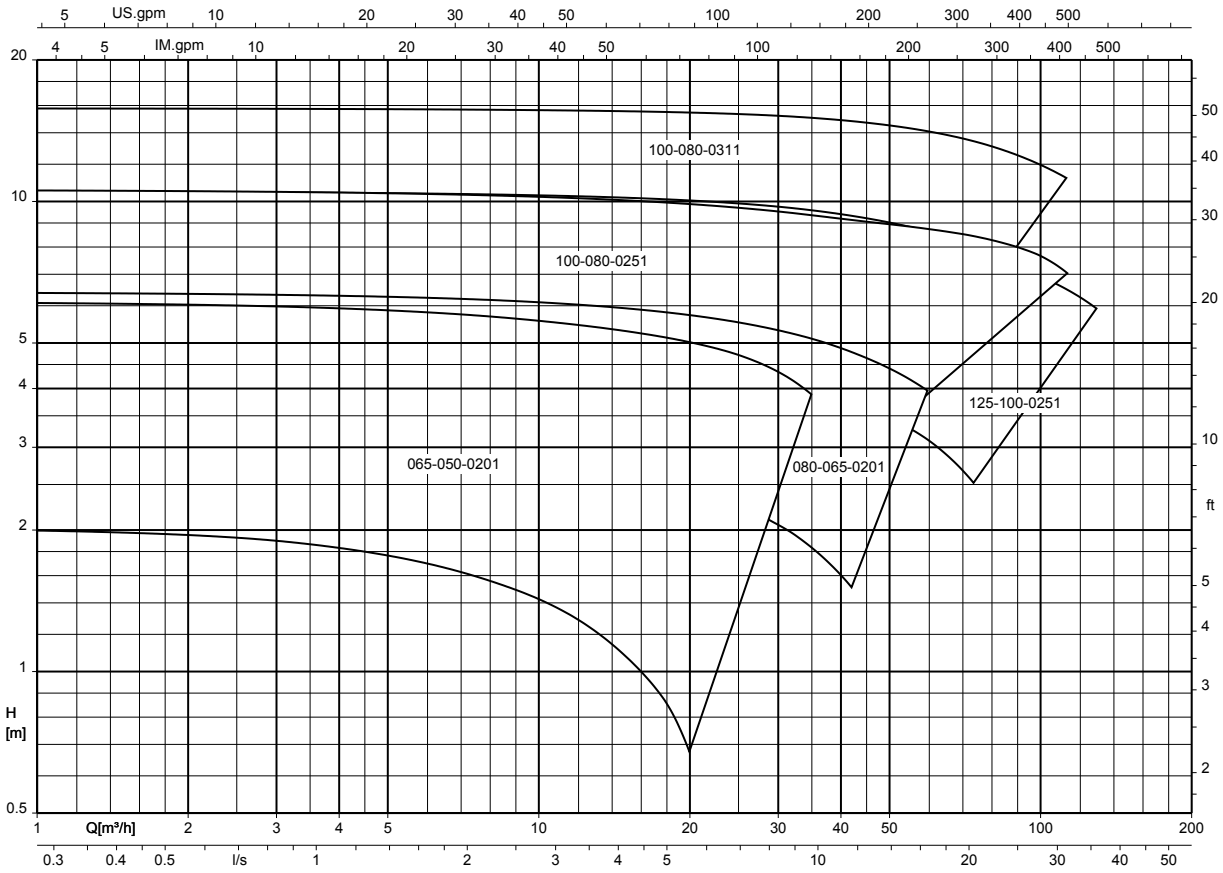

Dimensions and connections

Pump set dimensions

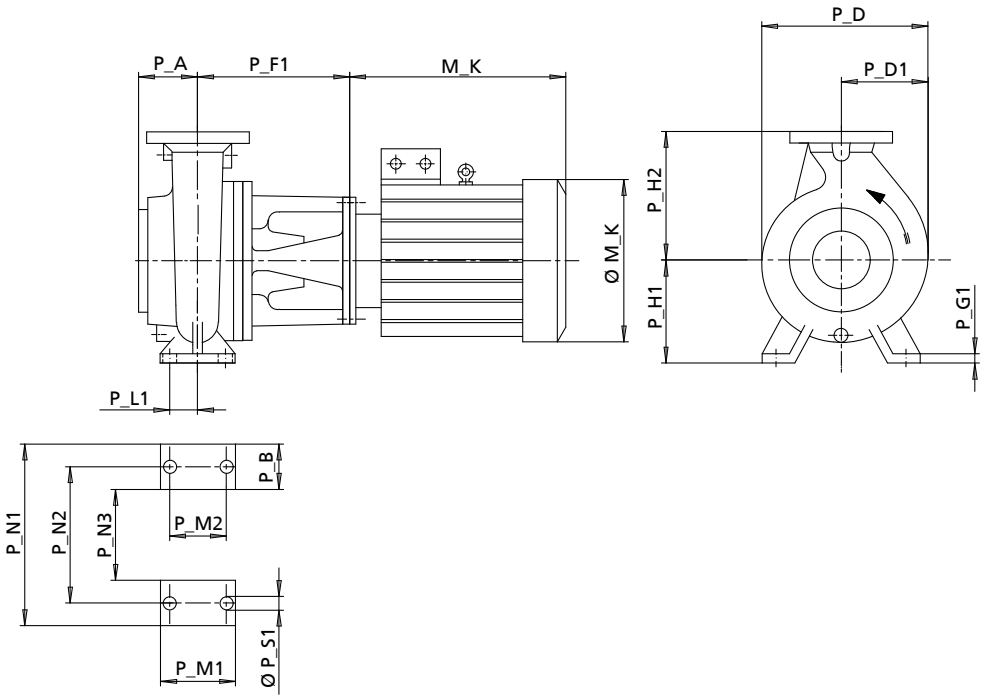

Fig. 1: Dimensions

Pump dimensions in [mm] depending on the pump size

Size	P_A	P_B	P_D	P_D1	P_G1	P_H1	P_H2	P_L1	P_M1	P_M2	P_N1	P_N2	P_N3	P_S1
065-040-0250[7)]	100	65	356	178	16	180	225	47,5	125	95	320	250	190	16
080-040-0315	125	80	402	204	18	225	250	60	160	120	400	315	1240	18
065-050-0200[7)]	112	50	270	138	14	160	200	35	100	70	265	212	165	17
065-050-0201[7)]	112	50	270	138	14	160	200	35	100	70	265	212	165	17
080-065-0200[7)]	125	65	291	152	16	180	225	47,5	125	95	320	250	190	17
080-065-0201[7)]	125	65	291	152	16	180	225	47,5	125	95	320	250	190	17
080-065-0313	140	80	388	193	18	225	280	60	160	120	400	315	240	21
080-065-0315	140	80	388	193	18	225	280	60	160	120	400	315	240	21
100-080-0250	125	80	352	183	18	225	280	60	160	120	400	315	240	21
100-080-0251	125	80	352	183	18	225	280	60	160	120	400	315	240	21
100-080-0311	140	80	411	206	18	225	280	60	160	120	400	315	240	21
100-080-0315	140	80	411	206	18	225	280	60	160	120	400	315	240	21
125-100-0250	140	80	379	199	18	225	280	60	160	120	400	315	240	21
125-100-0251	140	80	379	199	18	225	280	60	160	120	400	315	240	21
125-100-0253	140	80	379	199	18	225	280	60	160	120	400	315	240	21
125-100-0315	140	80	420	220	18	250	315	60	180	120	400	315	240	21

Dimensions [mm] of motors 90S, 90L, 100L, 112M, 132S depending on the pump size

Size	90S			90L			100L			112M			132S		
	P_F1	M_K	Ø M_K	P_F1	M_K	Ø M_K	P_F1	M_K	Ø M_K	P_F1	M_K	Ø M_K	P_F1	M_K	Ø M_K
065-040-0250	262	235	186	262	260	186	262	302	200	262	323	224	323	354	220
080-040-0315	-	-	-	-	-	-	274	302	200	274	323	224	335	354	220
065-050-0200	262	235	186	262	260	186	262	302	200	262	323	224	323	354	220
065-050-0201	262	235	186	262	260	186	262	302	200	262	323	224	323	354	220
080-065-0200	262	235	186	262	260	186	262	302	200	262	323	224	323	354	220
080-065-0201	262	235	186	262	260	186	262	302	200	262	323	224	323	354	220

7) For combinations with motor 132S, 132M, 160M, 160L, 180M or 180L foundation rails or mounting plates are required. For all other combinations they are optional.

Size	90S			90L			100L			112M			132S		
	P_F1	M_K	Ø M_K	P_F1	M_K	Ø M_K	P_F1	M_K	Ø M_K	P_F1	M_K	Ø M_K	P_F1	M_K	Ø M_K
080-065-0313	-	-	-	-	-	-	274	302	200	274	323	224	335	354	220
080-065-0315	-	-	-	-	-	-	274	302	200	274	323	224	335	354	220
100-080-0250	262	235	186	262	260	186	262	302	200	262	323	224	323	354	220
100-080-0251	262	235	186	262	260	186	262	302	200	262	323	224	323	354	220
100-080-0311	-	-	-	-	-	-	274	302	200	274	323	224	335	354	220
100-080-0315	-	-	-	-	-	-	274	302	200	274	323	224	335	354	220
125-100-0250	-	-	-	-	-	-	274	302	200	274	323	224	335	354	220
125-100-0251	-	-	-	-	-	-	274	302	200	274	323	224	335	354	220
125-100-0253	-	-	-	-	-	-	274	302	200	274	323	224	335	354	220
125-100-0315	-	-	-	-	-	-	274	302	200	274	323	224	335	354	220

Dimensions [mm] of motors 132M, 160M, 160L, 180M, 180L depending on the pump size

Size	132M			160M			160L			180M			180L		
	P_F1	M_K	Ø M_K	P_F1	M_K	Ø M_K	P_F1	M_K	Ø M_K	P_F1	M_K	Ø M_K	P_F1	M_K	Ø M_K
065-040-0250	323	411	260	323	446	260	323	527	330	323	533	330	-	-	-
080-040-0315	335	411	260	335	446	260	335	527	330	335	533	330	335	552	330
065-050-0200	323	411	260	323	446	260	323	527	330	323	533	330	-	-	-
065-050-0201	323	411	260	323	446	260	323	527	330	323	533	330	-	-	-
080-065-0200	323	411	260	323	446	260	323	527	330	323	533	330	-	-	-
080-065-0201	323	411	260	323	446	260	323	527	330	323	533	330	-	-	-
080-065-0313	335	411	260	335	446	260	335	527	330	335	533	330	335	552	330
080-065-0315	335	411	260	335	446	260	335	527	330	335	533	330	335	552	330
100-080-0250	323	411	260	323	446	260	323	527	330	323	533	330	-	-	-
100-080-0251	323	411	260	323	446	260	323	527	330	323	533	330	-	-	-
100-080-0311	335	411	260	335	446	260	335	527	330	335	533	330	335	552	330
100-080-0315	335	411	260	335	446	260	335	527	330	335	533	330	335	552	330
125-100-0250	335	411	260	335	446	260	335	527	330	335	533	330	335	552	330
125-100-0251	335	411	260	335	446	260	335	527	330	335	533	330	335	552	330
125-100-0253	335	411	260	335	446	260	335	527	330	335	533	330	335	552	330
125-100-0315	335	411	260	335	446	260	335	527	330	335	533	330	335	552	330

2362.5/09-EN

Connections

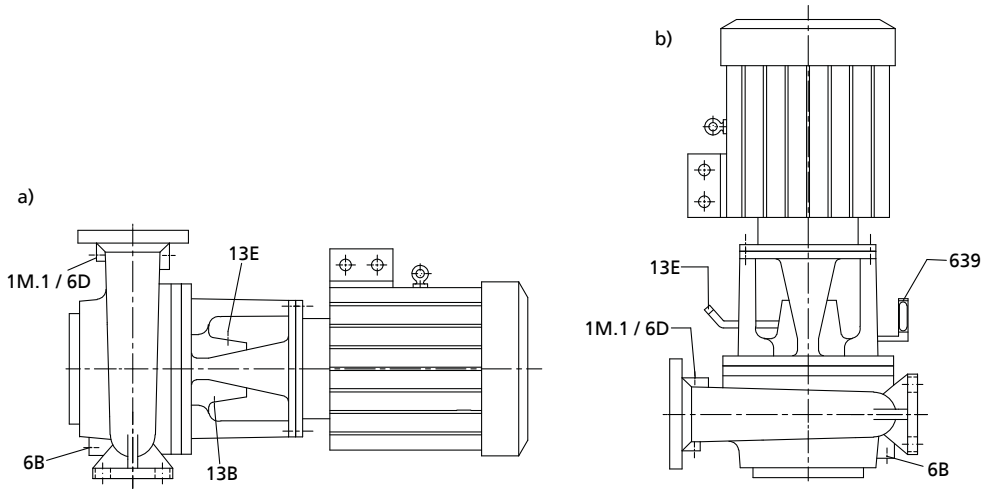

Fig. 2: Connections a) Horizontal installation b) Vertical installation

1M.1	Pressure gauge	13B	Oil drain / oil level gauge
6B	Casing drain	13D	Oil dip stick / vent
6D	Vent	639	Oil level gauge

Pump connections depending on the pump size

Size	1M.1	6B	6D	13B	13D	639
065-040-0250	G 1/2	G 3/4	G 1/2	G 1/4	G 1/2	G 1/4
065-050-0200	G 1/2	G 3/4	G 1/2	G 1/4	G 1/2	G 1/4
065-050-0201	G 1/2	G 3/4	G 1/2	G 1/4	G 1/2	G 1/4
080-040-0315	G 1/2	G 3/4	G 1/2	G 1/4	G 1/2	G 1/4
080-065-0200	G 1/2	G 3/4	G 1/2	G 1/4	G 1/2	G 1/4
080-065-0201	G 1/2	G 3/4	G 1/2	G 1/4	G 1/2	G 1/4
080-065-0313	G 1/2	G 3/4	G 1/2	G 1/4	G 1/2	G 1/4
080-065-0315	G 1/2	G 3/4	G 1/2	G 1/4	G 1/2	G 1/4
100-080-0250	G 1	G 3/4	G 1	G 1/4	G 1/2	G 1/4
100-080-0251	G 1	G 3/4	G 1	G 1/4	G 1/2	G 1/4
100-080-0311	G 1	G 3/4	G 1	G 1/4	G 1/2	G 1/4
100-080-0315	G 1	G 3/4	G 1	G 1/4	G 1/2	G 1/4
125-100-0250	G 1	G 1	G 1	G 1/4	G 1/2	G 1/4
125-100-0251	G 1	G 1	G 1	G 1/4	G 1/2	G 1/4
125-100-0253	G 1	G 1	G 1	G 1/4	G 1/2	G 1/4
125-100-0315	G 1	G 1	G 1	G 1/4	G 1/2	G 1/4

2362.5/09-EN

Accessories

Foundation rail

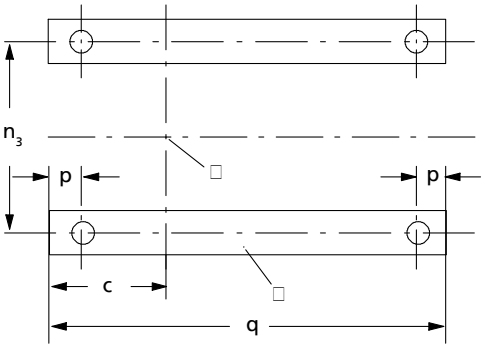

Fig. 3: Foundation rail dimensions

①	Pump centre
②	U80 DIN 1026, overall height 45 mm

Foundation rail[8)]

Size	Motor										c	n_3	p	q	[kg]
	90S	90L	100L	112M	132S	132M	160M	160L	180M	180L	[mm]	[mm]	[mm]	[mm]	
065-040-0250	✗	✗	✗	✗	-	-	-	-	-	-	163	250	50	550	10
	-	-	-	-	✗	✗	✗	✗	✗	✗	183	274	60	850	15
065-050-0200	✗	✗	✗	✗	-	-	-	-	-	-	150	212	50	550	10
	-	-	-	-	✗	✗	✗	✗	✗	✗	170	236	60	850	15
065-050-0201	✗	✗	✗	✗	-	-	-	-	-	-	150	212	50	550	10
	-	-	-	-	✗	✗	✗	✗	✗	✗	170	236	60	850	15
080-040-0315	✗	✗	✗	✗	-	-	-	-	-	-	200	315	50	550	10
	-	-	-	-	✗	✗	✗	✗	✗	✗	200	315	60	850	15
080-065-0200	✗	✗	✗	✗	-	-	-	-	-	-	163	250	50	550	10
	-	-	-	-	✗	✗	✗	✗	✗	✗	183	274	60	850	15
080-065-0201	✗	✗	✗	✗	-	-	-	-	-	-	163	250	50	550	10
	-	-	-	-	✗	✗	✗	✗	✗	✗	183	274	60	850	15
080-065-0313	✗	✗	✗	✗	-	-	-	-	-	-	200	315	50	550	10
	-	-	-	-	✗	✗	✗	✗	✗	✗	200	315	60	850	15
080-065-0315	✗	✗	✗	✗	-	-	-	-	-	-	200	315	50	550	10
	-	-	-	-	✗	✗	✗	✗	✗	✗	200	315	60	850	15
100-080-0250	✗	✗	✗	✗	-	-	-	-	-	-	200	315	50	550	10
	-	-	-	-	✗	✗	✗	✗	✗	✗	200	315	60	850	15
100-080-0251	✗	✗	✗	✗	-	-	-	-	-	-	200	315	50	550	10
	-	-	-	-	✗	✗	✗	✗	✗	✗	200	315	60	850	15
100-080-0311	✗	✗	✗	✗	-	-	-	-	-	-	200	315	50	550	10
	-	-	-	-	✗	✗	✗	✗	✗	✗	200	315	60	850	15
100-080-0315	✗	✗	✗	✗	-	-	-	-	-	-	200	315	50	550	10
	-	-	-	-	✗	✗	✗	✗	✗	✗	200	315	60	850	15
125-100-0250	✗	✗	✗	✗	-	-	-	-	-	-	200	315	50	550	10
	-	-	-	-	✗	✗	✗	✗	✗	✗	200	315	60	850	15
125-100-0251	✗	✗	✗	✗	-	-	-	-	-	-	200	315	50	550	10
	-	-	-	-	✗	✗	✗	✗	✗	✗	200	315	60	850	15
125-100-0253	✗	✗	✗	✗	-	-	-	-	-	-	200	315	50	550	10
	-	-	-	-	✗	✗	✗	✗	✗	✗	200	315	60	850	15
125-100-0315	✗	✗	✗	✗	-	-	-	-	-	-	200	315	50	550	10
	-	-	-	-	✗	✗	✗	✗	✗	✗	200	315	60	850	15

2362.5/09-EN

8) For motors 132S, 132M, 160M, 160L, 180M, 180L foundation rails or mounting plates are required and included in the scope of supply. For all other combinations foundation rails can be supplied as an option.

Foundation bolts

Foundation bolts

Size	Foundation bolt	Expanding anchor bolt
065-040-0250	M 16 × 200 MU	-
065-050-0200		
065-050-0201		
080-065-0200		
080-065-0201		
080-040-0315	M 16 × 200 MU	F1/18-60 Ø 18 × 160
080-065-0313		
080-065-0315		
100-080-0250		
100-080-0251		
100-080-0311		
100-080-0315		
125-100-0250		
125-100-0251		
125-100-0253		
125-100-0315		

Mounting plate

Mounting plate dimensions and weight

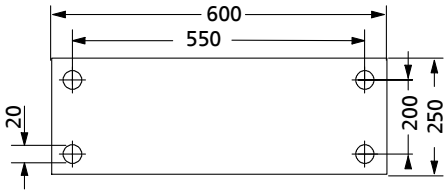

Fig. 4: Mounting plate dimensions

The mounting plate weighs 24 kg. The mounting plate is 25 mm high.

General assembly drawing with list of components

Horizontal installation

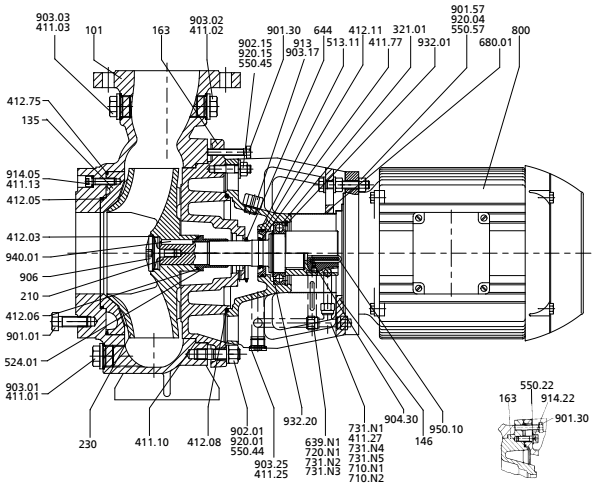

Fig. 5: General assembly drawing of variants GNNG, GDNG

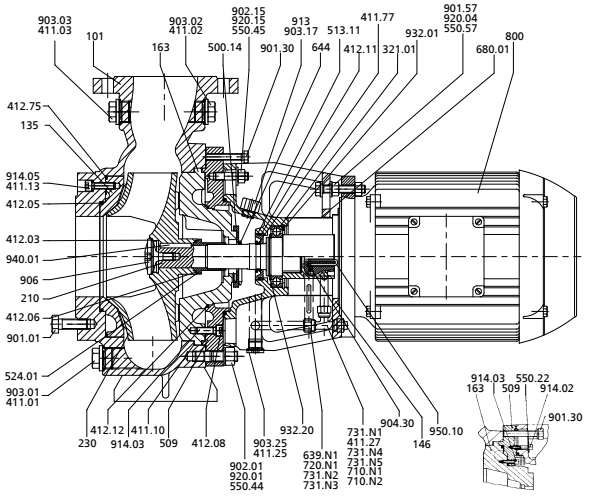

Fig. 6: General assembly drawing of variant DDDD

2362.5/09-EN

Vertical installation

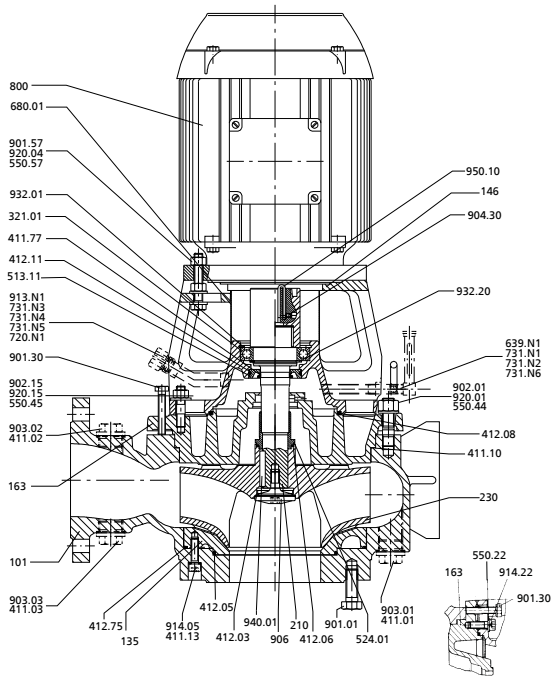

Fig. 7: General assembly drawing of variants GNNG, GDNG

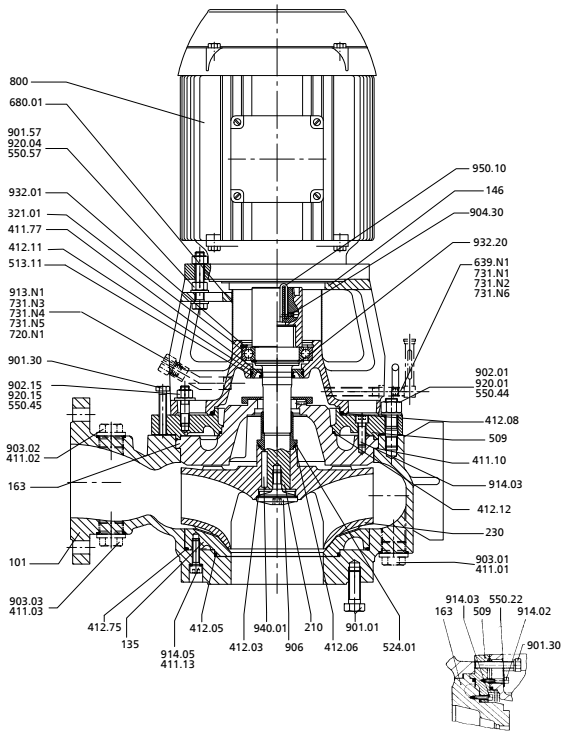

Fig. 8: General assembly drawing of variant DDDD

Mechanical seal

Mechanical seal KSB 4KBL

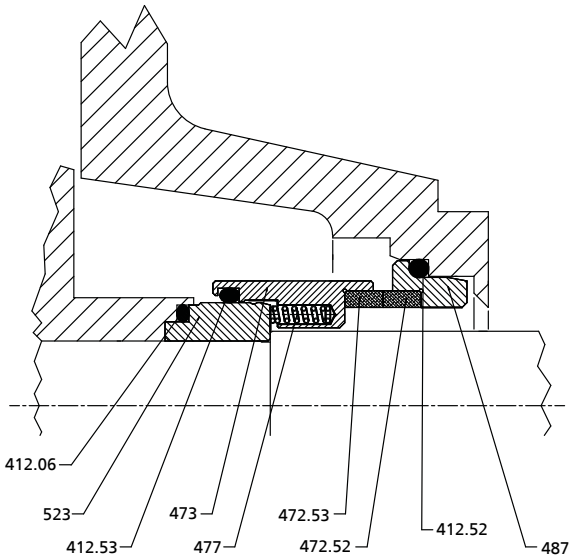

Fig. 9: Mechanical seal KSB 4KBL

Mechanical seal, Burgmann MG1-G6

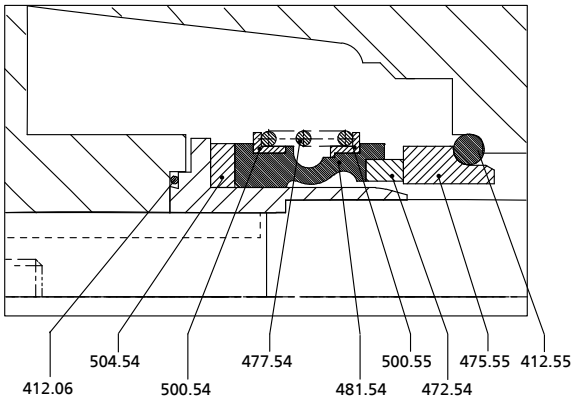

Fig. 10: Mechanical seal, Burgmann MG1-G6

Mechanical seal, John Crane 2100

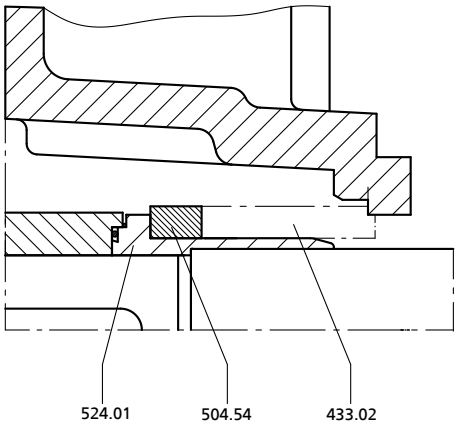

Fig. 11: Mechanical seal, John Crane 2100

List of components

List of components[9)]

Part No.	Comprising	Scope of supply
101	101	Pump casing
	411.01[10)]/.02[10)]/.03[10)]/.10	Joint ring
	550.44	Disc
	901.01	Hexagon head bolt
	902.01	Stud
	903.01[10)]/.02[10)]/.03[10)]	Screw plug
	920.01	Hexagon nut
135	135	Wear plate
	411.13	Joint ring
	412.05/.75	O-ring
	914.05	Hexagon socket head cap screw
146	146	Intermediate lantern
	550.57	Disc
	913	Vent plug
	901.57	Hexagon head bolt
	903.17/.25/.26	Screw plug
	920.04	Hexagon nut
	932.01	Circlip
163	163	Discharge cover
	412.08	O-ring
	550.45/.22	Disc
	901.30	Hexagon head bolt
	902.15	Stud
	920.15	Hexagon nut
	914.22	Hexagon socket head cap screw
	500.14	Ring
210	210	Shaft
	904.30	Grub screw
	932.20	Circlip
	940.01	Key
	950.10	Spring
230	230	Impeller
321.01	321.01	Deep groove ball bearing
411.77	411.77	Joint ring
504.54[11)]	504.54	Spacer ring
509	509	Intermediate ring
	412.12	O-ring
	914.02/.03	Hexagon socket head cap screw
513.11	513.11	Insert ring
	412.11	O-ring
524.01	524.01[12)]	Shaft protecting sleeve
	412.06	O-ring
639[13)]	411.25/.27	Joint ring
	639.N1	Oil level gauge, complete
	644	Lubricating ring
	710.N1/.N2	Pipe
	720/731.N1	Barrel nipple
	731.N6	Pipe union
	731.N2/.N3/.N4/.N5	Angle
	903.25	Screw plug
680.01	680.01	Guard

9) Depending on the design
10) If any
11) On pumps with standardised mechanical seal only
12) This is part of mechanical seal 4KBL
13) On pumps with oil reservoir only

Part No.	Comprising	Scope of supply
800	800	Motor, complete
906	906	Impeller screw
	412.03	O-ring
99-9	99-9	Set of sealing elements
	411.01/.02/.03/.10/.12/.13/.16/.17/.77	Joint ring
	412.03/.05/.06/.08/.11/.75	O-ring

List of components for mechanical seal 4KBL

Part No.	Comprising	Scope of supply
433	412.52/.53	O-ring
	472.53	Primary ring
	472.52	Mating ring
	473	Primary ring carrier
	477	Spring
	487	Mating ring carrier
	523	Shaft protecting sleeve

List of components for mechanical seal MG1-G6

Part No.	Comprising	Scope of supply
433	412.55	O-ring
	472.54	Primary ring
	475.55	Mating ring
	477.54	Spring
	481.54	Bellows
	500.54	Ring
	500.55	Ring

Detailed designation

Designation example

Position																															
1	2	3	4	5	6	7	8	9	10	11	12	13	14	15	16	17	18	19	20	21	22	23	24	25	26	27	28	29	30	31	32	33
K	W	P	F	1	2	5	-	1	0	0	-	0	2	5	0		G	D	N	G	1	0	A			B	H		7			4
See name plate and data sheet																							See data sheet									

Position 1-3: designation

Code	Description
KWP	Type series

Position 4: impeller

Code	Description
K	Channel impeller
O	Open impeller[14)]
F	Free-flow impeller

Position 5-17: size

Code	Description
125	Nominal suction nozzle diameter [mm]
100	Nominal discharge nozzle diameter [mm]
0250	Nominal impeller diameter [mm]

Position 18: casing material

Code	Description
G	EN-GJL-250
D	Noridur 1.4593

Position 19: impeller material

Code	Description
D	Noridur 1.4593
N	ERN

Position 20: wear plate / wear ring material

Code	Description
D	Noridur 1.4593
N	ERN

Position 21: discharge cover material

Code	Description
D	Noridur 1.4593
G	EN-GJL-250

Position 22-23: design version

Code	Description
10	Version

Position 24-25: shaft seal operating mode

Code	Description
A	Single mechanical seal in A-type cover

Position 26: standard

Code	Description
X	One or several non-standard components

Position 27-29: type of installation

Code	Description
0	Figure 0
BH	Close-coupled, horizontal
BV	Close-coupled, vertical

Position 30-32: motor rating

Code	Description
7	7 kW

Position 33: number of poles

Code	Description
2	2 poles
4	4 poles
6	6 poles

14) Available on request only

27/04/2020

2362.5/09-EN

LENNTECH
WATER TREATMENT SOLUTIONS
info@lenntech.com Tel. +31-152-610-900
www.lenntech.com Fax. +31-152-616-289