2368.024/01-US

KSB MINING

LENNTECH
WATER TREATMENT SOLUTIONS

KSB

GIW® LCC Pump Series - Wear Resistant, High Performance Slurry Pumps

GIW® LCC-M

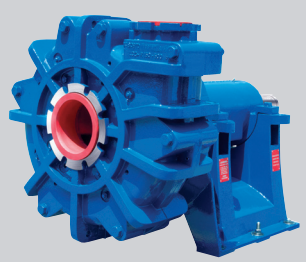

GIW® LCC-R

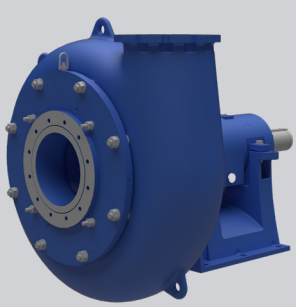

GIW® LCC-H

Solutions for the most Abrasive and Corrosive Slurry Applications

With High Performance Wear Resistance, the GIW® LCC Pump family withstands the most severe slurry applications.

The LCC Pump family is recommended for applications with coarse or fine particles from solids-laden waste to agressive slurries of an abrasive and/or corrosive nature.

LCC's rugged design features, combined with shell, impeller and liner in our proprietary Gasite® material, are recognized worldwide for superior abrasion resistance. In addition, several impeller options to fine tune pump performance, and customized pumping needs are available. These options allow optimum wear life and sustained efficiency.

For high performance and low maintenance the wet end consists of three components: a shell or casing, an impeller that screws onto the shaft and a suction plate/liner to permit easy assembly and disassembly for maintenance and inspections.

Actual Photo: LCC-R in service at a metals processing plant in Mexico.

Choose the GIW® LCC Pump for Aggressive Slurries

Wear Resistant Wet End Parts

- Advanced metallurgy provides wear resistant alloys tailored to meet virtually any slurry pumping condition.

Advanced Hydraulic Design

- Uses the latest technology tried and tested in our Hydraulic Laboratory and in the field.

Single Wall Hard Metal shell

- CAD designed shell and replaceable suction plate/liner
- Interchangeable sizes with 2 pedestals and 4 mechanical ends
- Alloys available for difficult chemical applications

Rubber Lined

- Precision molded rubber parts
- Bolt in liners for easy maintenance
- CNC machined ductile iron casings
- 2-stage operating pressure capacity up to 230 psi (16 bar)

Extra Heavy Hard Metal

- Heavier metal sections and hydraulics suited to severe duties
- 2-stage operating pressure capacity up to 230 psi (16 bar)
- Separate suction liner and non-wearing plate (lower replacement cost)
- Available in sizes 150-500 (6" x 20") and above

High Pressure Hard Metal

- Discharge sizes range from 50 mm to 200 mm
- 3-Stage operating pressure capacity up to 350 psig (24 bar)
- Separate suction liner an non-wearing plate 80 to 250 mm (3"to 10")

Impellers (metal/rubber)

- Twisted three vane design provides high efficiency and low net positive suction head requirements
- Maximum sphere passage
- Available in various materials including alloys, polyurethane and extreme duty versions

Also available in rubber

- Interchangeable with metal impellers used in LCC-H pumps
- Designed with proven advanced hydraulics
- Best wear resistant rubber on the market
- Thickened shrouds and vanes provide maximum wear resistance in heavier slurries

Cartridge Bearing Assembly

- CNC machined cast iron cylindrical housing
- Double row tapered roller bearings handle mechanical and thrust forces
- INPRO® Bearing Isolators are standard
- Oil or grease lubrication

Pedestal

- CNC machined cast iron
- Self-aligning concentric bearing supports
- Integrated impeller gap adjustment screw
- Two pedestal sizes for entire LCC range

Technical Data

Discharge	2 to 12 in (50 to 300 mm) *High Pressure 2 to 8 in (50 to 200 mm)
Flow rates	up to 14,100 gpm (3,200 m³/h)
Total head	up to 300 ft (90 m)
Power rating	up to 750 Hp (560 kW)
Temperature limit	up to 248°F (+120°C)

Applications

- Sand and Gravel
- In-plant Processes
- Mineral Processing
- Secondary Grinding
- Tailings
- Chemical Slurry Service
- Coal Preparation

The LCC Pump Series offers a wide selection range

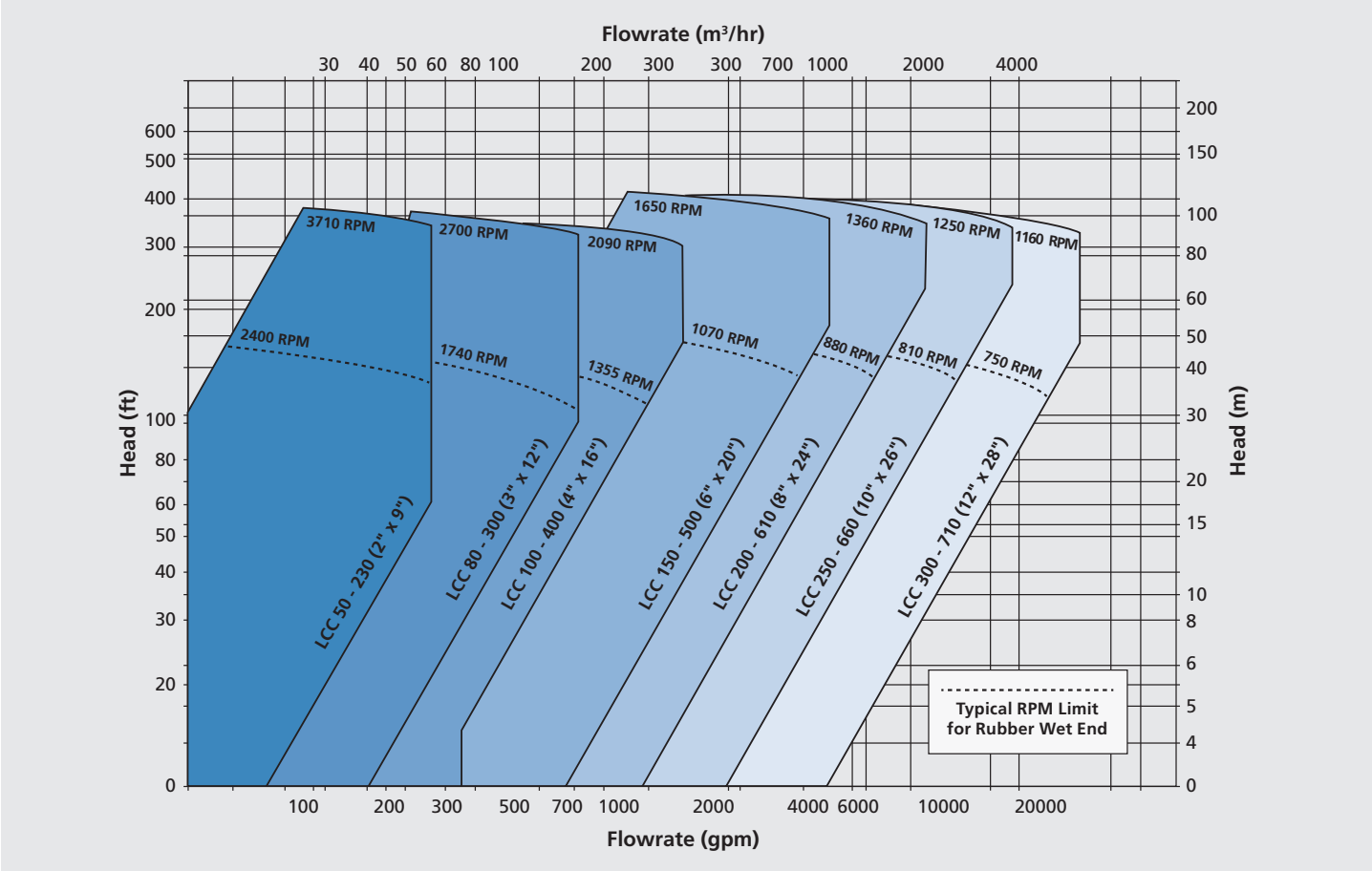

LCC Seal Arrangements

1 Mechanical Seal

- Use when gland water cannot be added to process
- Available for standard and chemical duty
- Dry design, optional back flush, and double

2 Stuffing Box

- Standard KE design with lantern ring and packing
- Throttle bushing design for special applications

3 *Expeller Seal

- Use when process dilution must be minimized
- Expeller rotor and chamber balance pressures at gland packing for zero leakage
- Exclusive internal diverter provides additional efficiency
- Stuffing box includes port for maintenance flushing

*Note: Not applicable on HP Pumps

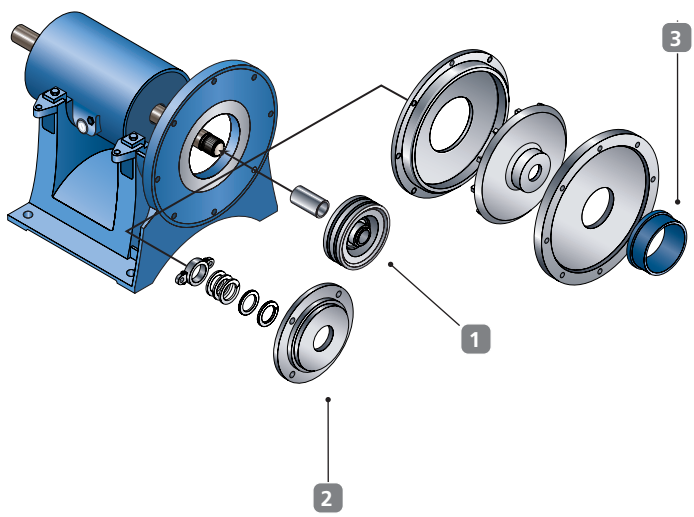

LCC Metal Dimensions

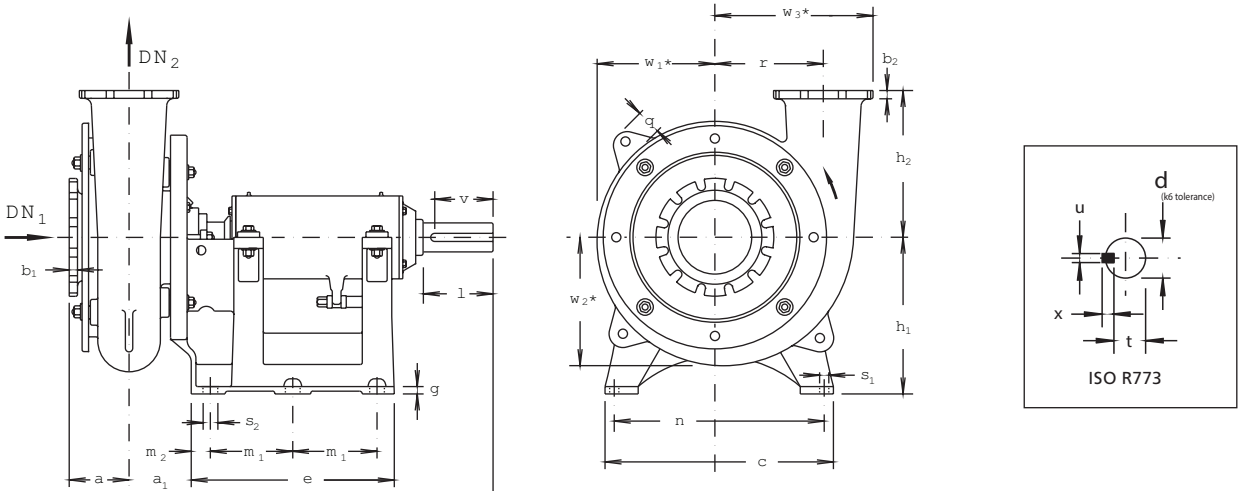

Pump and Shaft Size		Pump														*May exceed h_1 Dimensions in inches (US) Shaft in mm
		DN_1	DN_2	a	a_1	b_1	b_2	f	h_1	h_2	r	w_1 (ref.)	w_2 (ref.)	w_3 (ref.)	q (ref.)	
(2"x9")	2	3	2	4.53	4.61 1)	0.87	0.79	32.09 1)	14.57	9.06	5.71	6.69	6.89	8.71	1.56	
(3"x12")	2	4	3	4.72	4.96 1)	0.87	0.87	32.40 1)	14.57	10.63	7.87	8.86	9.45	11.62	1.88	
(4"x16")	2	6	4	5.32	5.43 1)	0.94	0.94	32.87 1)	14.57	12.80	9.84	11.22	11.81	14.34	2.19	
	3	6	4	5.32	7.91 3)	0.94	0.94	43.19 3)	21.26	12.80	9.84	11.22	11.81	14.34	2.19	
150-500	3	8	6	6.89	7.44 2)	1.26	0.94	42.72 2)	21.26	16.14	12.21	14.17	14.76	17.71	2.63	
(6"x20")	4	8	6	6.89	7.44 2)	1.26	1.06	48.23 2)	21.26	16.14	12.21	14.17	14.76	17.71	2.63	
200-610	3	10	8	8.27	8.62 2)	1.26	1.06	43.90 2)	21.26	20.08	14.17	16.54	17.32	20.92	3.38	
(8"x24")	4	10	8	8.27	8.62 2)	1.26	1.26	49.41 2)	21.26	20.08	14.17	16.54	17.32	20.92	3.38	
	5	10	8	8.27	8.62 2)	1.26	1.26	52.56 2)	21.26	20.08	14.17	16.54	17.32	20.92	3.38	
250-660	3	12	10	9.65	9.80 2)	1.26	1.26	45.08 2)	21.26	22.05	15.95	18.90	20.08	23.95	3.94	
(10"x26")	4	12	10	9.65	9.80 2)	1.26	1.26	50.59 2)	21.26	22.05	15.95	18.90	20.08	23.95	3.94	
	5	12	10	9.65	9.80 2)	1.26	1.26	53.74 2)	21.26	22.05	15.95	18.90	20.08	23.95	3.94	
300-710	3	14	12	11.42	11.38 2)	1.46	1.26	46.65 2)	21.26	22.05	18.11	22.05	24.02	27.61	3.94	
(12"x28")	4	14	12	11.42	11.38 2)	1.46	1.26	52.17 2)	21.26	22.05	18.11	22.05	24.02	27.61	3.94	
	5	14	12	11.42	11.38 2)	1.46	1.26	55.32 2)	21.26	22.05	18.11	22.05	24.02	27.61	3.94	

1) When assembled with expeller + 2.76 in 2) When assembled with expeller + 3.94 in 3) No expeller

Shaft Size	Pedestal and Shaft End													Dimensions in inches (US) Shaft in mm
	c	e	g	m_1	m_2	n	s_1	s_2	d (mm)	l	t (mm)	u (mm)	v (mm)	x (mm)
2	20.87	19.53	0.79	7.78	1.85	18.90	1.00	1.56	50	5.98	44.5	14	100	9
3	31.50	27.40	1.00	11.32	2.60	28.54	1.38	2.00	70	6.77	62.5	20	140	12
4	31.50	27.40	1.00	11.32	2.60	28.54	1.38	2.00	100	10.04	90.0	28	200	16
5	31.50	27.40	1.00	11.32	2.60	28.54	1.38	2.00	125	10.43	113.9	32	200	18

LCC Rubber Dimensions

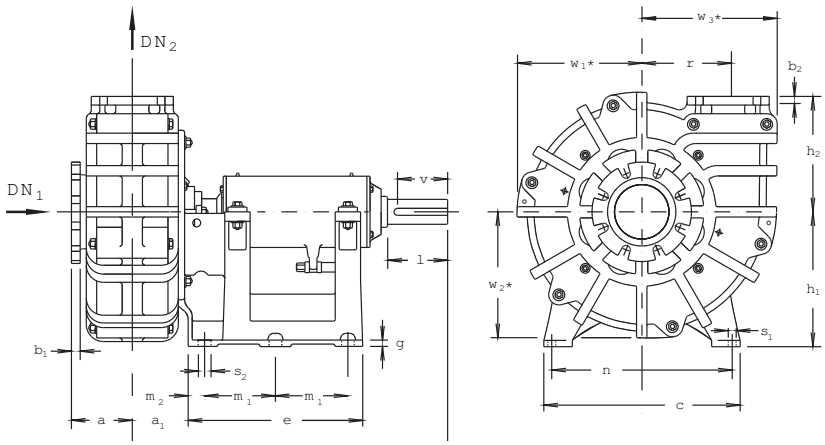

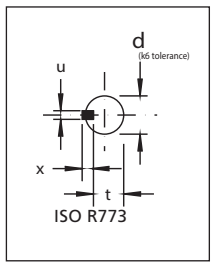

Pump and Shaft Size		Pump													*May exceed h_1 Dimensions in inches (US) Shaft in mm
		DN_1	DN_2	a	a_1	b_1	b_2	f	h_1	h_2	r	w_1 (ref.)	w_2 (ref.)	w_3 (ref.)	
(2"x9")	2	3	2	4.53	4.61[1)]	0.87	0.79	32.09[1)]	14.57	9.06	5.71	8.82	9.17	9.49	
(3"x12")	2	4	3	4.72	4.96[1)]	0.87	0.87	32.40[1)]	14.57	10.63	7.87	11.38	11.81	12.28	
(4"x16")	2	6	4	5.32	5.43[1)]	0.94	0.94	32.87[1)]	14.57	12.80	9.84	14.29	14.84	15.43	
150-500	3	8	6	6.89	7.44[2)]	1.26	1.06	42.72[2)]	21.26	16.14	12.21	17.95	18.70	19.41	
(6"x20")	4	8	6	6.89	7.44[2)]	1.26	1.06	48.23[2)]	21.26	16.14	12.21	17.95	18.70	19.41	
200-610	3	10	8	8.27	8.62[2)]	1.26	1.26	43.90[2)]	21.26	20.08	14.17	21.14	21.97	22.80	
(8"x24")	4	10	8	8.27	8.62[2)]	1.26	1.26	49.41[2)]	21.26	20.08	14.17	21.14	21.97	22.80	
	5	10	8	8.27	8.62[2)]	1.26	1.26	52.56[2)]	21.26	20.08	14.17	21.14	21.97	22.80	
250-660	3	12	10	9.65	9.80[2)]	1.26	1.26	45.08[2)]	21.26	22.05	15.95	23.82	25.00	26.18	
(10"x26")	4	12	10	9.65	9.80[2)]	1.26	1.26	50.59[2)]	21.26	22.05	15.95	23.82	25.00	26.18	
	5	12	10	9.65	9.80[2)]	1.26	1.26	53.74[2)]	21.26	22.05	15.95	23.82	25.00	26.18	
300-710	3	14	12	11.42	11.38[2)]	1.46	1.26	46.65[2)]	21.26	25.20	18.11	27.24	28.98	30.75	
(12"x28")	4	14	12	11.42	11.38[2)]	1.46	1.26	52.17[2)]	21.26	25.20	18.11	27.24	28.98	30.75	
	5	14	12	11.42	11.38[2)]	1.46	1.26	55.32[2)]	21.26	25.20	18.11	27.24	28.98	30.75	

1) When assembled with expeller + 2.76 in 2) When assembled with expeller + 3.94 in

Shaft Size		Pedestal and Shaft End												Dimensions in inches (US) Shaft in mm
	c	e	g	m_1	m_2	n	s_1	s_2	d (mm)	l	t (mm)	u (mm)	v (mm)	x (mm)
2	20.87	19.53	0.79	7.78	1.85	18.90	1.00	1.56	50	5.98	44.5	14	100	9
3	31.50	27.40	1.00	11.32	2.60	28.54	1.38	2.00	70	6.77	62.5	20	140	12
4	31.50	27.40	1.00	11.32	2.60	28.54	1.38	2.00	100	10.04	90.0	28	200	16
5	31.50	27.40	1.00	11.32	2.60	28.54	1.38	2.00	125	10.43	113.9	32	200	18

LCC Extra Heavy & High Pressure Dimensions

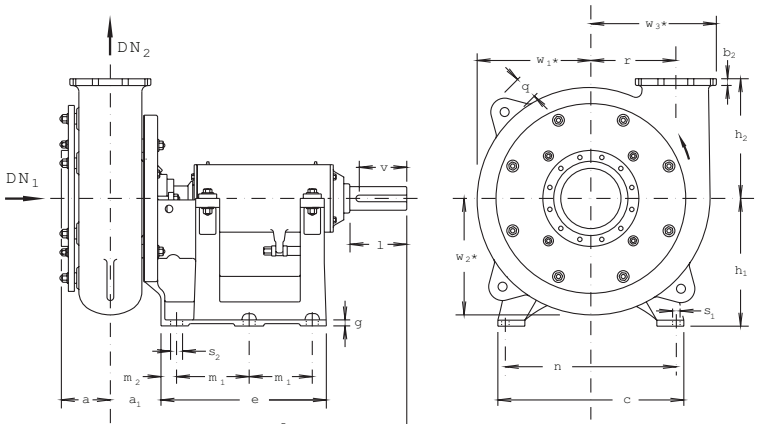

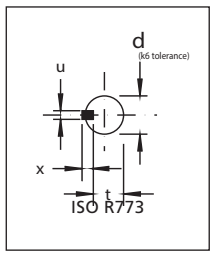

Pump and Shaft Size		Pump													*May exceed h_1 Dimensions in inches (US) Shaft in mm
		DN_1	DN_2	a	a_1	b_2	f	h_1	h_2	r	w_1 (ref.)	w_2 (ref.)	w_3 (ref.)	q (ref.)	
150-500	3	8	6	6.89	7.44[2)]	1.06	42.72[2)]	21.26	16.14	12.21	16.34	16.73	17.71	2.63	
(6"x20")	4	8	6	6.89	7.44[2)]	1.06	48.23[2)]	21.26	16.14	12.21	16.34	16.73	17.71	2.63	
200-610	3	10	8	8.27	8.62[2)]	1.26	43.90[2)]	21.26	20.08	14.17	18.90	19.49	20.92	3.94	
(8"x24")	4	10	8	8.27	8.62[2)]	1.26	49.41[2)]	21.26	20.08	14.17	18.90	19.49	20.92	3.94	
	5	10	8	8.27	8.62[2)]	1.26	52.56[2)]	21.26	20.08	14.17	18.90	19.49	20.92	3.94	
250-660	3	12	10	9.65	9.80[2)]	1.26	45.08[2)]	21.26	22.05	15.95	21.65	22.44	23.95	3.94	
(10"x26")	4	12	10	9.65	9.80[2)]	1.26	50.59[2)]	21.26	22.05	15.95	21.65	22.44	23.95	3.94	
	5	12	10	9.65	9.80[2)]	1.26	53.74[2)]	21.26	22.05	15.95	21.65	22.44	23.95	3.94	
300-710	3	14	12	11.42	11.38[2)]	1.26	46.65[2)]	21.26	25.20	18.11	25.59	26.97	27.61	3.94	
(12"x28")	4	14	12	11.42	11.38[2)]	1.26	52.17[2)]	21.26	25.20	18.11	25.59	26.97	27.61	3.94	
	5	14	12	11.42	11.38[2)]	1.26	55.32[2)]	21.26	25.20	18.11	25.59	26.97	27.61	3.94	

1) When assembled with expeller + 2.76 in 2) When assembled with expeller + 3.94 in

Slysel Reference - High Pressure															
Pump #	**Shaft Size**														*May exceed h_1 Dimensions in inches (US) Shaft in mm
		DN_1	DN_2	a	a_1	b_2	f	h_1	h_2	r	w_1 (ref.)	w_2 (ref.)	w_3 (ref.)	q (ref.)	
1087E - 50-230 (2" x 9")	**2**	3	2	4.65	4.61	0.79	32.13	14.57	9.06	5.71	7.86	8.44	8.66	1.56	
1088E - 80-300 (3" x 12")	**2**	4	3	4.37	1.85	0.87	32.44	8.56	10.63	7.87	8.88	10.13	11.22	1.57	
1093E - 100-400 (4" x 16")	**3**	6	4	6.02	7.81	0.94	48.38	21.26	12.80	9.84	10.13	13.17	14.60	2.19	
1091E - 150-500 (6" x 20")	**4**	8	6	6.99	9.76	1.50	57.73	21.26	20.20	12.24	17.60	17.60	17.75	4.69	
1092E - 200-610 (8" x 24")	**4**	10	8	8.29	10.39	1.63	59.54	21.26	24.05	14.17	20.11	19.95	22.15	4.69	

Shaft Size		Pedestal and Shaft End												Dimensions in inches (US) Shaft in mm
	c	e	g	m_1	m_2	n	s_1	s_2	d (mm)	l	t (mm)	u (mm)	v (mm)	x (mm)
2	20.87	19.53	0.79	7.78	1.85	18.90	1.00	1.56	50	5.98	44.5	14	100	9
3	31.50	27.40	1.00	11.32	2.60	28.54	1.38	2.00	70	6.77	62.5	20	140	12
4	31.50	27.40	1.00	11.32	2.60	28.54	1.38	2.00	100	10.04	90.0	28	200	16
5	31.50	27.40	1.00	11.32	2.60	28.54	1.38	2.00	125	10.43	113.9	32	200	18

LENNTECH
WATER TREATMENT SOLUTIONS
info@lenntech.com Tel. +31-152-610-900
www.lenntech.com Fax. +31-152-616-289

0000.000-US / 01.22 / © GIW Industries, Inc. 2021· Subject to technical modifications.