LUV – Reactor coolant / Reactor water clean-up pump

Applications:

- Reactor water clean-up systems

More information:
www.ksb.com/products

LUV – Reactor coolant / Reactor water clean-up pump

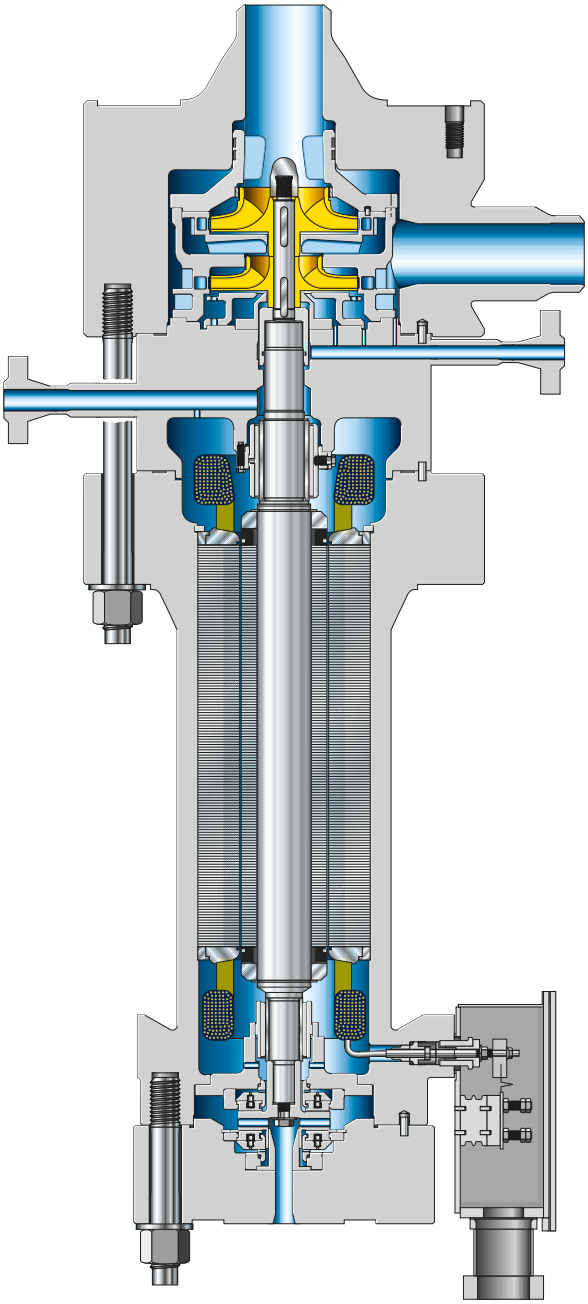

High safety and increased plant availability

- Self-contained cooling and lubrication through integrated impeller
- Hermetically sealed pump casing
- No shaft seals
- Symmetrically forged and thermoelastic casing, optimized to handle temperature and pressure transients
- Hot standby at full pressure and temperature loads

Low life cycle costs (LCC)

- Long maintenance intervals – major inspection every 10 years
- Stainless steel for all pump parts eliminates corrosion

Reduced radiation exposure (ALARA) and enhanced environmental protection

- Zero leakage
- Long inspection intervals
- Asbestos-free

Quick replacement and maintenance

- Pull-out design – the entire pump/motor unit can be pulled out without having to remove the pump casing, which also reduces the maintenance personnel's radiation exposure.
- Easy access to wear parts

Technical data*

Size	DN 40-600
Capacity	up to 7,000 m³/h
Head	up to 300 m
Operating pressure	up to 320 bar
Temperature	up to +430 °C
Frequency	50 Hz / 60 Hz

*Higher ratings on request

1128.022/04-EN / 02.14 / © KSB Aktiengesellschaft 2014 · Subject to technical modification without prior notice

LENNTECH
WATER TREATMENT SOLUTIONS
info@lenntech.com Tel. +31-152-610-900
www.lenntech.com Fax. +31-152-616-289

KSB