LENNTECH
WATER TREATMENT SOLUTIONS

Waste Water, Condensate and Heat Transfer Fluid Pump

# MK

## Type Series Booklet

KSB

## Legal information/Copyright

Type Series Booklet MK

All rights reserved. The contents provided herein must neither be distributed, copied, reproduced, edited or processed for any other purpose, nor otherwise transmitted, published or made available to a third party without the manufacturer's express written consent.

Subject to technical modification without prior notice.

© KSB SE & Co. KGaA, Frankenthal 19/06/2019

# Contents

**Drainage Pumps / Waste Water Pumps ..... 4**
Waste Water Pumps / Condensate Pumps / Heat Transfer Fluid Pumps ..... 4
MK ..... 4
Main applications ..... 4
Fluids handled ..... 4
Operating data ..... 4
Design details ..... 4
Designation ..... 5
Materials ..... 5
Product benefits ..... 5
Product information ..... 5
Product information as per Regulation No. 1907/2006 (REACH) ..... 5
Selection tables ..... 6
Technical data ..... 7
MK, MKA variants without motor ..... 7
MK-B, MKA-B variants without motor ..... 7
MK-C, MKA-C variants without motor ..... 7
MKY variant without motor ..... 8
Motors ..... 8
Characteristic curves ..... 9
n = 2900 rpm ..... 9
MK/MKA 20-3, 20-4, 20-5, 20-6; n = 2900 rpm ..... 9
MKY 20-3, 20-4, 20-5, 20-6; n = 2900 rpm ..... 10
n = 1450 rpm ..... 11
MK/MKA 20-1, 20-2; n = 1450 rpm ..... 11
MKY 20-1, 20-2; n = 1450 rpm ..... 12
Dimensions ..... 13
MK/MKA ..... 13
MKY ..... 14
Accessories ..... 15
Lubrication equipment (optional) ..... 15
Pump accessories ..... 15
Float switch ..... 15
Control units and switchgear ..... 16
Alarm switchgears for pumps without ATEX ..... 17
LevelControl Basic 2 ..... 17
Control unit/switchgear accessories ..... 18
General assembly drawings/exploded views with list of components ..... 18
MK, MKA ..... 18
MK, MKA - grease-lubricated ..... 19
MK, MKA - internally lubricated by fluid handled ..... 20
MK, MKA - lubricated by an external fluid ..... 21
MKY ..... 22

# Drainage Pumps / Waste Water Pumps

## Waste Water Pumps / Condensate Pumps / Heat Transfer Fluid Pumps

# MK

### Main applications

MK, MKA:

- Automatic drainage of rooms at risk of flooding
- Drainage of collecting basins or pits
- Condensate return from non-pressurised tanks

MKY:

- Condensate return systems
- Heating systems
- Heat transfer systems

### Fluids handled

MK, MKA:

- Grey water
- Oil
- Emulsions
- Aggressive fluids
- Condensate

MKY:

- Condensate
- Heat transfer fluids below boiling point

### Operating data

Operating properties

| Characteristic | | Value | |
|---|---|---|---|
| | | MK, MKA | MKY |
| Flow rate | Q [m³/h] | 2 - 36 | |
| | Q [l/s] | 0,56 - 10 | |
| Head | H [m] | ≤ 19 | |
| Fluid temperature | T [°C] | ≥ -10 | |
| | | ≤ +90 [1] | ≤ +200 [2] |

### Design details

### Design

- Volute casing
- Vertical installation
- Rigid connection between pump and motor
- Single-stage

### Drive

- KSB surface-cooled IEC three-phase current squirrel-cage motor
- 230/400 V
- Type of construction IM V1
- Enclosure IP55
- Motors integrated in explosion-proof pump sets are supplied in Ex eb IIB / Ex db eb IIC type of protection.

### Shaft seal

MK, MKA:

- Vapour barrier

MKY:

- Gland packing

### Impeller type

- Three-channel impeller

### Bearings

Drive end:

- Radial ball bearing
- Greased for life

Impeller end:

- Bearing bush
- Product-lubricated
- Optional:
  - Internal lubrication by fluid handled
  - Grease lubrication
  - Lubrication by external fluid

1) For versions with a bearing bush made of acrylonitrile butadiene rubber: up to 80 °C or temperature class T5 in acc. with ISO 80079-36 (EN 13463-1)
2) For water up to 110 °C

## Explosion protection

MK, MKA:

- Available
- For explosion-proof variants one of the optional lubrication types must be used for the bearing bush.

MKY:

- Not available

## Designation

### MK A - B 20 - 1/ 100

Designation key

| Code | Description | |
|---|---|---|
| MK | Type series | |
| A | Variant | |
| | -[3] | Pump without discharge pipe, without cover plate, with motor |
| | A | Pump with square mounting/cover plate and discharge pipe, with flange-mounted motor |
| | Y | Pump with round mounting/cover plate and flanged discharge pipe, lantern, gland packing and motor |
| B | Casing material | |
| | | Grey cast iron |
| | B | Tin bronze |
| | C | Chrome nickel molybdenum cast steel |
| 2 | Pipe connection | |
| | 2 | Rp 2 |
| 0 | Design status | |
| 1 | Power code (defines the impeller diameter) | |
| | 1 - 6 | |
| 100 | Installation depth [cm] | |
| | 100, 190, 280 | |

## Materials

Overview of available materials

| Description | Design | | | |
|---|---|---|---|---|
| | MK, MKA | MK-B, MKA-B | MK-C, MKA-C | MKY |
| Casing/impeller | Grey cast iron | Tin bronze | Chrome nickel molybdenum cast steel | Grey cast iron |
| Shaft/coupling | Chrome steel | Chrome nickel molybdenum steel | Chrome nickel molybdenum steel | Chrome steel |
| Discharge pipe | Galvanised steel | Chrome nickel molybdenum steel | Chrome nickel molybdenum steel | Steel |

## Product benefits

- Fitted with a three-channel impeller for fluids containing solids of up to 18 mm
- Rod-actuated float switch for high temperatures and viscous fluids
- Flexible with support column for variable installation depths
- Integrated suction strainer prevents clogging.
- Durable with robust deep groove ball bearings

## Product information

### Product information as per Regulation No. 1907/2006 (REACH)

For information as per chemicals Regulation (EC) No 1907/2006 (REACH), see http://www.ksb.com/reach.

3) Blank

## Selection tables

Symbols key

| Symbol | Description |
|---|---|
| ✗ | Standard |
| ■ | On request |
| - | Not available |

Bearing bush depending on the type series

| Type series | Bearing bush | | | | | | | |
|---|---|---|---|---|---|---|---|---|
| | Steel/ polytetrafluoroethylene | Tin bronze | Grey cast iron | Acrylonitrile butadiene rubber | Fluoroelastomer | Polytetrafluoroethylene, glass fibre reinforced | Carbon, phenolic resin impregnated | Carbon, antimony impregnated |
| MK, MKA | ✗ | ■ | ■ | ■ | ■ | - | - | - |
| MK-B, MKA-B | - | ✗ | - | ■ | ■ | ■ | ■ | - |
| MK-C, MKA-C | - | - | - | ■ | ■ | ■ | ✗ | - |
| MKY | - | - | - | ■ | ■ | - | - | ✗ |

Bearing bush depending on material properties

| Bearing bush | Gliding properties | Sand resistance | Dry running ability |
|---|---|---|---|
| Steel/polytetrafluoroethylene | Very good | Satisfactory | Good |
| Tin bronze | Good | Average | Poor |
| Grey cast iron | Average | Average | Low |
| Acrylonitrile butadiene rubber | Good | Good | Poor |
| Fluoroelastomer | Good | Good | Poor |
| Polytetrafluoroethylene, glass fibre reinforced | Good | Poor | Poor |
| Carbon, phenolic resin impregnated | Good | Poor | Low |
| Carbon, antimony impregnated | Good | Poor | Low |

Lubrication options depending on the bearing bush

| Bearing bush | Internal lubrication by fluid handled | Lubrication by external fluid | Grease lubrication |
|---|---|---|---|
| Steel/polytetrafluoroethylene | ✗ | - | - |
| Tin bronze | ✗ | ✗ | ✗ |
| Grey cast iron | ✗ | ✗ | ✗ |
| Acrylonitrile butadiene rubber | ✗ | ✗ | - |
| Fluoroelastomer | ✗ | ✗ | - |
| Polytetrafluoroethylene, glass fibre reinforced | ✗ | - | - |
| Carbon, phenolic resin impregnated | ✗ | - | - |
| Carbon, antimony impregnated | - | - | - |

## Technical data

### MK, MKA variants without motor

Technical data

| MK, MKA | MK | | MKA | |
|---|---|---|---|---|
| | [kg] | Mat. No. | [kg] | Mat. No. |
| 20-1/100 | 34 | 48247599 | 62 | 48247617 |
| 20-1/190 | 50 | 48247600 | 82 | 48247618 |
| 20-1/280 | 66 | 48247601 | 102 | 48247619 |
| 20-2/100 | 34 | 48247602 | 62 | 48247620 |
| 20-2/190 | 50 | 48247603 | 82 | 48247621 |
| 20-2/280 | 66 | 48247604 | 102 | 48247622 |
| 20-3/100 | 35 | 48247605 | 63 | 48247623 |
| 20-3/190 | 51 | 48247606 | 83 | 48247624 |
| 20-3/280 | 67 | 48247607 | 103 | 48247625 |
| 20-4/100 | 35 | 48247608 | 63 | 48247626 |
| 20-4/190 | 51 | 48247609 | 83 | 48247627 |
| 20-4/280 | 67 | 48247610 | 103 | 48247628 |
| 20-5/100 | 34 | 48247611 | 62 | 48247629 |
| 20-5/190 | 50 | 48247612 | 72 | 48247630 |
| 20-5/280 | 66 | 48247613 | 102 | 48247631 |
| 20-6/100 | 35 | 48247614 | 63 | 48247632 |
| 20-6/190 | 51 | 48247615 | 83 | 48247633 |
| 20-6/280 | 68 | 48247616 | 104 | 48247634 |

### MK-B, MKA-B variants without motor

Technical data

| MK-B, MKA-B | MK-B | | MKA-B | |
|---|---|---|---|---|
| | [kg] | Mat. No. | [kg] | Mat. No. |
| 20-1/100 | 40 | 48247635 | 71 | 48247653 |
| 20-1/190 | 58 | 48247636 | 94 | 48247654 |
| 20-1/280 | 76 | 48247637 | 116 | 48247655 |
| 20-2/100 | 40 | 48247638 | 71 | 48247656 |
| 20-2/190 | 58 | 48247639 | 94 | 48247657 |
| 20-2/280 | 76 | 48247640 | 116 | 48247658 |
| 20-3/100 | 41 | 48247641 | 72 | 48247659 |
| 20-3/190 | 59 | 48247642 | 95 | 48247660 |
| 20-3/280 | 77 | 48247643 | 117 | 48247661 |
| 20-4/100 | 41 | 48247644 | 72 | 48247662 |
| 20-4/190 | 59 | 48247645 | 95 | 48247663 |
| 20-4/280 | 77 | 48247646 | 117 | 48247664 |
| 20-5/100 | 40 | 48247647 | 71 | 48247665 |
| 20-5/190 | 58 | 48247648 | 94 | 48247666 |
| 20-5/280 | 76 | 48247649 | 116 | 48247667 |
| 20-6/100 | 41 | 48247650 | 68 | 48247668 |
| 20-6/190 | 59 | 48247651 | 91 | 48247669 |
| 20-6/280 | 79 | 48247652 | 113 | 48247670 |

### MK-C, MKA-C variants without motor

Technical data

| MK-C, MKA-C | MK-C | | MKA-C | |
|---|---|---|---|---|
| | [kg] | Mat. No. | [kg] | Mat. No. |
| 20-1/100 | 37 | 48247671 | 69 | 48247689 |
| 20-1/190 | 54 | 48247672 | 90 | 48247690 |
| 20-1/280 | 71 | 48247673 | 110 | 48247691 |
| 20-2/100 | 37 | 48247674 | 69 | 48247692 |

| MK-C, MKA-C | MK-C | | MKA-C | |
|---|---|---|---|---|
| | [kg] | Mat. No. | [kg] | Mat. No. |
| 20-2/190 | 54 | 48247675 | 90 | 48247693 |
| 20-2/280 | 71 | 48247676 | 110 | 48247694 |
| 20-3/100 | 37 | 48247677 | 67 | 48247695 |
| 20-3/190 | 54 | 48247678 | 89 | 48247696 |
| 20-3/280 | 72 | 48247679 | 111 | 48247697 |
| 20-4/100 | 37 | 48247680 | 67 | 48247698 |
| 20-4/190 | 54 | 48247681 | 89 | 48247699 |
| 20-4/280 | 72 | 48247682 | 111 | 48247700 |
| 20-5/100 | 37 | 48247683 | 67 | 48247701 |
| 20-5/190 | 54 | 48247684 | 88 | 48247702 |
| 20-5/280 | 71 | 48247685 | 110 | 48247703 |
| 20-6/100 | 38 | 48247686 | 68 | 48247704 |
| 20-6/190 | 55 | 48247687 | 89 | 48247705 |
| 20-6/280 | 73 | 48247688 | 111 | 48247706 |

## MKY variant without motor

Technical data

| MKY | [kg] | Mat. No. |
|---|---|---|
| 20-1/100 | 72 | 48247707 |
| 20-1/190 | 92 | 48247708 |
| 20-1/280 | 112 | 48247709 |
| 20-2/100 | 72 | 48247710 |
| 20-2/190 | 92 | 48247711 |
| 20-2/280 | 112 | 48247712 |
| 20-3/100 | 73 | 48247713 |
| 20-3/190 | 93 | 48247714 |
| 20-3/280 | 113 | 48247715 |
| 20-4/100 | 72 | 48247716 |
| 20-4/190 | 92 | 48247717 |
| 20-4/280 | 112 | 48247718 |
| 20-5/100 | 73 | 48247719 |
| 20-5/190 | 93 | 48247720 |
| 20-5/280 | 114 | 48247721 |
| 20-6/100 | 71 | 48247722 |
| 20-6/190 | 91 | 48247723 |
| 20-6/280 | 112 | 48247724 |

## Motors

Standard design V1, 400 V, 50 Hz, enclosure IP55

| Size | Make | Number of poles | Efficiency class | $P_2$ | I | Mat. No. | [kg] |
|---|---|---|---|---|---|---|---|
| | | | | [kW] | [A] | | |
| 80M | | 4 | IE1 | 0,55 | 1,5 | 01053394 | 9 |
| 80M | | 4 | IE1 | 0,55 | 1,5 | 01036172 | 9 |
| 80M | KSB's choice | 4 | IE3 | 0,75 | 1,66 | 01583978 | 15 |
| 80M | | 4 | IE3 | 0,75 | 1,75 | 01470733 | 14 |
| 80M | KSB's choice | 2 | IE3 | 1,10 | 2,14 | 01583976 | 14 |
| 80M | | 2 | IE3 | 1,10 | 2,25 | 01470731 | 12 |
| 90S | KSB's choice | 2 | IE3 | 1,50 | 2,85 | 01583977 | 18 |
| 90S | | 2 | IE3 | 1,50 | 3,00 | 01470732 | 15 |
| 90L | KSB's choice | 2 | IE3 | 2,20 | 3,99 | 01583981 | 21 |
| 90L | | 2 | IE3 | 2,20 | 4,20 | 01470770 | 19 |

Motors for operation in potentially explosive atmospheres can also be ordered from KSB.

## Characteristic curves

**n = 2900 rpm**

**MK/MKA 20-3, 20-4, 20-5, 20-6; n = 2900 rpm**

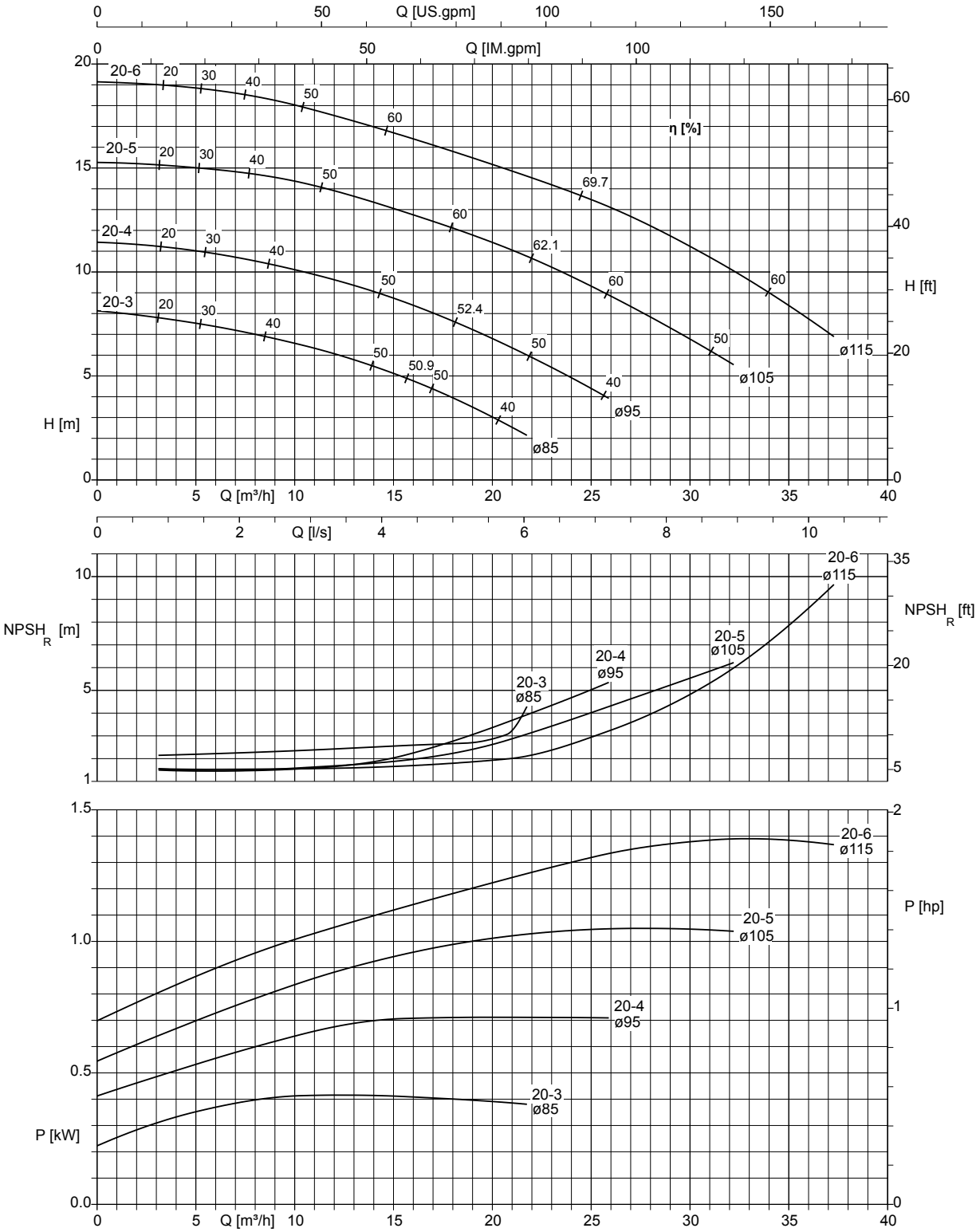

**MKY 20-3, 20-4, 20-5, 20-6; n = 2900 rpm**

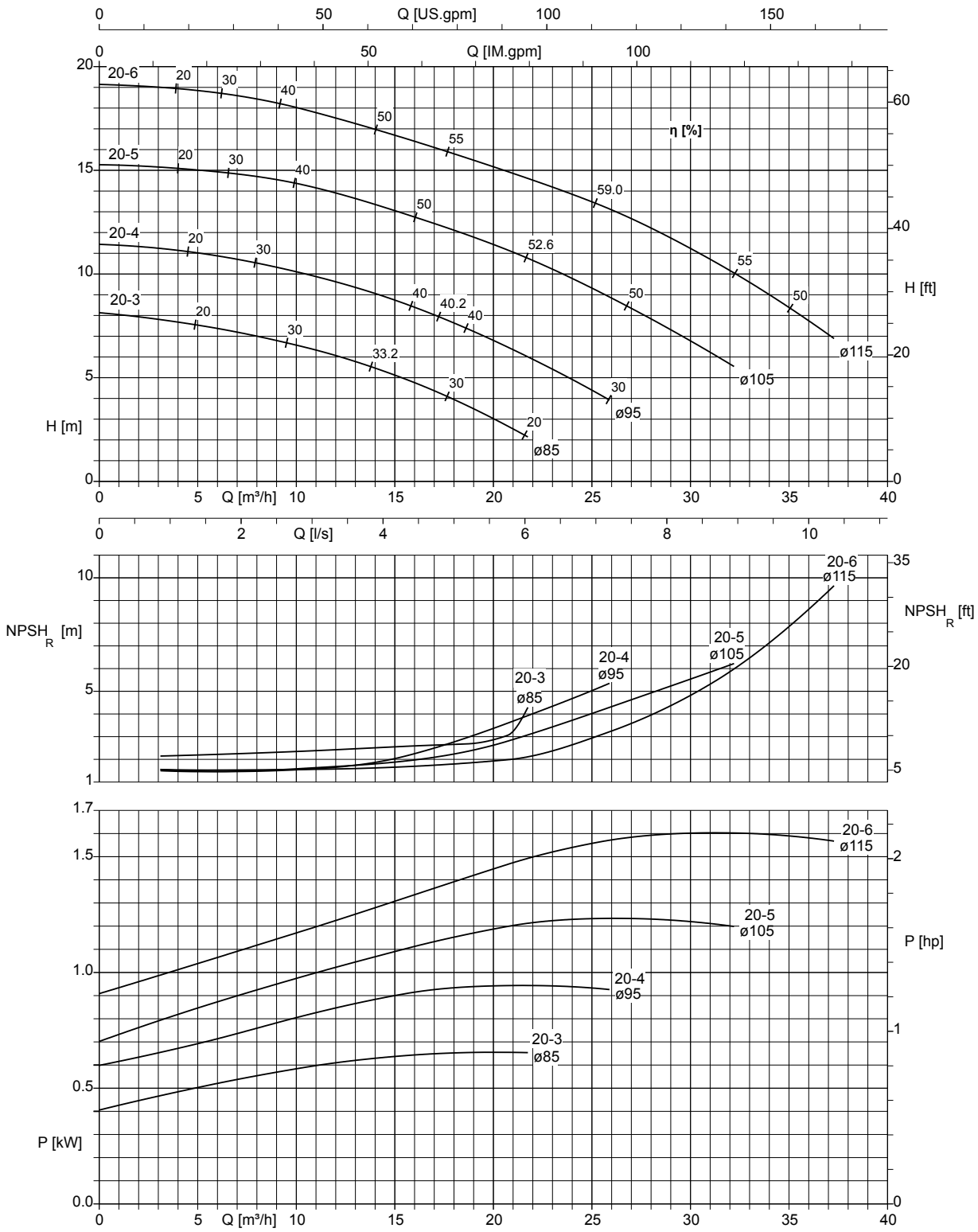

**n = 1450 rpm**

**MK/MKA 20-1, 20-2; n = 1450 rpm**

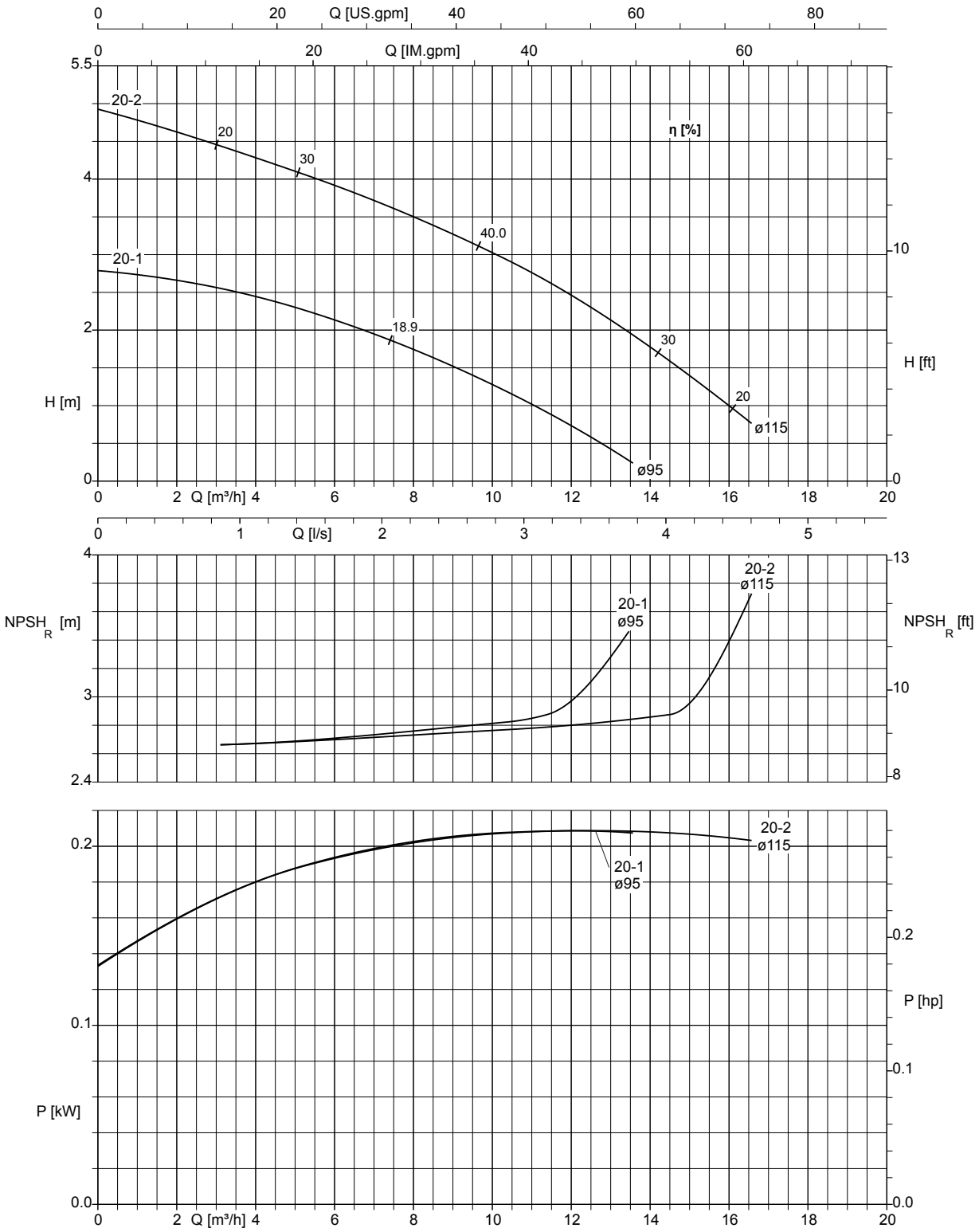

**MKY 20-1, 20-2; n = 1450 rpm**

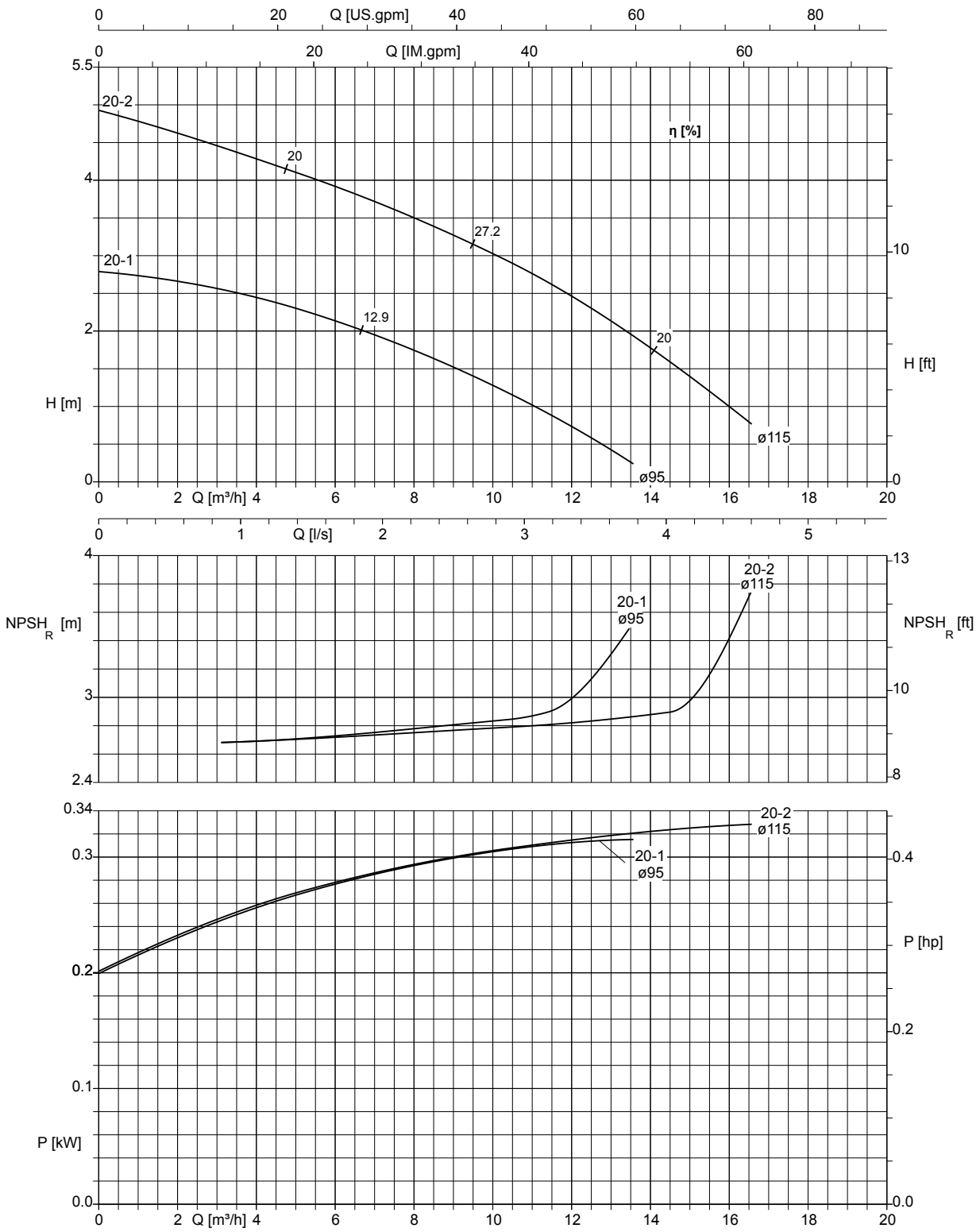

## Dimensions

### MK/MKA

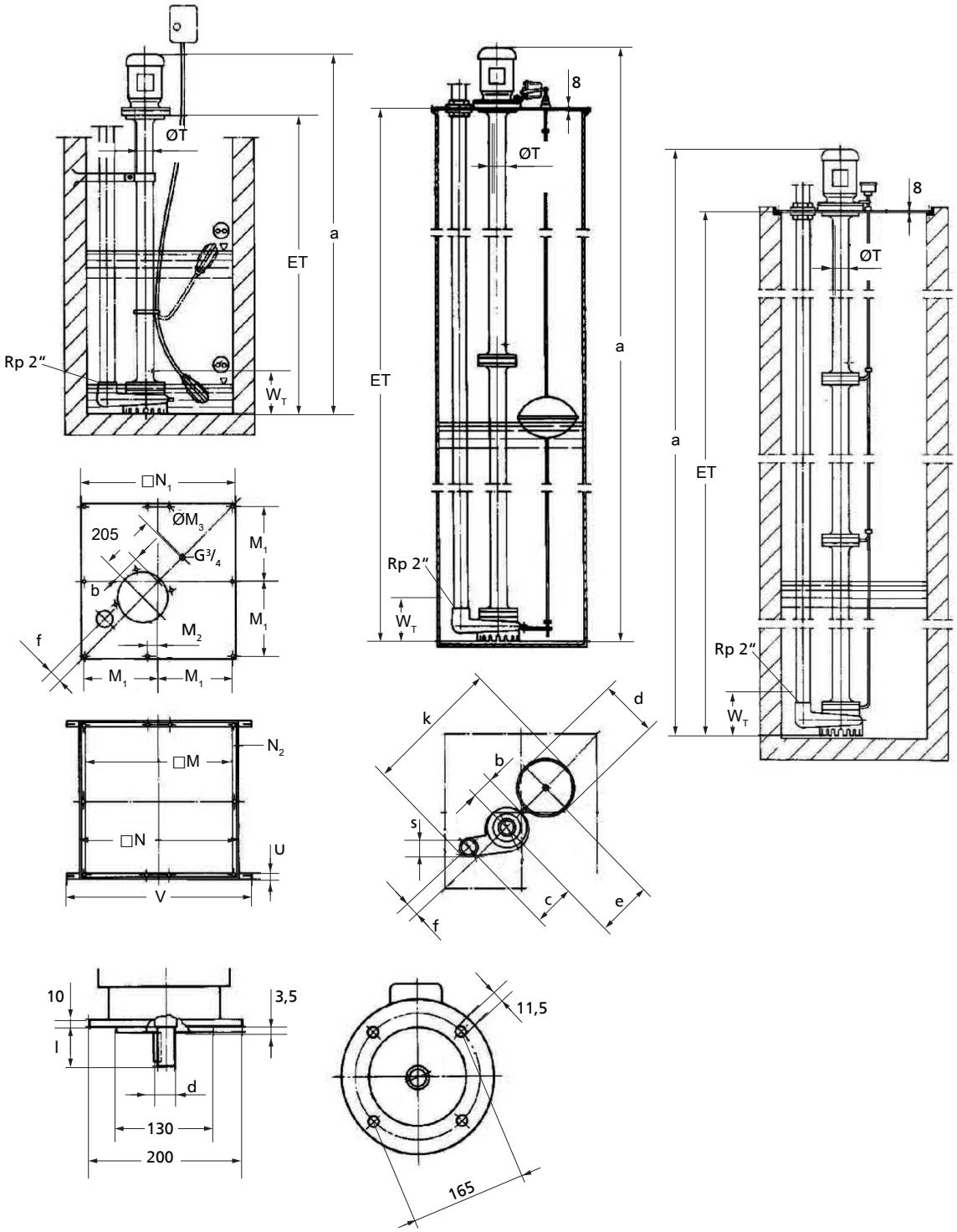


**Fig. 1:** Dimensions

| | |
|---|---|
| ET | Installation depth |
| $W_T$ | Minimum level of fluid handled |

Dimensions [mm]

| MK / MKA | ET | $W_T$ | a | b | c | d | e | f | k | □M | $M_1$ | $M_2$ | Ø$M_3$ | □N | □$N_1$ | $N_2$ | O | S | ØT | U | V |
|---|---|---|---|---|---|---|---|---|---|---|---|---|---|---|---|---|---|---|---|---|---|
| 20-/100 | 1004 | 110 | 1271 | 65 | 155 | 240 | 205 | 46 | 520 | 500 | 263 | 33 | 10 | 560 | 550 | 30×20×4 | 8 | 65 | 71 | 20 | 660 |
| 20-/190 | 1911 | 110 | 2178 | 65 | 155 | 240 | 205 | 46 | 520 | 500 | 263 | 33 | 10 | 560 | 550 | 30×20×4 | 8 | 65 | 71 | 20 | 660 |
| 20-/280 | 2818 | 110 | 3085 | 65 | 155 | 240 | 205 | 46 | 520 | 500 | 263 | 33 | 10 | 560 | 550 | 30×20×4 | 8 | 65 | 71 | 20 | 660 |

Dimensions of the shaft stub from the motor [mm]

| Motor | d | l |
|---|---|---|
| 80 | 19 | 40 |
| 90 L | 24 | 50 |
| 90 S | 24 | 50 |

## MKY

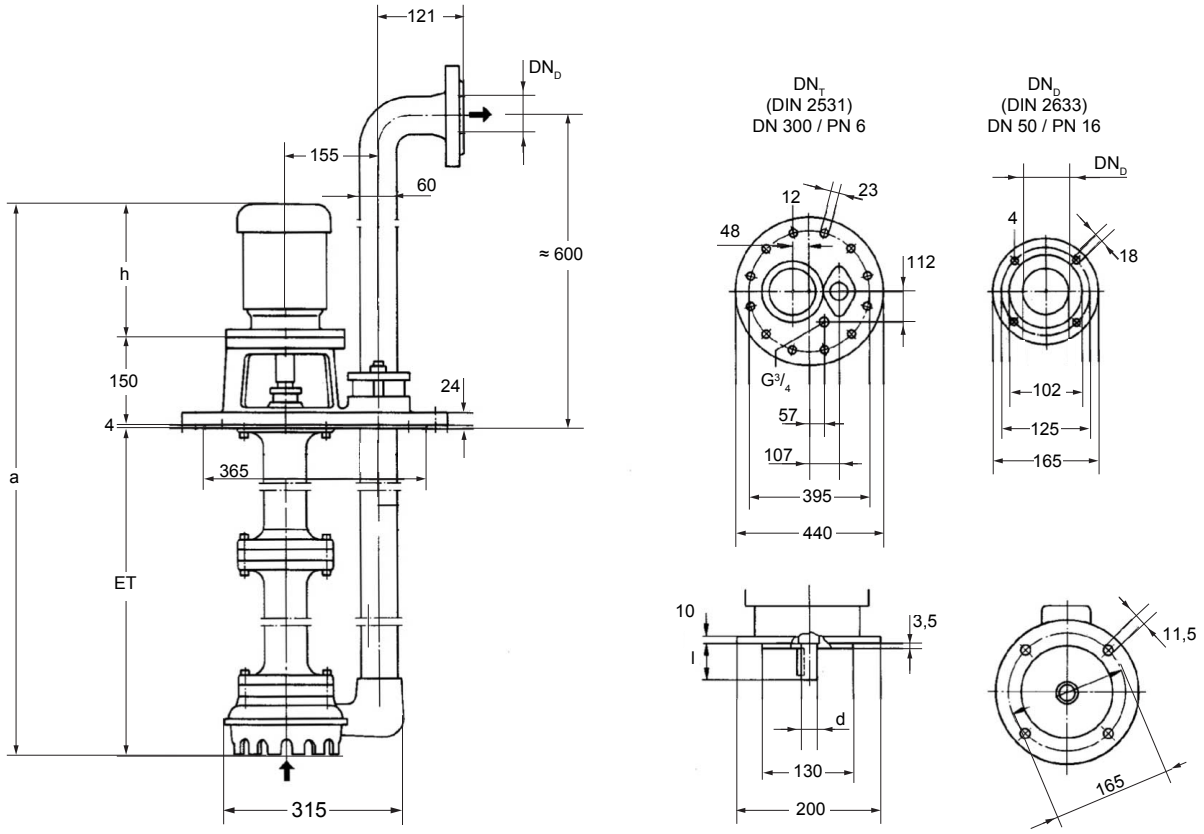


**Fig. 2:** Dimensions

| | |
|---|---|
| ET | Installation depth |

Dimensions [mm]

| MKY | ET | a[4)] | h[4)] |
|---|---|---|---|
| 20-1 - 4/100 | 1000 | 1381 | 227 |
| 20-1 - 4/190 | 1907 | 2288 | 227 |
| 20-1 - 4/280 | 2814 | 3195 | 227 |
| 20-5/100 | 1000 | 1397 | 243 |
| 20-5/190 | 1907 | 2304 | 243 |
| 20-5/280 | 2814 | 3211 | 243 |
| 20-6/100 | 1000 | 1422 | 268 |
| 20-6/190 | 1907 | 2399 | 268 |
| 20-6/280 | 2814 | 3236 | 268 |

4) Dimension depends on the motor make

Dimensions of the shaft stub from the motor [mm]

| Motor | d | l |
|---|---|---|
| 80 | 19 | 40 |
| 90 L | 24 | 50 |
| 90 S | 24 | 50 |

## Accessories

### Lubrication equipment (optional)

Technical data (⇨ Page 6)

| | Description | MK, MKA, MKY | | | | [kg] |
|---|---|---|---|---|---|---|
| | | MK | MKA | MKY | ... | |
| 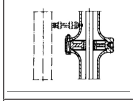 | Internal lubrication by fluid handled | - | - | - | 20-/100 | - |
| | | ✘ | ✘ | - | 20-/190 | 0,3 |
| | | ✘ | ✘ | - | 20-/280 | 0,3 |
| | Lubrication by external fluid | ✘ | ✘ | - | 20-/100 | 0,5 |
| | | ✘ | ✘ | - | 20-/190 | 0,6 |
| | | ✘ | ✘ | - | 20-/280 | 0,7 |
| 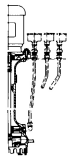 | Grease lubrication device | ✘ | ✘ | - | 20-/100 | 0,8 |
| | | ✘ | ✘ | - | 20-/190 | 0,9 |
| | | ✘ | ✘ | - | 20-/280 | 1 |

### Pump accessories

Technical data

| | Item | Description | Connection | Mat. No. | [kg] |
|---|---|---|---|---|---|
| | P10 | RK swing check valve<br><br>Plastic, EN 12 050-4, with internal thread ISO 7/1, full port and drain plug; cannot be used for pumped drainage | Rp 2 | 01009773 | 0,5 |
| | P10 | Swing check valve<br>ISO 7/1, made of gunmetal (225 °C max.) | Rp 2 | 00430260 | 2,5 |
| | P11 | Socket gate valve CuZn PN 10-12 DIN 3352<br><br>With internal thread / internal thread and full port | Rp 2 | 00411503 | 1,287 |

### Float switch

Technical data

| Item | Description | Type | MK | | | MKA | | | MKY | | | Mat. No. | [kg] |
|---|---|---|---|---|---|---|---|---|---|---|---|---|---|
| | | | 20- /100 | 20- /190 | 20- /280 | 20- /100 | 20- /190 | 20- /280 | 20- /100 | 20- /190 | 20- /280 | | |
| E1 | Magnetic float switch arrangement | MS 100 | ✘ | - | - | ✘ | - | - | ✘ | - | - | 11178906 | 0,8 |
| | | MSA 100 | ✘ | - | - | ✘ | - | - | ✘ | - | - | 11178907 | 0,8 |
| | | MS 190 | - | ✘ | - | - | ✘ | - | - | ✘ | - | 11178910 | 1,5 |
| | | MSA 190 | - | ✘ | - | - | ✘ | - | - | ✘ | - | 11178911 | 1,5 |
| E60 | Float switch with free cable end (NO contact) Switch housing made of polypropylene (max. fluid temperature 70 °C), circuit closed in upper float position, power cable (H07RN-F 3G1) | 5 | ✘ | ✘ | ✘ | ✘ | ✘ | ✘ | - | - | - | 11037743 | 0,8 |
| | | 10 | ✘ | ✘ | ✘ | ✘ | ✘ | ✘ | - | - | - | 11037744 | 1,3 |
| | | 20 | ✘ | ✘ | ✘ | ✘ | ✘ | ✘ | - | - | - | 11037746 | 2,4 |

## Control units and switchgear

Technical data

| Item | Description | Type | Motor, standard design | | | | | Mat. No. | [kg] |
|---|---|---|---|---|---|---|---|---|---|
| | | | $P_N$ [kW] | | | | | | |
| | | | 0,55 | 0,75 | 1,10 | 1,50 | 2,20 | | |
| E5 | Motor protection switchgear MSD | 16.1 | ✗ | - | - | - | - | 19070114 | 1 |
| | | 25.1 | - | ✗ | - | - | - | 19070115 | 1 |
| | | 40.1 | - | - | ✗ | ✗ | - | 19070116 | 1 |
| | | 60.1 | - | - | - | - | ✗ | 19070117 | 1 |
| E11 | Control unit for single-pump station LevelControl Basic 2 | BC1 400 DFNO 016 | ✗ | - | - | - | - | 19073761 | 4,5 |
| | | BC1 400 DFNO 025 | - | ✗ | - | - | - | 19073762 | 4,5 |
| | | BC1 400 DFNO 040 | - | - | ✗ | ✗ | - | 19073763 | 4,5 |
| | | BC1 400 DFNO 063 | - | - | - | - | ✗ | 19073764 | 4,5 |
| | LevelControl Basic 2 control unit for single-pump station<br>Level control via float switches<br>(Model with PTC data analysis relay) | BS1 400 DFNP 016 | ✗ | - | - | - | - | 5) | 10 |
| | | BS1 400 DFNP 025 | - | ✗ | - | - | - | 5) | 10 |
| | | BS1 400 DFNP 040 | - | - | ✗ | ✗ | - | 5) | 10 |
| | | BS1 400 DFNP 063 | - | - | - | - | ✗ | 5) | 10 |
| E31 | LevelControl Basic 2 control unit for dual-pump station | BC2 400 DFNO 016 | ✗ | - | - | - | - | 19073775 | 4,7 |
| | | BC2 400 DFNO 025 | - | ✗ | - | - | - | 19073776 | 4,7 |
| | | BC2 400 DFNO 040 | - | - | ✗ | ✗ | - | 19073777 | 4,7 |
| | | BC2 400 DFNO 063 | - | - | - | - | ✗ | 19073778 | 4,7 |
| | LevelControl Basic 2 control unit for dual-pump station<br>Level control via float switches<br>(Model with PTC data analysis relay) | BS2 400 DFNP 016 | ✗ | - | - | - | - | 5) | 14 |
| | | BS2 400 DFNP 025 | - | ✗ | - | - | - | 5) | 14 |
| | | BS2 400 DFNP 040 | - | - | ✗ | ✗ | - | 5) | 14 |
| | | BS2 400 DFNP 063 | - | - | - | - | ✗ | 5) | 14 |

5) Variants must be processed via KSB EasySelect.

## Alarm switchgears for pumps without ATEX

**Only valid for MK/MKA/MKY 20-1/20-2/20-3/20-4/20-5/20-6!**

AS 0/AS 1/AS 2/AS 4/AS 5

| Item | Description | Mat. No. | [kg] |
|---|---|---|---|
| E50 | Alarm switchgear AS 0<br><br>with circuit breaker, acoustic signal transmitter with 85 dB(A), green equipment-on lamp<br><br>Plastic housing, IP20, H × W × D = 140 × 80 × 57 [mm]. Use float switch, F1 leakage sensor (item E64), M1 alarm contactor or signal relay of control unit as contactor. | 29128401 | 0,5 |
| E51 | Alarm switchgear AS 2<br><br>With circuit breaker, acoustic signal transmitter with 85 dB(A), green equipment-on lamp, volt-free contact for hook-up to a control station<br><br>Plastic housing, IP20, H × W × D = 140 × 80 × 57 [mm]. Use float switch, F1 leakage sensor (item E64) or signal relay of control unit as contactor. | 29128422 | 0,5 |
| E52 | Alarm switchgear AS 4<br><br>with circuit breaker, acoustic signal transmitter with 85 dB(A), green equipment-on lamp, volt-free contact for hook-up to a control station, self-charging power supply unit for 5 hours of operation in the event of a power failure<br><br>Plastic housing, IP20, H × W × D = 140 × 80 × 57 [mm]. Use float switch (E60), F1 leakage sensor (item E64) or signal relay of control unit as contactor. | 29128442 | 0,5 |
| E53 | Alarm switchgear AS 5<br><br>Mains-independent, with self-charging power supply unit for 10 hours of operation in the event of a power failure, mains pilot LED, fault indicator light, horn-off pushbutton, volt-free contact for hook-up to a control station, ready for connection with 1.8 m power cable and plug.<br><br>ISO housing, IP41, H × W × D = 190 × 165 × 75 [mm]. Use float switch (E60) or signal relay of control unit as contactor. | 00530561 | 1,7 |
| E55 | Alarm switchgear AS 1<br><br>In IP30 ISO plug housing, mains-independent, with self-charging power supply unit for 5 hours of operation in the event of a power failure, acoustic signal transmitter 70 dB(A) with circuit breaker and integrated signal transmitter with 3-meter power cable, max. 60 °C, not suitable for steam and condensate.<br><br>1. High water alert by suspending the sensor in a (pump) sump above the pump start-up point.<br><br>2. Water alarm signal at a water level of only 1 mm, by placing the sensor on the floor in areas with a flooding or leakage risk, e.g. the cellar or next to the washing machine in the kitchen or bathroom. | 00533740 | 0,9 |

## LevelControl Basic 2

Technical data

| Item | Description | Mat. No. | [kg] |
|---|---|---|---|
| O1 | Master switch for LevelControl Basic 2 BC, fitted 3-pole, 20 A, lockable | 01143084 | 0,2 |
| O10 | Outdoor cabinet type 142 with base, for type BC<br>Internal dimensions H × W × D [mm]: 600 × 276 × 165 | 19071911 | 15 |
| E90 | Rechargeable battery retrofit kit for LevelControl Basic 2, BC<br>Scope of supply: 2 rechargeable batteries (6 V, 1.3 Ah) and charging unit<br>2 nos. 6V, 1.3 Ah | 19074194 | 0,8 |
| O200 | Signalling module for LevelControl Basic 2 BC | 19075182 | 0,2 |

## Control unit/switchgear accessories

Technical data

| Item | Description | Type | Mat. No. | [kg] |
|---|---|---|---|---|
| E64 | F1 leakage sensor<br>As contactor for alarm switchgears AS 0, AS 2 or AS 4, with 3-metre power cable, max. 40 °C, not suitable for steam and condensate. | | 19072366 | 0,2 |
| E70 | Horn, 12 V DC, 105 dB, 150 mA, IP54 | | 01086547 | 0,1 |
| E71 | Alarm combination (yellow alarm strobe light and piezo buzzer 92 dB), 12 V DC, 120 mA, IP65 | | 01139930 | 0,1 |
| E72 | Yellow alarm strobe light, 12 V DC, 195 mA, IP65 | | 01056355 | 0,3 |
| O45 | Plastic housing, IP65, for easier installation of alarm strobe light, for wall mounting | | 01061067 | 0,2 |

## General assembly drawings/exploded views with list of components

### MK, MKA

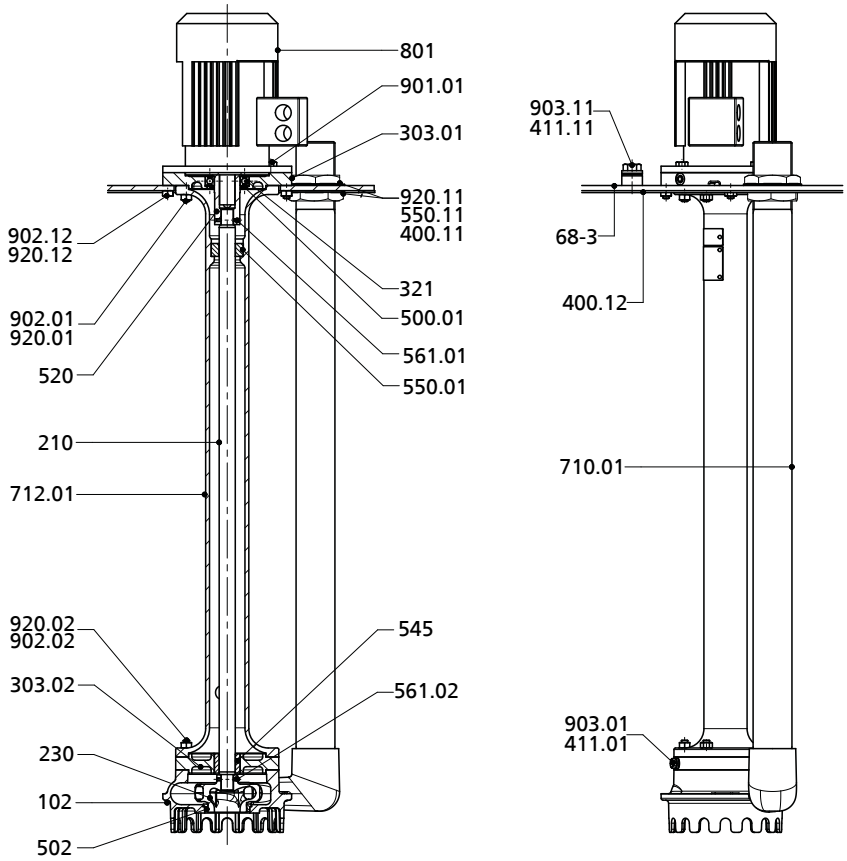


**Fig. 3:** Illustration of MK, MKA - installation depth 1000 mm

List of components

| Part No. | Description | Part No. | Description |
|---|---|---|---|
| 102 | Volute casing | 545 | Bearing bush |
| 210 | Shaft | 550.01/.11 | Disc |
| 230 | Impeller | 561.01/.02 | Grooved pin |
| 303.01 | Thrust and radial bearing | 68-3 | Cover plate |
| 303.02 | Thrust and radial bearing without vertical hole | 710.01 | Pipe |
| 321 | Radial ball bearing | 712.01 | Support column without hole |
| 400.11/.12 | Gasket | 801 | Flanged motor |
| 411.01/.11 | Joint ring | 901.01 | Hexagon head bolt |
| 500.01 | Ring | 902.01/.02/.12 | Stud |
| 502 | Casing wear ring | 903.01/.11 | Screw plug |
| 520 | Sleeve | 920.01/.02/.11/.12 | Nut |

## MK, MKA - grease-lubricated

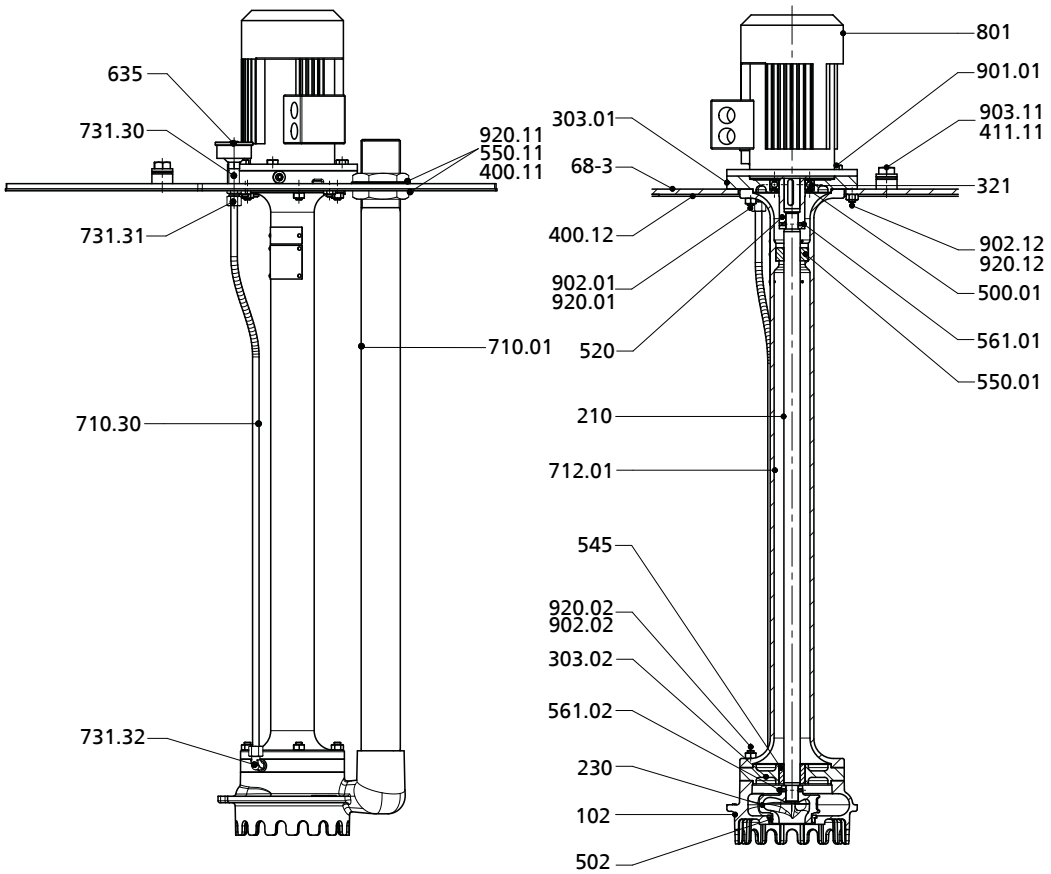


**Fig. 4:** Illustration of MK, MKA - installation depth 1000 mm, grease-lubricated

List of components

| Part No. | Description | Part No. | Description |
|---|---|---|---|
| 102 | Volute casing | 635 | Grease cup |
| 210 | Shaft | 68-3 | Cover plate |
| 230 | Impeller | 710.01 | Pipe |
| 303.01 | Thrust and radial bearing | 710.30 | Pipe |
| 303.02 | Thrust and radial bearing without vertical hole | 712.01[6)] | Support column without hole |
| 321 | Radial ball bearing | 731.30/.31/.32 | Pipe union |
| 400.11/.12 | Gasket | 801 | Flanged motor |
| 411.11 | Joint ring | 81-39 | Clamp |
| 500.01 | Ring | 81-45 | Float switch |
| 502 | Casing wear ring | 901.01 | Hexagon head bolt |
| 520 | Sleeve | 902.01/.02/.12 | Stud |
| 545 | Bearing bush | 903.11 | Screw plug |
| 550.01/.11 | Disc | 920.01/.02/.11/.12 | Nut |
| 561.01/.02 | Grooved pin | | |

6) Number of support columns 712 without hole, for installation depth ET: 1000 mm = 0; 1900 mm = 1; 2800 mm = 2

## MK, MKA - internally lubricated by fluid handled

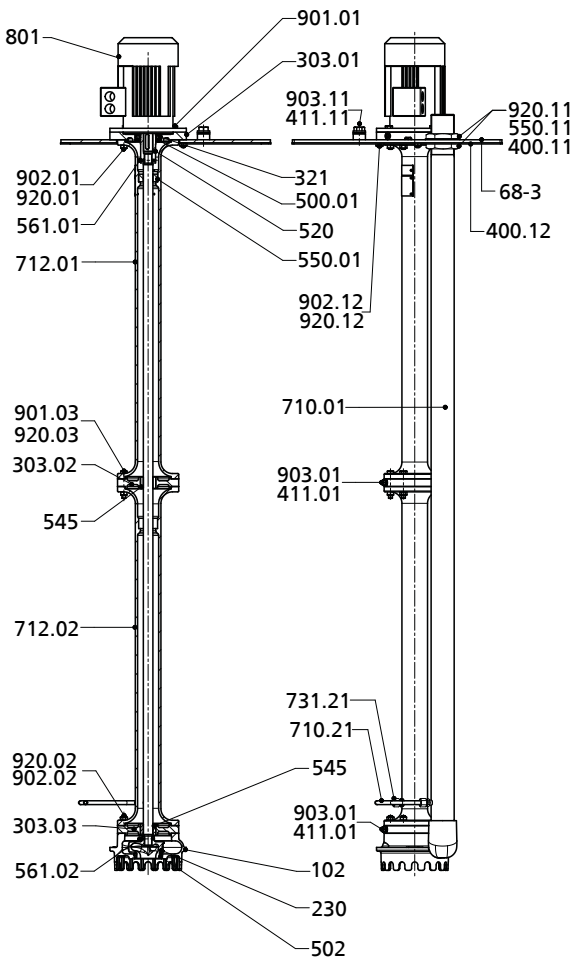


**Fig. 5:** Illustration of MK, MKA - installation depth 1900 mm, internally lubricated by fluid handled

List of components

| Part No. | Description | Part No. | Description |
|---|---|---|---|
| 102 | Volute casing | 561.01/.02 | Grooved pin |
| 230 | Impeller | 68-3 | Cover plate |
| 303.01 | Thrust and radial bearing | 710.01/.21 | Pipe |
| 303.02 | Thrust and radial bearing without vertical hole | 712.01/.02[7)] | Support column without hole |
| 303.03 | Thrust and radial bearing with vertical hole | 731.21 | Pipe union |
| 321 | Radial ball bearing | 801 | Flanged motor |
| 400.11/.12 | Gasket | 900.46 | Screw |
| 411.01/.11 | Joint ring | 901.01/.03 | Hexagon head bolt |
| 500.01 | Ring | 902.01/.02/.12 | Stud |
| 502 | Casing wear ring | 903.01/.11 | Screw plug |
| 520 | Sleeve | 920.01/.02/.03/.11/.12 | Nut |
| 545 | Bearing bush | 933.01 | Split pin |
| 550.11 | Disc | 99-3 | Set of accessories |

7) Number of support columns 712 without hole, for installation depth ET: 1000 mm = 0; 1900 mm = 1; 2800 mm = 2

## MK, MKA - lubricated by an external fluid

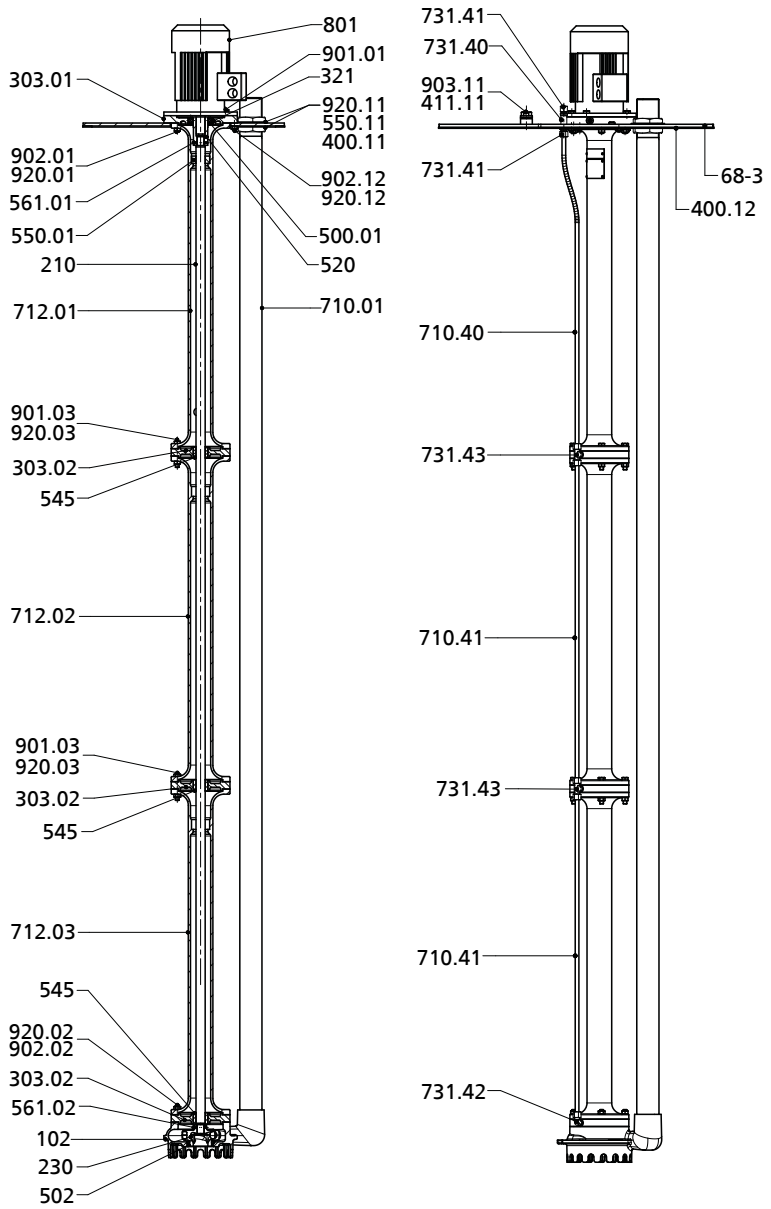


**Fig. 6:** Illustration of MK, MKA - installation depth 2800 mm, lubricated by an external fluid

List of components

| Part No. | Description | Part No. | Description |
|---|---|---|---|
| 102 | Volute casing | 550.01/.11 | Disc |
| 210 | Shaft | 561.01/.02 | Grooved pin |
| 230 | Impeller | 68-3 | Cover plate |
| 303.01 | Thrust and radial bearing | 710.01/.40/.41 | Pipe |
| 303.02 | Thrust and radial bearing without vertical hole | 712.01/.02/.03[8)] | Support column without hole |
| 321 | Radial ball bearing | 731.40/.41/.42/.43 | Pipe union |
| 400.11/.12 | Gasket | 801 | Flanged motor |
| 411.11 | Joint ring | 901.01/.03 | Hexagon head bolt |
| 500.01 | Ring | 902.01/.02/.12 | Stud |
| 502 | Casing wear ring | 903.11 | Screw plug |
| 520 | Sleeve | 920.01/.02/.03/.11/.12 | Nut |
| 545 | Bearing bush | | |

8) Number of support columns 712 without hole, for installation depth ET: 1000 mm = 0; 1900 mm = 1; 2800 mm = 2

## MKY

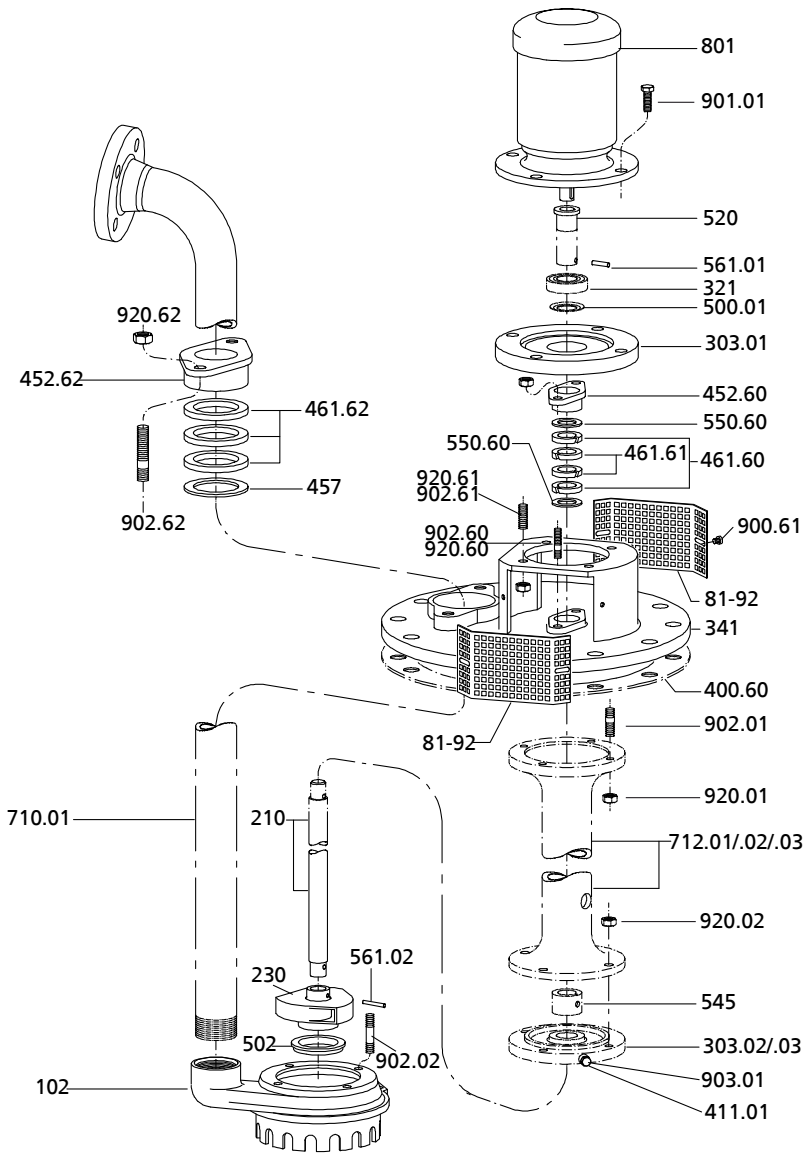


**Fig. 7:** MKY

List of components

| Part No. | Description | Part No. | Description |
|---|---|---|---|
| 102 | Volute casing | 520 | Sleeve |
| 210 | Shaft | 545 | Bearing bush |
| 230 | Impeller | 550.60 | Disc |
| 303.01 | Thrust and radial bearing | 561.01/.02 | Grooved pin |
| 303.02 | Thrust and radial bearing without vertical hole | 710.01 | Pipe |
| 303.03 | Thrust and radial bearing with vertical hole | 712.01 | Support column with hole |
| 321 | Radial ball bearing | 712.02/.03 | Support column without hole |
| 341 | Drive lantern | 801 | Flanged motor |
| 400.60 | Gasket | 81-92 | Cover plate |
| 411.01 | Joint ring | 900.61 | Screw |
| 452.60/.62 | Gland follower | 901.01 | Hexagon head bolt |
| 457 | Neck ring | 902.01/.02/.60/.61/.62 | Stud |
| 461.60/.61/.62 | Gland packing | 903.01 | Screw plug |
| 500.01 | Ring | 920.01/.02/.60/.61/.62 | Nut |
| 502 | Casing wear ring | | |

19/06/2019

2324.5/07-EN

LENNTECH
WATER TREATMENT SOLUTIONS
info@lenntech.com Tel. +31-152-610-900
www.lenntech.com Fax. +31-152-616-289