LENNTECH
WATER TREATMENT SOLUTIONS

Mag-drive Pump

Magnochem-Bloc

Type Series Booklet

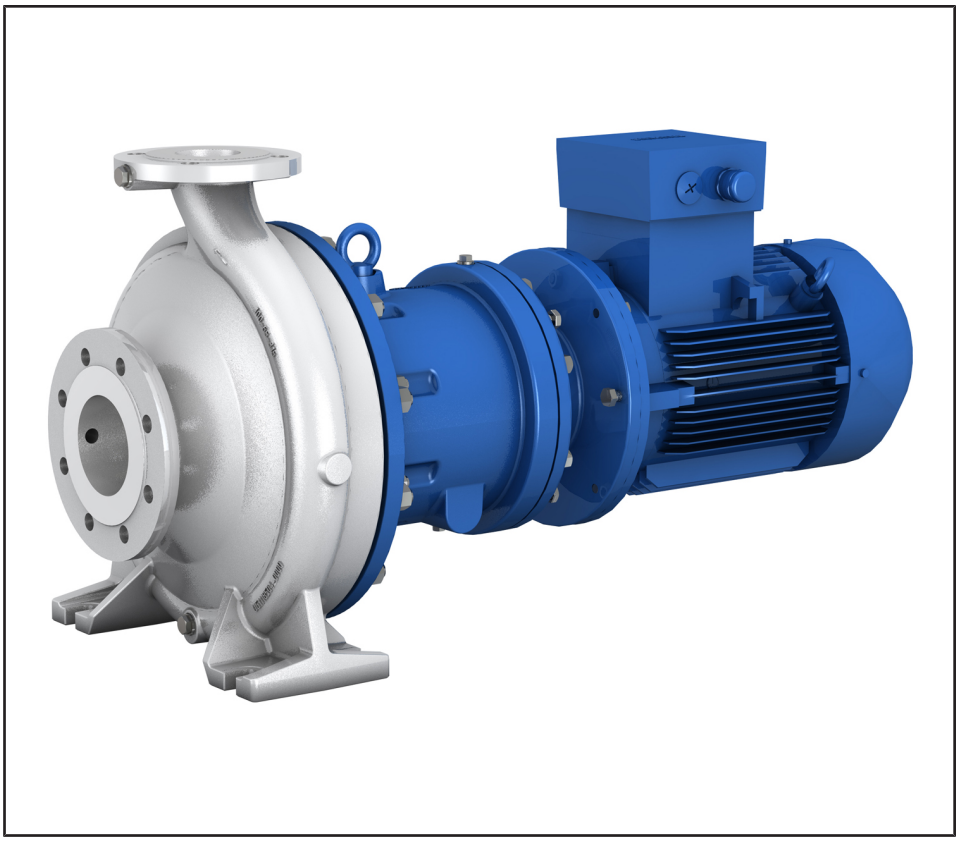

KSB

Legal information/Copyright

Type Series Booklet Magnochem-Bloc

All rights reserved. The contents provided herein must neither be distributed, copied, reproduced, edited or processed for any other purpose, nor otherwise transmitted, published or made available to a third party without the manufacturer's express written consent.

Subject to technical modification without prior notice.

© KSB SE & Co. KGaA, Frankenthal 01/10/2020

Contents

Seal-less Pumps **4**
Mag-drive Pumps 4
Magnochem-Bloc 4
Main applications 4
Fluids handled 4
Operating data 4
Design details 4
Designation 5
Materials 7
Coating and preservation 8
Product benefits 8
Product information as per Regulation No. 1907/2006 (REACH) 8
Acceptance tests and warranty 8
Pressure limits and temperature limits 9
Technical data 10
Selection charts 13
Dimensions and connections 19
Flange design 30
Scope of supply 30
Accessories 30
General assembly drawings 31

Seal-less Pumps

Mag-drive Pumps

Magnochem-Bloc

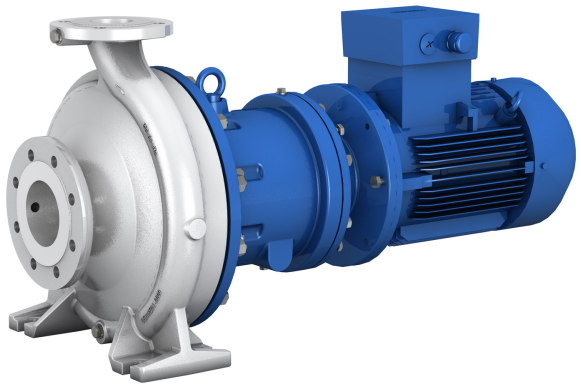

Main applications

- Chemical industry
- District heating
- Industrial recirculation systems
- Air-conditioning systems
- Condensate transport
- Cooling circuits
- Petrochemical industry
- Pipelines and tank farms
- Refinery
- Process engineering
- Hot-water heating systems
- Sugar industry

Fluids handled

- Aggressive fluids
- Explosive fluids
- Flammable fluids
- Toxic fluids
- Valuable fluids
- Fluids which are injurious to health
- Malodorous fluids

Operating data

Operating properties

Characteristic		Value	
		50 Hz	60 Hz
Flow rate	Q [m³/h]	≤ 625	≤ 754
Head	H [m]	≤ 162	≤ 236
Fluid temperature[1)]	T_1 [°C]	≥ -20	≥ -20
		≤ +200	≤ +200
Ambient temperature[1)]	T_2 [°C]	≥ -20	≥ -20
		≤ +40	≤ +40
Operating pressure	p [bar]	≤ 40	≤ 40

Design details

Design

- Volute casing pump
- Horizontal installation
- Vertical installation
- Close-coupled design
- Single-stage
- Technical requirements to ISO 5199
- Ratings to ISO 2858
  complemented by pumps of nominal diameters DN 25

Pump casing

- Single or double volute, depending on the pump size
- Radially split volute casing
- Volute casing with integrally cast pump feet
- Replaceable casing wear rings
- Heatable
- Draining facility

Impeller type

- Closed radial impeller with multiply curved vanes
- Discharge-side sealing clearance reduces axial thrust

Shaft seal

- Seal-less, with magnetic coupling
- Containment shroud as sealing element

Optional:

- Optional: with leakage barrier

Casing cover variants

- Internal circulation
- Low-boiling fluids
- External circulation
  - With fluid handled
  - With barrier fluid
- Dead-end configuration

2747.51/05-EN

1 Higher / lower values on request

In addition:

- Flushing connection
- Heatable
- Draining facility
- Internal ring filter or main flow filter

Bearings

Drive-end bearings:

- Shaft supported by motor

Pump-end bearing:

- Hydrodynamic plain bearings
- Product-lubricated

Automation

Automation options:

- PumpDrive
- PumpMeter

Designation

Designation example

Position																															
1	2	3	4	5	6	7	8	9	10	11	12	13	14	15	16	17	18	19	20	21	22	23	24	25	26	27	28	29	30	31	32
M	A	C	D	0	5	0	-	0	3	2	-	2	5	0	1	C	C	-	X	1	A	E	N	-	-	1	3	2	S	6	B
See name plate and data sheet																						See data sheet									

Designation key

Position	Code	Description	
1-4	Pump type		
	MACB	Magnochem-Bloc	
	MACD	Magnochem (long-coupled design)	
	MACW	Magnochem (long-coupled design with heat barrier)	
5-16	Size, e.g.		
	050	Nominal suction nozzle diameter [mm]	
	032	Nominal discharge nozzle diameter [mm]	
	2501	Nominal impeller diameter [mm]	
17	Pump casing material		
	C	Stainless steel	1.4408 / A743CF8M
	D	NORIDUR	1.4593 / 1.4517 / A995 CD4MCuN
	E	Cast steel	GP240GH + N / WCB
	V	Stainless steel	1.4408
	Y	Cast steel	1.7706
18	Impeller material		
	C	Stainless steel	1.4408 / A743CF8M
	D	NORIDUR	1.4593 / 1.4517 / A995 CD4MCuN
	G	Grey cast iron	JL 1040 / A48Cl.35
19	Heatable version		
	-[2]	Standard	
	H	Heatable casing	
20	Design		
	-[2]	Standard	
	E	Extended-flow hydraulic system	
	L	Standard-flow hydraulic system	
	X	Non-standard (BT3D, BT3)	
21	Magnetic coupling diameter [mm]		
	1	85	
	2	123	
	3	172	
	4	235	
	5	265	
22	Magnetic coupling length [mm]		
	A	10	
	B	20	
	C	30	

2 Blank

Position	Code	Description
22	D	40
	E	50
	F	60
	G	70
	H	80
	I	90
	J	100
	K	110
	L	120
	M	130
	N	140
	O	150
	P	160
	Q	170
23-26	Operating modes	
	EF--	External circulation with barrier fluid
	EN--	External circulation with fluid handled
	EP--	Dead-end configuration
	EP-H	Dead-end configuration, heatable
	IN--	Internal circulation
	IN-H	Internal circulation, heatable
	INR-	Internal circulation, ring filter
	INRH	Internal circulation, ring filter, heatable
	IP--	Low-boiling fluids
	IP-H	Low-boiling fluids, heatable
	IPR-	Low-boiling fluids, ring filter
	IPRH	Low-boiling fluids, ring filter, heatable
27-30	IEC motor frame size	
	090S	090S
	100L	100L
	112M	112M
	...	...
31	Number of motor poles	
32	Product generation	
	B	Magnochem Global Pump

2747.51/05-EN

Materials

Overview of available materials

Part. No.	Description	Material	Material variant S=standard, O=option										
			CC	CD	VC	VD	EG	EC	ED	YG	YC	YD	DD
102	Casing	Stainless steel 1.4408/ A743 Gr CF8 M	S	S	-	-	-	-	-	-	-	-	-
		Stainless steel 1.4408	-	-	S [3]	S[3]	-	-	-	-	-	-	-
		Duplex stainless steel 1.4593/1.4517/ A995 GR 1B	-	-	-	-	-	-	-	-	-	-	S
		Steel GP240GH+N/ A216 Gr WCB	-	-	-	-	S	S	S	-	-	-	-
		1.7706	-	-	-	-	-	-	-	S	S	S	-
132.01	Intermediate piece, containment shroud	Stainless steel 1.4408/ A743 GR CF8M	S	S	-	-	-	-	-	-	-	-	-
		Stainless steel 1.4408	-	-	S	S	-	-	-	-	-	-	-
		Steel GP240GH+N/ A216 Gr WCB	-	-	-	-	S	S	S	S	S	S	-
		Duplex stainless steel 1.4593/ 1.4517/A995 Gr CD4MCuN	-	-	-	-	-	-	-	-	-	-	S
132.03	Intermediate piece, motor	Steel GP240GH+N/ A216 Gr WCB	S	S	S	S	S	S	S	S	S	S	S
161	Casing cover	Stainless steel 1.4408/ A743 GR CF8M	S[4]	S[4]	-	-	-	-	-	-	-	-	-
		Stainless steel 1.4408	-	-	S[4]	S[4]	-	-	-	-	-	-	-
		Duplex stainless steel 1.4593/1.4517/A995 Gr CD4MCuN	-	-	-	-	-	-	-	-	-	-	S[4]
		Steel GP240GH+N/ A216 Gr WCB	-	-	-	-	S[4]	S[4]	S[4]	S[4]	S[4]	S[4]	-
23-2.02	Auxiliary impeller	CrNiMo St INT	S	S	S	S	S	S	S	S	S	S	-
210.03	Shaft (plain bearing)	Duplex stainless steel 1.4462/ UNS S31803	S	S	S	S	S	S	S	S	S	S	S
		1.4313+QT780/ A479 UNS S41500	O	O	O	O	O	O	O	O	O	O	-
230	Impeller	Stainless steel 1.4408/ A743 GR CF8M	S	-	S	-	-	S	-	-	S	-	-
		Grey cast iron EN-GJL-250/ A48 CL 35B	-	-	-	-	S	-	-	S	-	-	-
		Duplex stainless steel 1.4593/1.4517/A995 GR 1B	-	S	-	S	-	-	S	-	-	S	S
344	Bearing bracket lantern	Steel GP240GH+N/ A216 Gr WCB	S	S	S	S	S	S	S	S	S	S	S
386.01/ 386.02	Thrust bearing ring	SSiC	S	S	S	S	S	S	S	S	S	S	S
		SiC, DLC-coated	O	O	O	O	O	O	O	O	O	O	O
391.01	Bearing ring carrier	Stainless steel 1.4408/ A743 Gr CF8M	S	S	S	S	S	S	S	S	S	S	-
		Duplex stainless steel 1.4593/ 1.4517/A995 Gr CD4MCuN	-	-	-	-	-	-	-	-	-	-	S
411.10	Joint ring	CrNi steel/graphite	O	O	O	O	O	O	O	S	S	S	O
		Thermoplastic	S	S	S	S	S	S	S	-	-	-	S
		Gylon 3501E	O	O	O	O	O	O	O	-	-	-	O
502.01/ 502.02	Casing wear ring	Grey cast iron GG/cast iron	-	-	-	-	O	O	O	O	O	O	-
		CrNiMo steel	O	O	O	O	-	-	-	-	-	-	-
		Duplex steel	-	-	-	-	-	-	-	-	-	-	O
		CrNi steel VG 434	-	-	-	-	O	O	O	O	O	O	-
		None	S	S	S	S	S	S	S	S	S	S	S
503	Impeller wear ring	CrNiMo steel	O	-	O	-	-	O	-	-	O	-	-
		Stainless steel 1.4027+QT	-	-	-	-	O	-	-	O	-	-	-
		Duplex steel	-	O	-	O	-	-	O	-	-	O	O
		None	S	S	S	S	S	S	S	S	S	S	S

3 Heatable casing optionally available.
4 Heatable casing cover optionally available.

Part. No.	Description	Material	Material variant S=standard, O=option										
			CC	CD	VC	VD	EG	EC	ED	YG	YC	YD	DD
529.21/ 529.22	Bearing sleeve	SSiC	S	S	S	S	S	S	S	S	S	S	S
		SiC, DLC-coated	O	O	O	O	O	O	O	O	O	O	O
545.21/ 545.22	Bearing bush	SSiC	S	S	S	S	S	S	S	S	S	S	S
82-15	Containment shroud	1.4571-2.4610	S	S	S	S	S	S	S	S	S	S	-
		1.4462-2.4610	-	-	-	-	-	-	-	-	-	-	S
		Zirconium oxide	O	O	O	O	O	O	O	O	O	O	O
818.01	Inner rotor	1.4571-SAMCO	S	S	S	S	S	S	S	S	S	S	-
		1.4462-SAMCO	-	-	-	-	-	-	-	-	-	-	S
818.02	Outer rotor	ST-SAMCO	S	S	S	S	S	S	S	S	S	S	S
920.95	Impeller nut	A4/AISI 316	S	S	S	S	S	S	S	S	S	S	-
		Duplex stainless steel 1.4462/ UNS S31803	-	-	-	-	-	-	-	-	-	-	S
940.01	Key	1.4571+C/A276 TP316 COND B	S	S	S	S	S	S	S	S	S	S	-
		Duplex stainless steel 1.4462/ UNS S31803	-	-	-	-	-	-	-	-	-	-	S
Leakage barrier shaft seal ring													
184	Clamping ring	C45+N/ A108 UNS G10450	O	O	O	O	O[5]	O[5]	O[5]	-	-	-	O[5]
400.01	Gasket	Thermoplastic	O	O	O	O	O[5]	O[5]	O[5]	-	-	-	O[5]
412.28/. 97/.98	O-ring	FKM 80	O	O	O	O	O[5]	O[5]	O[5]	-	-	-	O[5]
420.97	Shaft seal ring	GYLON-MS	O	O	O	O	O[5]	O[5]	O[5]	-	-	-	O[5]
723.97	Flange	C45+N/ A108 UNS G10450	O	O	O	O	O[5]	O[5]	O[5]	-	-	-	O[5]

Coating and preservation

- Coating and preservation to KSB standard

Product benefits

- High operating reliability:
  - Only static seals are required.
  - Optional leakage barrier
  - Containment shroud protected by anti-rub feature on outer rotor and inner rotor
  - Self-draining facility of containment shroud
  - Pump does not need to be drained before drive unit is fitted/removed.
- Broad application range:
  - Product-lubricated plain bearings made of silicon carbide (DLC coating optionally available)
  - Modular design principle for hydraulic system and magnetic coupling
  - Large number of operating modes
  - Temperature maintenance and heating facility for casing and casing cover

Product information as per Regulation No. 1907/2006 (REACH)

For information as per chemicals Regulation (EC) No. 1907/2006 (REACH), see http://www.ksb.com/reach.

Acceptance tests and warranty

- Materials testing
  - Test report 2.2 on request
- Final inspection
  - Inspection certificate 3.1 to EN 10204 on request
- Hydraulic test

  The duty point of each pump is guaranteed according to ISO 9906/2A.

  The following acceptance tests can be performed and certified at extra charge:
  - Performance test to ISO 9906
  - NPSH test
- Other tests (e.g. vibrations, strength) on request.
- Warranty

  Warranties are given within the scope of the valid terms and conditions of sale and delivery.

2747.51/05-EN

5 Only applies up to PN16.

Pressure limits and temperature limits

Pressure limits and temperature limits of the hydraulic system

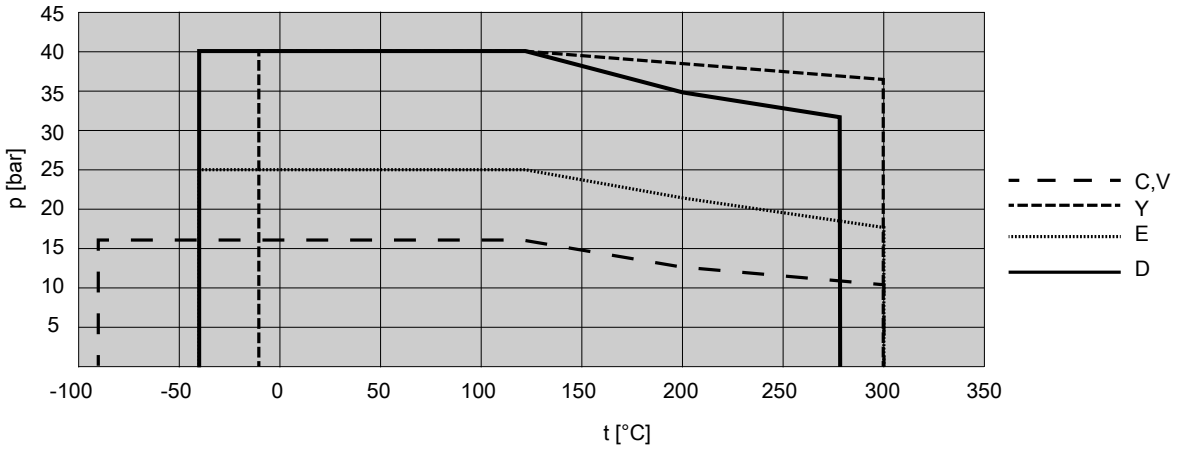

Fig. 1: Pressure limits and temperature limits of the hydraulic system

The pressure limits and temperature limits depend on the configuration.

Pressure limits and temperature limits of ASME flanges

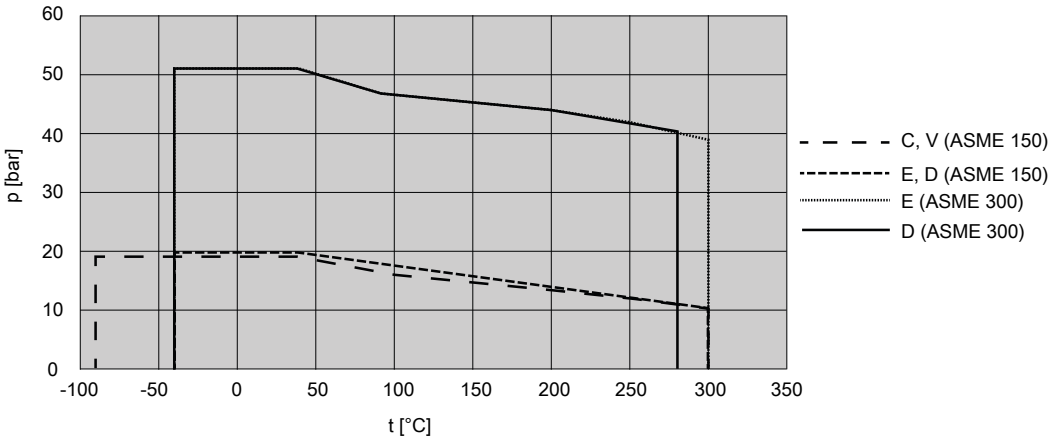

Fig. 2: Pressure limits and temperature limits of ASME flanges[6)]

On models with ASME flanges, the pressure limits and temperature limits are determined by the lowest value given in the "Pressure limits and temperature limits of the hydraulic system" diagram and the "Pressure and temperature limits of ASME flanges" diagram.

2747.51/05-EN

6 If material Y (ASME 300) is used, the pressure limits and temperature limits are higher than those stipulated for the hydraulic system.

Technical data

Technical data

Size	Bearing bracket	Impeller					Volute casing design[7]	Hydraulic system design[8]	Heatable casing	Heatable casing cover	Nominal diameter					
											85		123		172	
											Magnetic coupling length [mm]					
		Impeller outlet diameter	Free passage	Impeller inlet diameter	Impeller diameter						Min.	Max.	Min.	Max.	Min.	Max.
					Max.	Min.					10	60	10	70	10	100
		[mm]	[mm]	[mm]	[mm]	[mm]										
040-025-160	CS40	6	5,7	44	169	130	E	L	✗	✗	✗		✗		-	
040-025-200	CS40	6	5,7	44	209	160	E	L	-	✗	✗		✗		-	
050-032-125	CS40	10	5,7	63	139	110	E	E	✗	✗	✗		✗		-	
050-032-125.1	CS40	7	6,0	52	139	114	E	E	-	✗	✗		✗		-	
050-032-160	CS40	9	5,8	63	174	135	E	E	✗	✗	✗		✗		-	
050-032-160.1	CS40	6	5,4	52	170	138	E	L	✗	✗	✗		✗		-	
050-032-200	CS40	7	6,7	62	209	178	E	E	✗	✗	✗		✗		-	
050-032-200.1	CS40	6	5,3	54	204	138	E	E	✗	✗	✗		✗		-	
050-032-250	CS50	8	7,1	63	261	212	E	E	✗	✗	✗		✗		✗	
050-032-250.1	CS50	6	5,2	58	254	220	E	E	✗	✗	✗		✗		✗	
065-040-125	CS40	14	9,6	74	139	110	E	E	-	✗	✗		✗		-	
065-040-160	CS40	13	11,5	70	174	135	E	E	✗	✗	✗		✗		-	
065-040-160.1	CS40	9	8,5	65	169	130	E	L	-	✗	✗		✗		-	
065-040-200	CS40	9	8,9	69	209	175	E	E	✗	✗	✗		✗		-	
065-040-200.1	CS40	7	6,6	65	209	160	E	L	-	✗	✗		✗		-	
065-040-250	CS50	8	8,0	73	260	214	E	E	✗	✗	✗		✗		✗	
065-040-250.1	CS50	7	6,6	68	260	200	E	L	✗	✗	✗		✗		✗	
065-040-315	CS50	8	7,1	75	326	278	E	E	✗	✗	✗		✗		✗	
080-050-125	CS40	20	11,6	88	142	114	E	E	-	✗	✗		✗		-	
080-050-160	CS40	17	11,6	87	174	135	E	E	✗	✗	✗		✗		-	
080-050-160.1	CS40	15	9	82	169	130	E	L	-	✗	✗		✗		-	
080-050-200	CS40	14	11,9	83	219	180	E	E	✗	✗	✗		✗		-	
080-050-200.1	CS40	12	6,7	82	209	160	E	L	-	✗	✗		✗		-	
080-050-250	CS50	11	10,0	84	260	220	E	E	✗	✗	✗		✗		✗	
080-050-250.1	CS50	10	7,0	85	260	200	E	L	-	✗	✗		✗		✗	
080-050-315	CS50	10	9,5	86	323	270	E	E	✗	✗	✗		✗		✗	
080-050-315.1	CS50	8	7,6	85	320	260	E	L	✗	✗	✗		✗		✗	
100-065-125	CS40	26	12,9	99	141	114	E	L	-	✗	✗		✗		-	
100-065-160	CS50	21	12,2	92	174	132	E	L	-	✗	✗		✗		✗	
100-065-200	CS50	17	13,3	100	219	180	E	L	✗	✗	✗		✗		✗	
100-065-250	CS50	15	14,3	101	260	220	E	L	-	✗	✗		✗		✗	
100-065-315	CS60	14	13	107	320	270	E	E	-	✗	✗		✗		✗	
125-080-160	CS50	32	15,1	124	174	122	E	E	-	✗	✗		✗		✗	
125-080-200	CS50	25	15,2	115	219	180	D	L	✗	✗	✗		✗		✗	
125-080-200.1	CS50	22	11,9	116	209	140	D	L	-	✗	✗		✗		✗	
125-080-250	CS50	19	15,8	115	269	220	D	L	✗	✗	✗		✗		✗	
125-080-315	CS60	19	17,8	115	334	281	D	L	✗	✗	✗		✗		✗	
125-080-400	CS60	15	14,3	129	398	330	E	E	✗	✗	✗		✗		✗	
125-100-160	CS50	38	16,4	135	185	155	E	L	-	✗	✗		✗		✗	
125-100-200	CS50	33	17,9	142	219	179	D	L	-	✗	✗		✗		✗	
125-100-250	CS60	27	18,8	145	262	216	D	L	✗	✗	✗		✗		✗	
125-100-315	CS60	23	19,9	142	334	280	D	E	-	✗	✗		✗		✗	
125-100-400	CS60	18	17,1	142	401	329	E	E	-	✗	✗		✗		✗	
150-125-200	CS60	41	21,1	160	224	162	D	L	-	✗	✗		✗		✗	
150-125-250	CS60	37	22,4	162	269	218	E	E	-	✗	✗		✗		✗	
150-125-315	CS60	31	22,6	162	334	280	D	E	✗	✗	✗		✗		✗	

7 E = single volute, D = double volute
8 E = extended-flow hydraulic system, L = standard-flow hydraulic system

2747.51/05-EN

Size	Bearing bracket	Impeller					Volute casing design[7]	Hydraulic system design[8]	Heatable casing	Heatable casing cover	Nominal diameter					
		Impeller outlet diameter	Free passage	Impeller inlet diameter	Impeller diameter						85		123		172	
											Magnetic coupling length [mm]					
											Min.	Max.	Min.	Max.	Min.	Max.
					Max.	Min.					10	60	10	70	10	100
		[mm]	[mm]	[mm]	[mm]	[mm]										
150-125-400	CS60	26	20,9	162	419	330	D	E	✗	✗	✗		✗		✗	
200-150-200	CS60	60	25,2	179	224	158	E	-	-	✗	✗		✗		✗	
200-150-250	CS60	49	23,0	191	269	220	E	L	✗	✗	✗		✗		✗	

Weight

Weight of pump [kg][9]

Size	Bearing bracket	Motor									
		90S 90L	100L 112M	132S 132M	160M 160L 180M 180L	200	225M, 2 poles	225S, 4-6 poles 225M, 4-6 poles	250M, 2 poles	250M, 4-6-poles 280S, 2 poles 280M, 2 poles	280S, 4-6 poles 280M, 4-6 poles
040-025-160	CS40	68	79	83	-	-	-	-	-	-	-
040-025-200	CS40	81	92	95	100	-	-	-	-	-	-
050-032-125	CS40	65	76	80	-	-	-	-	-	-	-
050-032-125.1	CS40	65	77	80	-	-	-	-	-	-	-
050-032-160	CS40	68	79	82	-	-	-	-	-	-	-
050-032-160.1	CS40	68	80	83	-	-	-	-	-	-	-
050-032-200	CS40	81	93	96	99	-	-	-	-	-	-
050-032-200.1	CS40	82	93	97	100	-	-	-	-	-	-
050-032-250	CS50	125	138	164	170	185	193	194	207	207	208
050-032-250.1	CS50	125	138	164	170	185	193	194	207	207	208
065-040-125	CS40	66	78	81	-	-	-	-	-	-	-
065-040-160.1	CS40	72	83	87	-	-	-	-	-	-	-
065-040-160	CS40	70	81	85	-	-	-	-	-	-	-
065-040-200	CS40	83	95	98	104	-	-	-	-	-	-
065-040-200.1	CS40	86	98	101	107	-	-	-	-	-	-
065-040-250	CS50	126	139	165	171	186	194	195	208	208	209
065-040-250.1	CS50	125	137	164	169	185	193	194	207	207	208
065-040-315	CS50	161	173	200	205	219	227	228	241	241	242
080-050-125	CS40	71	83	86	-	-	-	-	-	-	-
080-050-160	CS40	73	84	88	92	-	-	-	-	-	-
080-050-160.1	CS40	77	88	92	96	-	-	-	-	-	-
080-050-200	CS40	86	97	101	105	-	-	-	-	-	-
080-050-200.1	CS40	87	98	102	106	-	-	-	-	-	-
080-050-250	CS50	129	142	168	174	189	197	198	211	211	212
080-050-250.1	CS50	133	146	172	178	193	201	202	215	215	216
080-050-315	CS50	166	178	205	210	223	231	232	245	245	246
080-050-315.1	CS50	160	172	198	204	217	225	226	239	239	240
100-065-125	CS40	76	88	91	96	-	-	-	-	-	-
100-065-160	CS50	119	133	160	165	179	187	188	201	201	202
100-065-200	CS50	119	134	160	166	179	187	188	201	201	202
100-065-250	CS50	141	154	180	186	201	209	210	223	223	224
100-065-315	CS60	170	183	209	215	230	238	239	252	252	253
125-080-160	CS50	122	136	163	168	182	190	191	204	204	205
125-080-200	CS50	135	147	174	180	194	202	203	216	216	217
125-080-200.1	CS50	136	148	175	181	195	203	204	217	217	218
125-080-250	CS50	160	172	198	204	219	227	228	241	241	242

9 The weight data applies to a pump of max. possible length and with the largest magnetic coupling diameter. The weight data only applies to unheated models without motor.

Size	Bearing bracket	Motor									
		90S 90L	100L 112M	132S 132M	160M 160L 180M 180L	200	225M, 2 poles	225S, 4-6 poles 225M, 4-6 poles	250M, 2 poles	250M, 4-6-poles 280S, 2 poles 280M, 2 poles	280S, 4-6 poles 280M, 4-6 poles
125-080-315	CS60	195	207	234	239	254	262	263	276	276	277
125-080-400	CS60	218	231	258	263	291	299	300	313	313	314
125-100-160	CS50	137	151	178	183	197	205	206	219	219	220
125-100-200	CS50	148	160	186	192	207	215	216	229	229	230
125-100-250	CS60	170	182	208	214	228	236	237	250	250	251
125-100-315	CS60	204	217	243	249	263	271	272	285	285	286
125-100-400	CS60	227	245	272	277	287	295	296	309	309	310
150-125-200	CS60	171	183	209	215	230	238	239	252	252	253
150-125-250	CS60	173	186	212	218	233	241	242	255	255	256
150-125-315	CS60	236	248	275	280	295	303	304	317	317	318
150-125-400	CS60	290	302	329	334	349	357	358	371	371	372
200-150-200	CS60	207	219	246	251	267	275	276	289	289	290
200-150-250	CS60	200	213	239	245	260	268	269	282	282	283

Motor weight

Motor	Weight[10] [kg]
90S	13
90L	16
100L	24
112M	29
132S	39
132M	53
160M	74
160L	90
180M	165
180L	180
200L	240
225S	300
225M	330
250M	435
280S	640
280M	660

2747.51/05-EN

10 Weight applies to a 4-pole standard Siemens motor

Selection charts

Magnochem-Bloc, n = 2900 rpm

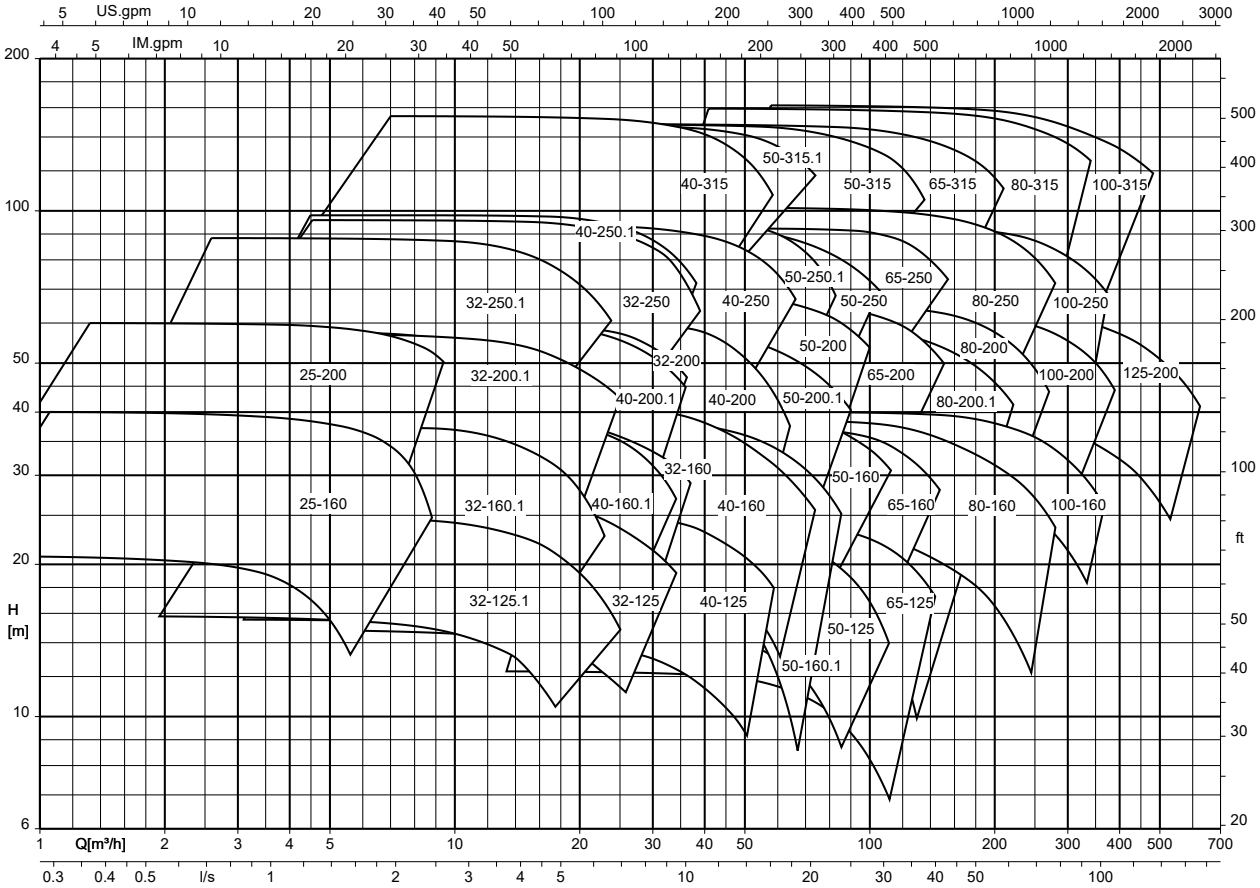

The following sizes are **only** available in the countries indicated:

- Europe: 040-200.1, 050-160.1, 050-200.1, 050-250.1, 080-200.1

Magnochem-Bloc, n = 1450 rpm

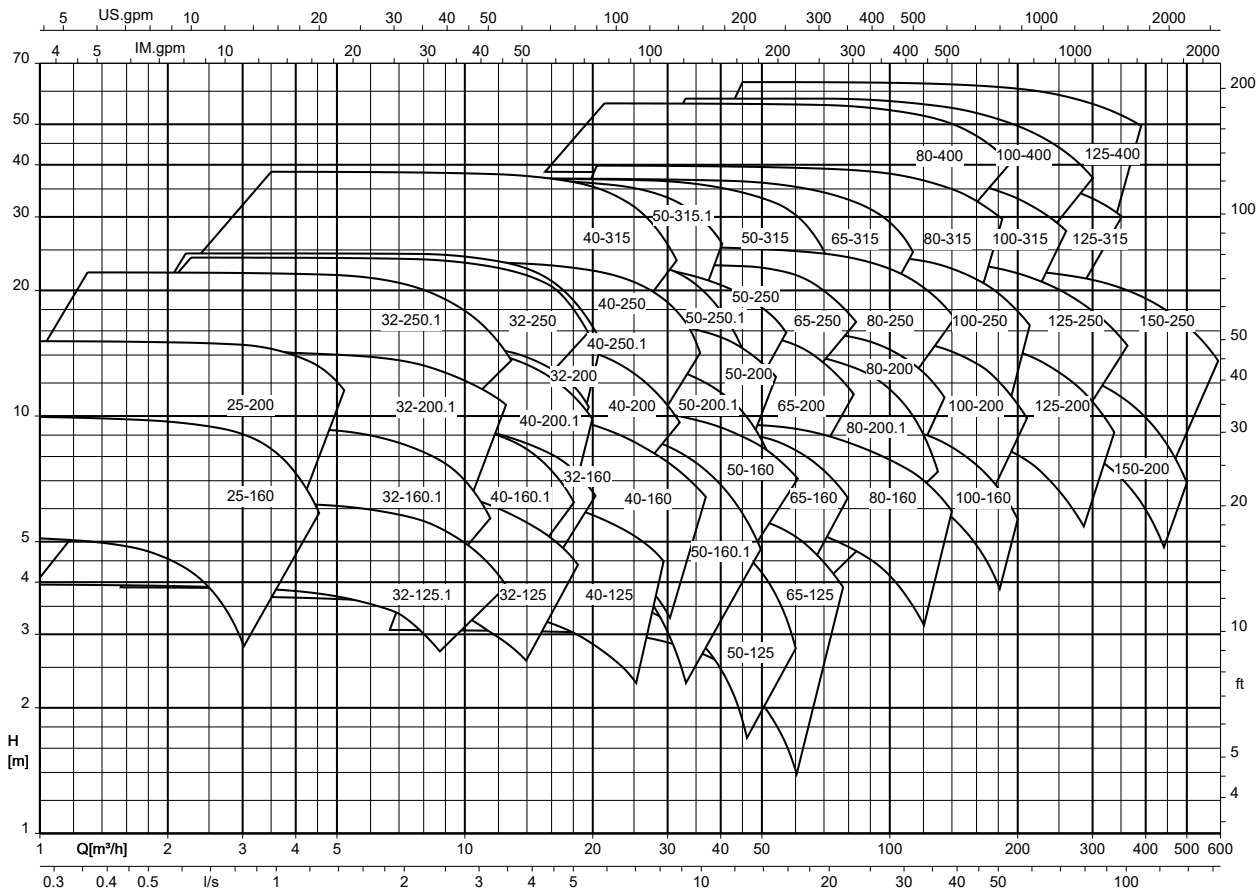

The following sizes are **only** available in the countries indicated:

- Europe: 040-200.1, 050-160.1, 050-200.1, 050-250.1, 080-200.1

Magnochem-Bloc, n = 960 rpm

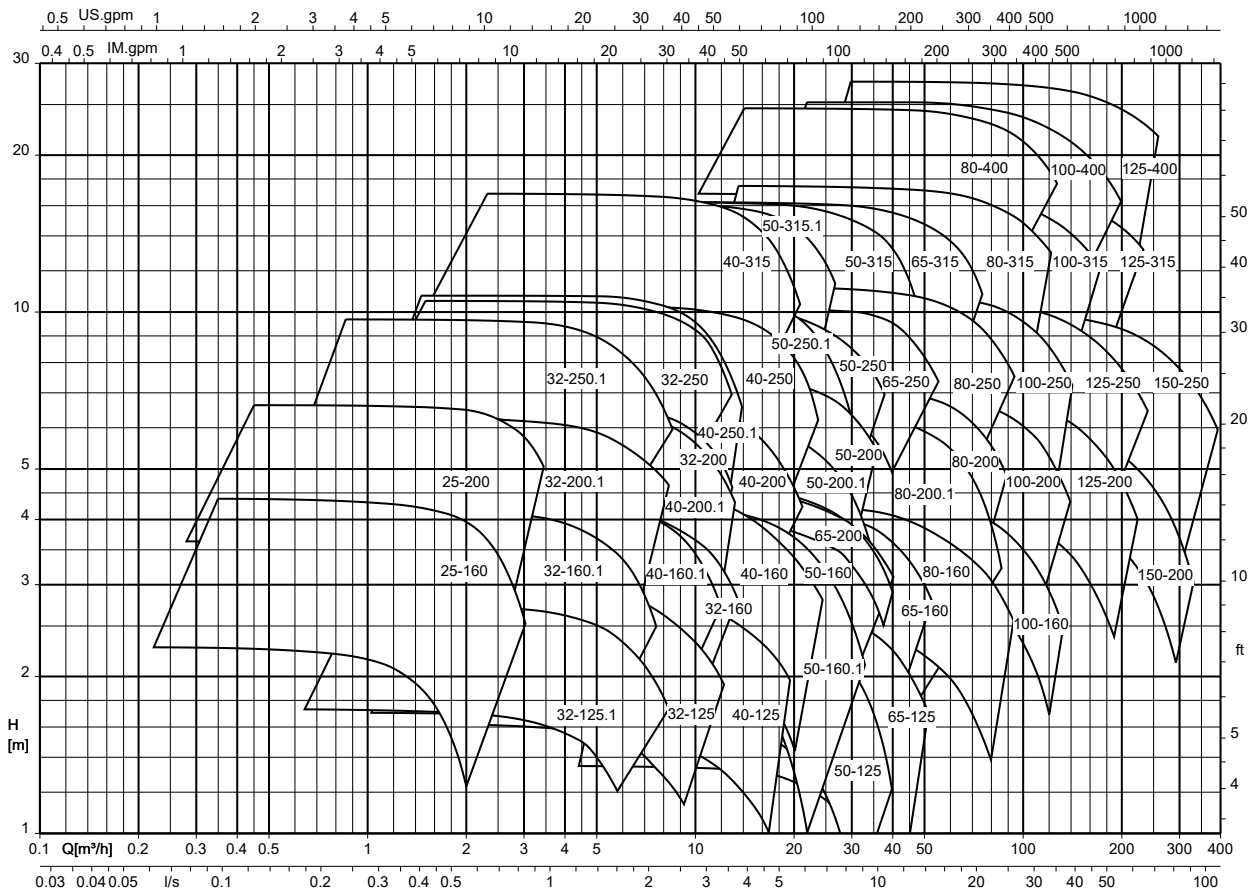

The following sizes are **only** available in the countries indicated:

- Europe: 040-200.1, 050-160.1, 050-200.1, 050-250.1, 080-200.1

Magnochem-Bloc, n = 3500 rpm

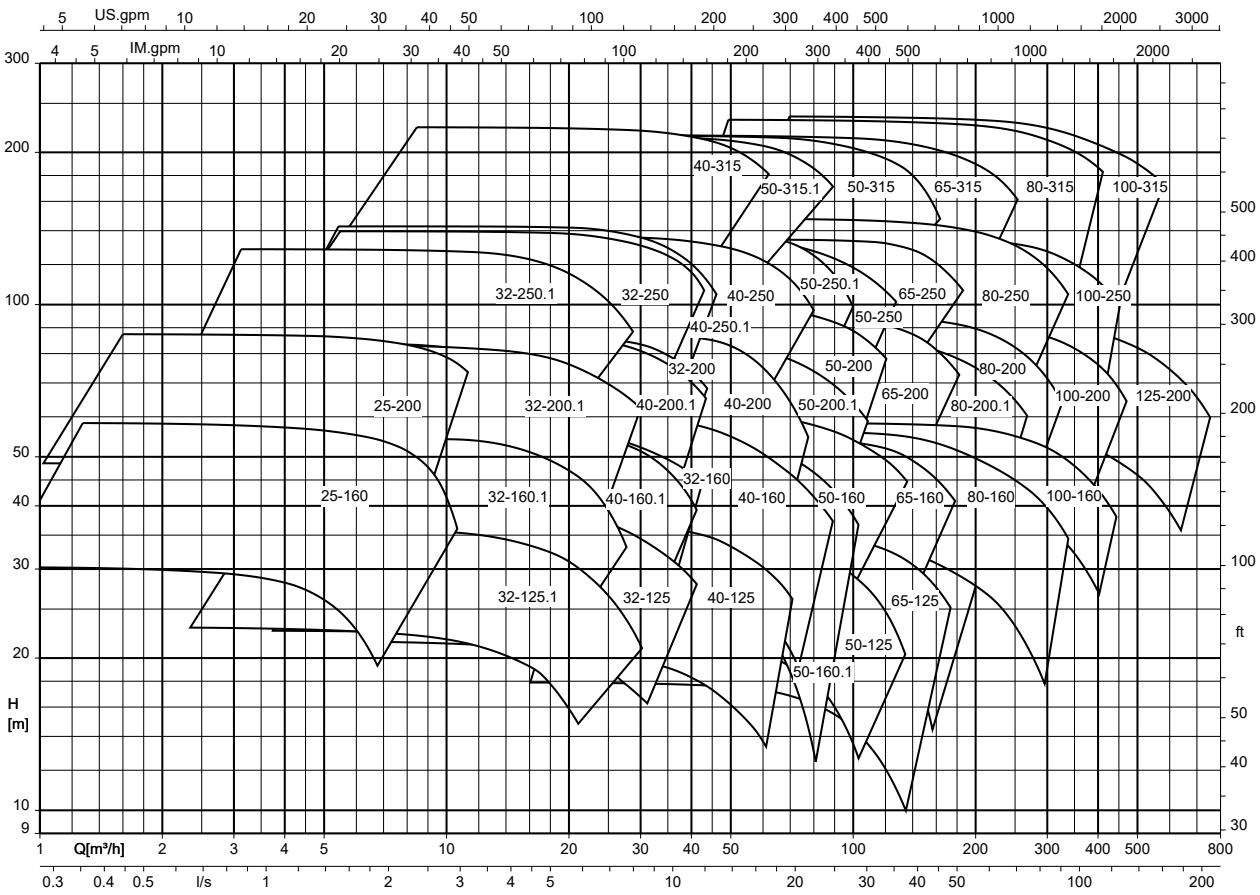

The following sizes are **only** available in the countries indicated:

- Europe: 040-200.1, 050-160.1, 050-200.1, 050-250.1, 080-200.1

Magnochem-Bloc, n = 1750 rpm

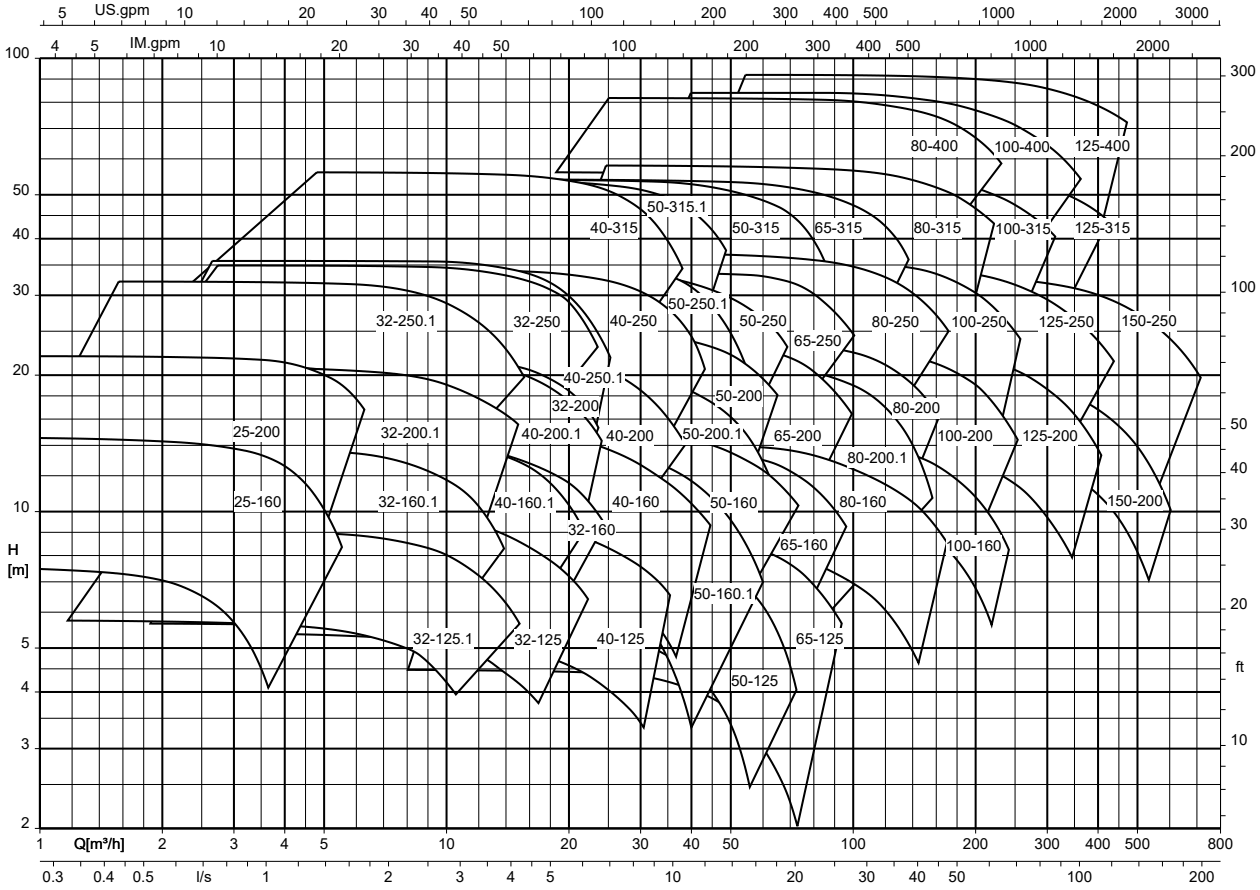

The following sizes are **only** available in the countries indicated:

- Europe: 040-200.1, 050-160.1, 050-200.1, 050-250.1, 080-200.1

Magnochem-Bloc, n = 1160 rpm

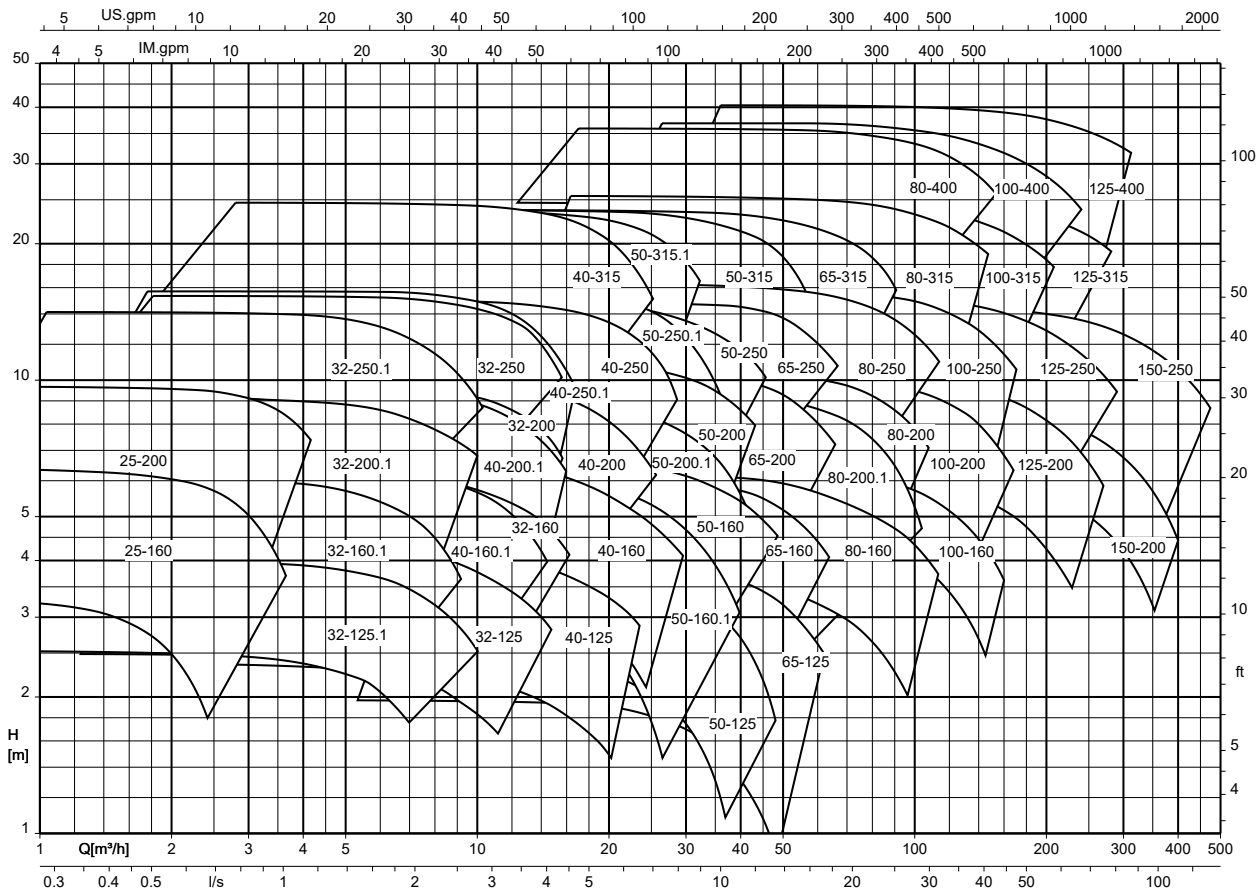

The following sizes are **only** available in the countries indicated:

- Europe: 040-200.1, 050-160.1, 050-200.1, 050-250.1, 080-200.1

Dimensions and connections

Dimensions of the pump set

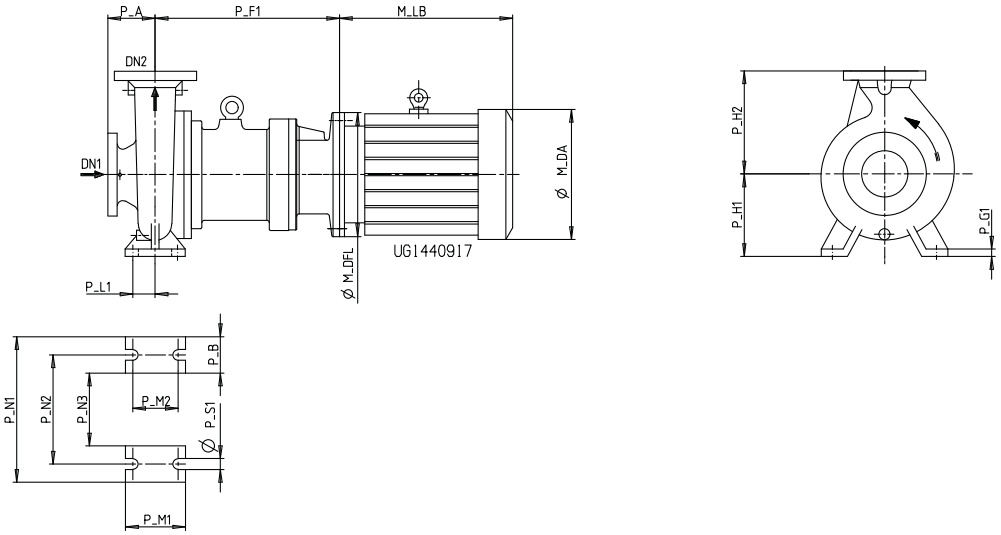

Fig. 3: Dimensions for installation without mounting plate and without support foot

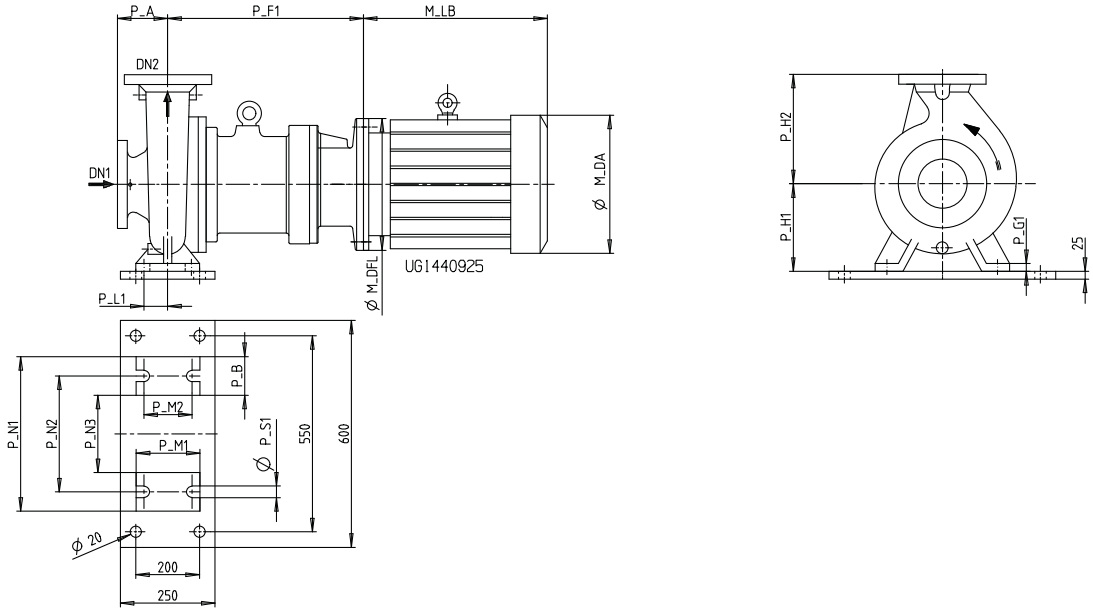

Fig. 4: Dimensions for installation with mounting plate and without support foot

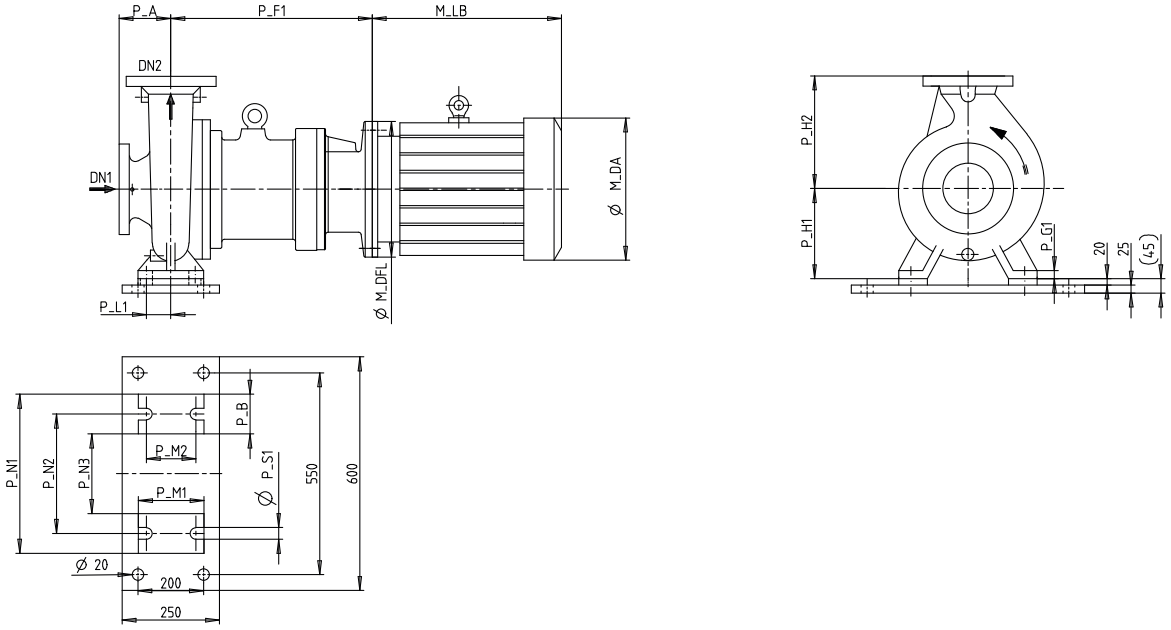

Fig. 5: Dimensions for installation with mounting plate and shims, without support foot

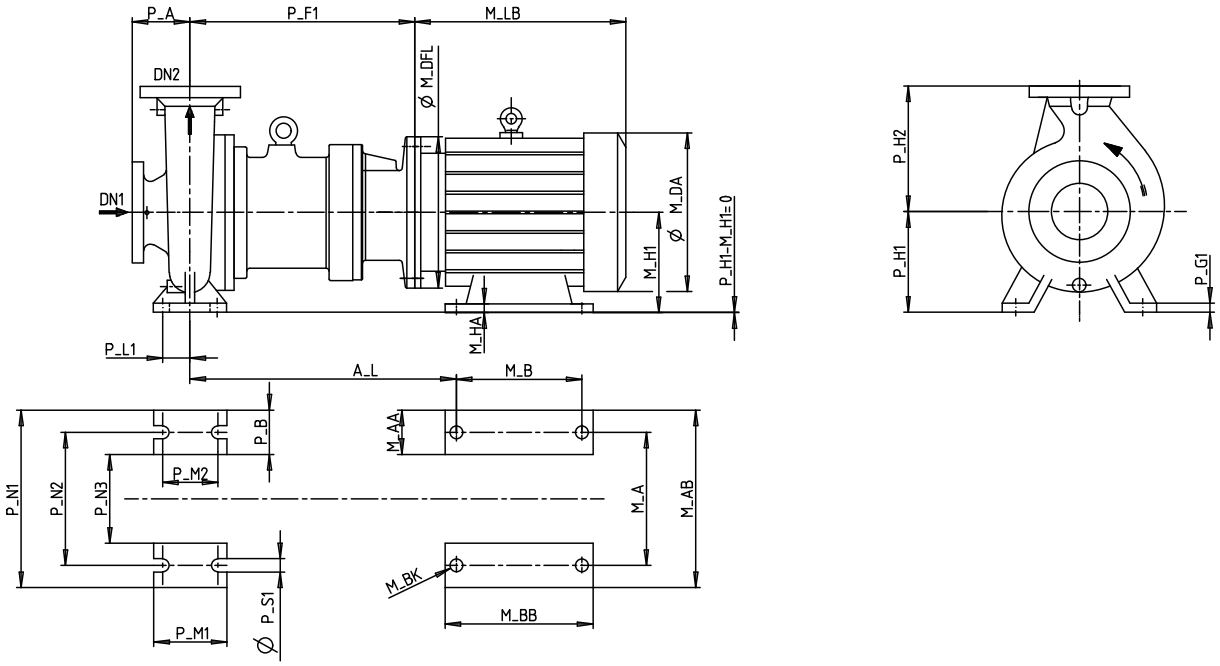

Fig. 6: Dimensions for installation on pump feet and motor feet P_H1-M_H1 = 0

2747.51/05-EN

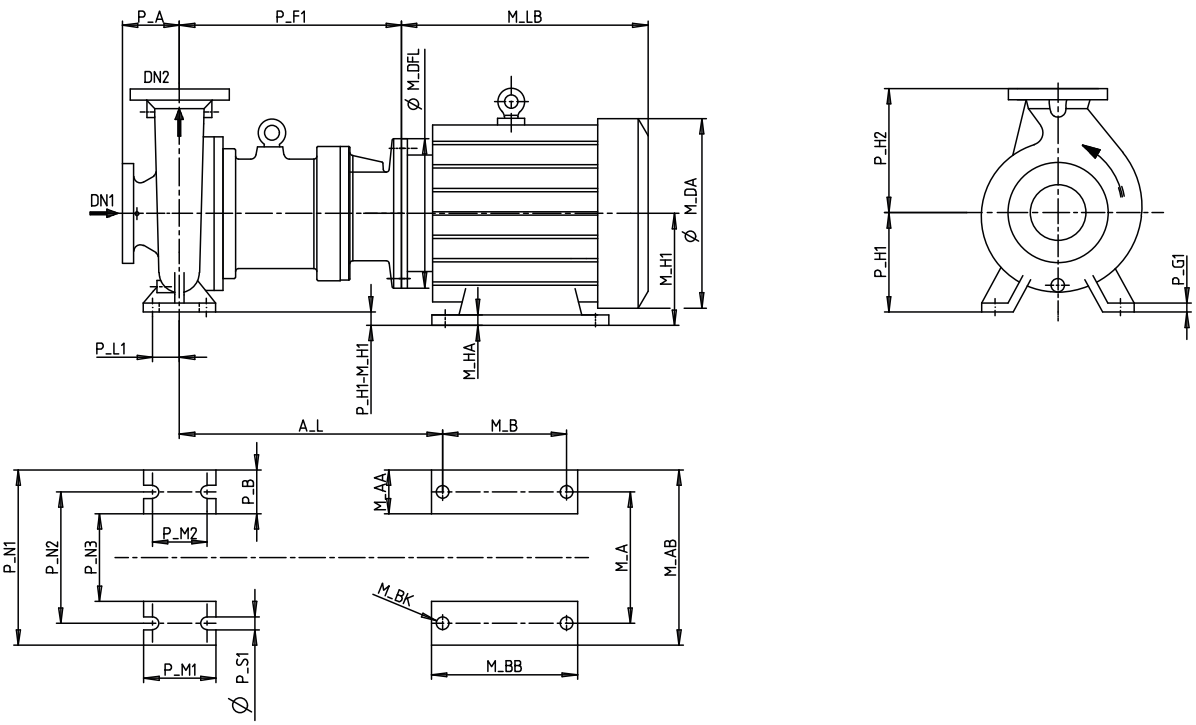

Fig. 7: Dimensions for installation on pump feet and motor feet P_H1<M_H1

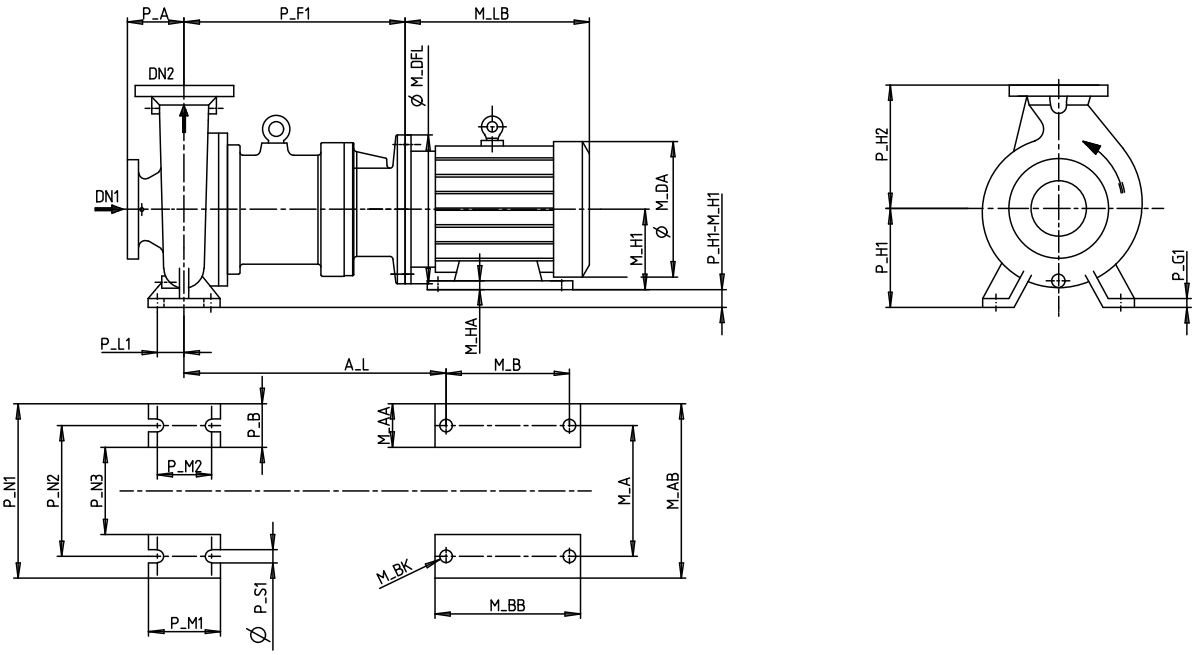

Fig. 8: Dimensions for installation on pump feet and motor feet P_H1>M_H1

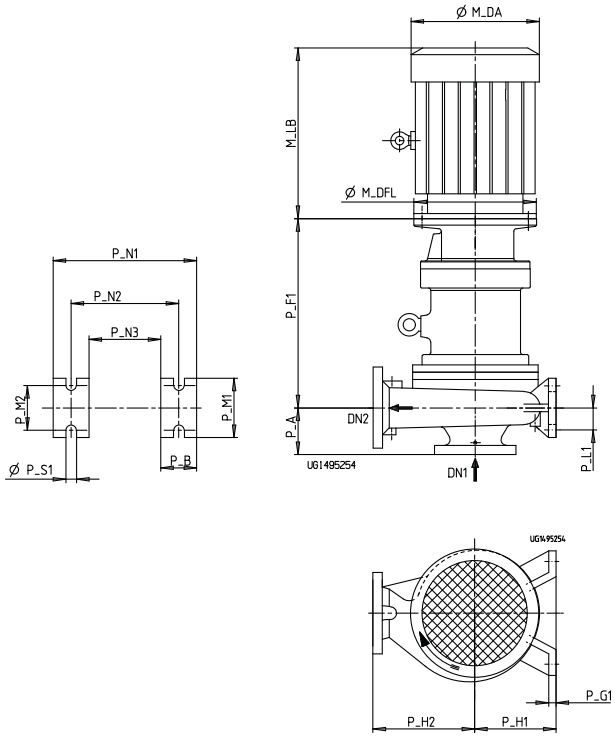

Fig. 9: Dimensions for vertical installation

Technical data of mounting plate

Dimensions [mm]	Weight [kg]
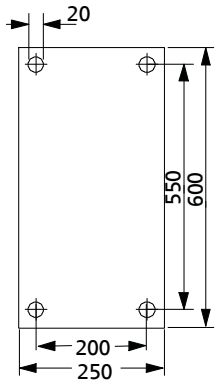 Height: 25	24

Pump dimensions

Size	Bearing bracket	Pump dimensions													
		DN1	DN2	P_A	P_B	P_G1	P_H1	P_H2	P_L1	P_M1	P_M2	P_N1	P_N2	P_N3	Ø P_S1
040-025-160[11)]	CS40	40	25	80	50	15	132	160	35	100	70	240	190	140	14
040-025-200[12)]	CS40	40	25	80	50	15	160	180	35	100	70	240	190	140	14
050-032-125[13)14)]	CS40	50	32	80	50	15	112	140	35	100	70	190	140	90	14
050-032-125.1[13)14)]	CS40	50	32	80	50	15	112	140	35	100	70	190	140	90	14
050-032-160[11)]	CS40	50	32	80	50	15	132	160	35	100	70	240	190	140	14
050-032-160.1[11)]	CS40	50	32	80	50	15	132	160	35	100	70	240	190	140	14
050-032-200[12)]	CS40	50	32	80	50	18	160	180	35	100	70	240	190	140	14

11 A mounting plate with a height of 25 mm is supplied for motor size 132.
12 A mounting plate with a height of 25 mm is supplied for motor size 160 or 180.
13 A mounting plate with a height of 25 mm is supplied for motor size 100 or 112.
14 A mounting plate and shims of a total height of 45 mm are supplied for motor size 132.

Size	Bearing bracket	Pump dimensions													
		DN1	DN2	P_A	P_B	P_G1	P_H1	P_H2	P_L1	P_M1	P_M2	P_N1	P_N2	P_N3	Ø P_S1
050-032-200.1[12)]	CS40	50	32	80	50	18	160	180	35	100	70	240	190	140	14
050-032-250	CS50	50	32	100	65	18	180	225	47,5	125	95	320	250	190	14
050-032-250.1	CS50	50	32	100	65	18	180	225	47,5	125	95	320	250	190	14
065-040-125[13)14)]	CS40	65	40	80	50	15	112	140	35	100	70	210	160	110	14
065-040-160[11)]	CS40	65	40	80	50	15	132	160	35	100	70	240	190	140	14
065-040-160.1[11)]	CS40	65	40	80	50	15	132	160	35	100	70	240	190	140	14
065-040-200[12)]	CS40	65	40	100	50	18	160	180	35	100	70	265	212	165	14
065-040-200.1[12)]	CS40	65	40	100	50	18	160	180	35	100	70	265	212	165	14
065-040-250	CS50	65	40	100	65	18	180	225	47,5	125	95	320	250	190	14
065-040-250.1	CS50	65	40	100	65	18	180	225	47,5	125	95	320	250	190	14
065-040-315	CS50	65	40	125	65	18	200	250	47,5	125	95	345	280	215	14
080-050-125[11)]	CS40	80	50	100	50	18	132	160	35	100	70	240	190	140	14
080-050-160[12)]	CS40	80	50	100	50	18	160	180	35	100	70	265	212	165	14
080-050-160.1[12)]	CS40	80	50	100	50	18	160	180	35	100	70	265	212	165	14
080-050-200[12)]	CS40	80	50	100	50	18	160	200	35	100	70	265	212	165	14
080-050-200.1[12)]	CS40	80	50	100	50	18	160	200	35	100	70	265	212	165	14
080-050-250	CS50	80	50	125	65	18	180	225	47,5	125	95	320	250	190	14
080-050-250.1	CS50	80	50	125	65	18	180	225	47,5	125	95	320	250	190	14
080-050-315	CS50	80	50	125	65	18	225	280	47,5	125	95	345	280	215	14
080-050-315.1	CS50	80	50	125	65	18	225	280	47,5	125	95	345	280	215	14
100-065-125[12)]	CS40	100	65	100	65	18	160	180	47,5	125	95	280	212	150	14
100-065-160[12)]	CS50	100	65	100	65	18	160	200	47,5	125	95	280	212	150	14
100-065-200	CS50	100	65	100	65	18	180	225	47,5	125	95	320	250	190	14
100-065-250	CS50	100	65	125	80	20	200	250	60	160	120	360	280	200	18
100-065-315	CS60	100	65	125	80	20	225	280	60	160	120	400	315	240	18
125-080-160	CS50	125	80	125	65	18	180	225	47,5	125	95	320	250	190	14
125-080-200	CS50	125	80	125	65	18	180	250	47,5	125	95	345	280	215	14
125-080-200.1	CS50	125	80	125	65	18	180	250	47,5	125	95	345	280	215	14
125-080-250	CS50	125	80	125	80	18	225	280	60	160	120	400	315	240	18
125-080-315	CS60	125	80	125	80	20	250	315	60	160	120	400	315	240	18
125-080-400	CS60	125	80	125	80	20	280	355	60	160	120	435	355	275	18
125-100-160	CS50	125	100	125	80	18	200	280	60	160	120	360	280	200	19
125-100-200	CS50	125	100	125	80	18	200	280	60	160	120	360	280	200	18
125-100-250	CS60	125	100	140	80	18	225	280	60	160	120	400	315	240	18
125-100-315	CS60	125	100	140	80	18	250	315	60	160	120	400	315	240	18
125-100-400	CS60	125	100	140	100	20	280	355	75	200	150	500	400	300	23
150-125-200	CS60	150	125	140	80	20	250	315	60	160	120	400	315	240	19
150-125-250	CS60	150	125	140	80	20	250	355	60	160	120	400	315	240	18
150-125-315	CS60	150	125	140	100	20	280	355	75	200	150	500	400	300	23
150-125-400	CS60	150	125	140	100	20	315	400	75	200	150	500	400	300	23
200-150-200	CS60	200	150	180	100	20	280	400	75	200	150	550	450	350	24
200-150-250	CS60	200	150	160	100	20	280	375	75	200	150	500	400	300	23

Pump dimensions

Size	Bearing bracket	Motor frame size[15)]						
		90S 90L	100L 112M	132S 132M	160M 160L 180M 180L	200	225M, 2 poles 225S, 4-6 poles 225M, 4-6 poles	250M, 2 poles 250M, 4-6 poles 280S, 2 poles 280M, 2 poles 280S, 4-6 poles 280M, 4-6 poles
		P_F1						
040-025-160[11)]	CS40	314	319	345	-	-	-	-
040-025-200[12)]	CS40	314	319	345	379	-	-	-
050-032-125[13)14)]	CS40	314	319	345	-	-	-	-

15 From motor size 200, always with motor foot. Check for differences in the heights of pump feet and motor feet. Sub-bases for compensating differences in height are not included in the scope of supply.

Size	Bearing bracket	Motor frame size[15]						
		90S 90L	100L 112M	132S 132M	160M 160L 180M 180L	200	225M, 2 poles 225S, 4-6 poles 225M, 4-6 poles	250M, 2 poles 250M, 4-6 poles 280S, 2 poles 280M, 2 poles 280S, 4-6 poles 280M, 4-6 poles
		P_F1						
050-032-125.1[13)14)]	CS40	314	319	345	-	-	-	-
050-032-160[11)]	CS40	314	319	345	-	-	-	-
050-032-160.1[11)]	CS40	314	319	345	-	-	-	-
050-032-200[12)]	CS40	314	319	345	379	-	-	-
050-032-200.1[12)]	CS40	314	319	345	379	-	-	-
050-032-250	CS50	399	404	430	464	504	524	534
050-032-250.1	CS50	399	404	430	464	504	524	534
065-040-125[13)14)]	CS40	314	319	345	-	-	-	-
065-040-160[11)]	CS40	314	319	345	-	-	-	-
065-040-160.1[11)]	CS40	314	319	345	-	-	-	-
065-040-200[11)]	CS40	314	319	345	379	-	-	-
065-040-200.1[12)]	CS40	314	319	345	379	-	-	-
065-040-250	CS50	399	404	430	464	504	524	534
065-040-250.1	CS50	399	404	430	464	504	524	534
065-040-315	CS50	399	404	430	464	504	524	534
080-050-125[11)]	CS40	314	319	345	-	-	-	-
080-050-160[12)]	CS40	314	319	345	379	-	-	-
080-050-160.1[12)]	CS40	314	319	345	379	-	-	-
080-050-200[12)]	CS40	314	319	345	379	-	-	-
080-050-200.1[12)]	CS40	314	319	345	379	-	-	-
080-050-250	CS50	399	404	430	464	504	524	534
080-050-250.1	CS50	399	404	430	464	504	524	534
080-050-315	CS50	399	404	430	464	504	524	534
080-050-315.1	CS50	399	404	430	464	504	524	534
100-065-125[12)]	CS40	314	319	345	379	-	-	-
100-065-160[12)]	CS50	399	404	430	464	504	524	534
100-065-200	CS50	399	404	430	464	504	524	534
100-065-250	CS50	399	404	430	464	504	524	534
100-065-315	CS60	399	404	430	464	504	524	534
125-080-160	CS50	399	404	430	464	504	524	534
125-080-200	CS50	399	404	430	464	504	524	534
125-080-200.1	CS50	399	404	430	464	504	524	534
125-080-250	CS50	399	404	430	464	504	524	534
125-080-315	CS60	399	404	430	464	504	524	534
125-080-400	CS60	399	404	430	464	504	524	534
125-100-160	CS50	399	404	430	464	504	524	534
125-100-200	CS50	399	404	430	464	504	524	534
125-100-250	CS60	399	404	430	464	504	524	534
125-100-315	CS60	399	404	430	464	504	524	534
125-100-400	CS60	399	404	430	464	504	524	534
150-125-200	CS60	399	404	430	464	504	524	534
150-125-250	CS60	399	404	430	464	504	524	534
150-125-315	CS60	399	404	430	464	504	524	534
150-125-400	CS60	399	404	430	464	504	524	534
200-150-200	CS60	399	404	430	464	504	524	534
200-150-250	CS60	399	404	430	464	504	524	534

2747.51/05-EN

Motor dimensions

Motor dimensions

Designation	90S	90L	100L	112M	132S	132M	160M	160L	180M	180L	200L	2 poles				4 poles				
												225M	250M	280S	280M	225M	225S	250M	280S	280M
M_LB[16]	282	308	382	371	413	441	546	552	610	610	669	755	817	925	980	725	695	817	925	980
M_DA[16]	190	190	213	234	266	298	325	325	370	370	422	468	520	575	575	468	460	520	575	575
M_DFL	200	200	250	250	300	300	350	350	350	350	400	450	550	550	550	450	450	550	550	550
A_L[17]	-	-	-	-	-	-	-	-	-	-	637	673	702	724	724	673	673	702	724	724
M_H1	-	-	-	-	-	-	-	-	-	-	200	225	250	280	280	225	225	250	280	280
M_A	-	-	-	-	-	-	-	-	-	-	318	356	406	457	457	356	356	406	457	457
M_AA[16]	-	-	-	-	-	-	-	-	-	-	85	100	100	100	100	100	100	100	100	100
M_AB [16]	-	-	-	-	-	-	-	-	-	-	400	450	506	557	557	450	450	506	557	557
M_B	-	-	-	-	-	-	-	-	-	-	305	311	349	368	419	311	286	349	368	419
M_BB[16]	-	-	-	-	-	-	-	-	-	-	388	410	425	480	530	410	385	425	480	530
M_BK	-	-	-	-	-	-	-	-	-	-	19	19	24	24	24	19	19	24	24	24
M_HA[16]	-	-	-	-	-	-	-	-	-	-	30	35	40	40	40	35	35	40	40	40

Dimensions of pump with support foot

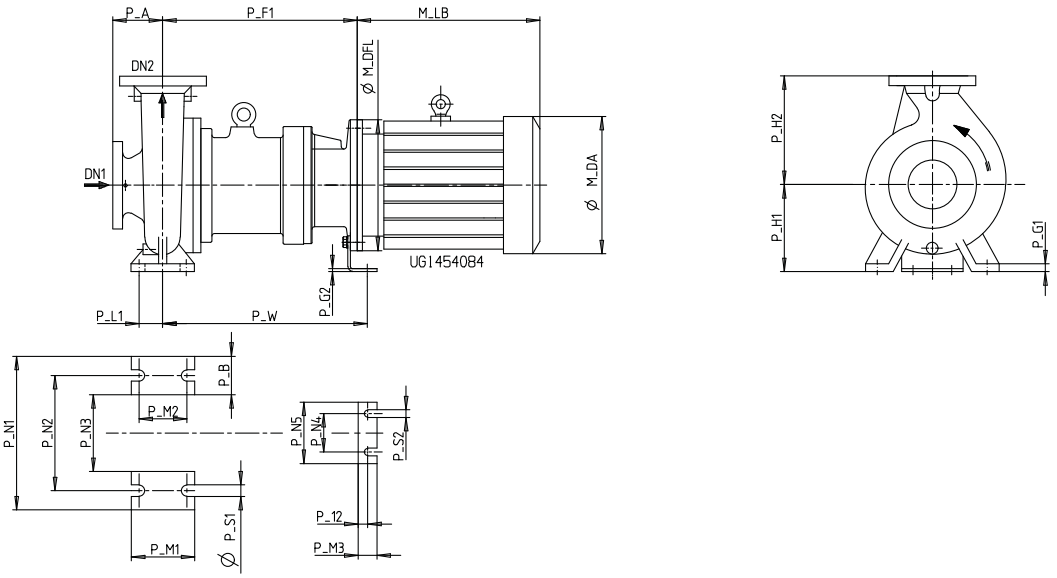

Fig. 10: Dimensions for installation with support foot

2747.51/05-EN

16 The figures indicated refer to the maximum dimensions.
17 The dimension applies to a motor combined with a CS50 or CS60 bearing bracket.

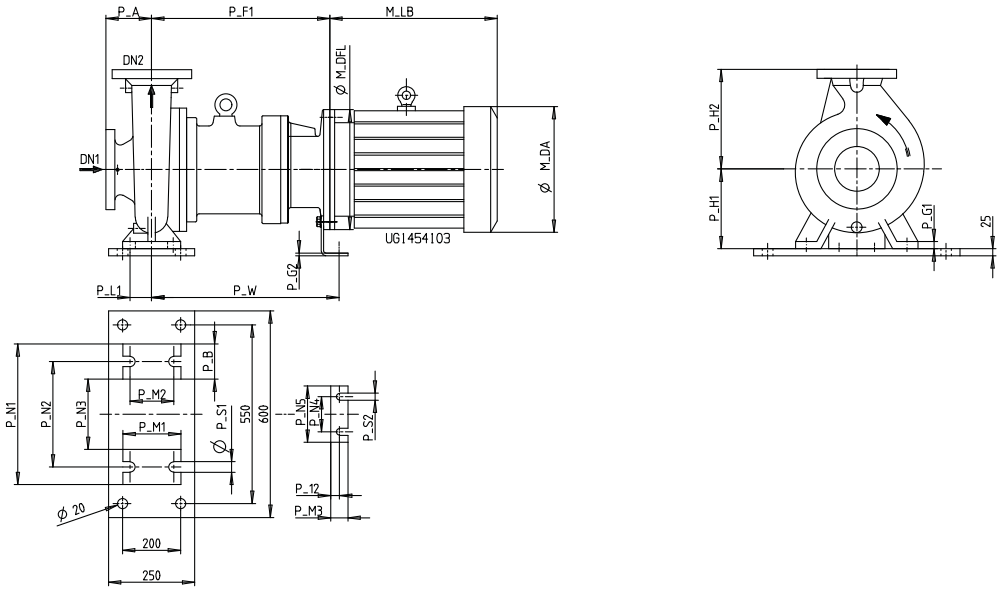

Fig. 11: Dimensions for installation with support foot and mounting plate

Dimensions of pump with support foot[18)]

Size	Bearing bracket	P_W	P_S2	P_N4	P_N5	P_12	P_M3	P_G2
040-025-160	CS40	-	-	-	-	-	-	-
040-025-200	CS40	370	14	110	160	20	48	4
050-032-125	CS40	-	-	-	-	-	-	-
050-032-125.1	CS40	-	-	-	-	-	-	-
050-032-160	CS40	-	-	-	-	-	-	-
050-032-160.1	CS40	-	-	-	-	-	-	-
050-032-200	CS40	370	14	110	160	20	48	4
050-032-200.1	CS40	370	14	110	160	20	48	4
050-032-250	CS50	455	14	110	160	20	48	4
050-032-250.1	CS50	455	14	110	160	20	48	4
065-040-125	CS40	-	-	-	-	-	-	-
065-040-160	CS40	-	-	-	-	-	-	-
065-040-160.1	CS40	-	-	-	-	-	-	-
065-040-200	CS40	370	14	110	160	20	48	4
065-040-200.1	CS40	370	14	110	160	20	48	4
065-040-250	CS50	455	14	110	160	20	48	4
065-040-250.1	CS50	455	14	110	160	20	48	4
065-040-315	CS50	455	14	110	160	20	48	4
080-050-125	CS40	-	-	-	-	-	-	-
080-050-160	CS40	370	14	110	160	20	48	4
080-050-160.1	CS40	370	14	110	160	20	48	4
080-050-200	CS40	370	14	110	160	20	48	4
080-050-200.1	CS40	370	14	110	160	20	48	4
080-050-250	CS50	455	14	110	160	20	48	4
080-050-250.1	CS50	455	14	110	160	20	48	4
080-050-315	CS50	455	14	110	160	20	48	4
080-050-315.1	CS50	455	14	110	160	20	48	4
100-065-125	CS40	370	14	110	160	20	48	4
100-065-160	CS50	455	14	110	160	20	48	4
100-065-200	CS50	455	14	110	160	20	48	4
100-065-250	CS50	455	14	110	160	20	48	4
100-065-315	CS60	455	14	110	160	20	48	4
125-080-160	CS50	455	14	110	160	20	48	4
125-080-200	CS50	455	14	110	160	20	48	4

18 A support foot is only supplied for motor sizes 160M, 160L, 180M, 180L.

Size	Bearing bracket	P_W	P_S2	P_N4	P_N5	P_12	P_M3	P_G2
125-080-200.1	CS50	455	14	110	160	20	48	4
125-080-250	CS50	455	14	110	160	20	48	4
125-080-315	CS60	453	14	110	160	20	48	6
125-080-400	CS60	453	14	110	160	20	48	6
125-100-160	CS50	455	14	110	160	20	48	4
125-100-200	CS50	455	14	110	160	20	48	4
125-100-250	CS60	455	14	110	160	20	48	4
125-100-315	CS60	453	14	110	160	20	48	6
125-100-400	CS60	453	14	110	160	20	48	6
150-125-200	CS60	453	14	110	160	20	48	6
150-125-250	CS60	453	14	110	160	20	48	6
150-125-315	CS60	453	14	110	160	20	48	6
150-125-400	CS60	453	14	110	160	20	48	6
200-150-200	CS60	453	14	110	160	20	48	6
200-150-250	CS60	453	14	110	160	20	48	6

Dimensions of pump feet and motor feet

Differences in height, pump feet and motor feet

Pump		Motor			
Size	Bearing bracket	200 P_H1-M_H1	225 P_H1-M_H1	250 P_H1-M_H1	280 P_H1-M_H1
100-065-160	CS50	-40	-65	-90	-120
125-080-160	CS50	-20	-45	-70	-100
100-065-200	CS50	-20	-45	-70	-100
050-032-250	CS50	-20	-45	-70	-100
050-032-250.1	CS50	-20	-45	-70	-100
065-040-250	CS50	-20	-45	-70	-100
065-040-250.1	CS50	-20	-45	-70	-100
080-050-250	CS50	-20	-45	-70	-100
080-050-250.1	CS50	-20	-45	-70	-100
125-080-200	CS50	-20	-45	-70	-100
125-080-200.1	CS50	-20	-45	-70	-100
125-100-160	CS50	0	-25	-50	-50
125-100-200	CS50	0	-25	-50	-50
100-065-250	CS50	0	-25	-50	-50
125-080-250	CS50	20	0	-25	-55
065-040-315	CS50	0	-25	-50	-50
080-050-315	CS50	20	0	-25	-55
080-050-315.1	CS50	20	0	-25	-55
125-100-250	CS60	20	0	-25	-55
125-080-315	CS60	50	25	0	-30
150-125-200	CS60	50	25	0	-30
200-150-200	CS60	80	55	30	0
150-125-250	CS60	50	25	0	-30
200-150-250	CS60	80	55	30	0
100-065-315	CS60	20	0	-25	-55
125-100-315	CS60	50	25	0	-30
150-125-315	CS60	80	55	30	0
125-080-400	CS60	80	55	30	0
125-100-400	CS60	80	55	30	0
150-125-400	CS60	115	90	65	35

2747.51/05-EN

Connections

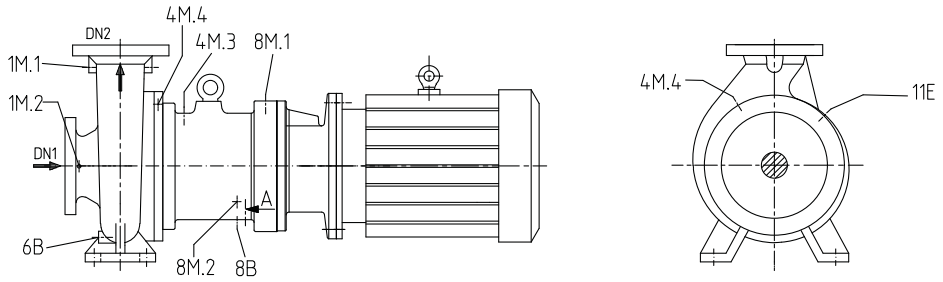

Fig. 12: Connections for operating modes: internal circulation and low-boiling fluids

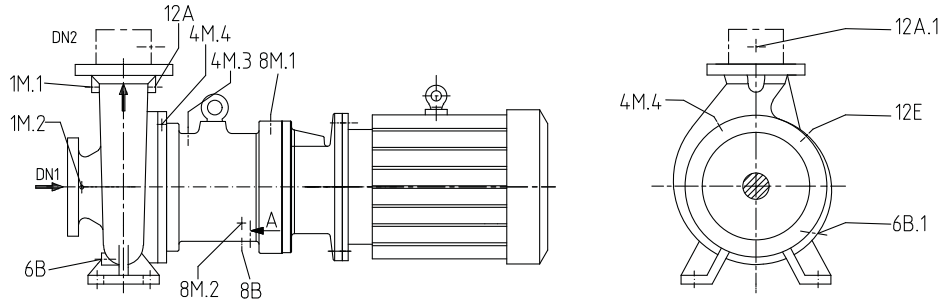

Fig. 13: Connections for operating modes: external circulation and external circulation with main flow filter

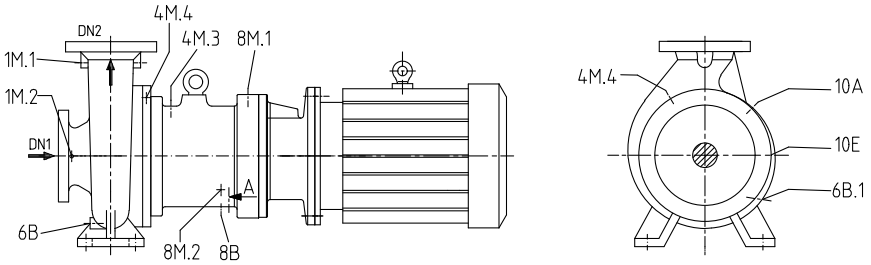

Fig. 14: Connections for dead-end configuration operating mode

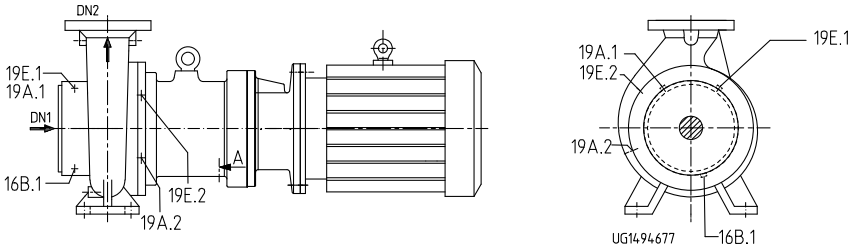

Fig. 15: Connections for heating[19)]

2747.51/05-EN

19 Only possible for operating modes: internal circulation, low-boiling fluids and dead-end configuration

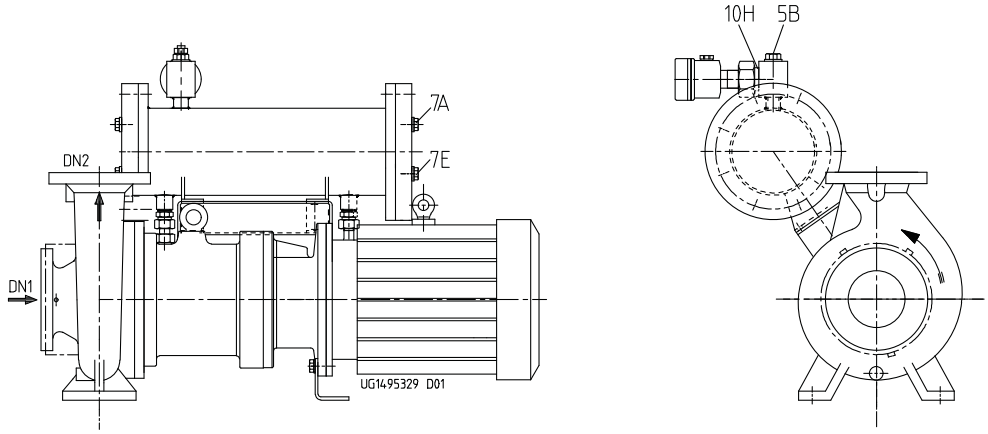

Fig. 16: Connections for heat exchanger

Connections at the volute casing

Connection	Description	Discharge nozzle		
		≤ DN 50	DN 65 - DN 80	≥ DN 100
1M.1	Pressure gauge	G1/4	G3/8	G1/2
1M.2	Pressure gauge	G1/4	G3/8	G1/2
6B[20)]	Fluid drain (volute casing)	G1/4	G3/8	G1/2
12A	Circulation liquid OUT	G1/4	G3/8	G1/2
16B.1	Condensate drain (volute casing)	G1/4		
19A.1	Heating liquid OUT (volute casing)	G3/8		
19E.1	Heating liquid IN (volute casing)	G3/8		

Connections for casing cover 161, bearing bracket lantern 344, intermediate piece 132.03, main flow filter

Connection	Description	Bearing bracket CS40/CS50/CS60 with MD 85/123/172
4M.3	Temperature monitoring of containment shroud, Pt100 resistance thermometer	G1/4
4M.4	Temperature monitoring of containment shroud, thermocouple	G1/4
6B.1	Containment shroud drain	G1/4
8B	Bearing bracket lantern drain	G1/4
8M.1	Leakage monitoring (gas, vapour)	G1/4
8M.2	Leakage monitoring (liquid)	G3/4
10A	Barrier fluid OUT	G1/4
10E	Barrier fluid IN	G1/4
11E	Flushing liquid, containment shroud IN	G1/4
12A.1	Main flow filter OUT	G1/4
12E	Circulation liquid IN	G1/4
19A.2	Heating liquid OUT (casing cover)	G3/8
19E.2	Heating liquid IN (casing cover)	G3/8

Connections for heat exchanger

Connection	Description	Heat exchanger size	Connection size
7A	Cooling liquid OUT	76	G 3/8
		115	G 3/4
		152	G 1
7E	Cooling liquid IN	76	G 3/8
		115	G 3/4
		152	G 1
5B	Vent	76	G 3/4
		115	
		152	

20 Design with DN 15 flange if drain line is provided.

Connection	Description	Heat exchanger size	Connection size
10H	Monitoring and check	76	G 1
		115	
		152	

Flange design

Overview of available flange designs

Material	Standard	Pressure class
C	EN 1092-1	PN16
	Drilled to ASME B16.5	Class 150
V	EN 1092-1	PN16
	Drilled to ASME B16.5	Class 150
E	EN 1092-1	PN16
	Drilled to ASME B16.5	Class 150/Class 300
E	EN 1092-1	PN25
	Drilled to ASME B16.5	Class 150/Class 300
Y	EN 1092-1	PN40
	Drilled to ASME B16.5	Class 300
D	EN 1092-1	PN16
	Drilled to ASME B16.5	Class 150/Class 300
D	EN 1092-1	PN25
	Drilled to ASME B16.5	Class 150/Class 300
Heatable casing	EN 1092-1	PN16
	Drilled to ASME B16.5	Class 150

Scope of supply

Depending on the model, the following items are included in the scope of supply:

- Pump
- Surface-cooled IEC three-phase current squirrel-cage motor
- Mounting plate
- Mounting plate adjusting elements for installation without foundation

Special accessories

- As required

Accessories

- Temperature monitoring (metal containment shroud)
  - Pt100 resistance thermometer
  - Mineral-insulated thermocouple
- Fill level monitoring as dry running protection
  - Liquiphant level transmitter
- Monitoring for containment shroud leakage
  - Liquiphant level transmitter
  - Contact pressure gauge
  - Pressure switch
  - Pressure transducer
- Monitoring of pump power to detect dry running and/or asynchronous operation of the magnetic coupling and to protect against overload operation
  - Motor load monitor

Electronic analysis equipment as well as additional components for operation in potentially explosive atmospheres can also be ordered from KSB.

2747.51/05-EN

General assembly drawings

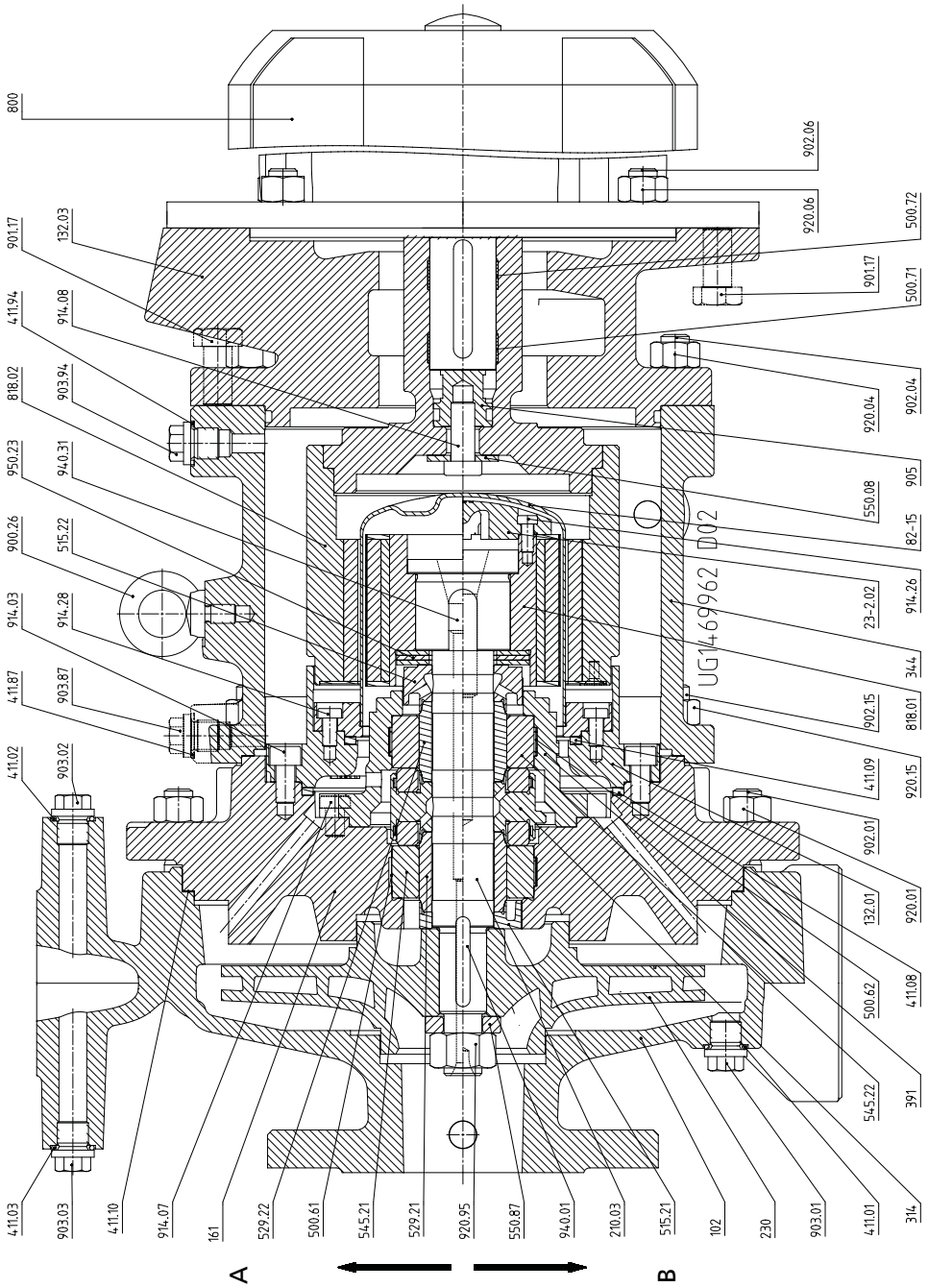

Fig. 17: General assembly drawing of model with bolted cover, with intermediate piece

A	Internal circulation, external circulation	B	Low-boiling fluids, dead-end configuration

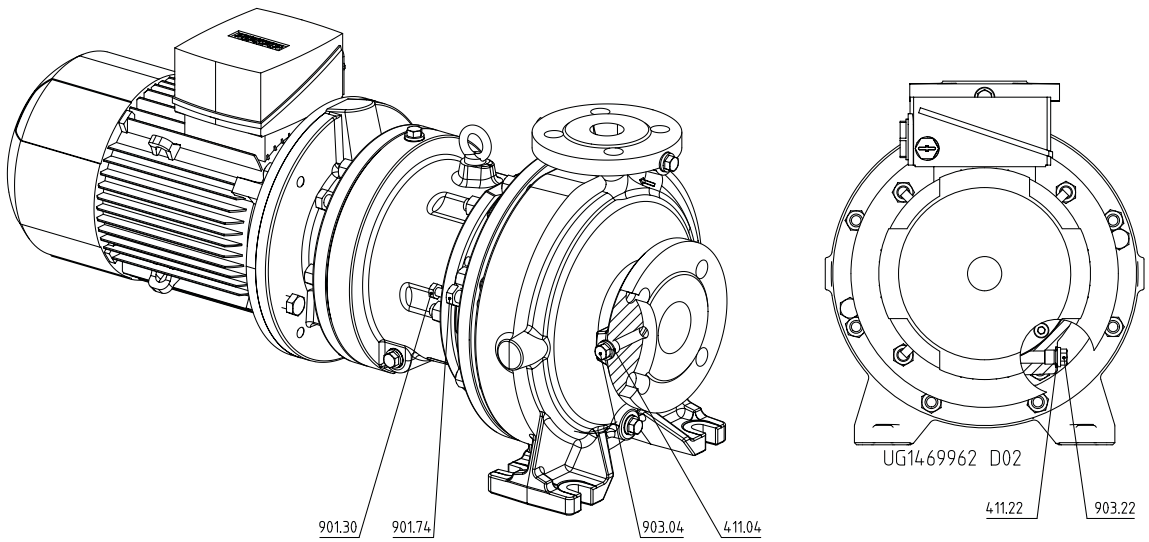

Fig. 18: Fastening of discharge cover on the pump casing on models with bolted cover

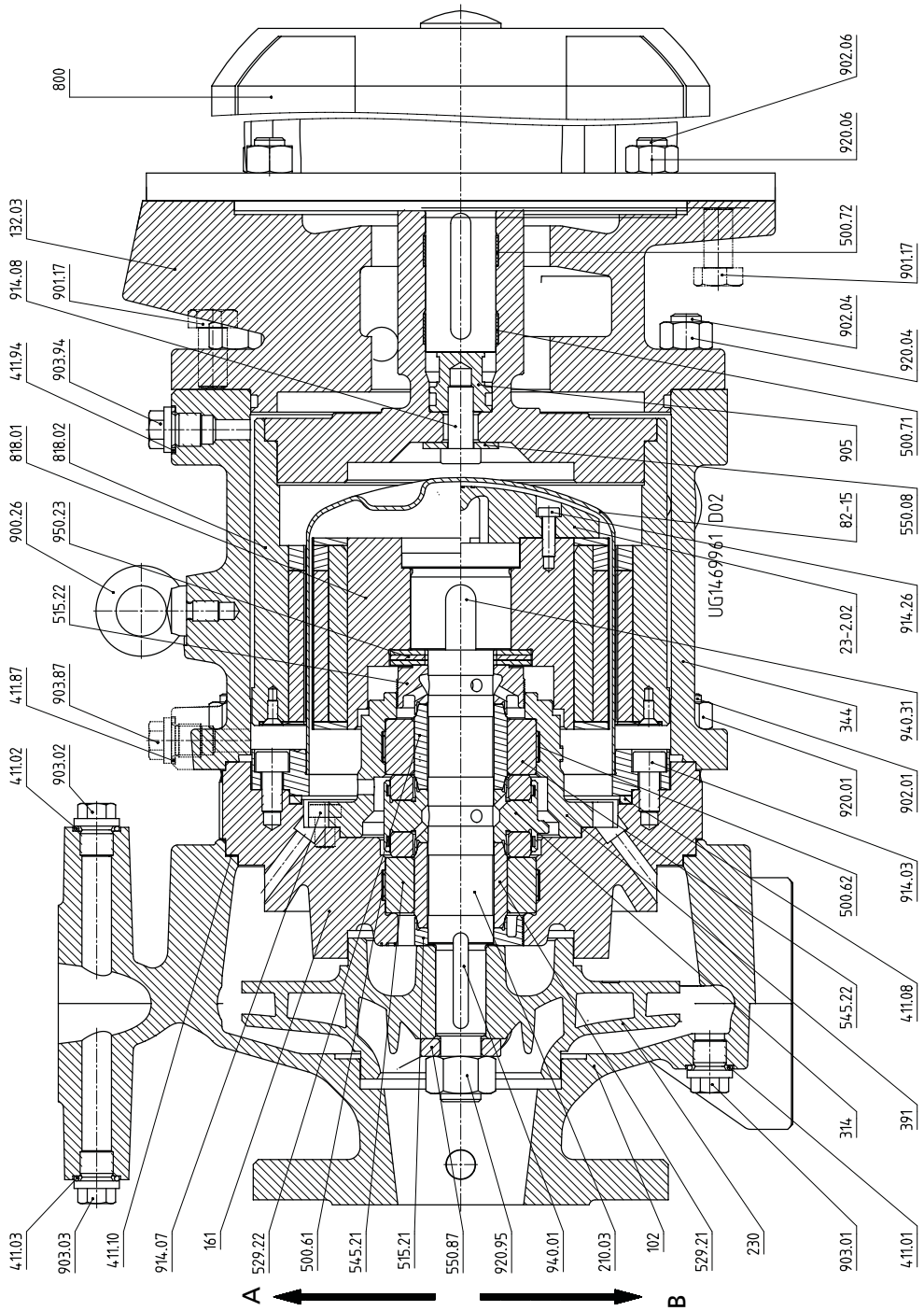

Fig. 19: General assembly drawing of model with clamped cover, without intermediate piece

A	Internal circulation, external circulation	B	Low-boiling fluids, dead-end configuration

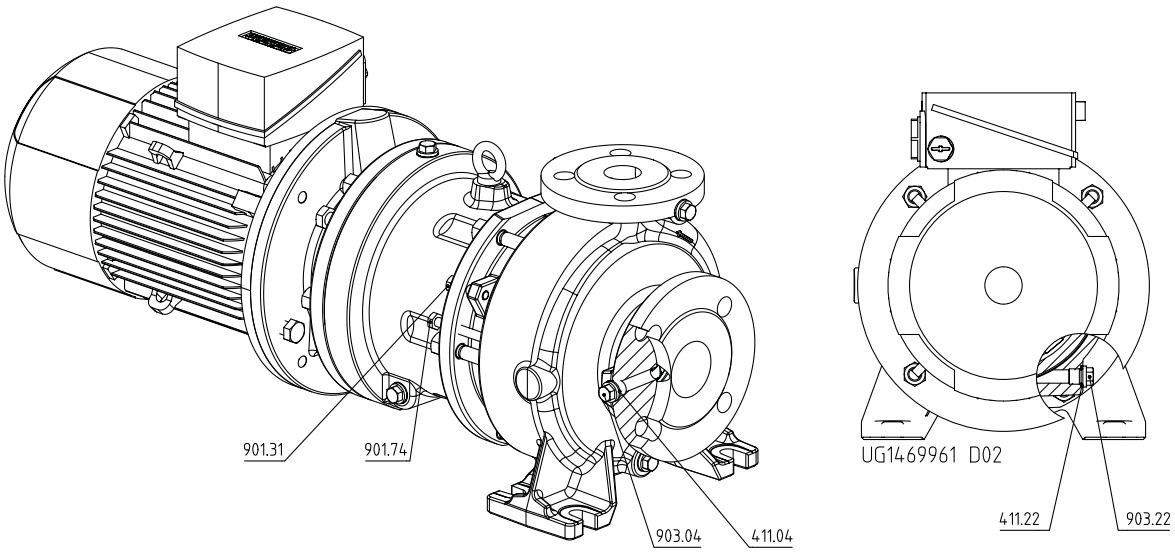

Fig. 20: Fastening of discharge cover on the pump casing on models with clamped cover

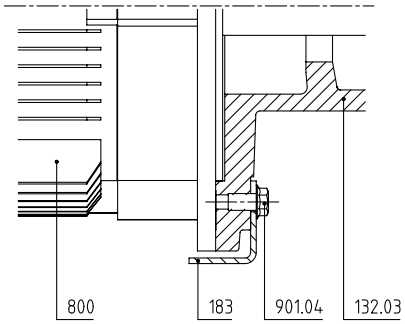

Fig. 21: Fastening of support foot for motors 160 and 180

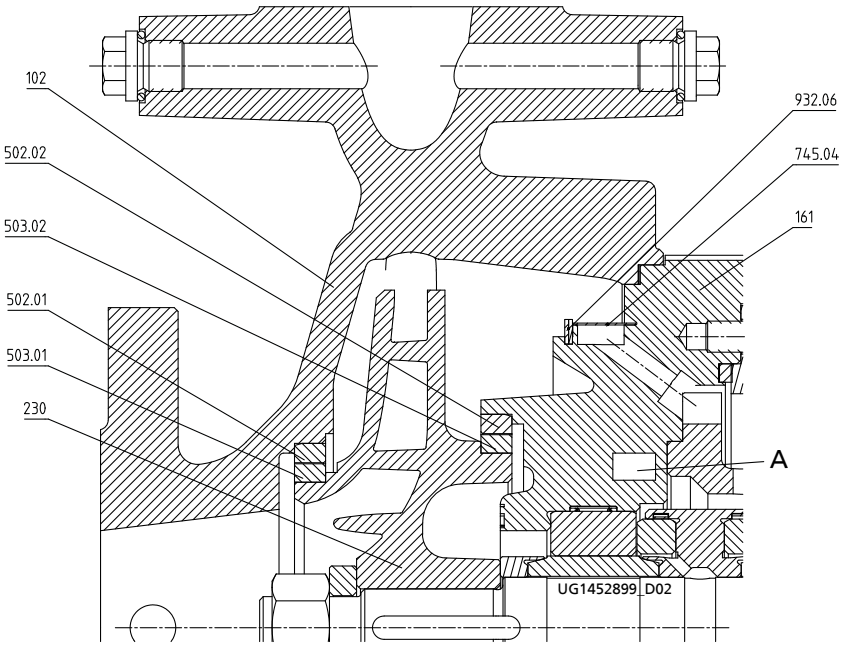

Fig. 22: Model with volute casing and ring filter, heating chamber, casing wear ring and impeller wear ring

A	Heating chamber

2747.51/05-EN

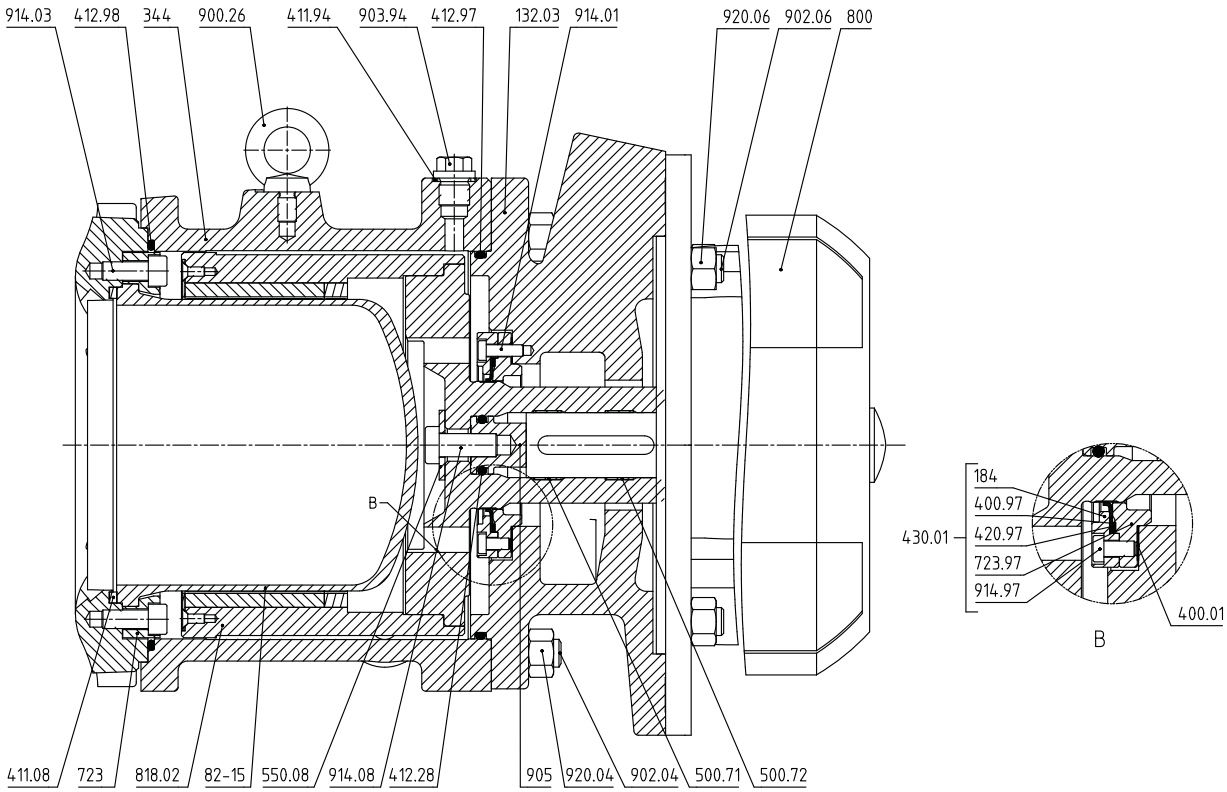

Fig. 23: Model with ceramic containment shroud and leakage barrier with shaft seal ring

List of components

Part No.	Comprising	Description
102	102	Volute casing
	411.01[21] /.02[21]/.03[21] /.04[21]	Joint ring
	502.01[21]	Casing wear ring
	902.01	Stud
	903.01[21] /.02[21] /.03[21] /.04[21]	Screw plug
	920.01	Hexagon nut
132.03	132.03	Intermediate piece
161	161	Casing cover
502.02[21]	502.02[21]	Casing wear ring
183	183[21]	Support foot
210.03	210.03	Shaft
	550.87	Disc
	920.95	Nut
	940.01/.31	Key
230	230	Impeller
	503.01[21] /.02[21]	Impeller wear ring
23-2.02	23-2.02[21]	Auxiliary impeller
	914.26[21]	Hexagon socket head cap screw
310	310	Plain bearing assembly
	500.61	Locking element
	500.62	Locking element
	515.21	Taper lock ring
	515.22	Taper lock ring
	529.21	Plain bearing sleeve
	529.22	Plain bearing sleeve
	545.21	Plain bearing bush
	545.22	Plain bearing bush
314	314	Thrust bearing

21 Not on all versions

Part No.	Comprising	Description
344	344	Bearing bracket lantern
391	391	Bearing ring carrier
411.08	411.08	Joint ring
411.09	411.09	Joint ring
411.10	411.10	Joint ring
411.22 /.87 /.94	411.22 /.87 /.94	Joint ring
500.71 /.72	500.71 /.72	Locking elements
509.02	509.02	Intermediate ring
550.08	550.08	Disc
800	800	Motor
818.01	818.01	Inner rotor
818.02	818.02	Outer rotor
82-15	82-15	Containment shroud
	132.01	Containment shroud intermediate piece
	723[22)]	Containment shroud flange
	914.03	Hexagon socket head cap screw
	914.28	Hexagon socket head cap screw
900.26	900.26	Eyebolt
901.04	901.04[21)]	Hexagon head bolt
901.17	901.17	Hexagon head bolt
901.30	901.30	Hexagon head bolt
901.31	901.31	Hexagon head bolt
901.74	901.74	Hexagon head bolt
902.04	902.04	Stud
902.06	902.06	Stud
902.15	902.15	Stud
903.22 /.87 /.94	903.22 /.87 /.94	Screw plug
905	905	Threaded connecting element
914.07	914.07	Hexagon socket head cap screw
914.08	914.08	Hexagon socket head cap screw
920.04	920.04	Nut
920.06	920.06	Nut
920.15	920.15	Nut
950.23	950.23	Disc spring
Casing cover design with ring filter		
745.04	745.04	Filter
932.06	932.06	Circlip
Models with leakage barrier – shaft seal ring		
430.01	430.01	Shaft seal
	184	Clamping ring
	400.97	Gasket
	420.97	Shaft seal ring
	723.97	Flange
	914.97	Hexagon socket head cap screw
400.01	400.01	Gasket
412.28 /.97 /.98	412.28 /.97 /.98	O-ring
914.01	914.01	Hexagon socket head cap screw

2747.51/05-EN

22 For versions with ceramic containment shroud only

Plain bearings arrangement

Designation example for a magnetic coupling: A 31

Key to designation of magnetic coupling

Code	Description	
A	Components and position	
	A	Without 509.02
	B	With 509.02 / 950.23 left
	C	With 509.02 / 950.23 right

Code	Description	
3	Number of disc springs	
	2	2x 950.23
	3	3x 950.23
1	Variant with 515.xx on thrust bearing	
	1	515.11, single-piece
	2	515.11 / 515.12, two-piece

Overview of plain bearings arrangement

Size	Bearing bracket	Nominal diameter of magnetic coupling [mm]		
		85	123	172
		1	2[23)]	3[23)]
040-25-160	CS40	A31	A31	-
040-25-200	CS40	A31	A31	-
050-32-125	CS40	A31	A31	-
050-32-125.1	CS40	A31	A31	-
050-32-160	CS40	A31	A31	-
050-32-160.1	CS40	A31	A31	-
050-32-200	CS40	A31	A31	-
050-32-200.1	CS40	A31	A31	-
050-32-250	CS50	B21	B21	A21
050-32-250.1	CS50	B21	B21	A21
065-40-125	CS40	A31	A31	-
065-40-160	CS40	A31	A31	-
065-40-160.1	CS40	A31	A31	-
065-40-200	CS40	A31	A31	-
065-40-200.1	CS40	A31	A31	-
065-40-250	CS50	B21	B21	A21
065-40-250.1	CS50	B21	B21	A21
065-40-315	CS50	B21	B21	A21
080-50-125	CS40	A31	A31	-
080-50-160	CS40	A31	A31	-
080-50-160.1	CS40	A31	A31	-
080-50-200	CS40	A31	A31	-
080-50-200.1	CS40	A31	A31	-
080-50-250	CS50	B21	B21	A21
080-50-250.1	CS50	B21	B21	A21
080-50-315	CS50	B21	B21	A21
080-50-315.1	CS50	B21	B21	A21
100-65-125	CS40	A31	A31	-
100-65-160	CS50	B21	B21	A21
100-65-200	CS50	B21	B21	A21
100-65-250	CS50	B21	B21	A21
100-65-315	CS60	B21	B21	A21
125-80-160	CS50	B21	B21	A21
125-80-200	CS50	B21	B21	A21
125-80-200.1	CS50	B21	B21	A21
125-80-250	CS50	B21	B21	A21
125-80-315	CS60	B21	B21	A21
125-80-400	CS60	B21	B21	A21
125-100-160	CS50	B21	B21	A21
125-100-200	CS50	B21	B21	A21
125-100-250	CS60	B21	B21	A21
125-100-315	CS60	B21	B21	A21
125-100-400	CS60	B21	B21	A21

23 Nominal diameter of magnetic coupling as per name plate

Size	Bearing bracket	Nominal diameter of magnetic coupling [mm]		
		85	123	172
		1	2[23)]	3[23)]
150-125-200	CS60	B21	B21	A21
150-125-250	CS60	B21	B21	A21
150-125-315	CS60	B21	B21	A21
150-125-400	CS60	B21	B21	A21
200-150-200	CS60	B21	B21	A21
200-150-250	CS60	B21	B21	A21

Plain bearings arrangement

Description	Illustration
Case A21 ▪ Bearing brackets CS50 and CS60 Magnetic coupling 172	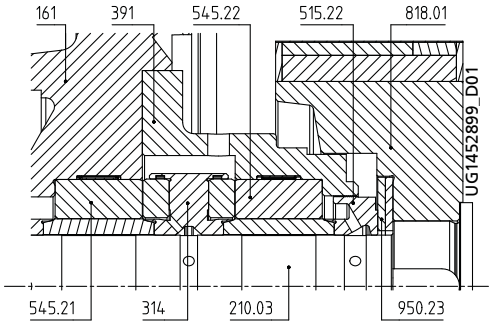
Case B21 ▪ Bearing brackets CS50 and CS60 Magnetic couplings 85 and 123	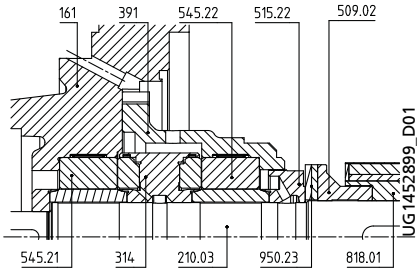
Case A31 ▪ Bearing bracket CS40 Magnetic coupling 85/123	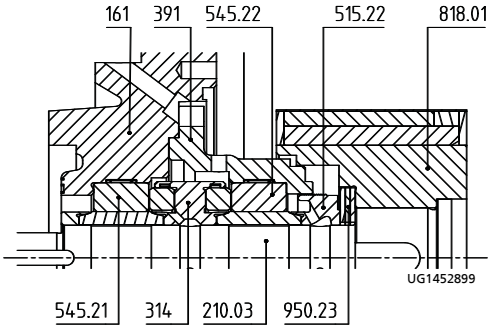

2747.51/05-EN

01/10/2020

2747.51/05-EN

LENNTECH
WATER TREATMENT SOLUTIONS
info@lenntech.com Tel. +31-152-610-900
www.lenntech.com Fax. +31-152-616-289