LENNTECH
WATER TREATMENT SOLUTIONS

Multistage Horizontal High-pressure Centrifugal Pump

Movitec H(S)I

Type Series Booklet

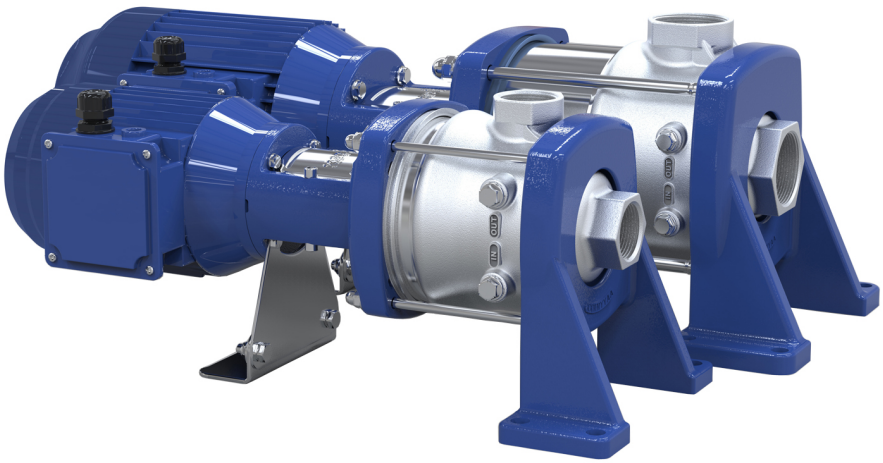

KSB

Legal information/Copyright

Type Series Booklet Movitec H(S)I

All rights reserved. The contents provided herein must neither be distributed, copied, reproduced, edited or processed for any other purpose, nor otherwise transmitted, published or made available to a third party without the manufacturer's express written consent.

Subject to technical modification without prior notice.

© KSB SE & Co. KGaA, Frankenthal 2024-07-09

Contents

High-pressure Pumps **5**
Multistage Horizontal High-pressure Centrifugal Pump 5
Movitec H(S)I 5
Main applications 5
Fluids handled 5
Operating data 5
Design details 5
Designation 6
Materials 8
Coating and preservation 8
Product benefits 9
Product information 9
Product information as per Regulation No. 1907/2006 (REACH) 9
Certifications 9
Acceptance tests and warranty 9
Selection information 10
Impeller for lower NPSH values 10
Information about the characteristic curve 11
Fluid handled 12
Minimum flow rate and maximum flow rate 12
Overview of product features / selection tables 13
Overview of fluids handled 13
Shaft seal 17
Technical data 18
Motors 18
Selection chart 20
Movitec H(S)I, n = 2900 rpm 20
Movitec H(S)I, n = 1450 rpm 21
Movitec H(S)I, n = 3500 rpm 22
Movitec H(S)I, n = 1750 rpm 23
Characteristic curves 24
n = 2900 rpm 25
Movitec H(S)I, 2B, n = 2900 rpm 25
Movitec H(S)I, 2-LB, n = 2900 rpm 26
Movitec H(S)I, 4B, n = 2900 rpm 27
Movitec H(S)I, 4-LB, n = 2900 rpm 28
Movitec H(S)I, 6B, n = 2900 rpm 29
Movitec H(S)I, 6-LB, n = 2900 rpm 30
Movitec H(S)I, 10B, n = 2900 rpm 31
Movitec H(S)I, 10-LB, n = 2900 rpm 32
Movitec H(S)I, 15C, n = 2900 rpm 33
Movitec H(S)I, 15-LC, n = 2900 rpm 34
n = 1450 rpm 35
Movitec H(S)I, 10B, n = 1450 rpm 35
Movitec H(S)I, 10-LB, n = 1450 rpm 36
Movitec H(S)I, 15C, n = 1450 rpm 37
Movitec H(S)I, 15-LC, n = 1450 rpm 38
n = 3500 rpm 39
Movitec H(S)I, 2B, n = 3500 rpm 39
Movitec H(S)I, 2-LB, n = 3500 rpm 40
Movitec H(S)I, 4B, n = 3500 rpm 41
Movitec H(S)I, 4-LB, n = 3500 rpm 42
Movitec H(S)I, 6B, n = 3500 rpm 43
Movitec H(S)I, 6-LB, n = 3500 rpm 44
Movitec H(S)I, 10B, n = 3500 rpm 45
Movitec H(S)I, 10-LB, n = 3500 rpm 46
Movitec H(S)I, 15C, n = 3500 rpm 47
Movitec H(S)I, 15-LC, n = 3500 rpm 48
n = 1750 rpm 49
Movitec H(S)I, 10B, n = 1750 rpm 49
Movitec H(S)I, 10-LB, n = 1750 rpm 50
Movitec H(S)I, 15C, n = 1750 rpm 51

Movitec H(S)I, 15-LC, n = 1750 rpm ... 52
Installation types ... 53
Dimensions and connections ... 54
Movitec H(S)I 2B, n = 2900 rpm ... 54
Movitec H(S)I 2B, n = 3500 rpm ... 55
Movitec H(S)I 4B, n = 2900 rpm ... 56
Movitec H(S)I 4B, n = 3500 rpm ... 57
Movitec H(S)I 6B, n = 2900 rpm ... 58
Movitec H(S)I 6B, n = 3500 rpm ... 59
Movitec H(S)I 10B, n = 1450 rpm ... 60
Movitec H(S)I 10B, n = 1750 rpm ... 61
Movitec H(S)I 10B, n = 2900 rpm ... 62
Movitec H(S)I 10B, n = 3500 rpm ... 63
Movitec H(S)I 15C, n = 1450 rpm ... 64
Movitec H(S)I 15C, n = 1750 rpm ... 65
Movitec H(S)I, 15C, n = 2900 rpm ... 66
Movitec H(S)I 15C, n = 3500 rpm ... 67
Scope of supply ... 67
Accessories ... 67
General assembly drawing with list of components ... 68
Movitec H(S)I 2/4/6 B ... 68
Movitec H(S)I 10 B ... 69
Movitec H(S)I 15 C ... 71

High-pressure Pumps

Multistage Horizontal High-pressure Centrifugal Pump

Movitec H(S)I

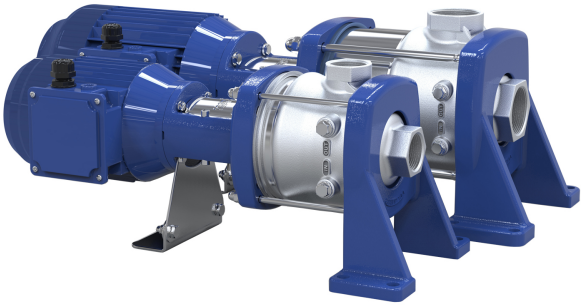

Main applications

- Spray irrigation systems
- General irrigation systems
- Washing plants
- Fire-fighting systems
- Pressure boosting
- Industrial plants
- Water supply systems
- Heating, ventilation and air-conditioning systems
- Marine applications

Fluids handled

- Hot water
- Clear water
- Condensate
- Cooling water
- Fire-fighting water
- Oil
- Cleaning agents
- And others

Operating data

Table 1: Operating properties

Characteristic		Value
Flow rate	Q [m³/h]	≤ 27
Head	H [m]	≤ 195
Fluid temperature	T [°C]	≥ -20
		≤ +140
Operating pressure	p [bar]	≤ 25

Design details

Design

- High-pressure pump
- Maximum pressure class PN 25
- Centrifugal pump
- Single-stage or multistage

Installation

- Horizontal installation

Drive

- Surface-cooled KSB squirrel-cage motor
- Thermal class F to IEC 34-1
- Efficiency class IE3 to IEC 60034-30 (≥ 0.75 kW)
- Enclosure IP55
- Frequency 50 Hz/60 Hz

Optional:

- Harting connector, type HAN 10E

Automation

Automation options:

- PumpDrive
- PumpMeter

Shaft seal

- Uncooled maintenance-free mechanical seal
  - Fixed mechanical seal
  - Easy Access mechanical seal
  - Cartridge mechanical seal

Bearings

- Tungsten carbide plain bearings at the hydraulic rotor

1798.55/07-EN

Designation

Table 2: Designation example

Position																															
1	2	3	4	5	6	7	8	9	10	11	12	13	14	15	16	17	18	19	20	21	22	23	24	25	26	27	28	29	30	31	32
M	o	v	i	t	e	c	H	S	I	0	1	5	/	0	4	-	C	4	S	1	3	E	S	1	1	2	B	7	U	A	X
See name plate and data sheet																		See data sheet													

Table 3: Designation key

Position	Code	Description
1-7	Type series	
	Movitec	
8-9	Variant	
	H	Cast steel (1.4308)
	HS	Cast steel (1.4408)
10	Connection type	
	I	Internal thread
11-13	Size	
	002	2
	...	...
	015	15
15-16	Number of stages	
	01	1
	...	...
	14	14
17	Number of stages with special impeller	
	-[1]	No stage with a special impeller
	L	1 stage with a special impeller for lower NPSH values
18	Product generation	
	B	Movitec from 2010
	C	Movitec since 2021
19	Connection standard	
	4	Internal thread (EN ISO 228-1)
20	Material variant	
	S	Cast steel (1.4408 - 1.4408 - EN-GJS-400-15)
21-22	Seal code	
	50	AQ7EGG
	51	AQ7EGGY10
	53	BQ7EGGY10WA
	54	BQ7EGGWA
	55	BQ7VGG
	56	BQ7VGGY10
	58	Q7Q7EGGY10WA
	59	Q7Q7EGGWA
	60	Q7Q7VGG
	61	Q7Q7VGGY10
23	Mechanical seal design	
	F	Fixed mechanical seal
	E	Easy Access mechanical seal
	C	Cartridge mechanical seal
24	Drive	
	0	Without motor
	2	With PumpDrive 2
	E	With PumpDrive 2 Eco
	S	Standard IEC
25-27	Motor size	
	071	IEC 071
	080	IEC 080

1798.55/07-EN

1 Blank

Position	Code	Description
25-27	090	IEC 090
	100	IEC 100
	112	IEC 112
	132	IEC 132
28	Pressure class	
	A	PN16 / PN25
	B	PN25
29	Frequency, number of motor poles	
	5	50 Hz, 2-pole
	6	60 Hz, 2-pole
	7	50 Hz, 4-pole
	8	60 Hz, 4-pole
30	Motor specification	
	C	230 / 400 V - IE2
	M	230 V, single-phase AC motor
	U	230 / 400 V - IE3
	V	400 / 690 V - IE3
	W	230 / 400 V - IE4/IE5 (KSB SuPremE)
	X	400 / 690 V - IE4/IE5 (KSB SuPremE)
31	PumpMeter	
	A	With PumpMeter
	W	Without PumpMeter
32	Design	
	-[1)]	Standard
	X	Non-standard (BT3D, BT3)

Materials

Table 4: Overview of available materials

Part No.	Description	Design	
		H	HS
10-6	Pump shroud	1.4301	1.4404
101	Pump casing	1.4408	1.4408
108	Stage casing	1.4301	1.4404
160	Discharge cover	1.4301	1.4404
210	Shaft	1.4057	1.4460
230	Impeller	1.4301	1.4404
341	Drive lantern	EN-GJL-250[2] / EN-GJS-400-15[3]	
412	O-ring	EPDM-WRc / ACS	FPM
525	Spacer sleeve	1.4301	1.4401
529	Bearing sleeve	Tungsten carbide / aluminium oxide	
89-11	Retaining bracket	1.4301	
890	Baseplate	EN-GJS-400-15	
905	Tie bolt	1.4057	
920	Nut	1.4301	1.4404
932	Circlip	1.4571	

Table 5: Material comparison

EN	ASTM
EN-GJL-250	A48 Cl. 35 B
EN-GJS-400-15	A536 Gr. 60-40-18
1.4057	SS 431
1.4301	SS 304
1.4308	Gr. CF8
1.4404	SS 316L
1.4408	Gr. CF8M
1.4460	SS 329
1.4571	SS 316Ti

Coating and preservation

Table 6: Coating of pump components

Component	Coating
Drive lantern	Cataphoretic coating
Pump foot	Powder coating

1798.55/07-EN

2 Sizes 2B, 4B, 6B, 10B, 15C (≤ 4 kW)
3 Sizes 2B, 4B, 6B, 10B, 15C (≥ 5.5 kW)

Product benefits

- Reliable: product-lubricated plain bearings made of tungsten carbide, cast pump foot, torsion-resistant pump shroud and confined O-rings
- Long service life: corrosion-resistant hydraulic components made of stainless steel
- Easy to service: can be fitted with any standardised mechanical seal (to EN 12756)
- Easy to install underneath other machinery due to horizontal installation

Product information

Product information as per Regulation No. 1907/2006 (REACH)

For information as per European chemicals regulation (EC) No. 1907/2006 (REACH) see https://www.ksb.com/en-global/company/corporate-responsibility/reach.

Certifications

Table 7: Overview

Label	Effective in:	Comment
WRAS APPROVED PRODUCT	United Kingdom	Approved in accordance with the UK drinking water regulation

Acceptance tests and warranty

- Pressure test
  - to EN 809
- Leak test
  - with water
- Materials testing
  - Certificate of compliance with the order (corresponds to EN 10204)
    In the certificate of compliance with the order the manufacturer confirms by way of an informal report without specifying test results that the delivery complies with the stipulations of the purchase order.
  - Test report 2.2 on request
- Final inspection
  - Inspection certificate 3.1 to EN 10204 on request
- Hydraulic test

  The duty point of each pump is guaranteed to ISO 9906:2012 Grade 3B.
  This test is always carried out using the original motor.
  The NPSH and the suction lift are not measured (3.2 certificate available).
- Warranties
  Warranties are given within the scope of the valid terms and conditions of sale and delivery.

Selection information

Impeller for lower NPSH values

An impeller for lower NPSH values is available for sizes 2, 4, 6, 10 and 15.

This type of impeller ensures that the pump's NPSH curve is significantly improved.

The solution is based on a newly developed impeller for lower NPSH values and a modified stage casing.
Cavitation inside the pump can hence be prevented in the case of critical inlet conditions.

Risks of cavitation:

- Reduced lifetime of the pump due to damaged parts and unbalanced hydraulic system
- Excessive wear of pump parts or motor bearings
- Insufficient cooling and/or lubrication of the mechanical seal and pump bearing

Benefits of using impellers for lower NPSH values:

- More suitable in critical inlet conditions
- Easy adaptation to non-optimised application parameters
- The suction lift (Hp) is less crucial (the frame height of the degassing tank used in boiler feeding can be reduced).

Consequences of using impellers for lower NPSH values:

- No need to change pump installation heights or pump nozzles
- Minor adjustments to the characteristic curve

Calculation:

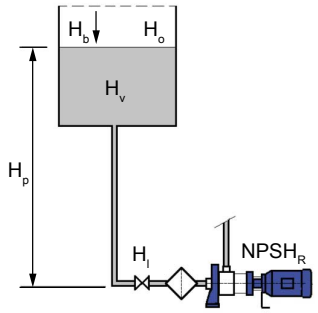

$$NPSH_A \geq NPSH_R + H_z$$

$$NPSH_A = H_b + H_o + H_p - H_v - H_l$$

$$x = H_b + H_o + H_p - H_v - H_l - NPSH_R - H_z$$

$$x \geq 0$$

Fig. 1: Calculating the $NPSH_A$

$NPSH_A$	NPSH system value at operating point
$NPSH_R$	NPSH pump value at operating point (see characteristic curve of the pump)
H_b	Atmospheric pressure [mWc]
H_o	Positive pressure (with tank closed) [mWc]
H_p	Suction lift [mWc]
H_v	Vaporisation pressure [mWc] (see water vaporisation pressure diagram)
H_l	Friction losses in pipes and accessories [mWc]
H_z	Safety margin (min. 0,5 m)
x	Minimum pressure

Result:

If the minimum pressure (x) is positive, there is no risk of cavitation.

If the minimum pressure (x) is negative, there is a risk of cavitation which can be avoided by using an impeller for lower NPSH values.
Another option is to change one of the other values so that the value becomes positive.

Example:

- Boiler feed water: 105 °C
- Positive height of tank: 2 m
- Positive pressure in tank: 3 mWc
- Flow rate: 5 m^3/h
- Head: 100 m (10 bar)
- Size selected: 4

1798.55/07-EN

Table 8: Calculation of positive pressure on suction flange:

Calculation of positive pressure on suction flange:	Standard impeller	Special impeller for lower NPSH values
Atmospheric pressure [mWc]	10,3	10,3
Positive pressure (with tank closed)	3,0	3,0
Suction lift	2,0	2,0
Vaporisation pressure [mWc] (see water vaporisation pressure diagram)	-12,5	-12,5
Friction losses in pipes and accessories [mWc]	-1,0	-1,0
Safety margin (min. 0,5 m)	-0,5	-0,5
NPSH pump value at operating point (see characteristic curve of the pump)	-2,1	-0,8
Minimum pressure	-0,8	+0,5
Conclusion	Cavitation will occur.	No cavitation

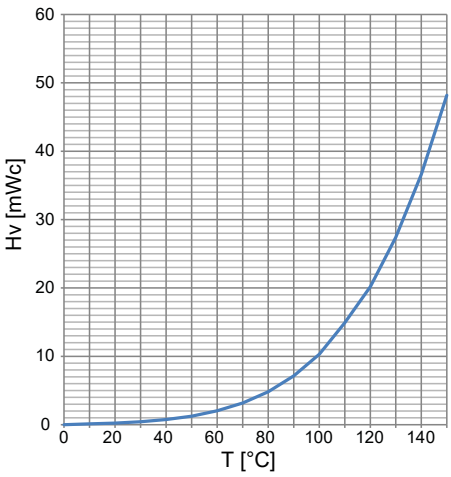

Fig. 2: Vaporisation pressure (H_v) diagram for water

Information about the characteristic curve

NPSH [m], [ft]:

- The NPSH values given in the individual characteristic curves are minimum values which correspond to the cavitation limit.
- A safety margin of at least 0.5 m must be added when selecting the pump to compensate for measuring inaccuracies.
- The NPSH curves reflect average values.
- A safety margin of 0.5 m must be added to the NPSH value of the characteristic curve when selecting a system.

P [kW], [hp]:

- The power input is indicated per stage (St = 1).
  The pump input power can be calculated accordingly.
  Calculation: value indicated in the diagram (St = 1) × number of stages
  Example: Movitec H(S)I 15/4: P = (St = 1) × 4

Fluid handled

The actual operating conditions must always be checked (concentration, temperature, solids content). Penetration of air into the system must be avoided by all means.

If the fluid handled contains solids such as steel chips or steel chip dust, check the permissible particle concentration with KSB.

Minimum flow rate and maximum flow rate

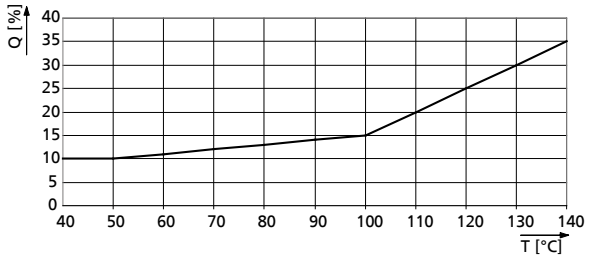

Fig. 3: Minimum flow rate required as a function of fluid temperature at a fluid temperature > +20 °C

Table 9: Minimum flow rate and maximum flow rate Q at a fluid temperature ≤ +20 °C depending on the speed, 50 Hz

Size	Q			
	2900 rpm		1450 rpm	
	Min.	Max.	Min.	Max.
	[m³/h]	[m³/h]	[m³/h]	[m³/h]
2B	0,2	3,3	-	-
4B	0,4	6,5	-	-
6B	0,6	9,0	-	-
10B	1,1	13,2	0,5	6,6
15C	1,9	22,5	0,9	11,3

Table 10: Minimum flow rate and maximum flow rate Q at a fluid temperature ≤ +20 °C depending on the speed, 60 Hz

Size	Q			
	3500 rpm		1750 rpm	
	Min.	Max.	Min.	Max.
	[m³/h]	[m³/h]	[m³/h]	[m³/h]
2B	0,2	4,0	-	-
4B	0,5	7,8	-	-
6B	0,8	10,8	-	-
10B	1,3	15,8	0,6	7,9
15C	2,3	27,0	1,1	13,5

1798.55/07-EN

Overview of product features / selection tables

Overview of fluids handled

The data refer to the chemical resistance of the materials. The relevant regulations / standards governing individual pump applications have to be complied with.
If the operating conditions differ from the data given (e.g. mixed products) or if the fluids handled are not included in the table below, please contact the manufacturer.

- **Temperature ranges:**
  - Reference temperature: +20 °C
  - For temperatures <0 °C: contact the manufacturer.
  - For temperatures > +50 °C: check and observe the vapour pressure of the fluid handled.
  - Max. temperature = +120 °C, unless indicated otherwise.
- Max. concentration = 100 % unless indicated otherwise.
- Mechanical seal silicon carbide / carbon (Q1B): not suitable for fluids containing solid substances. This rule also covers particles developing as a result of salt crystallisation at low fluid temperatures.
- Mechanical seal tungsten carbide / tungsten carbide (U3U3): solids content max. 20 ppm (depending on particle size), with the exception of corrosive fluids. Fluids with a higher solids content are not permitted (ppm = 1 mg/kg).
- Caution: High temperatures will increase corrosion (reference temperature = +20 °C).
- Under unfavourable conditions (high temperatures, deposits, long idle periods), chloride contents of more than 300 mg/l may result in localised corrosion.

Table 11: Symbols key

Symbol	Description
✗	Standard
o	Optional
-	Version not available / not feasible

Table 12: Selecting the design of pump and mechanical seal depending on the fluid to be handled

Fluid handled			Variant																			
			H										HS									
Substance contained	Max. percentage	$T_{max.}$	2-4-6					10-15					2-4-6					10-15				
	[%]	[°C]	Seal code																			
			50	54	55	59	60	51	53	56	58	61	50	54	55	59	60	51	53	56	58	61
Alum, acid-free	≤ 3	+80	-	-	-	-	-	-	-	-	-	-	o	-	-	✗	-	o	-	-	✗	-
Alkaline solution, bottle rinsing, max. 2 % sodium hydroxide	≤ 100	+90	o	-	-	✗	-	o	-	-	✗	-	o	-	-	✗	-	o	-	-	✗	-
Alcohol																						
▪ Butanol	≤ 100	+60	✗	-	-	-	-	✗	-	-	-	-	✗	-	-	-	-	✗	-	-	-	-
▪ Ethanol	≤ 100	+60	✗	-	-	-	-	✗	-	-	-	-	✗	-	-	-	-	✗	-	-	-	-
▪ Propanol	≤ 100	+80	✗	-	-	-	-	✗	-	-	-	-	✗	-	-	-	-	✗	-	-	-	-
▪ Spirits (40 % ethanol)	≤ 100	+40	✗	-	-	-	-	✗	-	-	-	-	✗	-	-	-	-	✗	-	-	-	-
Aluminium sulphate	≤ 5	+60	-	-	-	-	-	-	-	-	-	-	-	-	o	-	✗	-	-	o	-	✗

Fluid handled			Variant																			
			H										HS									
Substance contained	Max. percentage	$T_{max.}$	2-4-6					10-15					2-4-6					10-15				
	[%]	[°C]	Seal code																			
			50	54	55	59	60	51	53	56	58	61	50	54	55	59	60	51	53	56	58	61
Ammonium bicarbonate	≤ 10	+40	o	-	-	✗	-	o	-	-	✗	-	o	-	-	✗	-	o	-	-	✗	-
Ammonium sulphate	≤ 20	+60	-	-	-	✗	-	-	-	-	✗	-	-	-	-	✗	-	-	-	-	✗	-
Calcium acetate	≤ 10	+60	o	-	-	✗	-	o	-	-	✗	-	o	-	-	✗	-	o	-	-	✗	-
Calcium nitrate	≤ 10	+60	o	-	-	✗	-	o	-	-	✗	-	o	-	-	✗	-	o	-	-	✗	-
Ferric sulphate (II)	≤ 5	+5	o	-	-	✗	-	o	-	-	✗	-	o	-	-	✗	-	o	-	-	✗	-
Water-oil emulsion (95 %, 5 %), free of solids	≤ 100	+80	-	-	✗	-	-	-	-	✗	-	-	-	-	✗	-	-	-	-	✗	-	-
Ethylene glycol base anti-freeze, inhibited, closed system	≤ 20	+100	o	-	-	✗	-	o	-	-	✗	-	o	-	-	✗	-	o	-	-	✗	-
	≤ 25	+100	o	-	-	✗	-	o	-	-	✗	-	o	-	-	✗	-	o	-	-	✗	-
	≤ 30	+100	o	-	-	✗	-	o	-	-	✗	-	o	-	-	✗	-	o	-	-	✗	-
	≤ 35	+100	o	-	-	✗	-	o	-	-	✗	-	o	-	-	✗	-	o	-	-	✗	-
	≤ 40	+100	o	-	-	✗	-	o	-	-	✗	-	o	-	-	✗	-	o	-	-	✗	-
	≤ 45	+100	o	-	-	✗	-	o	-	-	✗	-	o	-	-	✗	-	o	-	-	✗	-
	≤ 50	+100	o	-	-	✗	-	o	-	-	✗	-	o	-	-	✗	-	o	-	-	✗	-
Ethylene glycol base anti-freeze, inhibited, open system	≤ 20	+100	o	-	-	✗	-	o	-	-	✗	-	o	-	-	✗	-	o	-	-	✗	-
	≤ 25	+100	o	-	-	✗	-	o	-	-	✗	-	o	-	-	✗	-	o	-	-	✗	-
	≤ 30	+100	o	-	-	✗	-	o	-	-	✗	-	o	-	-	✗	-	o	-	-	✗	-
	≤ 35	+100	o	-	-	✗	-	o	-	-	✗	-	o	-	-	✗	-	o	-	-	✗	-
	≤ 40	+100	o	-	-	✗	-	o	-	-	✗	-	o	-	-	✗	-	o	-	-	✗	-
	≤ 45	+100	o	-	-	✗	-	o	-	-	✗	-	o	-	-	✗	-	o	-	-	✗	-
	≤ 50	+100	o	-	-	✗	-	o	-	-	✗	-	o	-	-	✗	-	o	-	-	✗	-
Wine (white, red)	≤ 100	+60	✗	-	-	-	-	✗	-	-	-	-	✗	-	-	-	-	✗	-	-	-	-
Glycerine	≤ 40	+80	✗	-	✗	✗	✗	✗	-	✗	✗	✗	✗	-	✗	✗	✗	✗	-	✗	✗	✗
Potassium hydroxide	≤ 5	+40	o	-	-	✗	-	o	-	-	✗	-	o	-	-	✗	-	o	-	-	✗	-
Potassium nitrate	≤ 5	+30	o	-	-	✗	-	o	-	-	✗	-	o	-	-	✗	-	o	-	-	✗	-
Potassium sulphate	≤ 3	+20	o	-	✗	-	-	o	-	✗	-	-	o	-	✗	-	-	o	-	✗	-	-
Copper sulphate	≤ 5	+40	o	-	-	✗	-	o	-	-	✗	-	o	-	-	✗	-	o	-	-	✗	-
Magnesium sulphate	≤ 10	+80	o	-	-	✗	-	o	-	-	✗	-	o	-	-	✗	-	o	-	-	✗	-
Sodium carbonate	≤ 6	+60	o	-	-	✗	-	o	-	-	✗	-	o	-	-	✗	-	o	-	-	✗	-
Sodium hydroxide	≤ 5	+60	o	-	-	✗	-	o	-	-	✗	-	o	-	-	✗	-	o	-	-	✗	-
Sodium nitrate	≤ 10	+60	o	-	-	✗	-	o	-	-	✗	-	o	-	-	✗	-	o	-	-	✗	-
Sodium sulphate	≤ 5	+60	o	-	✗	-	-	o	-	✗	-	-	o	-	✗	-	-	o	-	✗	-	-
Oil																						
▪ Cutting oil	≤ 100	+90	-	-	-	-	✗	-	-	-	-	✗	-	-	-	-	✗	-	-	-	-	✗
▪ Peanut oil	≤ 100	+80	-	-	✗	-	o	-	-	✗	-	o	-	-	✗	-	o	-	-	✗	-	o
▪ Linseed oil, ≤ 3 % H_2SO_4	≤ 100	+60	-	-	-	-	-	-	-	-	-	-	-	-	✗	-	o	-	-	✗	-	o

Fluid handled			Variant																			
			H										HS									
Substance contained	Max. percentage	$T_{max.}$	2-4-6					10-15					2-4-6					10-15				
	[%]	[°C]	Seal code																			
			50	54	55	59	60	51	53	56	58	61	50	54	55	59	60	51	53	56	58	61
▪ Linseed oil	≤ 100	+60	-	-	✗	-	o	-	-	✗	-	o	-	-	✗	-	o	-	-	✗	-	o
▪ Corn oil	≤ 100	+80	-	-	✗	-	o	-	-	✗	-	o	-	-	✗	-	o	-	-	✗	-	o
▪ Olive oil	≤ 100	+80	-	-	✗	-	o	-	-	✗	-	o	-	-	✗	-	o	-	-	✗	-	o
▪ Rapeseed oil	≤ 100	+80	-	-	✗	-	o	-	-	✗	-	o	-	-	✗	-	o	-	-	✗	-	o
▪ Soybean oil	≤ 100	+100	-	-	✗	-	o	-	-	✗	-	o	-	-	✗	-	o	-	-	✗	-	o
Kerosene	≤ 100	+80	-	-	✗	-	o	-	-	✗	-	o	-	-	✗	-	o	-	-	✗	-	o
Juice (fruit and sugar juice)	≤ 100	+60	o	-	✗	-	-	o	-	✗	-	-	o	-	✗	-	-	o	-	✗	-	-
Acid																						
▪ Citric acid	≤ 25	+30	-	-	o	-	✗	-	-	o	-	✗	-	-	o	-	✗	-	-	o	-	✗
▪ Citric acid	≤ 10	+30	-	-	o	-	✗	-	-	o	-	✗	-	-	o	-	✗	-	-	o	-	✗
▪ Acetic acid	≤ 10	+60	-	-	-	✗	-	-	-	-	✗	-	-	-	-	✗	-	-	-	-	✗	-
▪ Acetic acid	≤ 5	+60	o	-	-	✗	-	o	-	-	✗	-	o	-	-	✗	-	o	-	-	✗	-
▪ Tannic acid	≤ 20	+80	-	-	-	-	✗	-	-	-	-	✗	-	-	-	-	✗	-	-	-	-	✗
▪ Maleic acid	≤ 10	+60	-	-	o	-	✗	-	-	o	-	✗	-	-	o	-	✗	-	-	o	-	✗
▪ Lactic acid	≤ 40	+60	-	-	✗	-	o	-	-	✗	-	o	-	-	✗	-	o	-	-	✗	-	o
▪ Phosphoric acid	≤ 5	+20	o	-	-	✗	-	o	-	-	✗	-	o	-	-	✗	-	o	-	-	✗	-
▪ Sulphuric acid	≤ 5	+20	o	-	-	✗	-	o	-	-	✗	-	o	-	-	✗	-	o	-	-	✗	-
▪ Tartaric acid	≤ 8	+40	o	-	✗	-	-	o	-	✗	-	-	o	-	✗	-	-	o	-	✗	-	-
Fuel																						
▪ Diesel oil	≤ 100	+80	-	-	✗	-	-	-	-	✗	-	-	✗	-	✗	-	-	-	-	-	-	-
▪ Fuel oil	≤ 100	+80	-	-	✗	-	-	-	-	✗	-	-	✗	-	✗	-	-	-	-	-	-	-
▪ Jet fuel	≤ 100	+80	-	-	✗	-	-	-	-	✗	-	-	✗	-	✗	-	-	-	-	-	-	-
Trisodium phosphate	≤ 4	+80	-	-	o	-	✗	-	-	o	-	✗	-	-	o	-	✗	-	-	o	-	✗
Water																						
▪ Clean water	≤ 100	+100	✗	✗	-	-	-	✗	✗	-	-	-	✗	✗	-	-	-	✗	✗	-	-	-
▪ Clean water	≤ 100	+140	✗	-	-	-	-	✗	-	-	-	-	✗	-	-	-	-	✗	-	-	-	-
▪ Deionised water (fully desalinated)	≤ 100	+100	✗	✗	-	-	-	✗	✗	-	-	-	✗	✗	-	-	-	✗	✗	-	-	-
▪ Deionised water (fully desalinated)	≤ 100	+140	✗	-	-	-	-	✗	-	-	-	-	✗	-	-	-	-	✗	-	-	-	-

Fluid handled			Variant																			
			H										HS									
Substance contained	Max. percentage	$T_{max.}$	2-4-6					10-15					2-4-6					10-15				
	[%]	[°C]	Seal code																			
			50	54	55	59	60	51	53	56	58	61	50	54	55	59	60	51	53	56	58	61
▪ Permeate (osmosis)	≤ 100	+100	✗	✗	-	-	-	✗	✗	-	-	-	✗	✗	-	-	-	✗	✗	-	-	-
▪ Permeate (osmosis)	≤ 100	+140	✗	-	-	-	-	✗	-	-	-	-	✗	-	-	-	-	✗	-	-	-	-
▪ Decarbonised water	≤ 100	+100	✗	✗	-	-	-	✗	✗	-	-	-	✗	✗	-	-	-	✗	✗	-	-	-
▪ Decarbonised water	≤ 100	+120	✗	-	-	-	-	✗	-	-	-	-	✗	-	-	-	-	✗	-	-	-	-
▪ Partly desalinated water	≤ 100	+100	✗	✗	-	-	-	✗	✗	-	-	-	✗	✗	-	-	-	✗	✗	-	-	-
▪ Partly desalinated water	≤ 100	+120	✗	-	-	-	-	✗	-	-	-	-	✗	-	-	-	-	✗	-	-	-	-
▪ Dealkalised water	≤ 100	+100	✗	✗	-	-	-	✗	✗	-	-	-	✗	✗	-	-	-	✗	✗	-	-	-
▪ Dealkalised water	≤ 100	+120	✗	-	-	-	-	✗	-	-	-	-	✗	-	-	-	-	✗	-	-	-	-
▪ Fire-fighting water	≤ 100	+60	✗	✗	-	-	-	✗	✗	-	-	-	✗	✗	-	-	-	✗	✗	-	-	-
▪ High-temperature hot water treated in accordance with VdTüV 1466	≤ 100	+140	✗	-	-	-	-	✗	-	-	-	-	✗	-	-	-	-	✗	-	-	-	-
▪ Heating water in accordance with VDI 2035	≤ 100	+100	✗	-	-	-	-	✗	-	-	-	-	✗	-	-	-	-	✗	-	-	-	-
▪ Boiler feed water to VdTÜV 1466	≤ 100	+140	✗	o	-	-	-	✗	o	-	-	-	✗	o	-	-	-	✗	o	-	-	-
▪ Condensate treated in acc. with VdTÜV 1466	≤ 100	+140	✗	-	-	-	-	✗	-	-	-	-	✗	-	-	-	-	✗	-	-	-	-
▪ Vapour condensate (brewery)	≤ 5	+140	✗	-	-	-	-	✗	-	-	-	-	✗	-	-	-	-	✗	-	-	-	-
▪ Cooling water	≤ 100	+80	o	-	-	✗	-	o	-	-	✗	-	o	-	-	✗	-	o	-	-	✗	-
▪ Seawater	≤ 100	+15	-	-	-	-	-	-	-	-	-	-	o	-	-	✗	-	o	-	-	✗	-
▪ Brackish water	≤ 100	+15	-	-	-	-	-	-	-	-	-	-	o	-	-	✗	-	o	-	-	✗	-
▪ River water	≤ 100	+60	o	-	-	✗	-	o	-	-	✗	-	o	-	-	✗	-	o	-	-	✗	-
▪ Surface water	≤ 100	+60	o	-	-	✗	-	o	-	-	✗	-	o	-	-	✗	-	o	-	-	✗	-
▪ Lake water (fresh water)	≤ 100	+60	o	-	-	✗	-	o	-	-	✗	-	o	-	-	✗	-	o	-	-	✗	-
▪ Dam water	≤ 100	+60	o	-	-	✗	-	o	-	-	✗	-	o	-	-	✗	-	o	-	-	✗	-
▪ Rinsing water / without particles of oil or acids, lyes	≤ 100	+70	o	✗	-	-	-	o	✗	-	-	-	o	✗	-	-	-	o	✗	-	-	-
▪ Barrier water	≤ 100	+70	o	✗	-	-	-	o	✗	-	-	-	o	✗	-	-	-	o	✗	-	-	-
▪ Rainwater, with strainer	≥ 20	+60	o	-	-	✗	-	o	-	-	✗	-	o	-	-	✗	-	o	-	-	✗	-
▪ Raw water	≤ 100	+60	o	-	-	✗	-	o	-	-	✗	-	o	-	-	✗	-	o	-	-	✗	-

Fluid handled			Variant																			
			H										HS									
Substance contained	Max. percentage	$T_{max.}$	2-4-6					10-15					2-4-6					10-15				
	[%]	[°C]	Seal code																			
			50	54	55	59	60	51	53	56	58	61	50	54	55	59	60	51	53	56	58	61
▪ Grey water, slightly contaminated water without particles, e.g. sand	≤ 100	+60	-	-	-	✗	-	-	-	-	✗	-	-	-	-	✗	-	-	-	-	✗	-
▪ Fresh water	≤ 100	+60	-	-	-	-	-	-	-	-	-	-	o	-	✗	-	-	o	-	✗	-	-
▪ Tap water (WRAS(ACS/NSF)/UBA)	≤ 100	+100	o	✗	-	-	-	o	✗	-	-	-	o	✗	-	-	-	o	✗	-	-	-

Shaft seal

Table 13: Available mechanical seals

Seal code	Type	Material				Unpressurised shaft seal	T		Elastomer material of pump
		Mechanical seal	Shaft seal				Min.	Max.	
			Rotor	Stator	Elastomer		[°C]	[°C]	
50	RMG12-G6	A Q7 E GG	Ca	eSiC	EPDM	PN25(PN18)	-20	+120 (+140)	EPDM 559236
51	eRMG12-G6	A Q7 E GG Y10	Ca	eSiC	EPDM	PN25	-20	+120 (+140)	EPDM
53	eMG12-G6	B Q7 E GG Y10 WA	Ca	eSiC	EPDM	PN25	-20	+100	EPDM
54	MG12-G6	B Q7 E GG WA	Ca	eSiC	FPM	PN25	-20	+100	EPDM
55	RMG12-G6	B Q7 V GG	Ca	eSiC	FPM	PN25	-20	+120	FPM
56	eRMG12-G6	B Q7 V GG Y10	Ca	eSiC	FPM	PN25	-20	+120	FPM
58	eMG12-G6	Q7 Q7 E GG Y10 WA	eSiC	eSiC	EPDM	PN18	-20	+100	EPDM
59	MG12-G6	Q7 Q7 E GG WA	eSiC	eSiC	EPDM	PN18	-20	+100	EPDM
60	RMG12-G6	Q7 Q7 V GG	eSiC	eSiC	FPM	PN18	-20	+120	FPM
61	eRMG12-G6	Q7 Q7 V GG Y10	eSiC	eSiC	FPM	PN18	-20	+120	FPM

Table 14: Key to mechanical seal materials

Description	Code	Code to EN 12756	Material	Note
Primary ring	Ca	A	Carbon graphite	Antimony-impregnated
	eCarb-B	B	Carbon graphite	Resin-impregnated, porous
	eSiC-Q7	Q7	Silicon carbide	Porous
Mating ring	eSiC-Q7	Q7	Silicon carbide	Porous
Elastomer	EPDM	E	Ethylene propylene rubber	
	FPM	V	Fluorocarbon nitrile rubber	
Spring	AISI 316	G	CrNiMo steel	
	AISI 304	F	CrNi steel	
Other metal parts	AISI 316	G	CrNiMo steel	
	AISI 304	F	CrNi steel	

Technical data

Motors

- Efficiency class IE3 to IEC 60034-30 (for three-phase motors ≥ 0.75 kW)

Table 15: Technical motor data, 50 Hz

P_N	V_N	I_A	I_A/I_N	cos φ	Tolerance V_N	n	η	L_p	Cable gland	Maximum frequency of starts
[kW]	[V]	[A]			[%]	rpm	[%]	[dB]		[/h]
0,37	1 × 230	2,60	3,7	0,92	+/-10	2750	67,00	58	1 × M18 × 1,5	20
0,55	1 × 230	3,69	3,9	0,92	+/-10	2760	70,00	56	1 × M18 × 1,5	20
0,75	1 × 230	5,00	3,9	0,92	+/-10	2780	70,00	56	1 × M20 × 1,5	20
1,10	1 × 230	6,68	4,3	0,95	+/-10	2790	75,00	58	1 × M20 × 1,5	20
1,50	1 × 230	8,99	4,8	0,95	+/-10	2800	76,00	58	1 × M20 × 1,5	20
2,20	1 × 230	13,04	4,8	0,95	+/-10	2800	77,00	58	1 × M20 × 1,5	20
0,37	230/400	1,64/0,94	5,5	0,78	+/-10	2750	74,20	64	1 × M20 × 1,5	20
0,55	230/400	2,31/1,33	5,2	0,75	+/-10	2790	77,60	58	1 × M20 × 1,5	20
0,75	230/400	2,92/1,68	6,8	0,80	+/-10	2855	80,50	60	2 × M20 × 1,5	25
1,10	230/400	4,17/2,40	7,0	0,80	+/-10	2855	82,70	60	2 × M25 × 1,5	25
1,50	230/400	5,08/2,92	7,7	0,88	+/-10	2900	84,20	63	2 × M25 × 1,5	25
2,20	230/400	7,22/4,15	7,7	0,89	+/-10	2900	86,00	63	2 × M25 × 1,5	25
3,00	230/400	9,71/5,59	8,8	0,89	+/-10	2910	87,10	63	2 × M25 × 1,5	20
3,00	400/690	5,59/3,24	8,8	0,89	+/-10	2910	87,10	63	2 × M25 × 1,5	20
4,00	230/400	13,00/7,45	8,5	0,88	+/-10	2910	88,10	63	2 × M25 × 1,5	20
4,00	400/690	7,45/4,32	8,5	0,88	+/-10	2910	88,10	63	2 × M25 × 1,5	20
5,50	230/400	17,40/10,00	8,8	0,89	+/-10	2925	89,20	68	2 × M32 × 1,5	20
5,50	400/690	10,00/5,80	8,8	0,89	+/-10	2925	89,20	68	2 × M32 × 1,5	20
7,50	230/400	23,20/13,40	8,8	0,90	+/-10	2925	89,80	68	2 × M32 × 1,5	20
7,50	400/690	13,40/7,74	8,8	0,90	+/-10	2925	89,80	68	2 × M32 × 1,5	20
0,55	230/400	2,34/1,34	5,3	0,73	+/-10	1425	80,70	57	1 × M20 × 1,5	20
0,75	230/400	3,13/1,80	6,5	0,73	+/-10	1425	82,50	57	1 × M20 × 1,5	20
1,10	230/400	4,21/2,42	6,5	0,78	+/-10	1440	84,40	58	1 × M20 × 1,5	20
1,50	230/400	5,59/3,21	7,0	0,79	+/-10	1440	85,30	58	1 × M25 × 1,5	20
2,20	230/400	7,86/4,52	7,5	0,81	+/-10	1445	86,70	59	2 × M25 × 1,5	20
3,00	230/400	10,60/6,10	7,5	0,81	+/-10	1445	87,70	59	2 × M25 × 1,5	20
3,00	400/690	6,10/3,53	7,5	0,81	+/-10	1445	87,70	59	2 × M25 × 1,5	20
4,00	230/400	14,00/8,05	8,5	0,81	+/-10	1450	88,50	60	2 × M25 × 1,5	20
4,00	400/690	8,05/4,66	8,5	0,81	+/-10	1450	88,60	60	2 × M25 × 1,5	20
5,50	230/400	19,00/10,90	8,5	0,81	+/-10	1460	89,90	60	2 × M32 × 1,5	20
5,50	400/690	10,90/6,34	8,5	0,81	+/-10	1460	89,60	60	2 × M32 × 1,5	20
7,50	230/400	25,40/14,60	8,5	0,82	+/-10	1460	90,40	60	2 × M32 × 1,5	20
7,50	400/690	14,60/8,47	8,5	0,82	+/-10	1460	90,40	60	2 × M32 × 1,5	20

Table 16: Technical motor data, 60 Hz

P_N	V_N	I_A	I_A/I_N	cos φ	Tolerance V_N	n	η	L_p	Cable gland	Maximum frequency of starts
[kW]	[V]	[A]			[%]	[rpm]	[%]	[dB]		[h^{-1}]
0,37	230/400	1,54/0,89	6,00	0,79	+20/-5	3300	75,70	67	1 × M20 × 1,5	20
0,55	230/400	2,29/1,32	4,40	0,76	+20/ -5	3345	79,10	58	1 × M20 × 1,5	20
0,75	230/400	2,94/1,69	7,40	0,79	+20/-5	3450	81,10	58	1 × M20 × 1,5	20
1,10	230/400	4,14/2,38	5,80	0,80	+20/-5	3450	83,30	58	1 × M20 × 1,5	20
1,50	230/400	4,98/2,86	6,20	0,89	+20/-5	3480	85,00	58	1 × M25 × 1,5	20
2,20	230/400	7,14/4,11	6,20	0,90	+20/-5	3480	85,90	60	1 × M25 × 1,5	20
3,00	230/400	9,51/5,47	7,50	0,91	+20/-5	3480	87,00	62	2 × M25 × 1,5	20
3,00	400/690	5,47/3,17	7,50	0,91	+20/-5	3480	87,00	62	2 × M25 × 1,5	20
4,00	230/400	12,49/7,18	7,20	0,90	+20/-5	3500	89,30	64	2 × M25 × 1,5	20
4,00	400/690	7,18/4,16	7,20	0,90	+20/-5	3500	89,30	64	2 × M25 × 1,5	20
5,50	230/400	17,22/9,90	6,40	0,90	+20/-5	3510	89,10	68	2 × M32 × 1,5	20
5,50	400/690	9,90/5,74	6,40	0,90	+20/-5	3510	89,10	68	2 × M32 × 1,5	20
7,50	230/400	23,29/13,29	6,40	0,90	+20/-5	3510	89,80	68	2 × M32 × 1,5	20
7,50	400/690	13,39/7,76	6,40	0,90	+20/-5	3510	89,80	68	2 × M32 × 1,5	20

P_N	V_N	I_A	I_A/I_N	cos φ	Tolerance V_N	n	η	L_p	Cable gland	Maximum frequency of starts
[kW]	[V]	[A]			[%]	[rpm]	[%]	[dB]		[h^{-1}]
0,55	230/400	2,30/1,32	4,50	0,74	+20/-5	1710	81,00	57	1 × M20 × 1,5	20
0,75	230/400	3,04/1,75	6,30	0,75	+20/-5	1710	82,60	56	1 × M20 × 1,5	20
1,10	230/400	4,10/2,36	7,50	0,80	+20/-5	1735	84,10	58	1 × M20 × 1,5	20
1,50	230/400	5,52/3,17	7,30	0,80	+20/-5	1735	85,30	58	1 × M25 × 1,5	20
2,20	230/400	8,06/4,64	7,20	0,79	+20/-5	1720	86,70	57	2 × M25 × 1,5	20
3,00	230/400	10,14/5,86	7,20	0,83	+20/-5	1720	87,90	57	2 × M25 × 1,5	20
3,00	400/690	6,25/3,62	7,20	0,79	+20/-5	1720	87,70	57	2 × M25 × 1,5	20
4,00	230/400	13,23/7,76	5,95	0,84	+20/-5	1745	88,60	60	2 × M25 × 1,5	20
4,00	400/690	7,76/4,50	5,95	0,84	+20/-5	1745	88,60	60	2 × M25 × 1,5	20
5,50	230/400	24,74/14,23	5,95	0,83	+20/-5	1746	90,98	62	2 × M32 × 1,5	20
5,50	400/690	10,69/6,20	5,95	0,83	+20/-5	1750	89,50	62	2 × M32 × 1,5	20
7,50	230/400	24,70/14,26	5,95	0,84	+20/-5	1750	90,40	62	2 × M32 × 1,5	20
7,50	400/690	14,26/8,26	5,95	0,84	+20/-5	1750	90,40	62	2 × M32 × 1,5	20

1798.55/07-EN

Selection chart

Movitec H(S)I, n = 2900 rpm

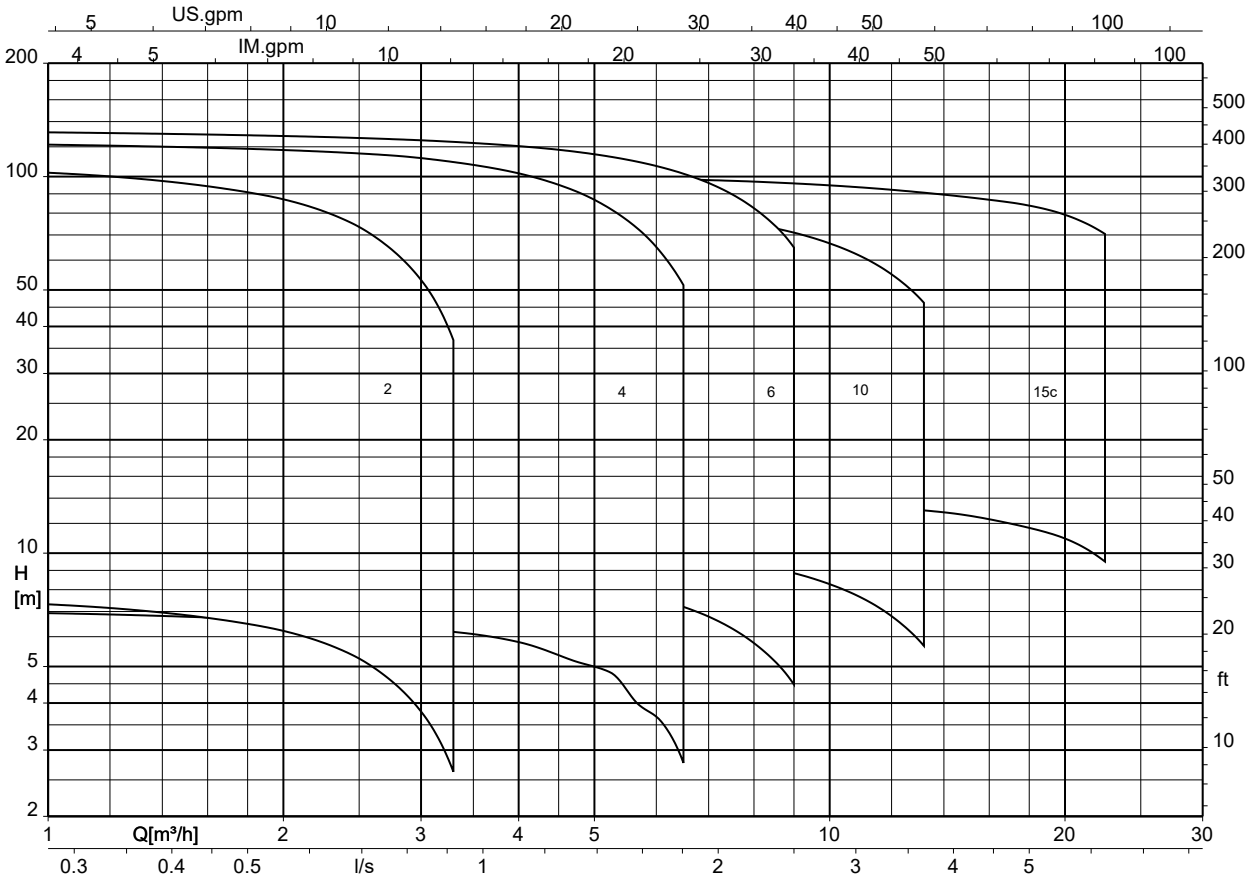

1798.55/07-EN

Movitec H(S)I, n = 1450 rpm

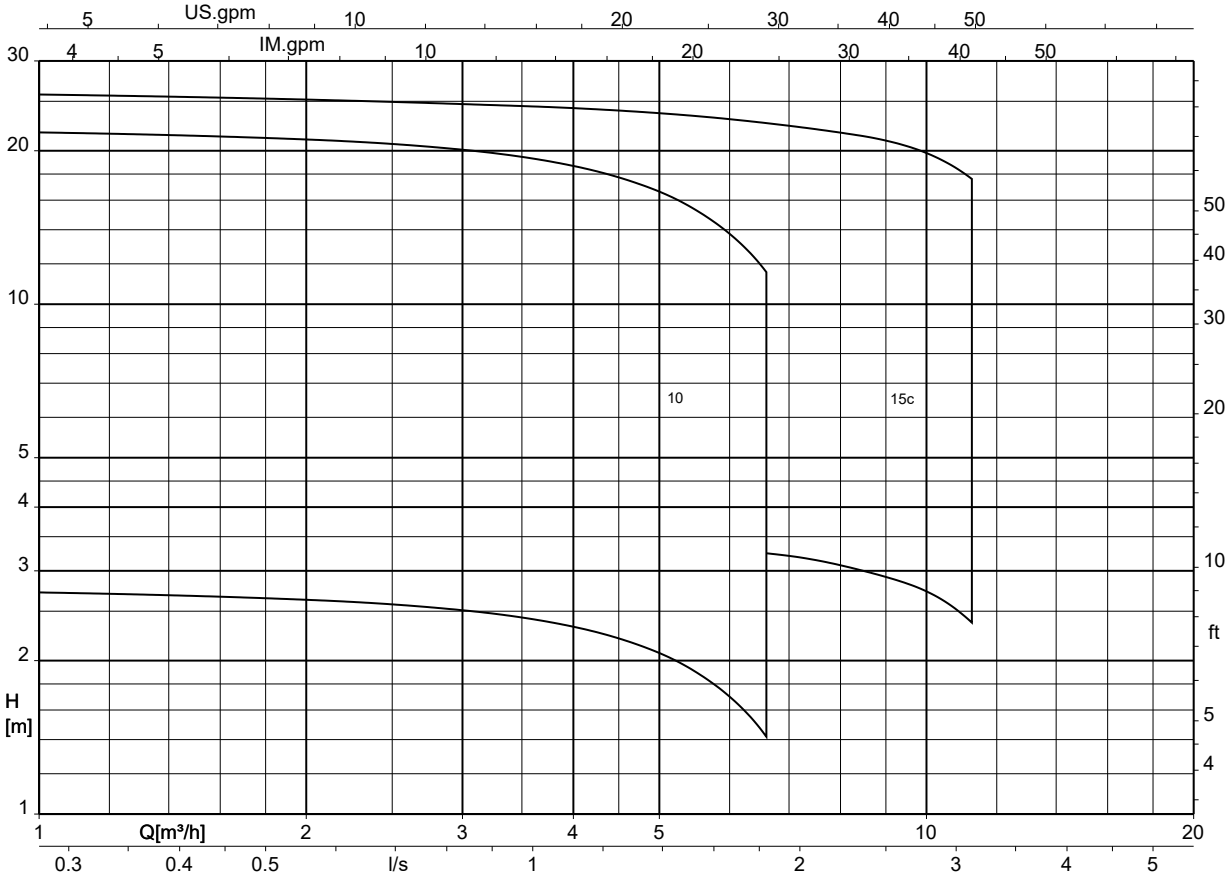

Movitec H(S)I, n = 3500 rpm

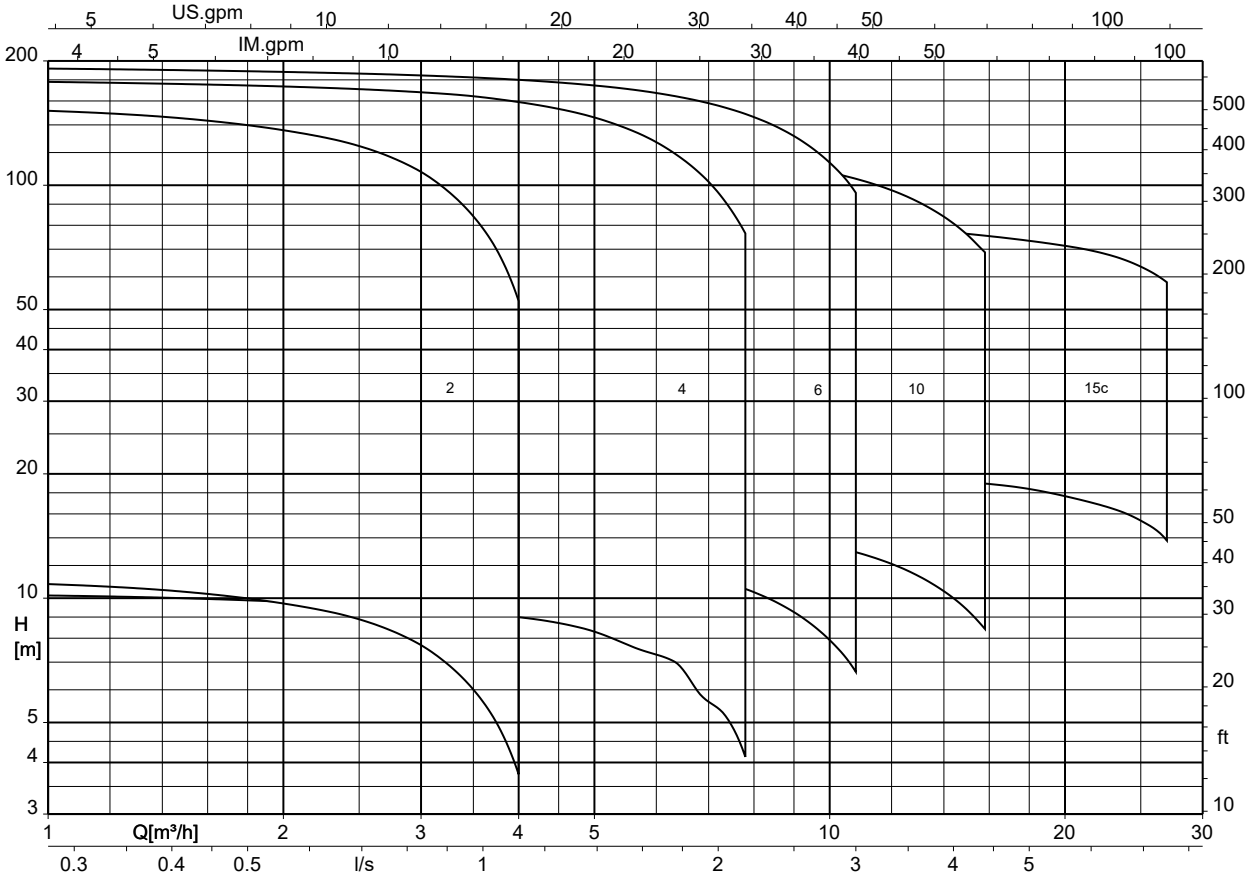

Movitec H(S)I, n = 1750 rpm

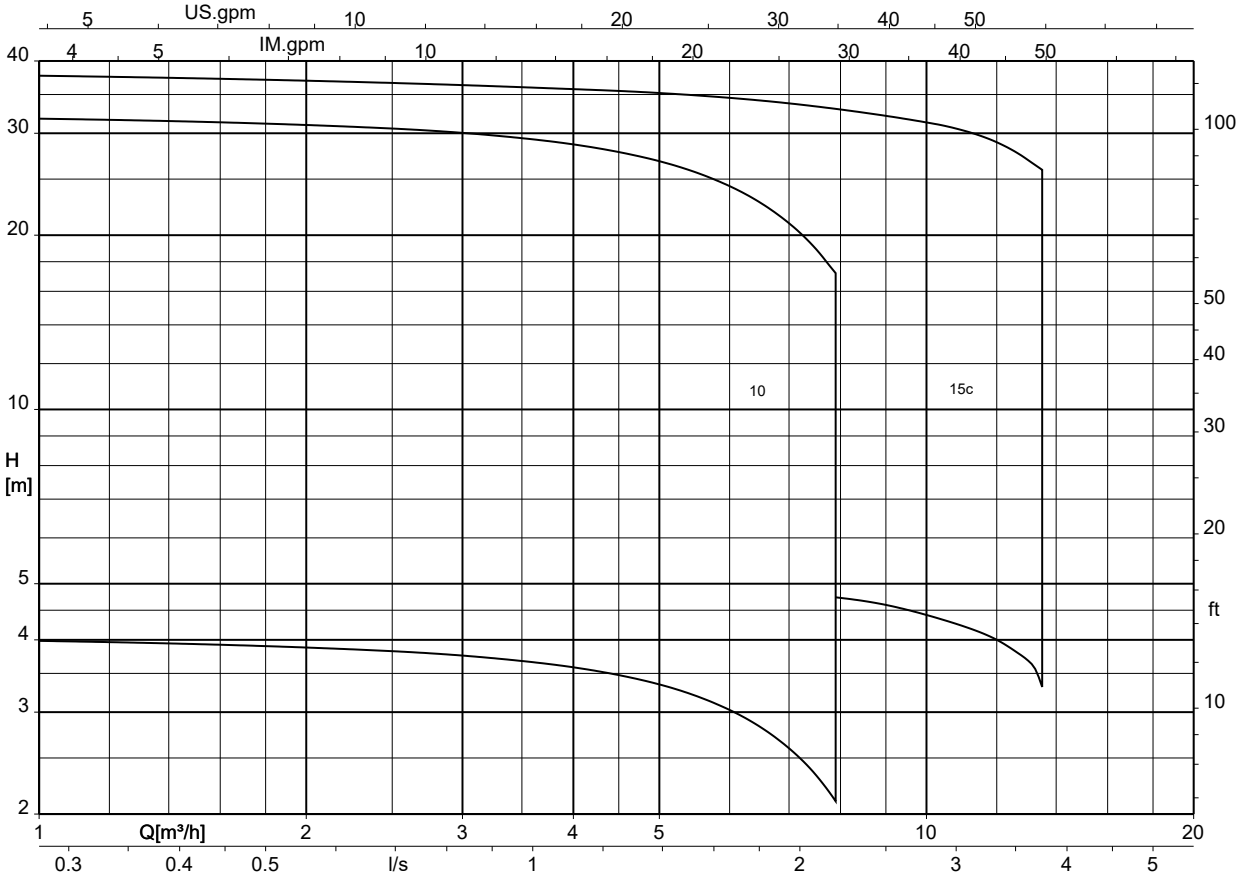

Characteristic curves

The characteristic curves are based on the following principles:

- Tolerances to ISO 9906:2012 Grade 3B

The characteristic curves were measured under the following conditions:

- Motor used:
  - Standardised KSB motor with integrated frequency inverter
- Fluid properties:
  - Deaerated water
  - Fluid temperature: +20 °C
  - Density: 1.0 kg/dm³
  - Kinematic viscosity: 1 mm²/s

1798.55/07-EN

n = 2900 rpm

Movitec H(S)I, 2B, n = 2900 rpm

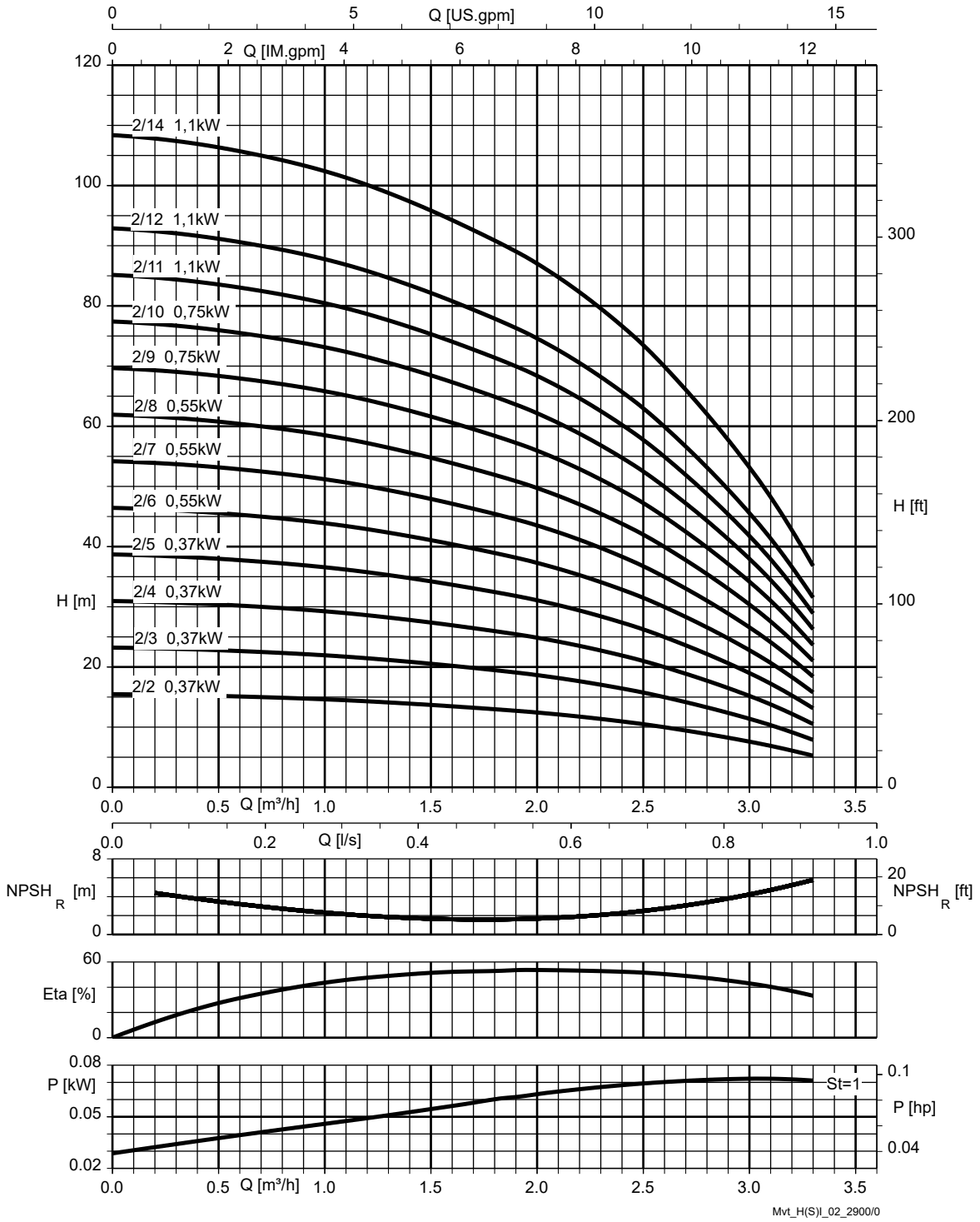

St = 1	P per stage

1798.55/07-EN

Movitec H(S)I, 2-LB, n = 2900 rpm

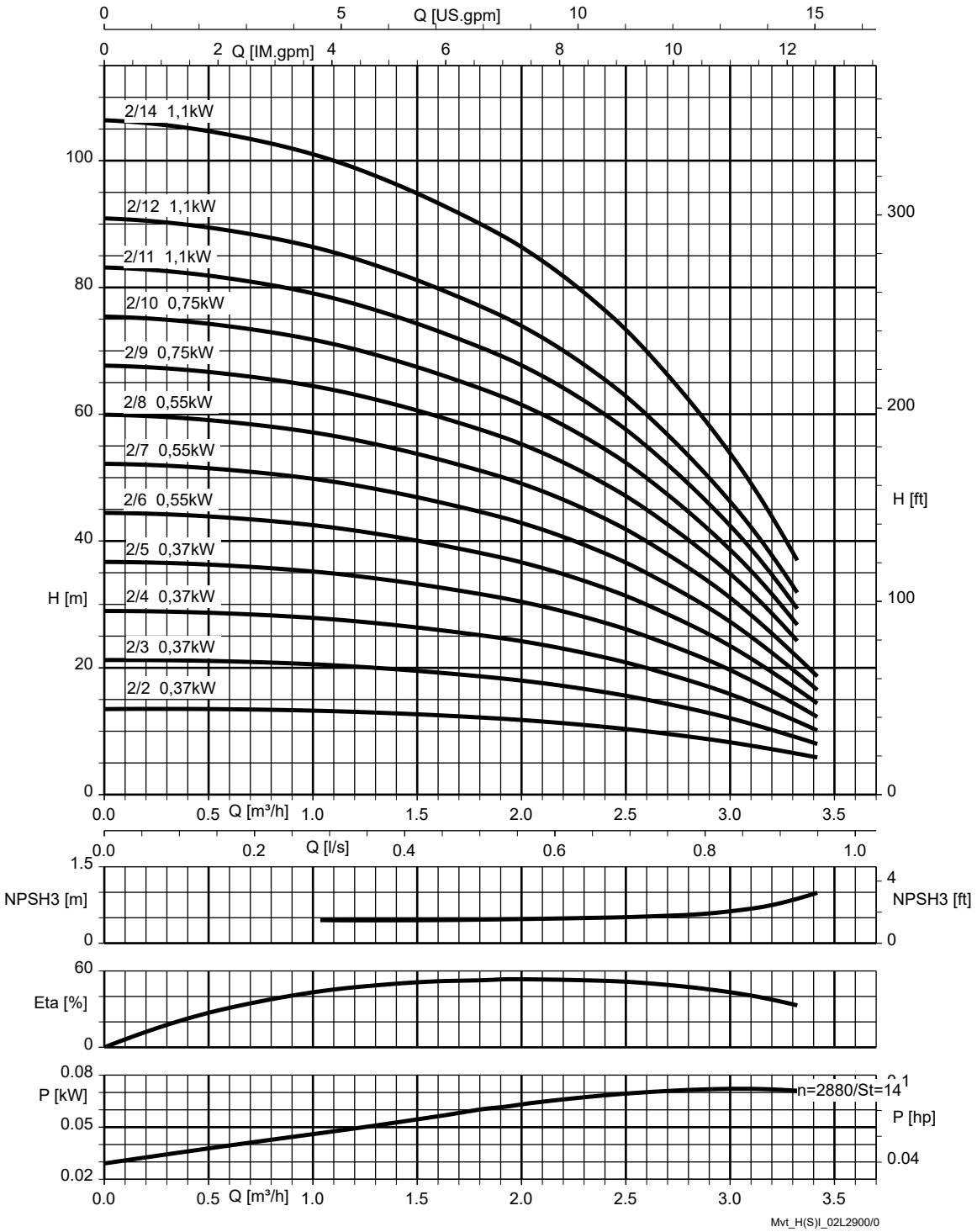

St = 1	P per stage

1798.55/07-EN

Movitec H(S)I, 4B, n = 2900 rpm

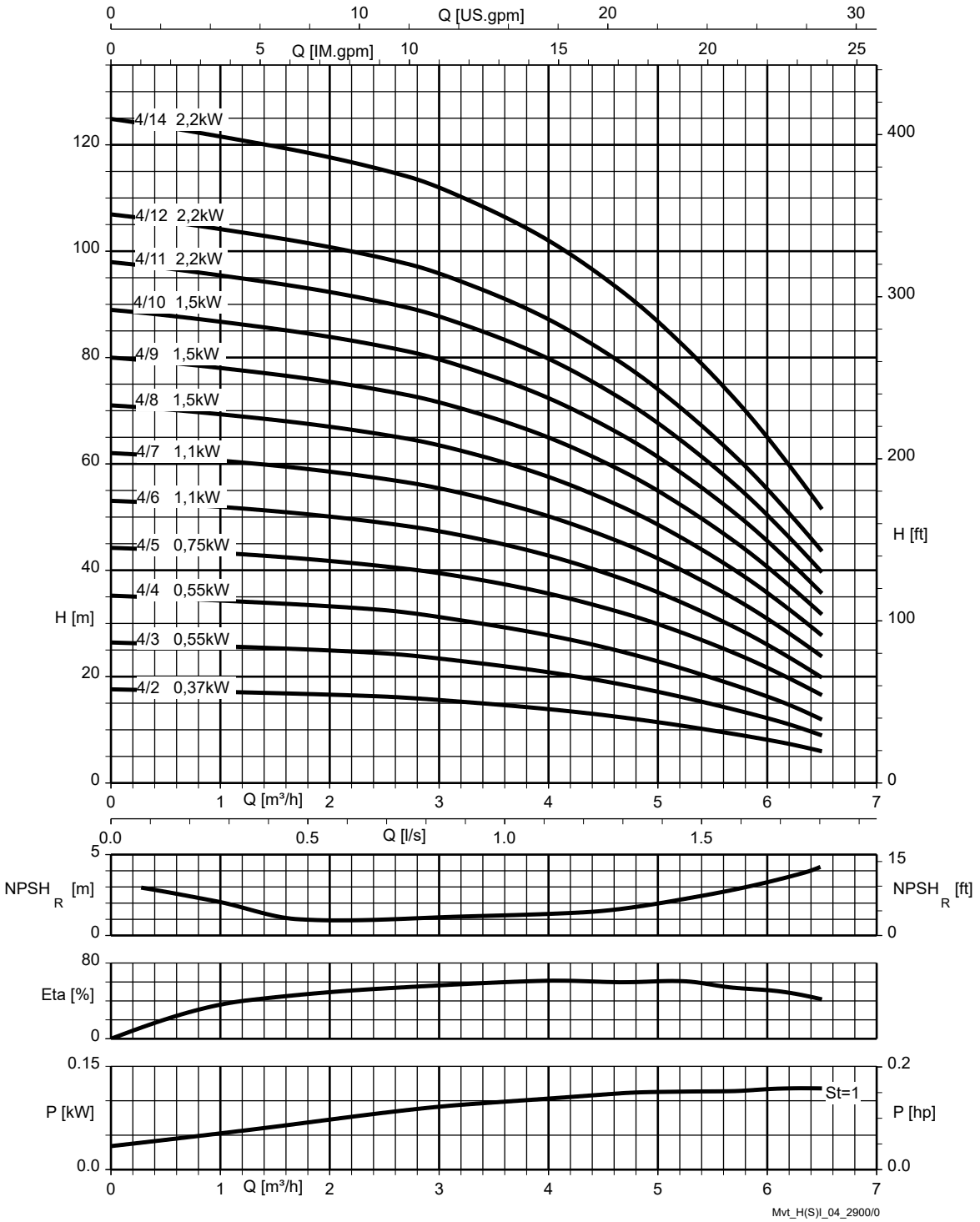

St = 1	P per stage

1798.55/07-EN

Movitec H(S)I, 4-LB, n = 2900 rpm

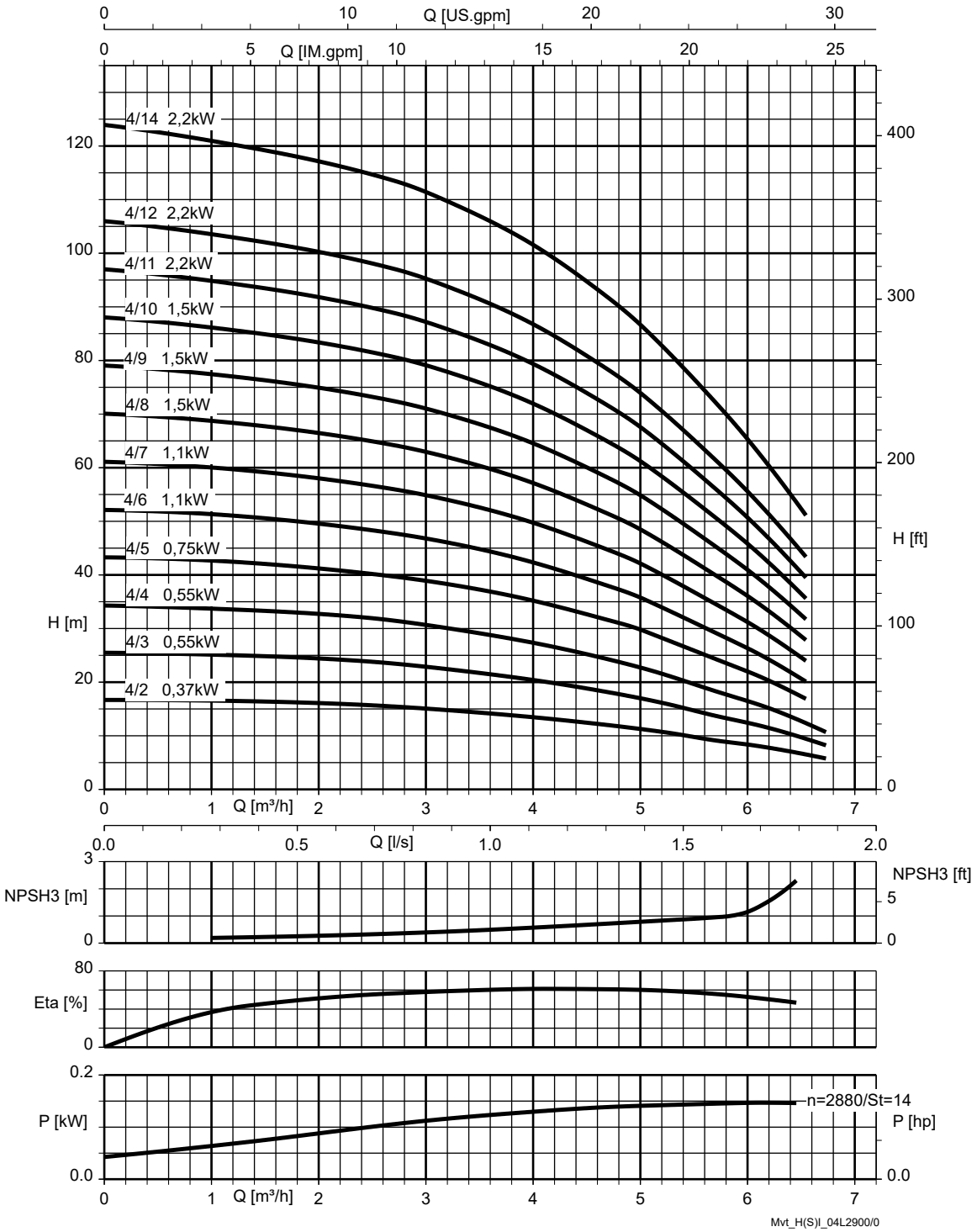

St = 1	P per stage

1798.55/07-EN

Movitec H(S)I, 6B, n = 2900 rpm

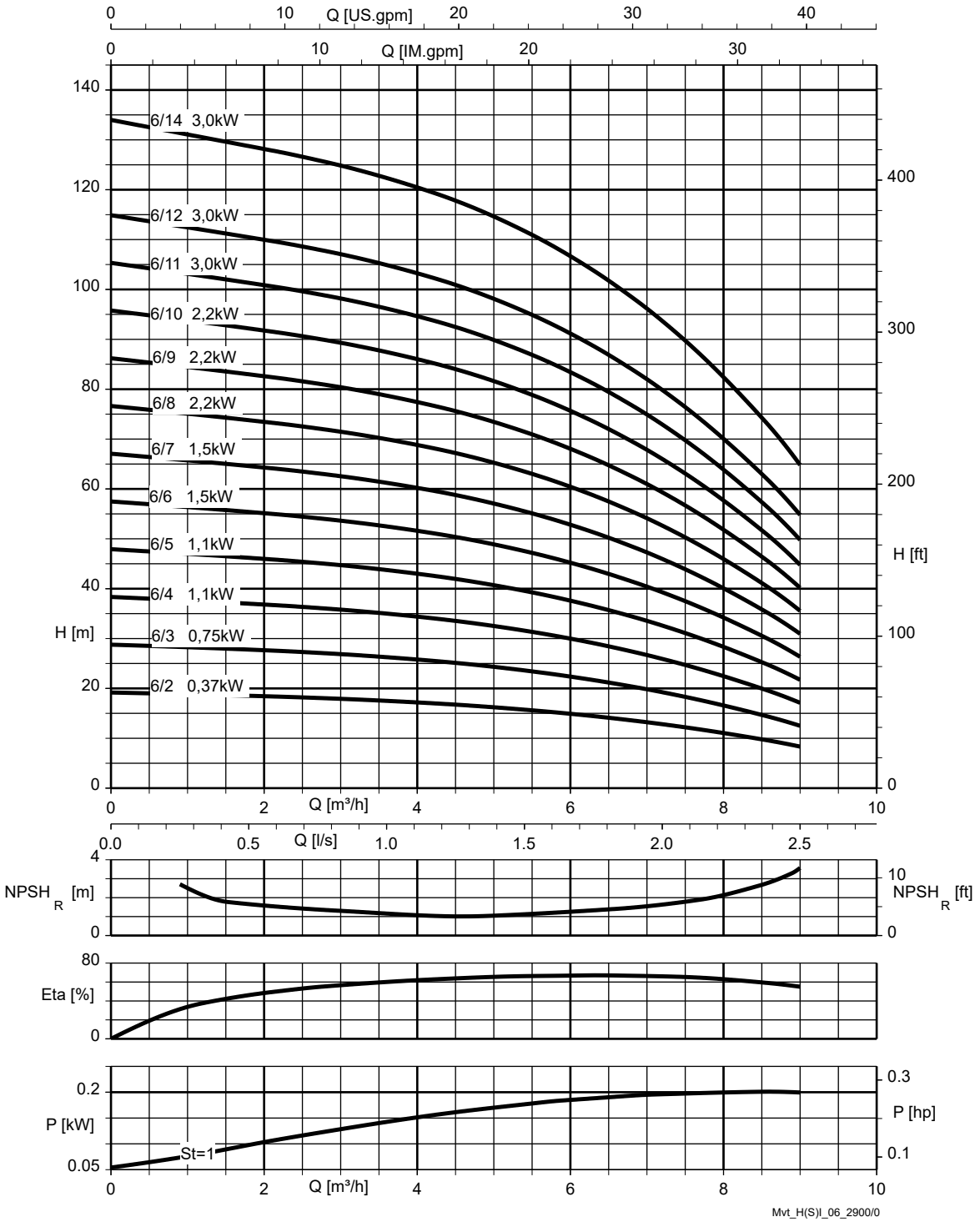

St = 1	P per stage

1798.55/07-EN

Movitec H(S)I, 6-LB, n = 2900 rpm

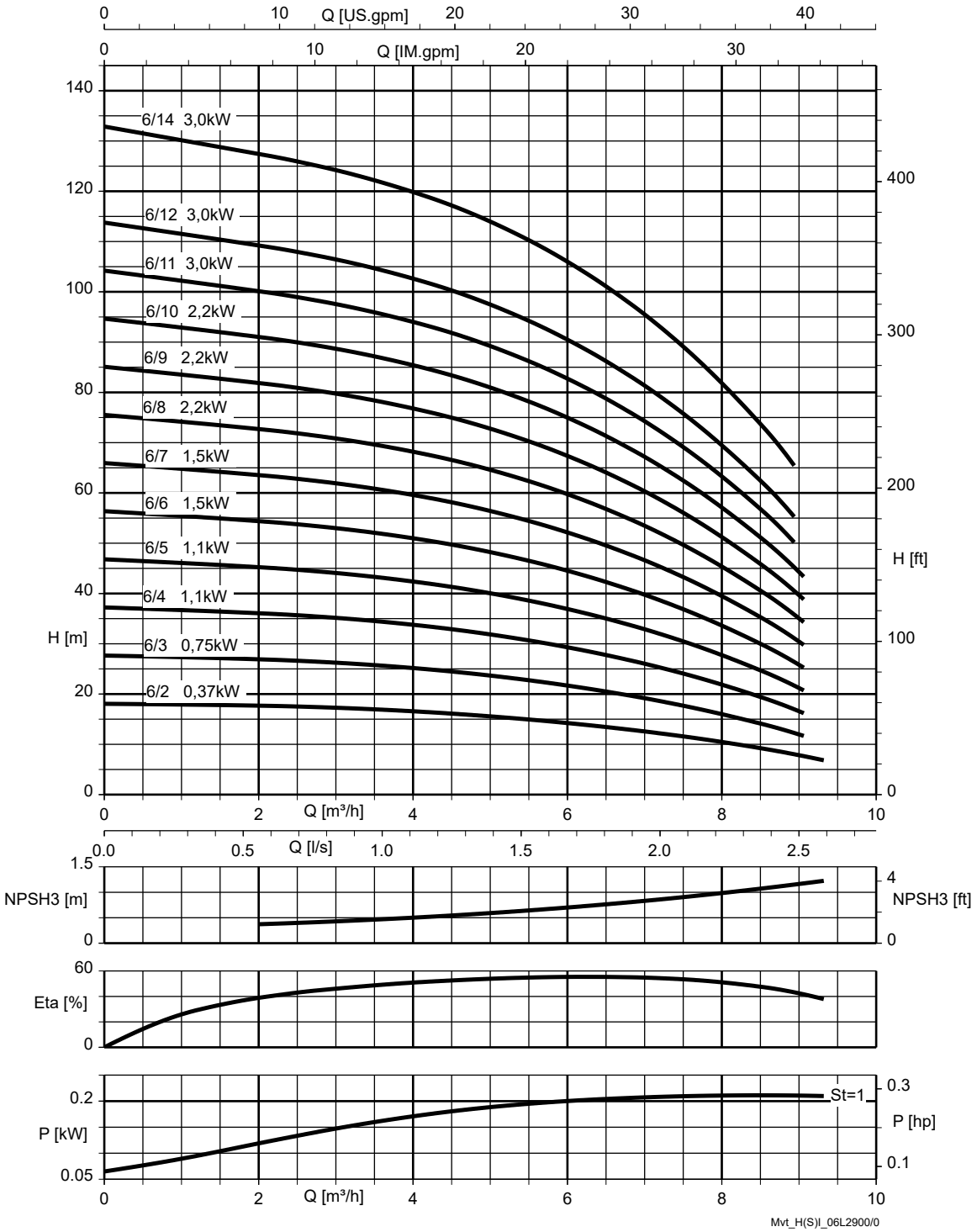

St = 1	P per stage

1798.55/07-EN

Movitec H(S)I, 10B, n = 2900 rpm

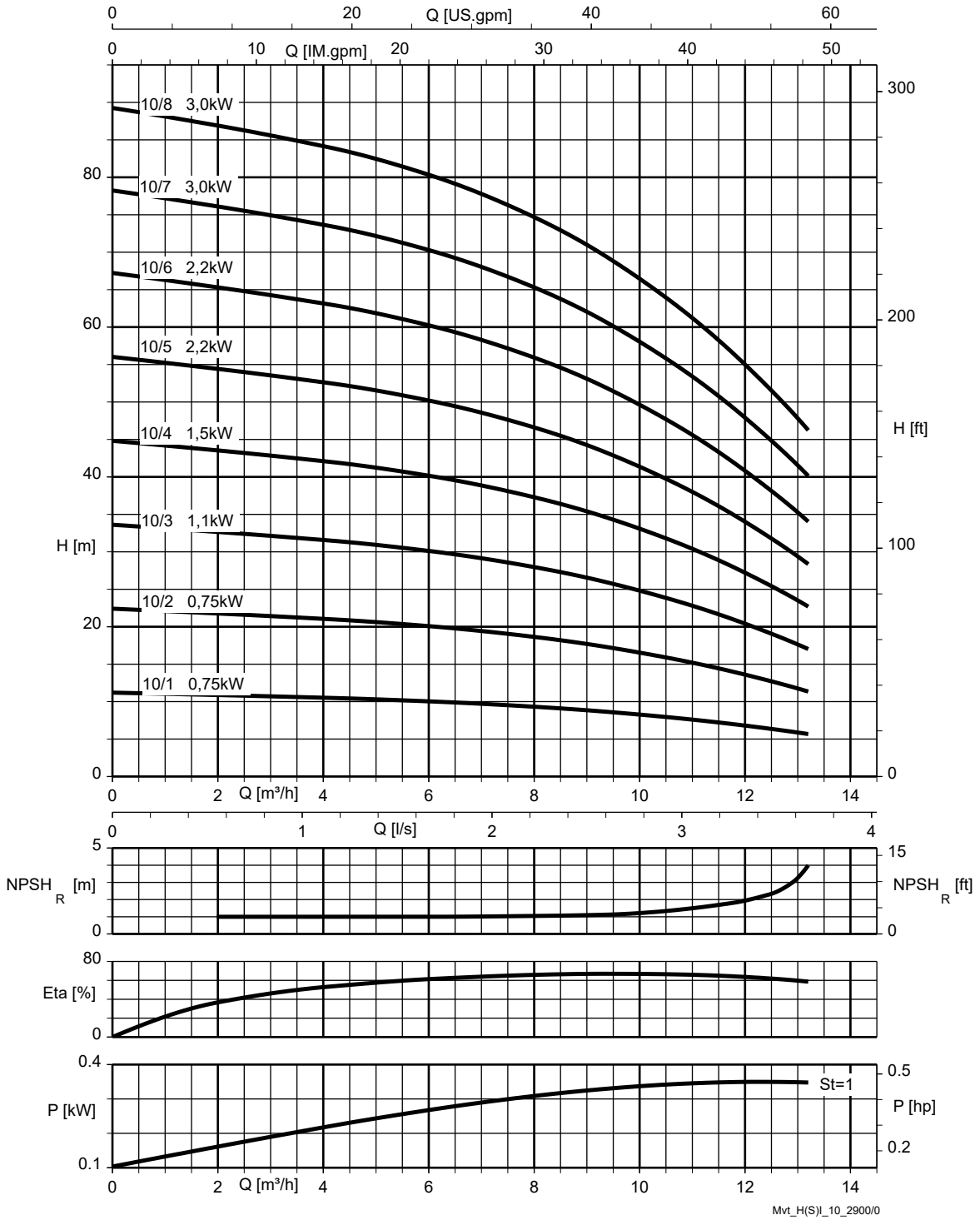

St = 1	P per stage

1798.55/07-EN

Movitec H(S)I, 10-LB, n = 2900 rpm

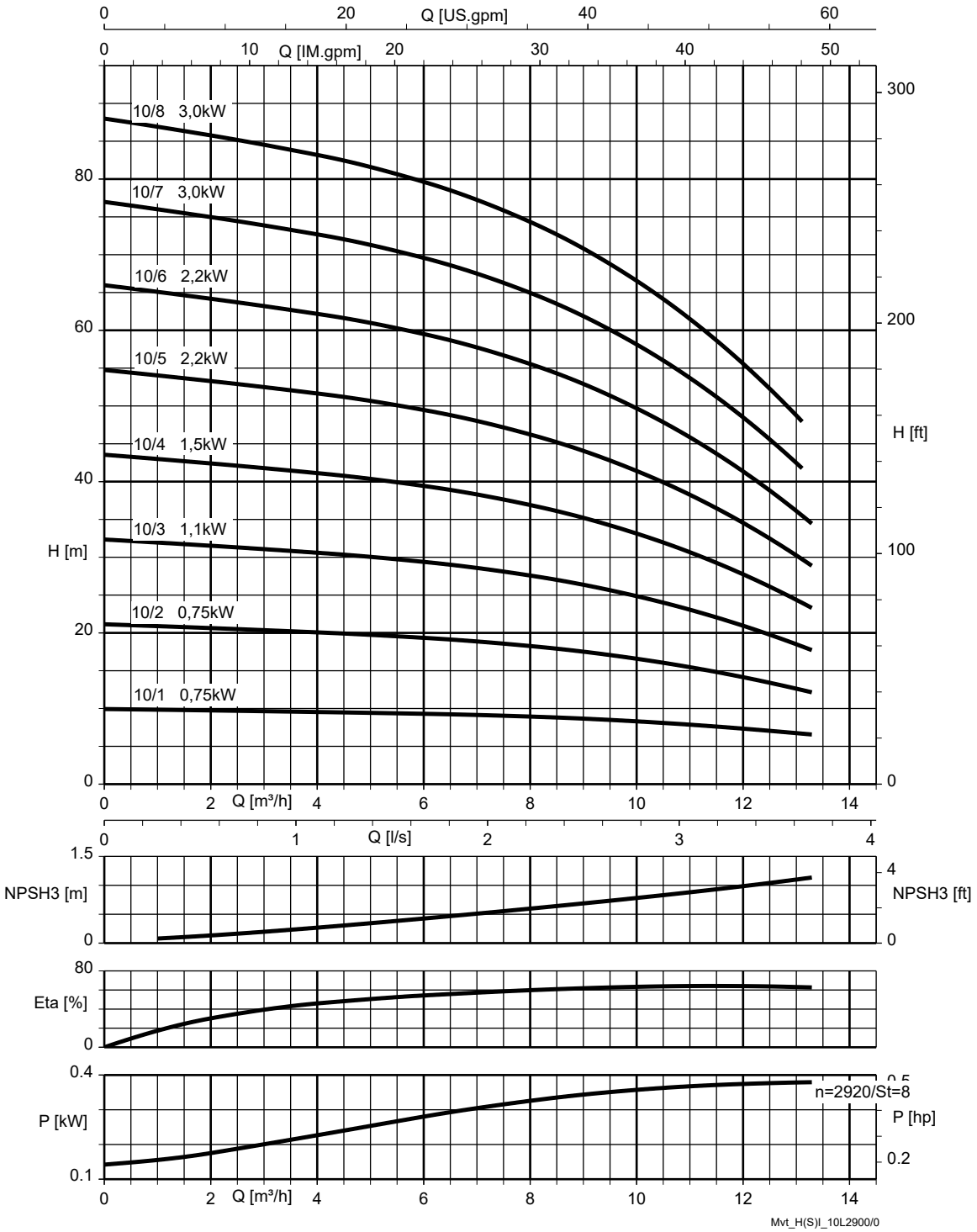

St = 1	P per stage

1798.55/07-EN

Movitec H(S)I, 15C, n = 2900 rpm

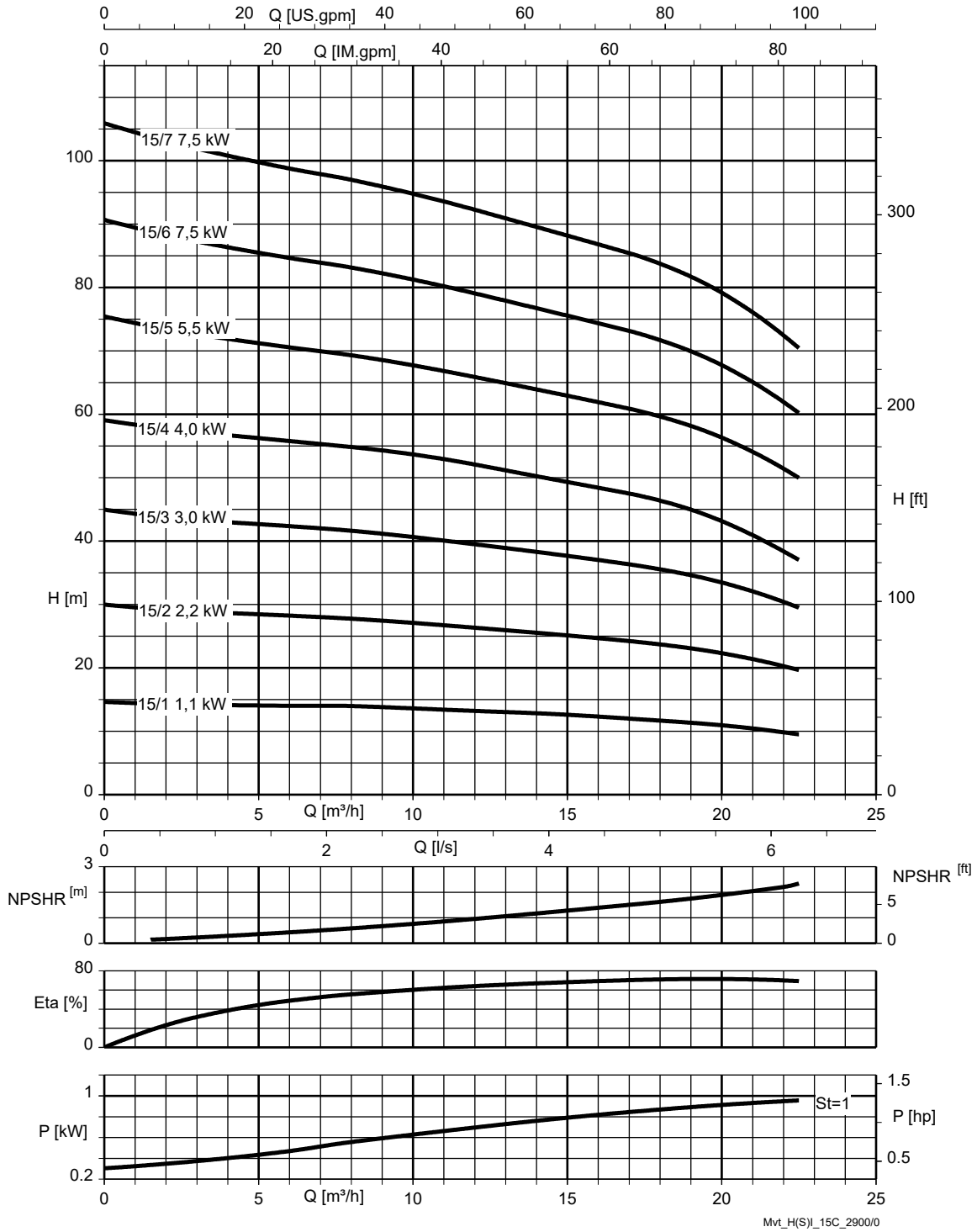

St = 1	P per stage

1798.55/07-EN

Movitec H(S)I, 15-LC, n = 2900 rpm

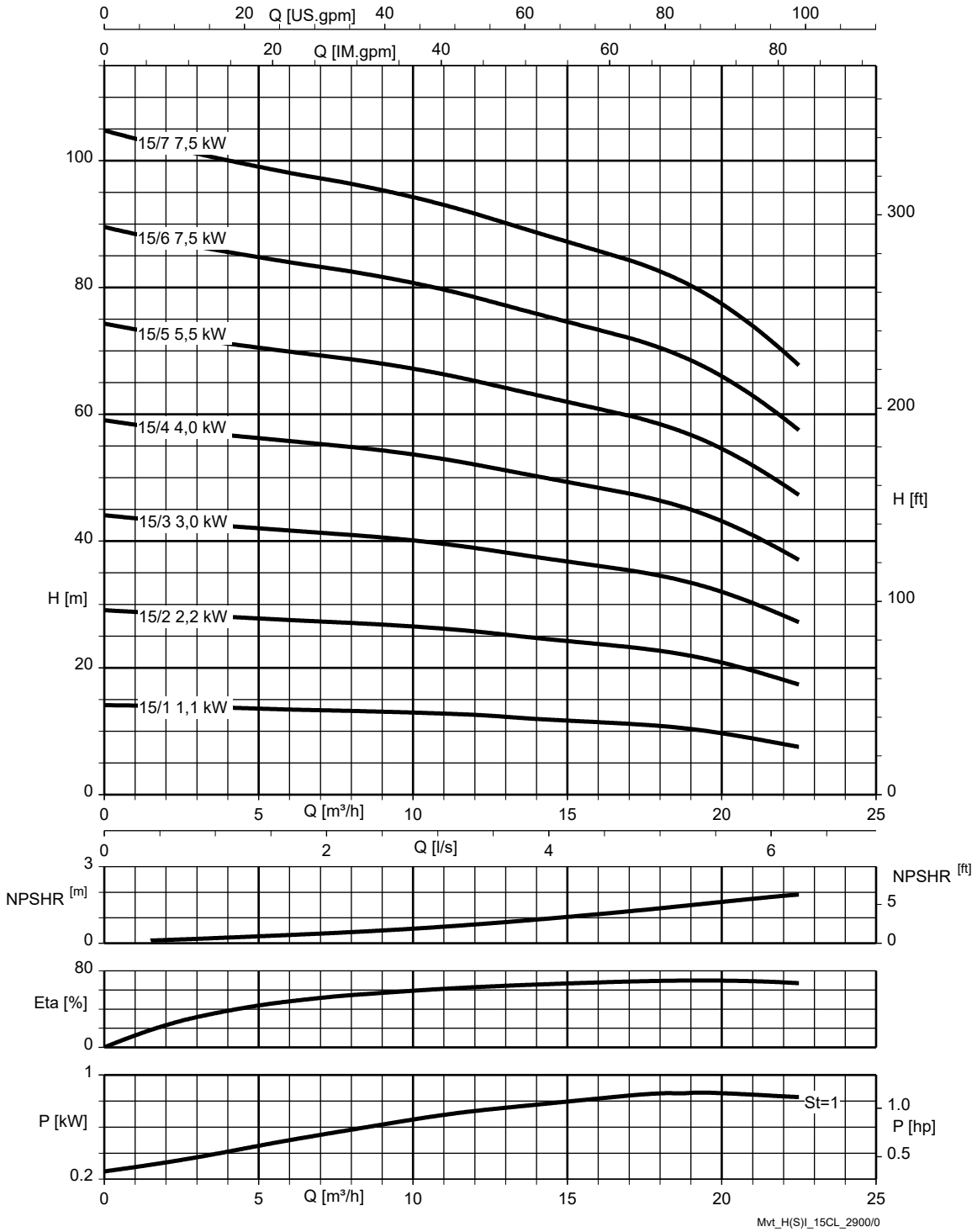

St = 1	P per stage

1798.55/07-EN

n = 1450 rpm

Movitec H(S)I, 10B, n = 1450 rpm

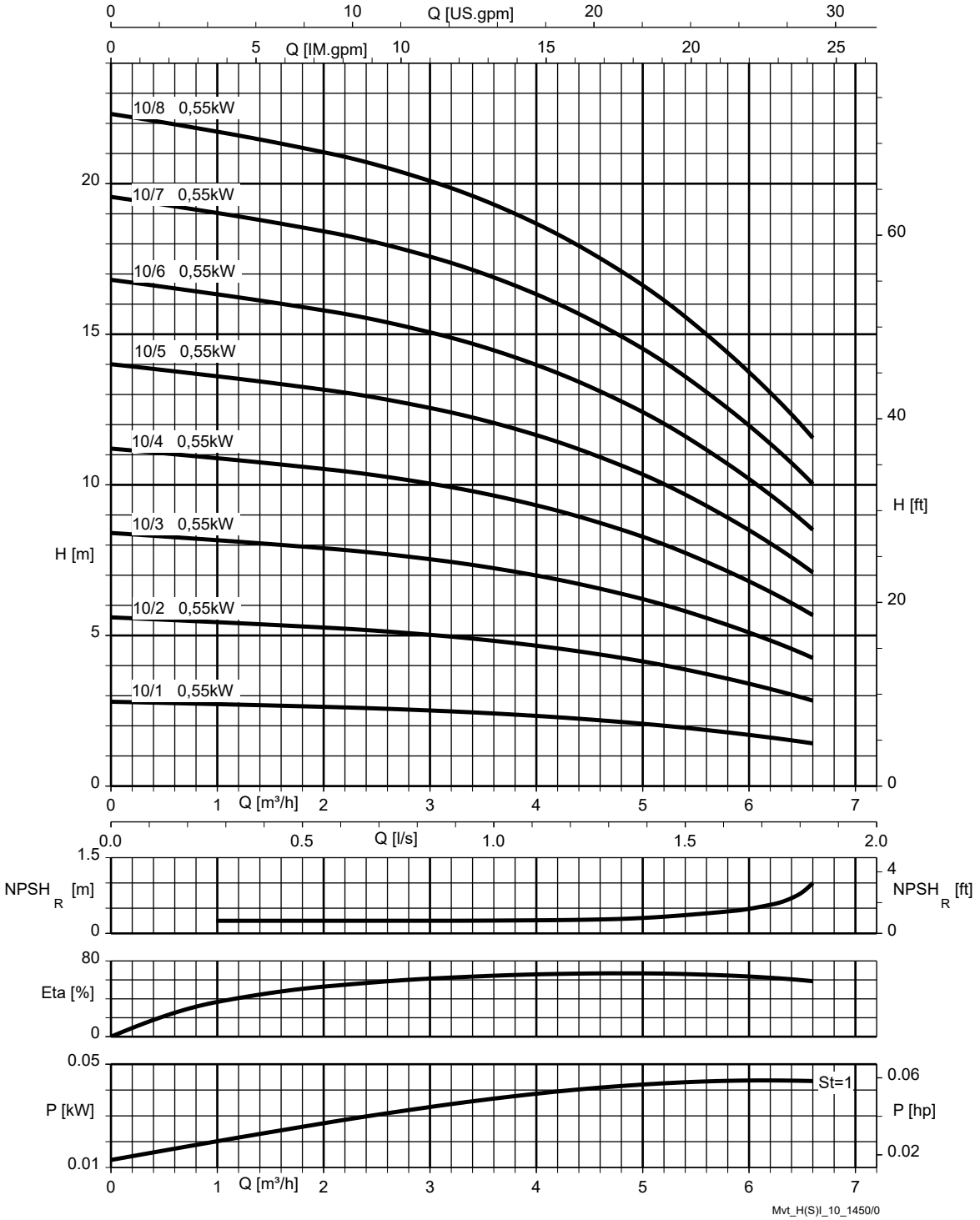

St = 1	P per stage

1798.55/07-EN

Movitec H(S)I, 10-LB, n = 1450 rpm

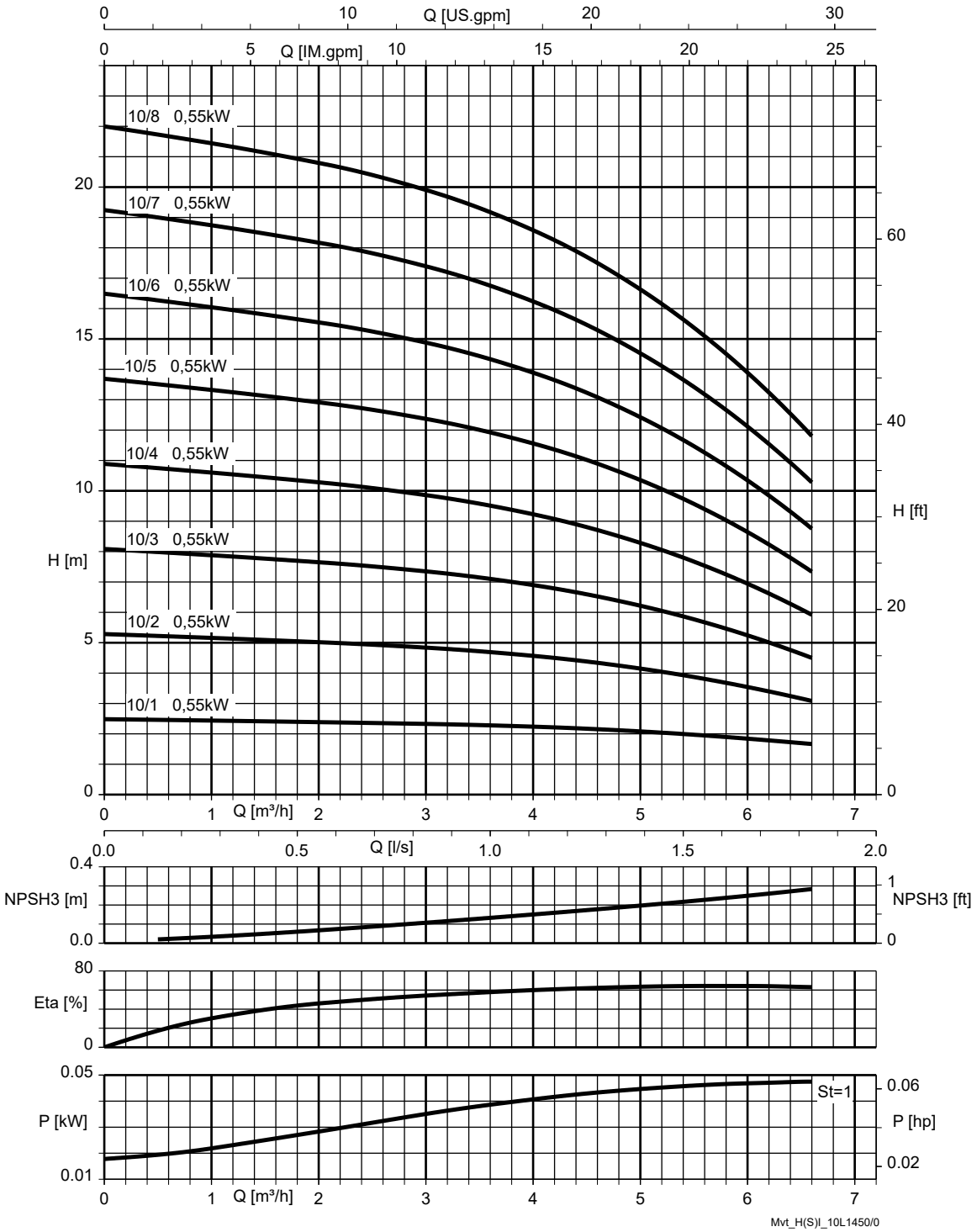

St = 1	P per stage

1798.55/07-EN

Movitec H(S)I, 15C, n = 1450 rpm

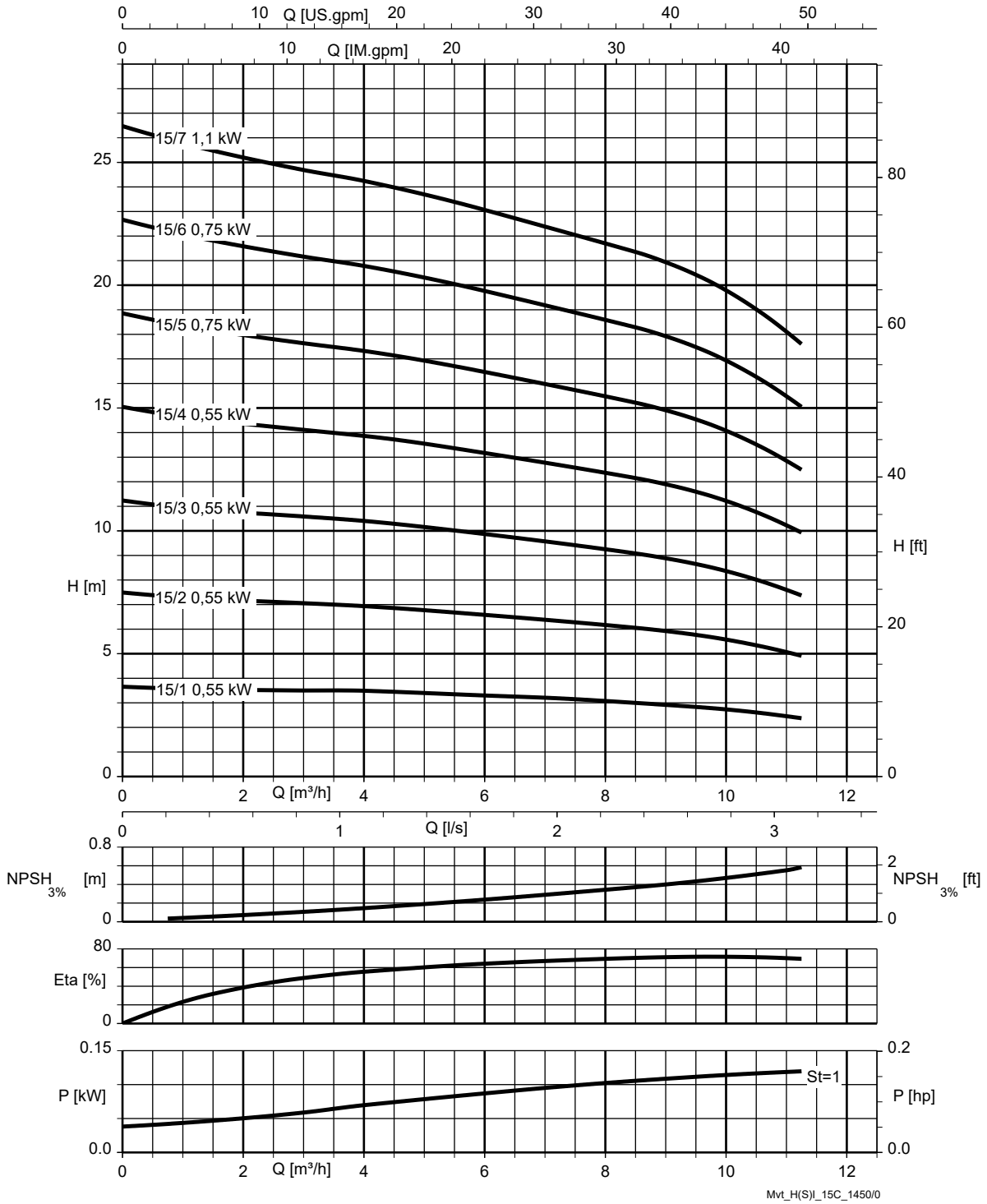

St = 1	P per stage

1798.55/07-EN

Movitec H(S)I, 15-LC, n = 1450 rpm

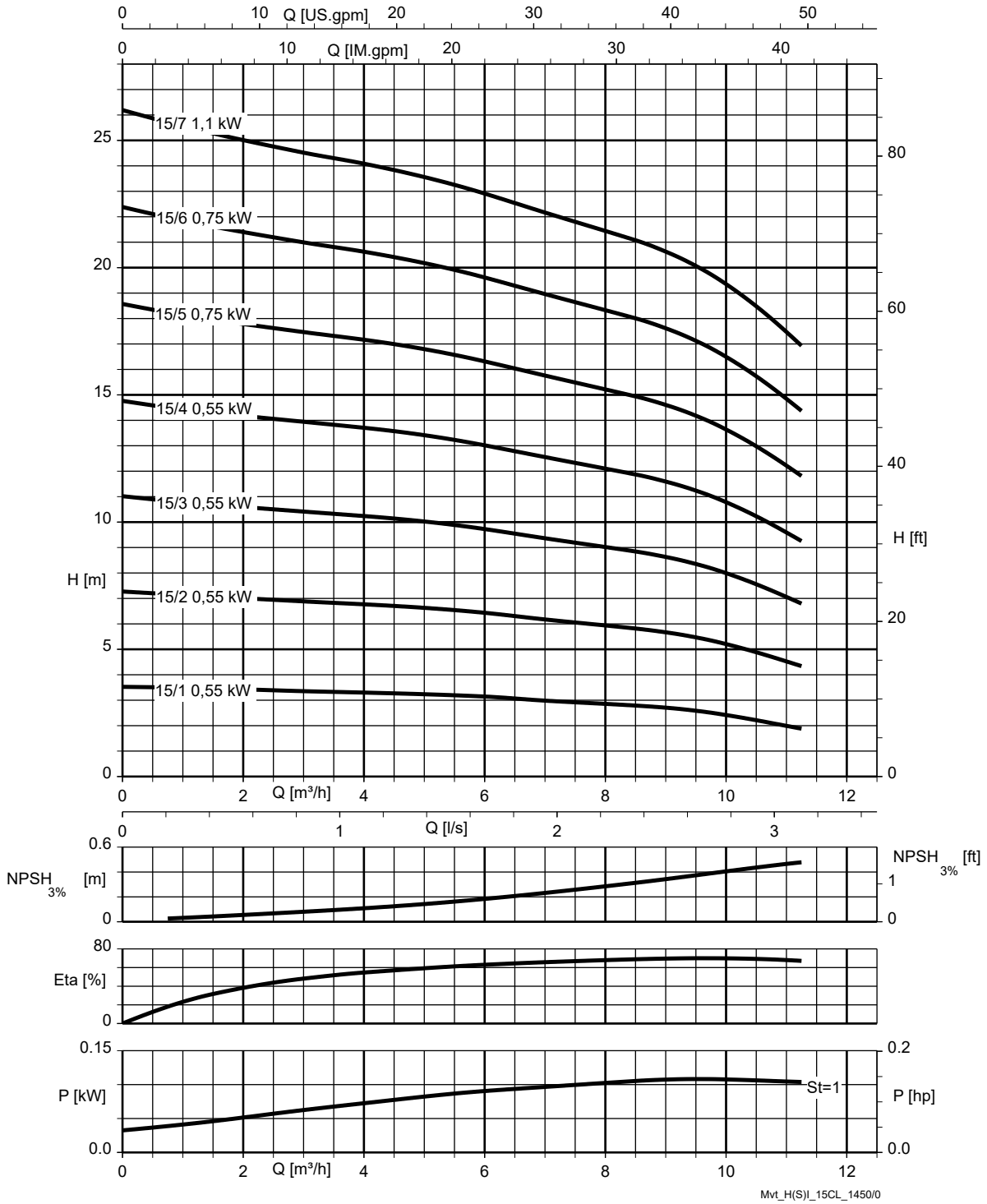

St = 1	P per stage

1798.55/07-EN

n = 3500 rpm

Movitec H(S)I, 2B, n = 3500 rpm

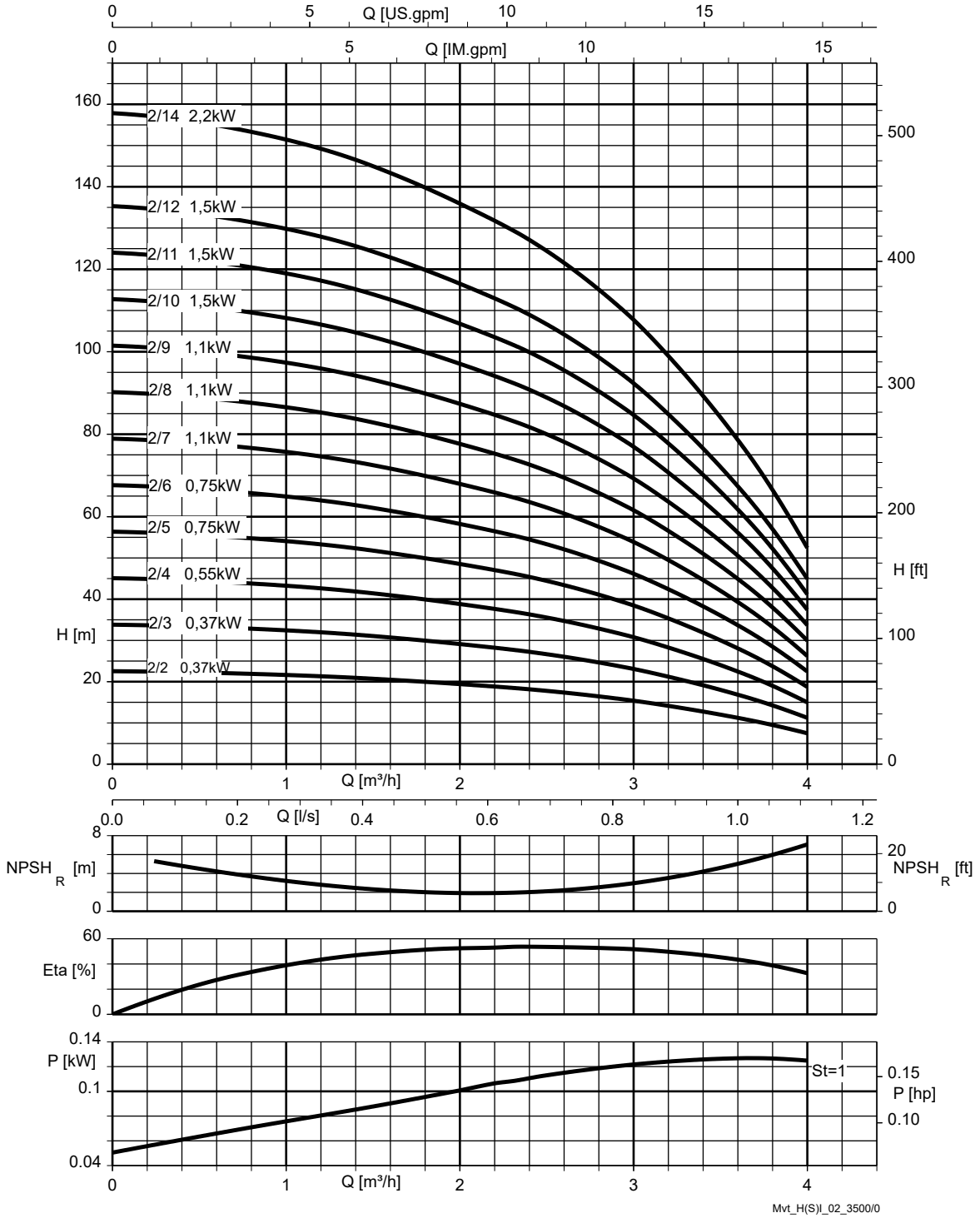

St = 1	P per stage

1798.55/07-EN

Movitec H(S)I, 2-LB, n = 3500 rpm

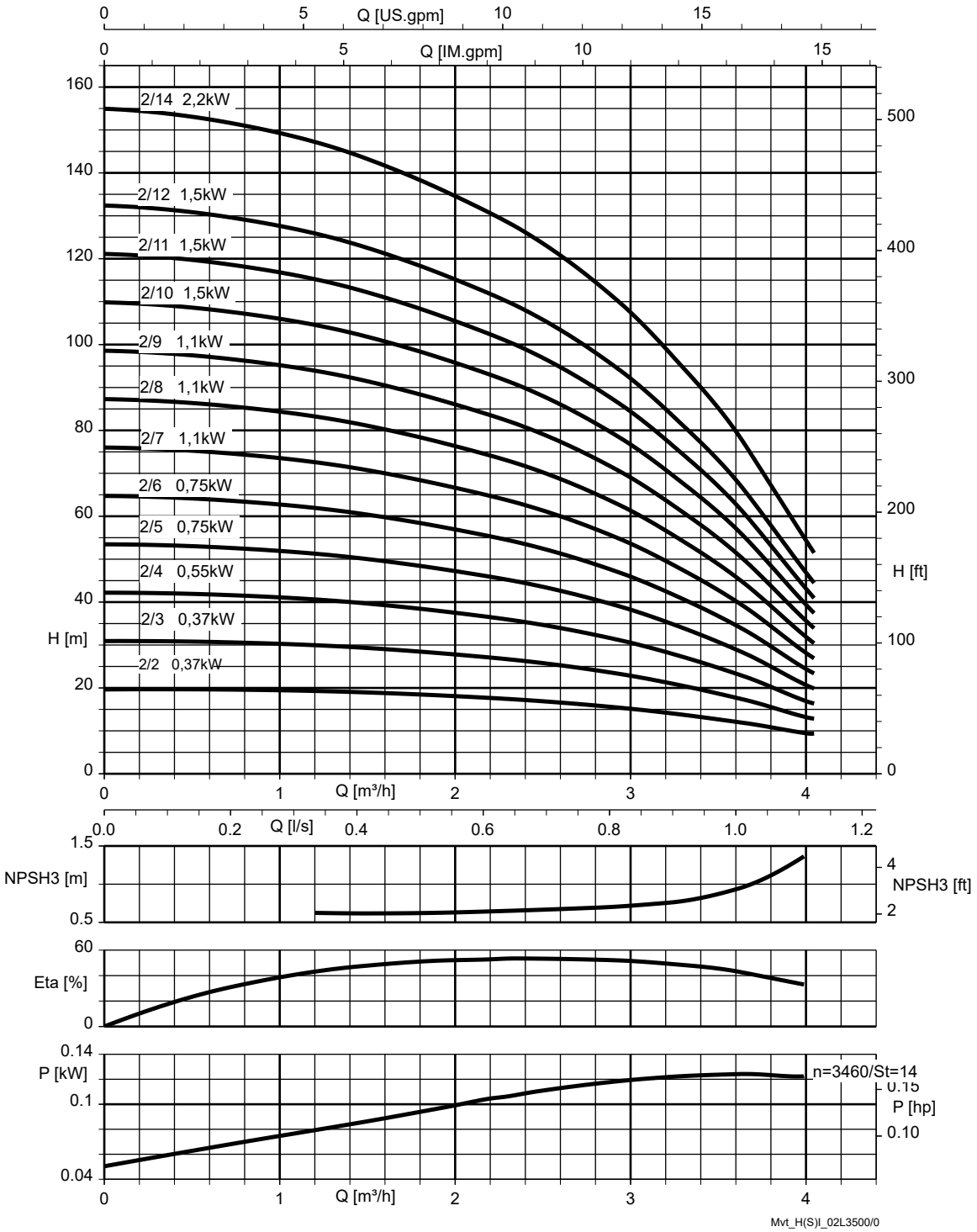

St = 1	P per stage

1798.55/07-EN

Movitec H(S)I, 4B, n = 3500 rpm

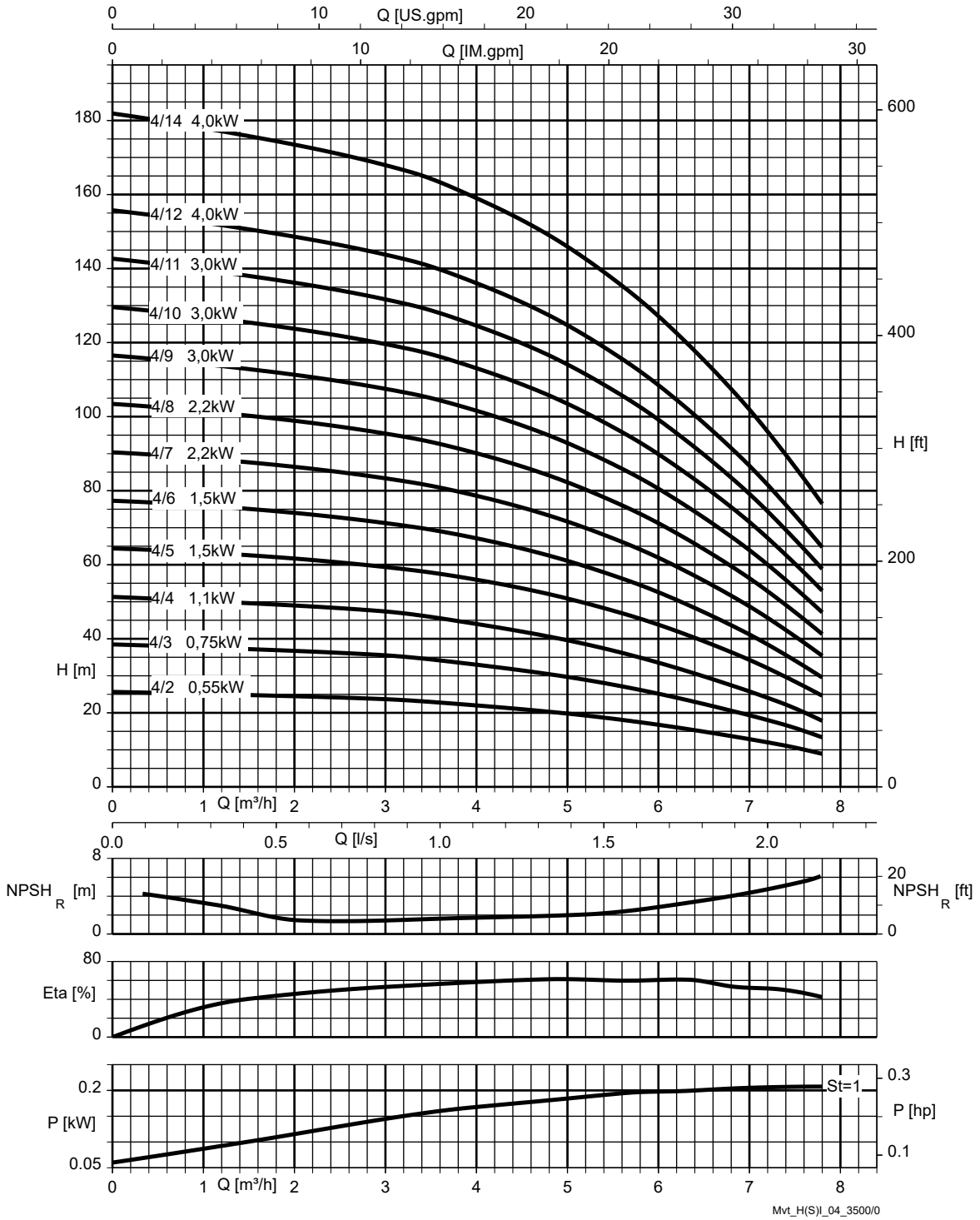

St = 1	P per stage

1798.55/07-EN

Movitec H(S)I, 4-LB, n = 3500 rpm

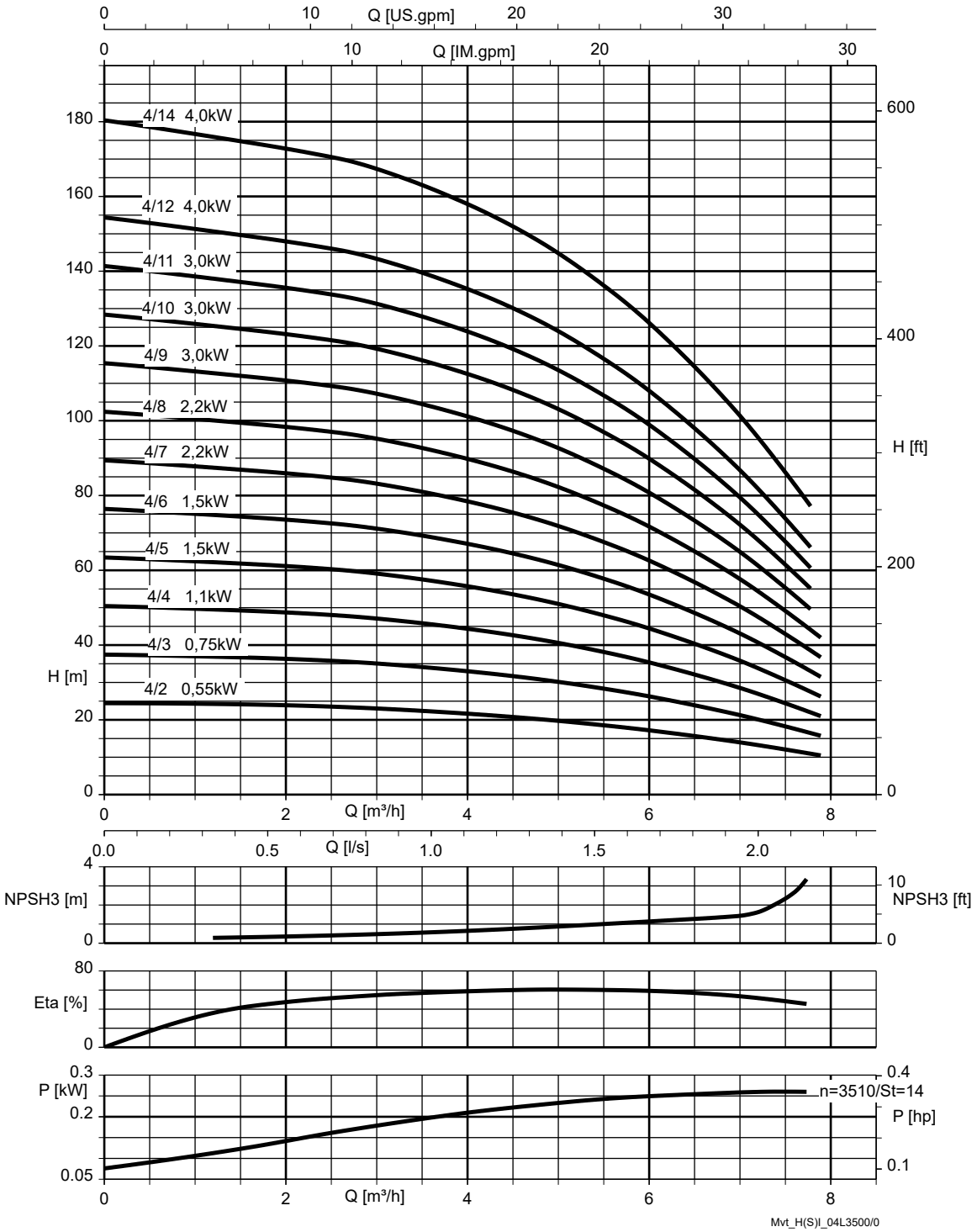

St = 1	P per stage

1798.55/07-EN

Movitec H(S)I, 6B, n = 3500 rpm

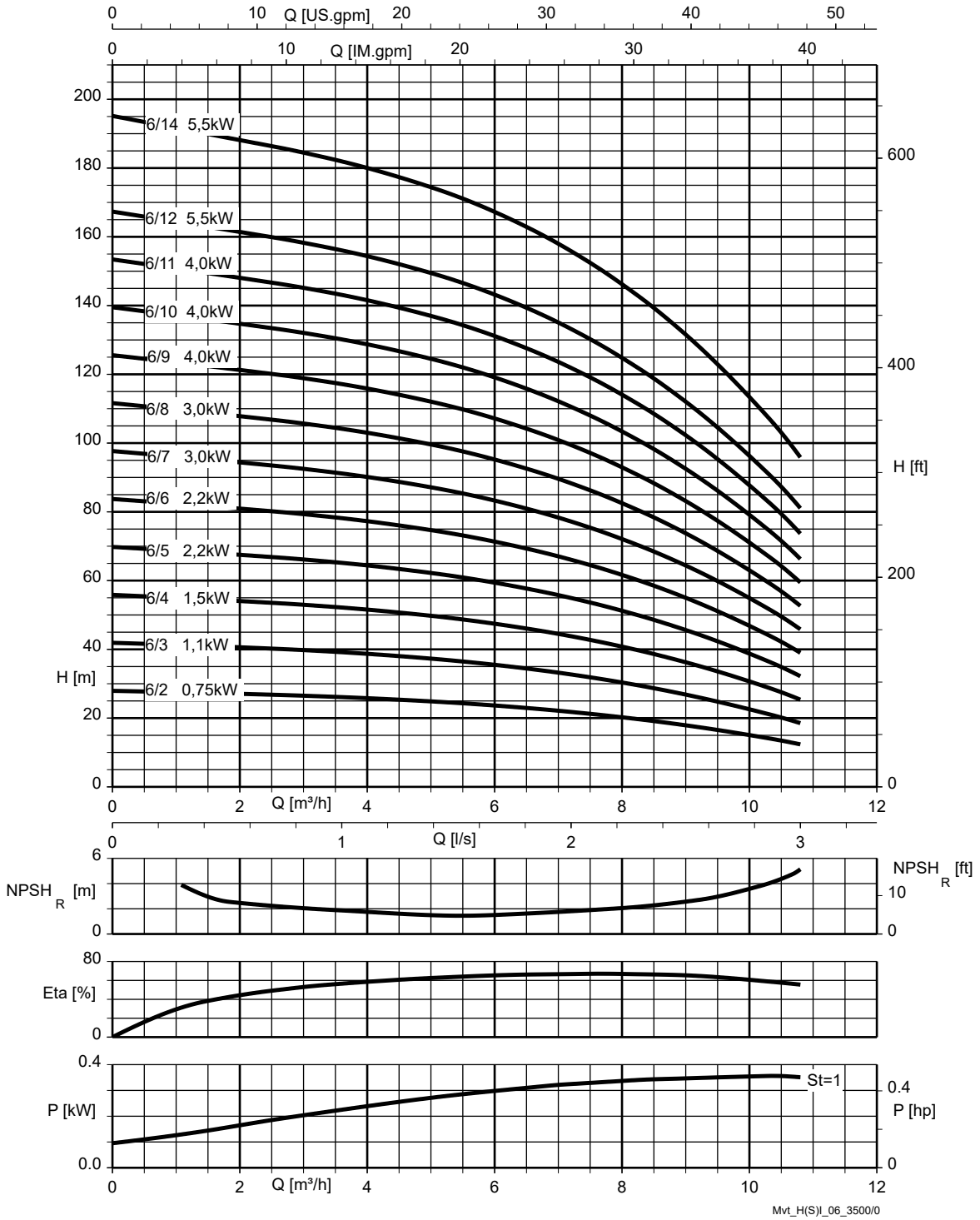

St = 1	P per stage

1798.55/07-EN

Movitec H(S)I, 6-LB, n = 3500 rpm

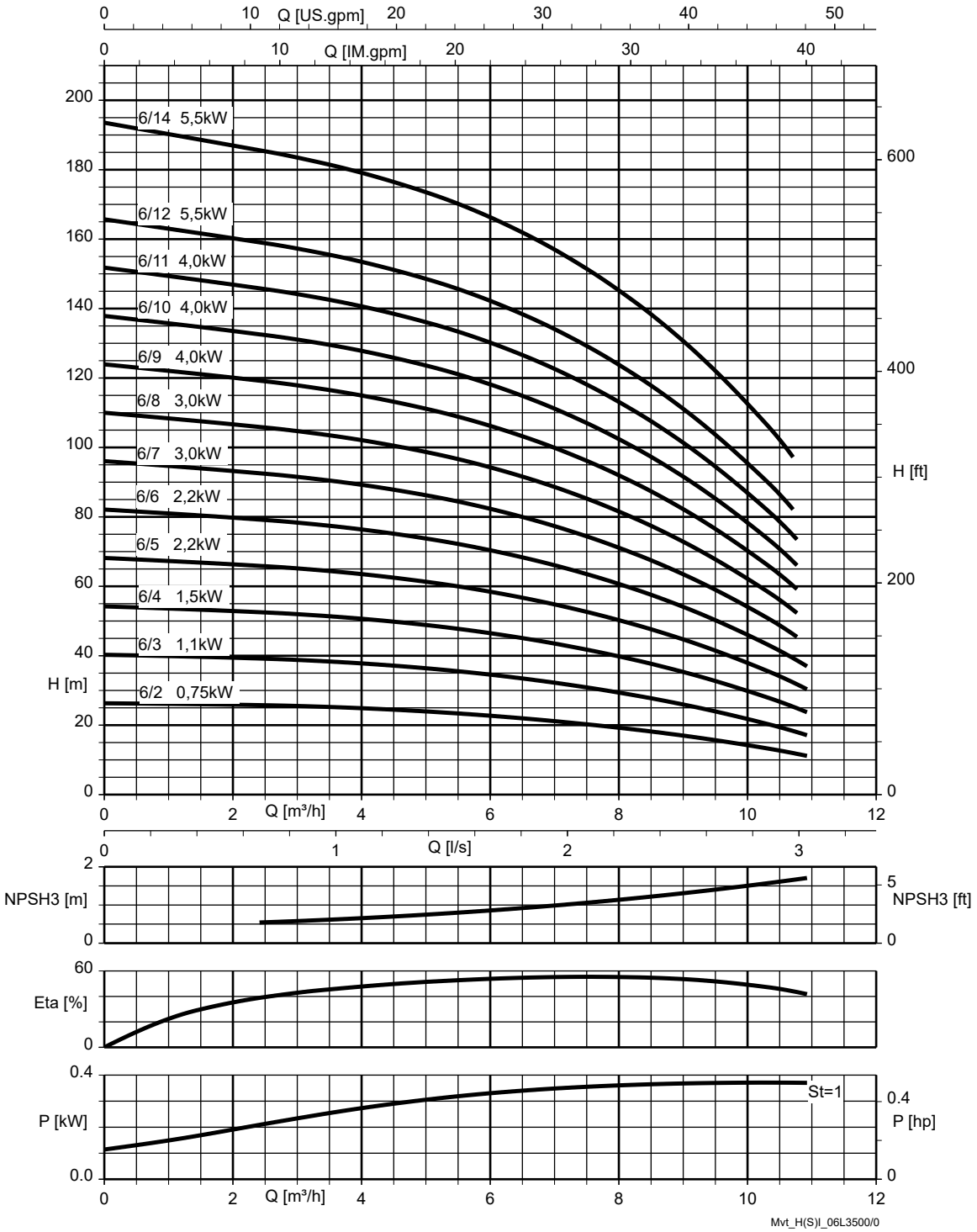

St = 1	P per stage

1798.55/07-EN

Movitec H(S)I, 10B, n = 3500 rpm

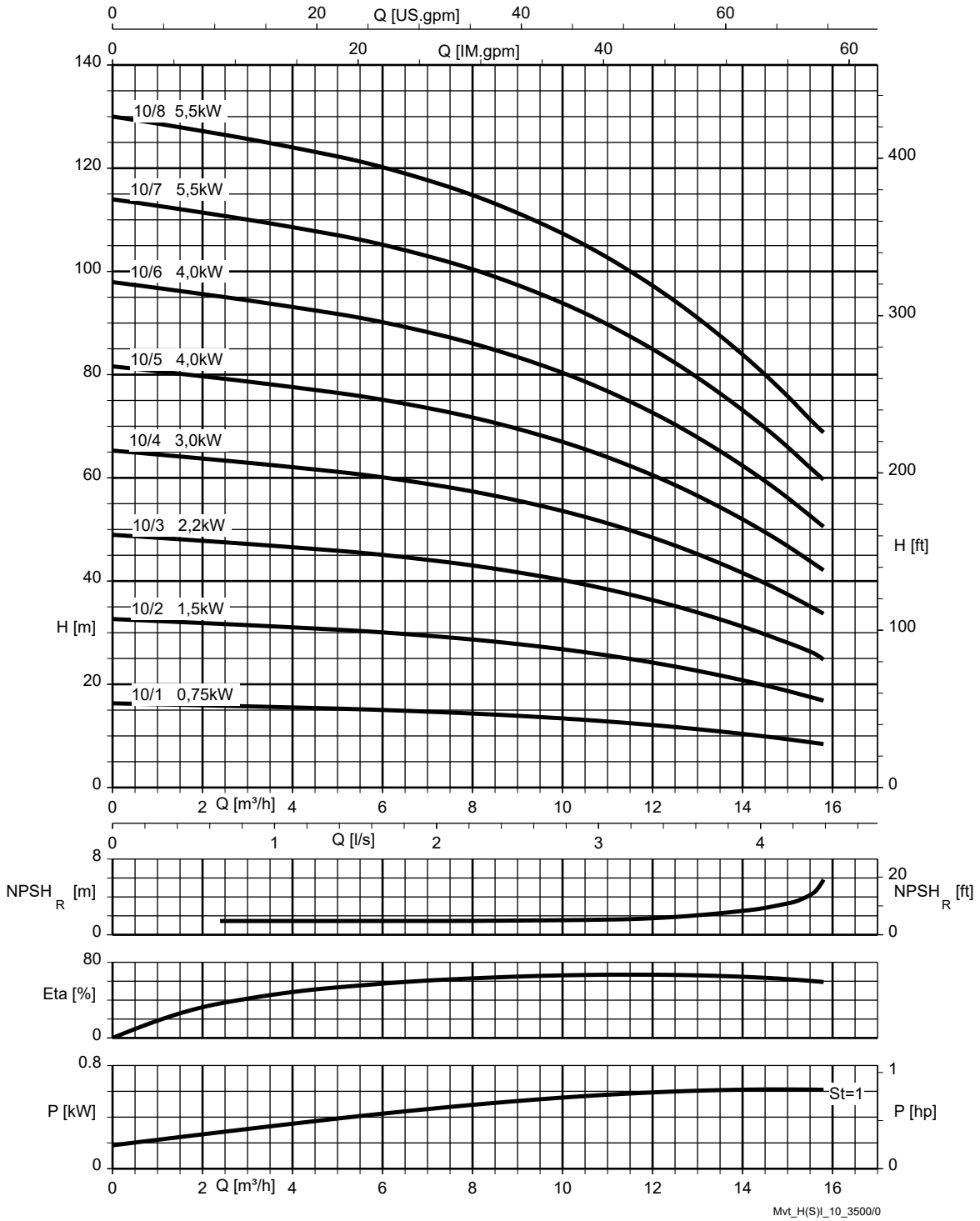

St = 1	P per stage

1798.55/07-EN

Movitec H(S)I, 10-LB, n = 3500 rpm

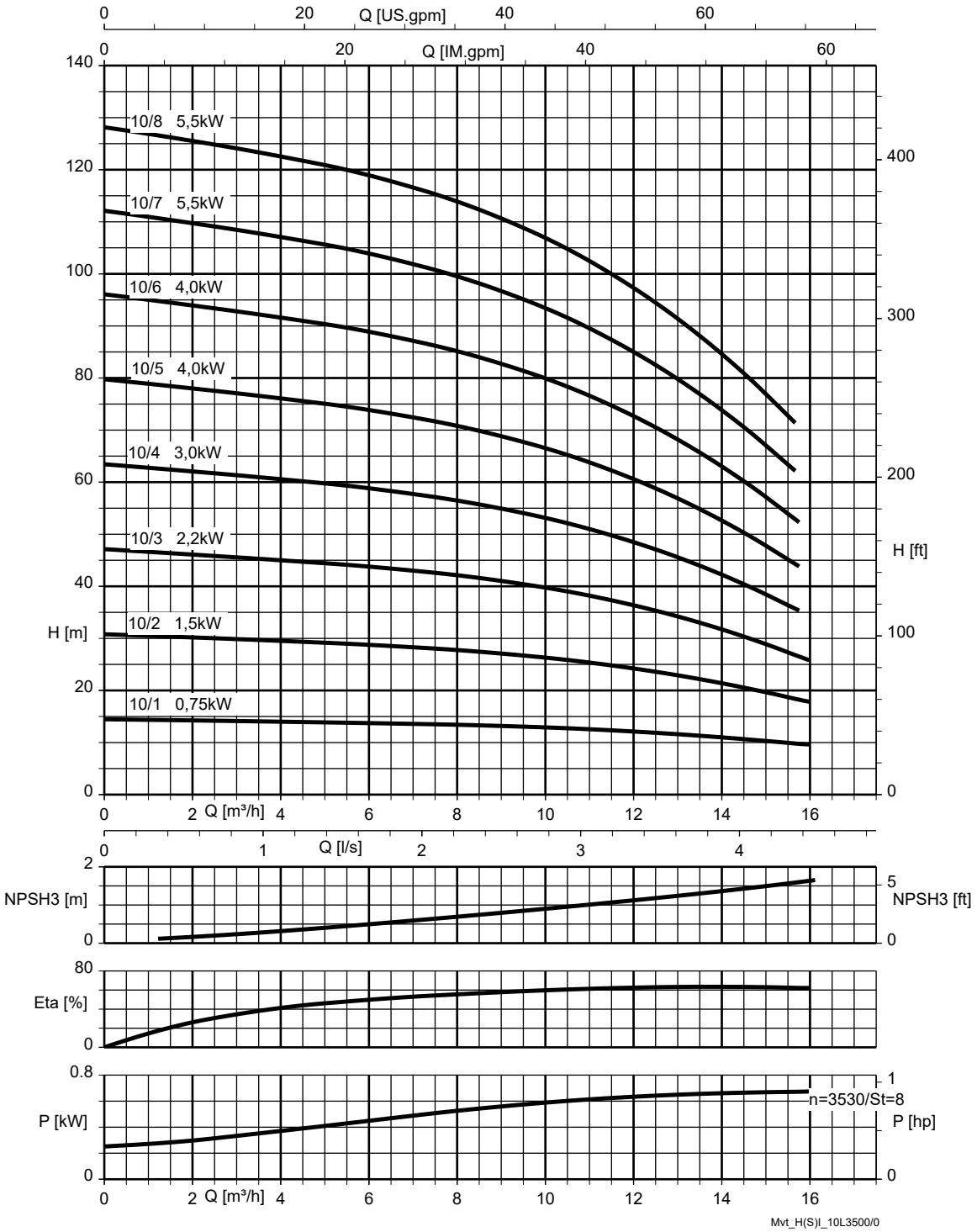

St = 1	P per stage

1798.55/07-EN

Movitec H(S)I, 15C, n = 3500 rpm

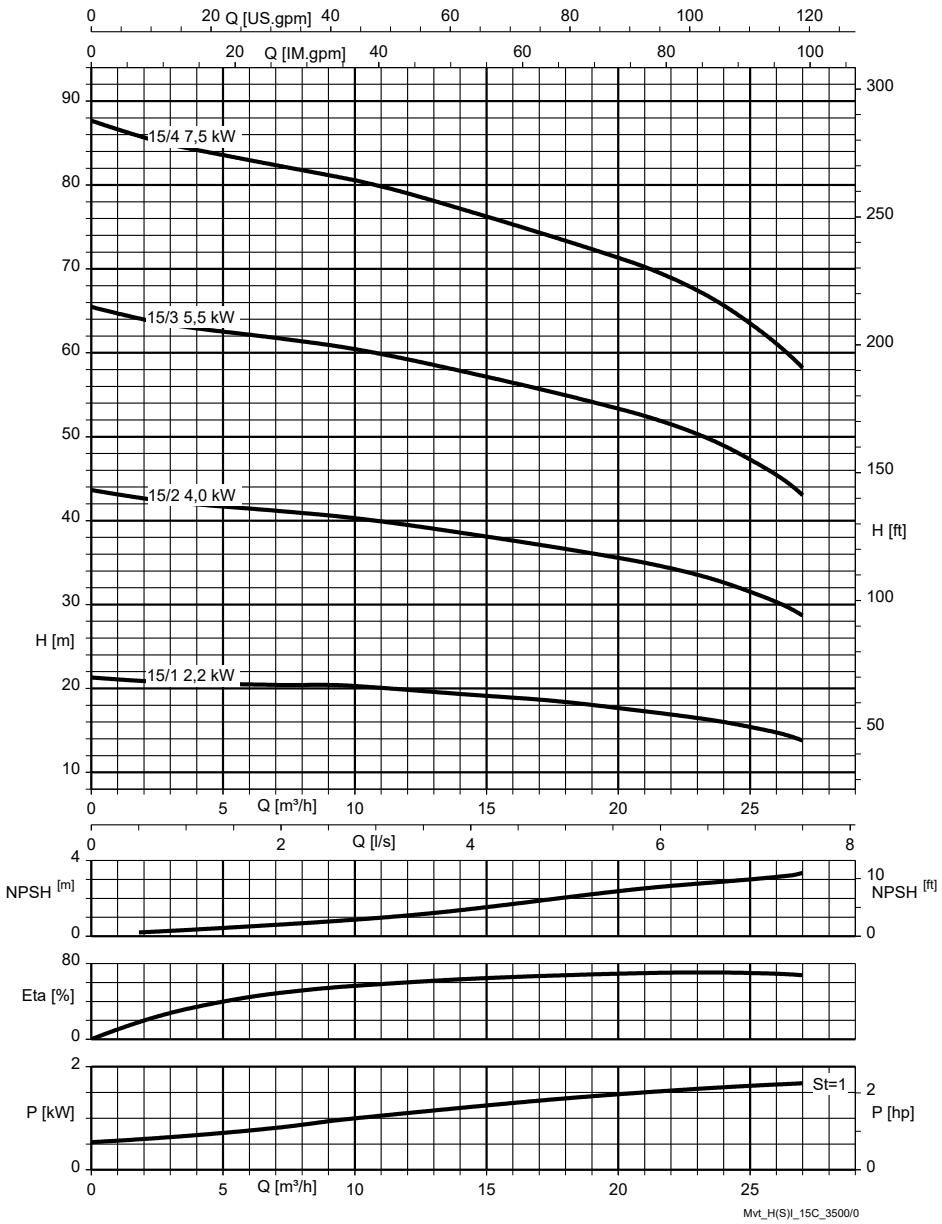

St = 1	P per stage

1798.55/07-EN

Movitec H(S)I, 15-LC, n = 3500 rpm

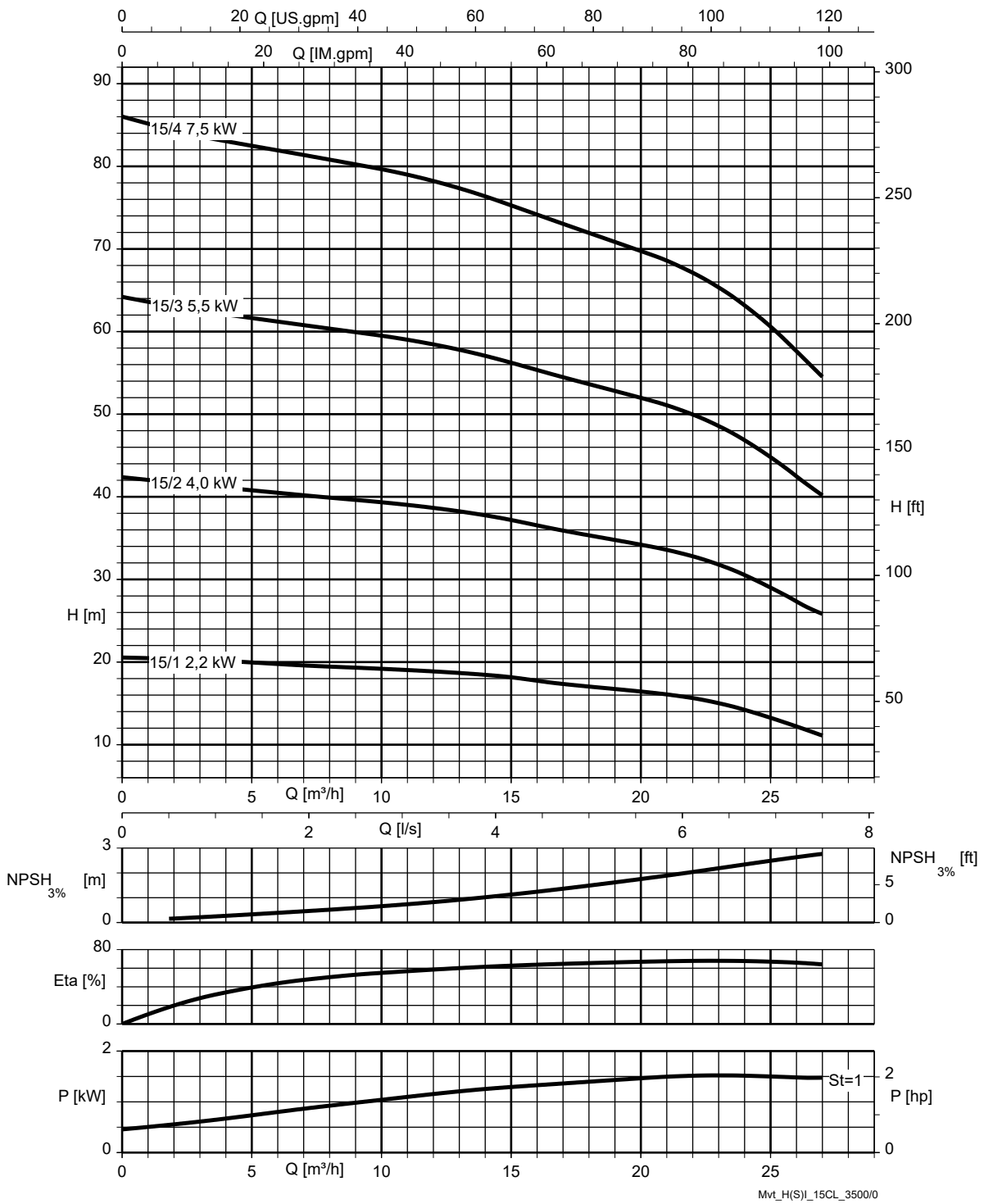

St = 1	P per stage

1798.55/07-EN

n = 1750 rpm

Movitec H(S)I, 10B, n = 1750 rpm

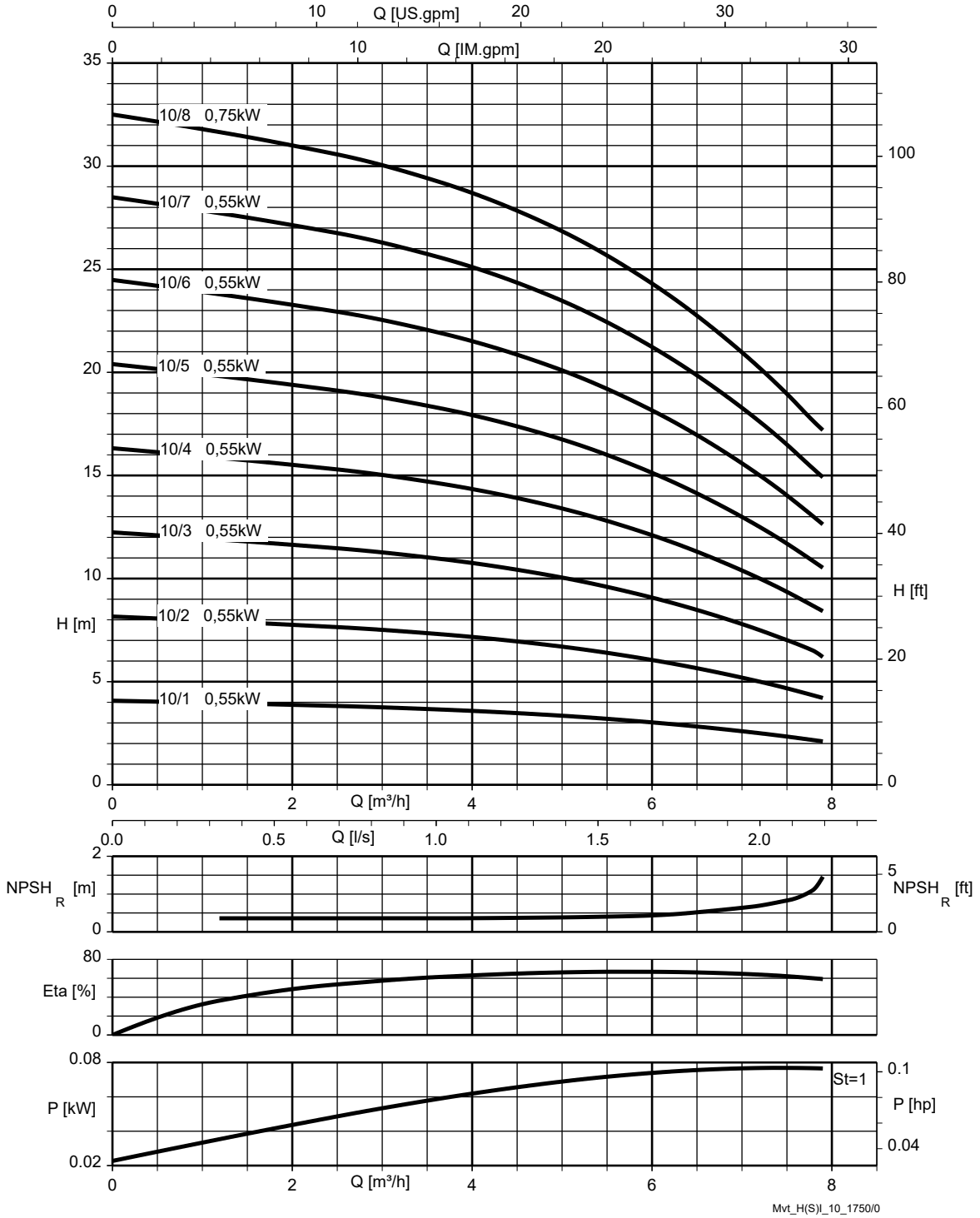

St = 1	P per stage

1798.55/07-EN

Movitec H(S)I, 10-LB, n = 1750 rpm

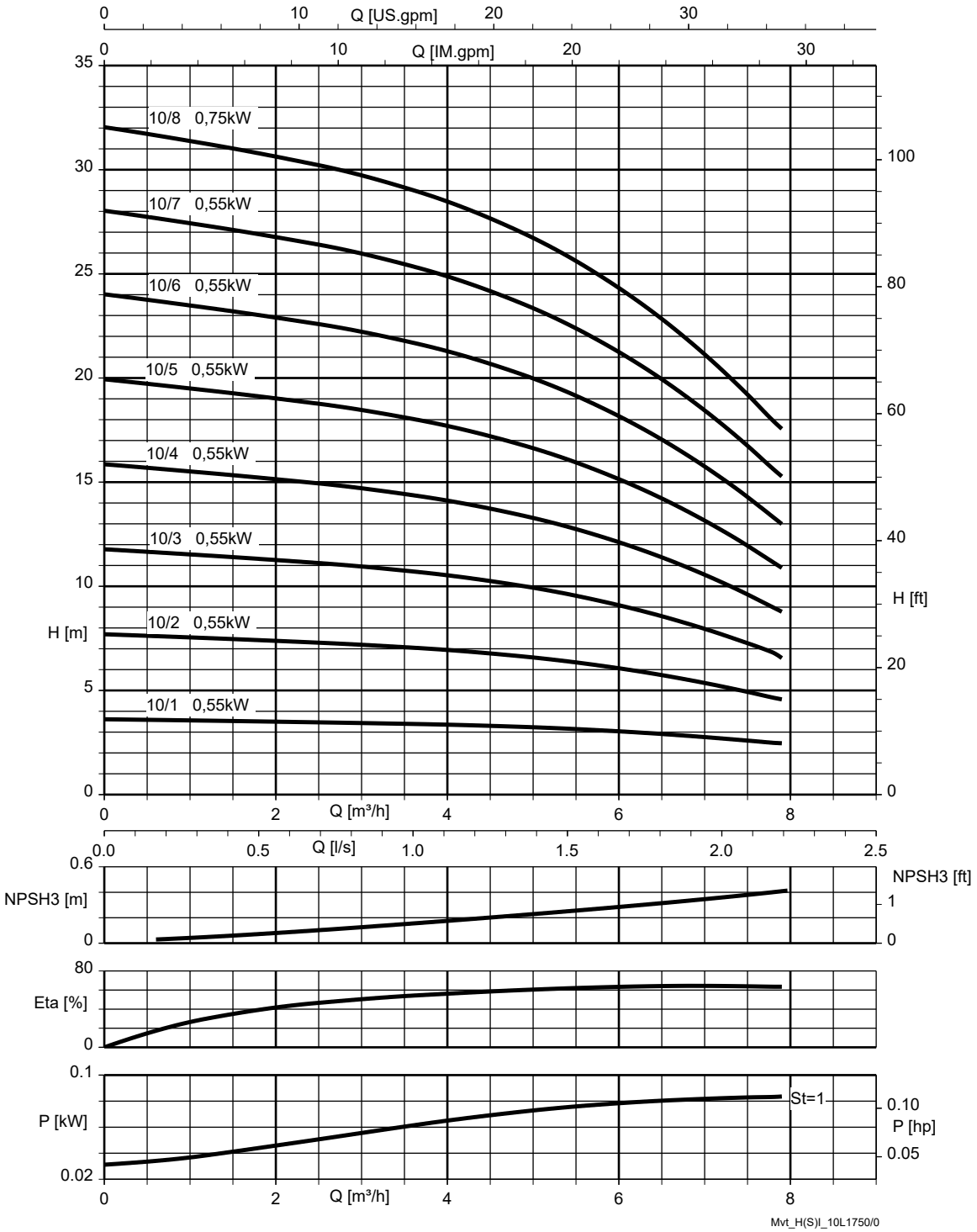

St = 1	P per stage

1798.55/07-EN

Movitec H(S)I, 15C, n = 1750 rpm

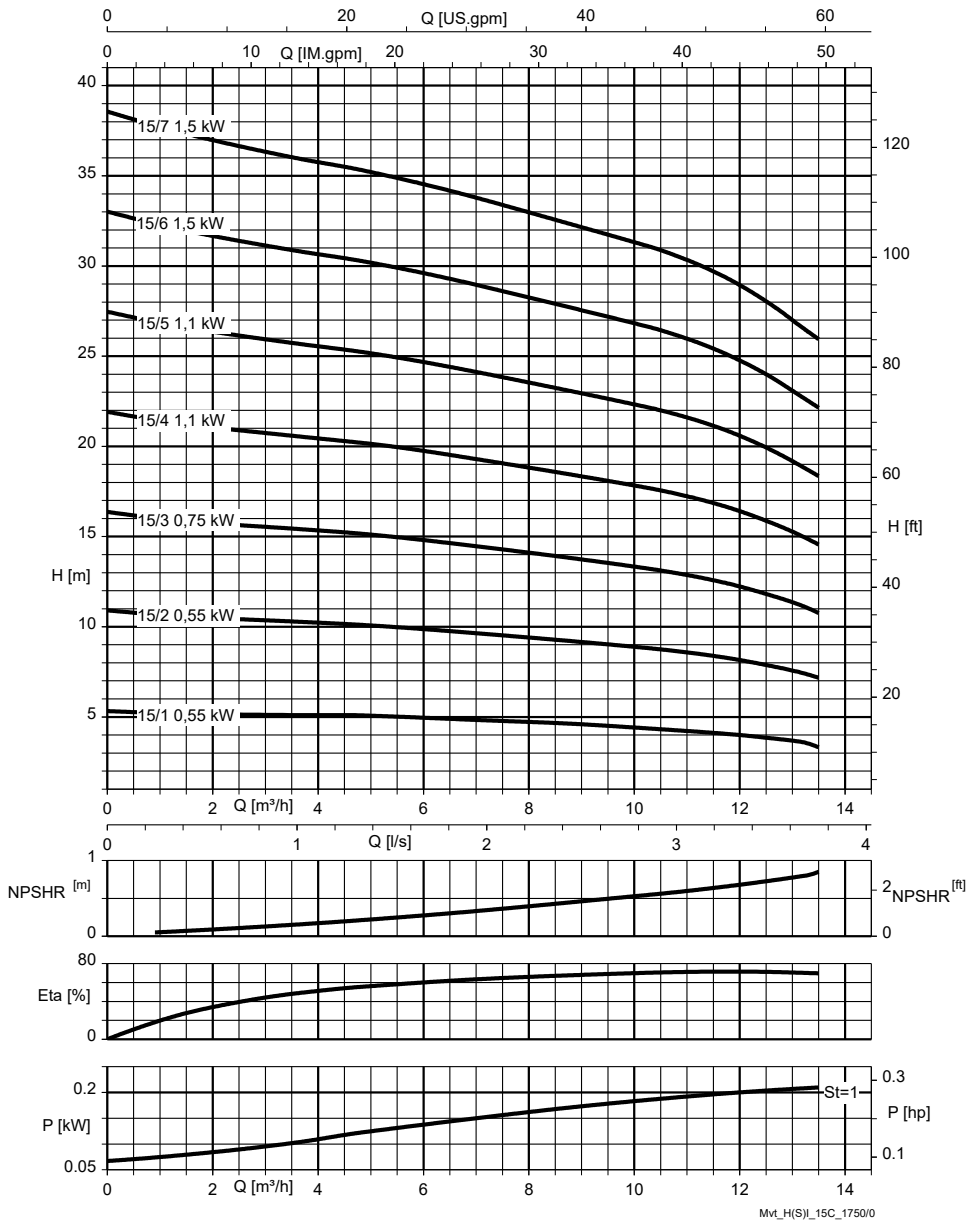

St = 1	P per stage

1798.55/07-EN

Movitec H(S)I, 15-LC, n = 1750 rpm

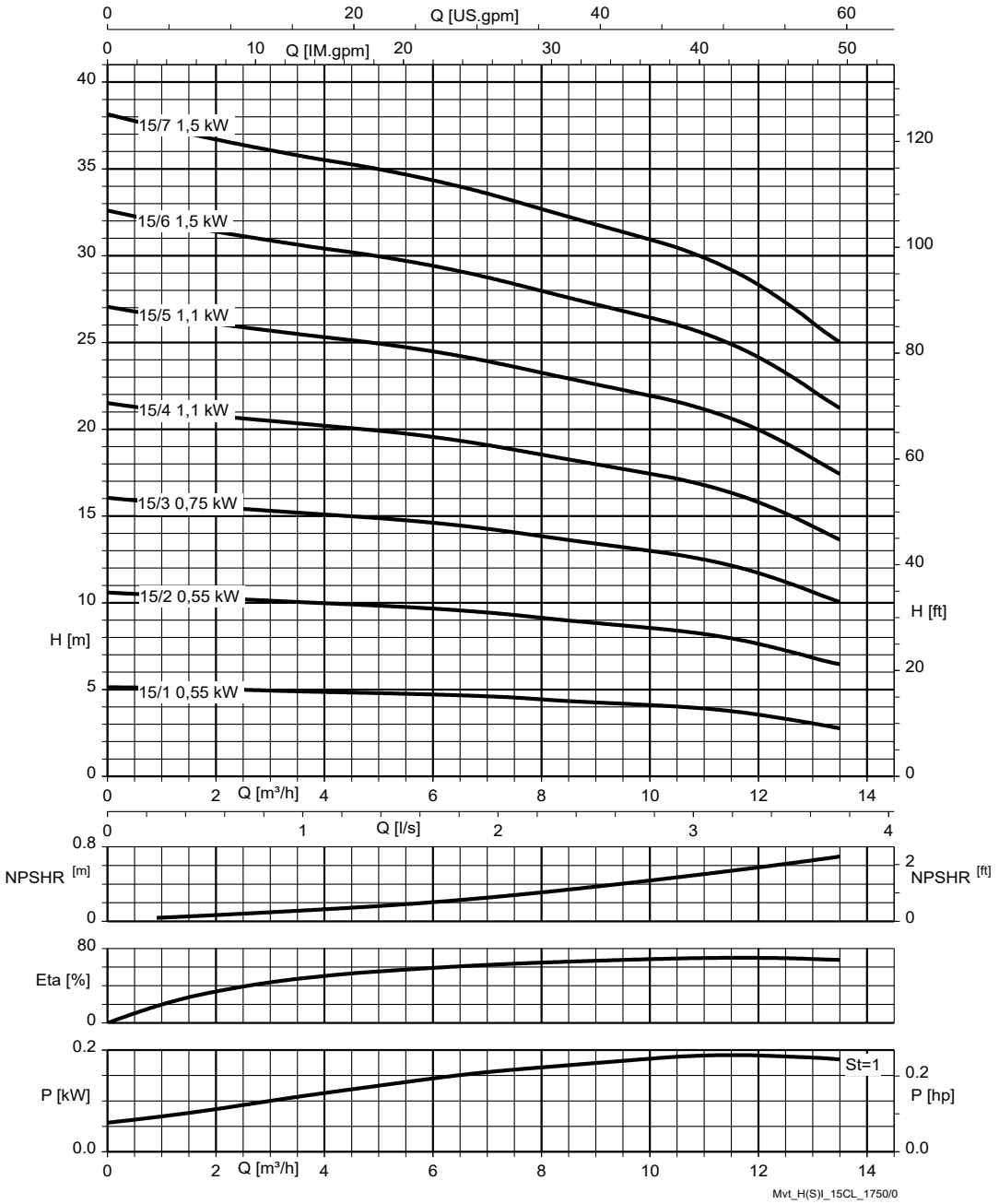

St = 1	P per stage

1798.55/07-EN

Installation types

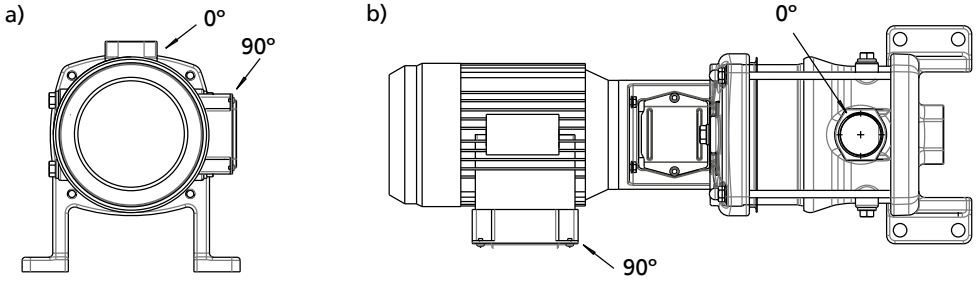

Fig. 4: Standard installation type a) Side view (seen from the motor) b) Top view

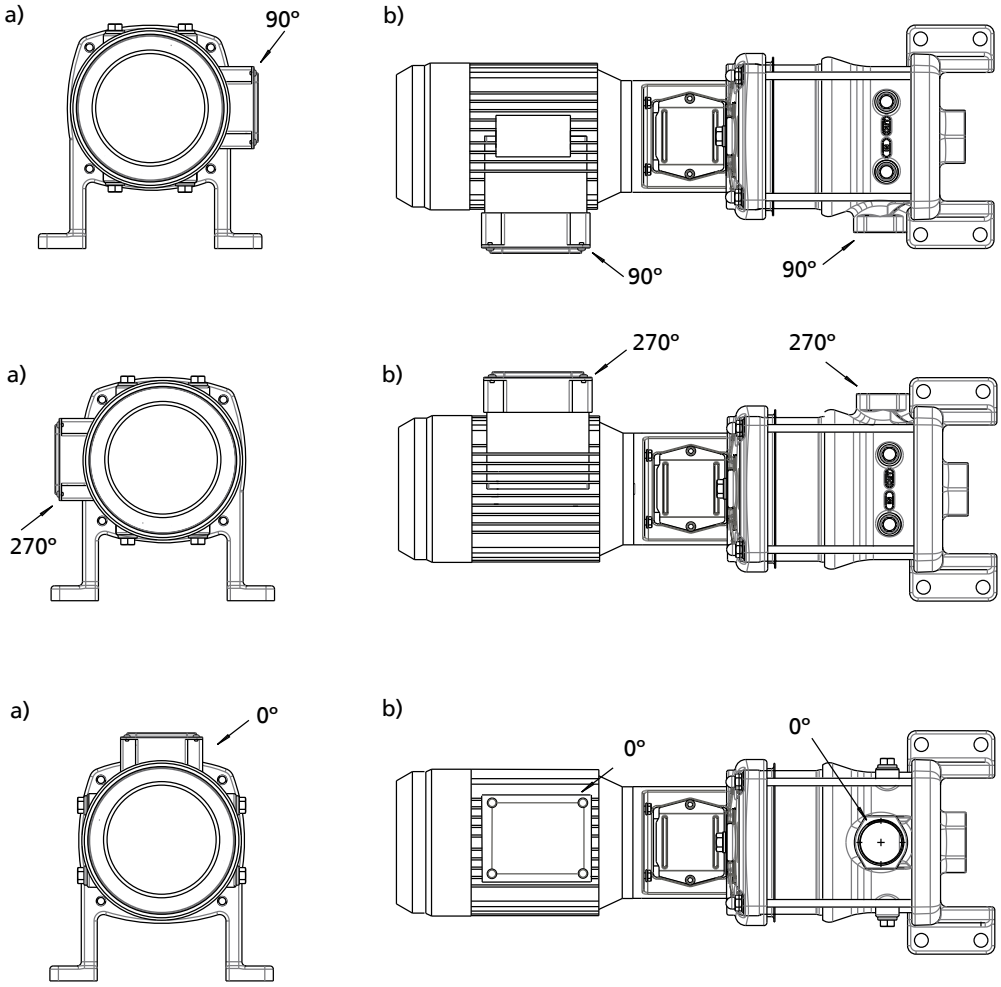

Fig. 5: Optional installation types for terminal box position = position discharge side connection a) Side view (seen from the motor) b) Top view

Dimensions and connections

Movitec H(S)I 2B, n = 2900 rpm

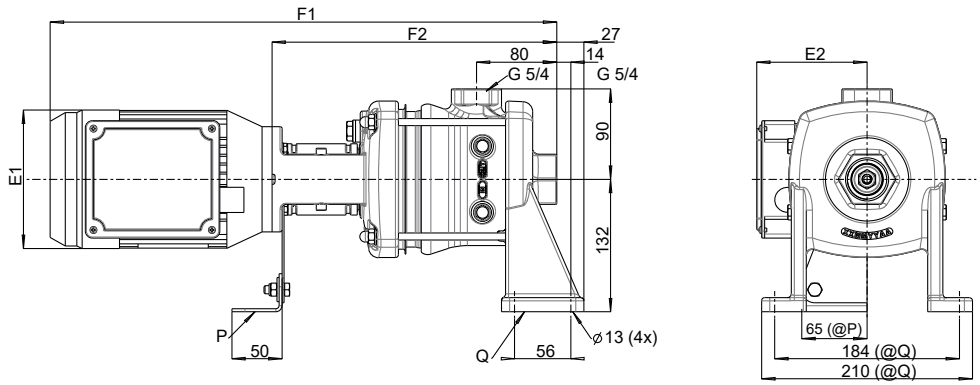

Fig. 6: Dimensions and connections of Movitec H(S)I 2 with V18 motor[4)]

Table 17: Dimensions

Number of stages	Motor	P_N	E1	E2	F1	F2
		[kW]	[mm]	[mm]	[mm]	[mm]
2	V18	0,37	138	109	502	289
3	V18	0,37	138	109	523	310
4	V18	0,37	138	109	545	332
5	V18	0,37	138	109	566	353
6	V18	0,55	138	109	588	375
7	V18	0,55	138	109	609	396
8	V18	0,55	138	109	631	418
9	V18	0,75	157	133	706	449
10	V18	0,75	157	133	728	471
11	V18	1,1	157	133	749	492
12	V18	1,1	157	133	771	514
14	V18	1,1	157	133	814	557

1798.55/07-EN

4 Optional: connection height 160 mm

Movitec H(S)I 2B, n = 3500 rpm

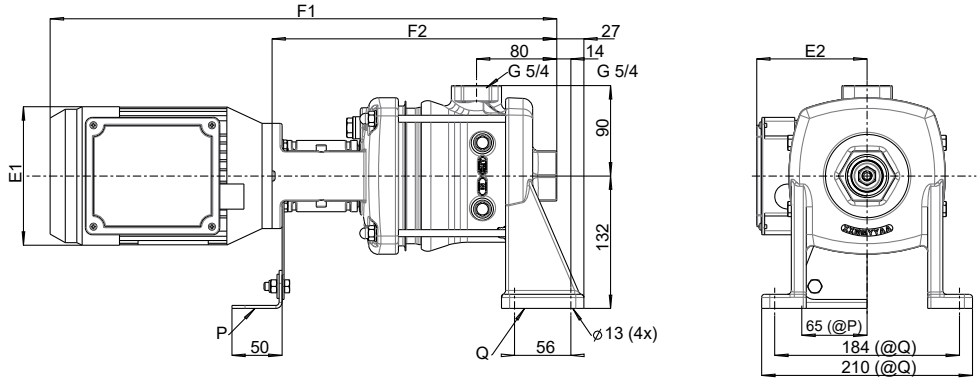

Fig. 7: Dimensions and connections of Movitec H(S)I 2 with V18 motor[5)]

Table 18: Dimensions

Number of stages	Motor	P_N	E1	E2	F1	F2
		[kW]	[mm]	[mm]	[mm]	[mm]
2	V18	0,37	138	109	502	289
3	V18	0,37	138	109	523	310
4	V18	0,55	138	109	545	332
5	V18	0,75	157	133	620	363
6	V18	0,75	157	133	642	385
7	V18	1,1	157	133	663	406
8	V18	1,1	157	133	685	428
9	V18	1,1	180	145	706	449
10	V18	1,5	180	145	734	481
11	V18	1,5	180	145	755	502
12	V18	1,5	180	145	504	524
14	V18	2,2	180	145	849	567

5 Optional: connection height 160 mm

Movitec H(S)I 4B, n = 2900 rpm

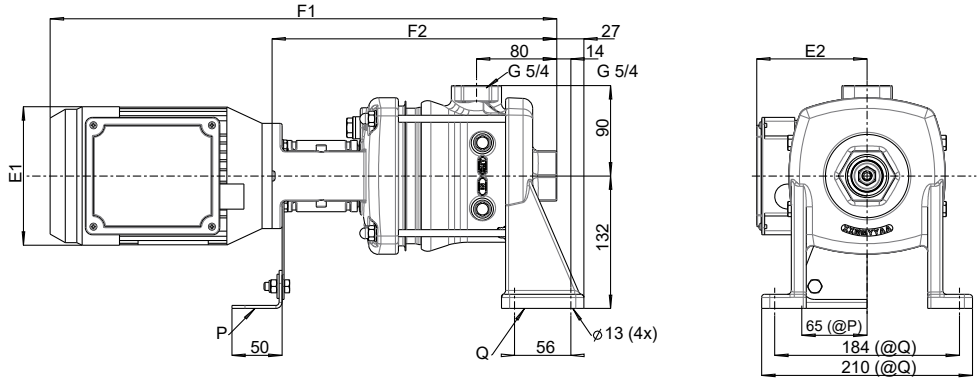

Fig. 8: Dimensions and connections of Movitec H(S)I 4 with V18 motor[6)]

Table 19: Dimensions

Number of stages	Motor	P_N	E1	E2	F1	F2
		[kW]	[mm]	[mm]	[mm]	[mm]
2	V18	0,37	138	109	502	289
3	V18	0,55	138	109	523	310
4	V18	0,55	138	109	545	332
5	V18	0,75	157	133	620	363
6	V18	1,1	157	133	642	385
7	V18	1,1	157	133	663	406
8	V18	1,5	180	145	691	438
9	V18	1,5	180	145	712	459
10	V18	1,5	180	145	734	481
11	V18	2,2	180	145	784	502
12	V18	2,2	180	145	806	524
14	V18	2,2	180	145	849	567

1798.55/07-EN

6 Optional: connection height 160 mm

Movitec H(S)I 4B, n = 3500 rpm

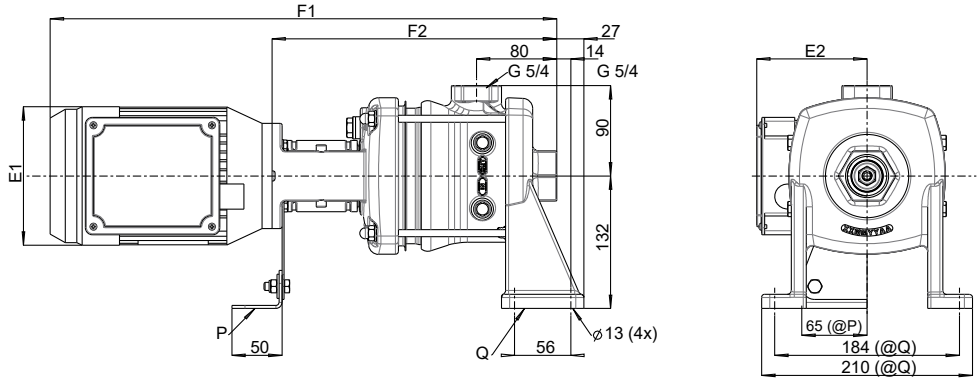

Fig. 9: Dimensions and connections of Movitec H(S)I 4 with V18 motor[7)]

Table 20: Dimensions

Number of stages	Motor	P_N	E1	E2	F1	F2
		[kW]	[mm]	[mm]	[mm]	[mm]
2	V18	0,55	138	109	502	289
3	V18	0,75	157	133	577	320
4	V18	1,1	157	133	599	342
5	V18	1,5	180	145	626	373
6	V18	1,5	180	145	648	395
7	V18	2,2	180	145	698	416
8	V18	2,2	180	145	720	438
9	V18	3,0	200	155	783	459
10	V18	3,0	200	155	805	491
11	V18	3,0	200	155	826	512
12	V18	4,0	223	166	848	534
14	V18	4,0	223	166	900	577

7 Optional: connection height 160 mm

Movitec H(S)I 6B, n = 2900 rpm

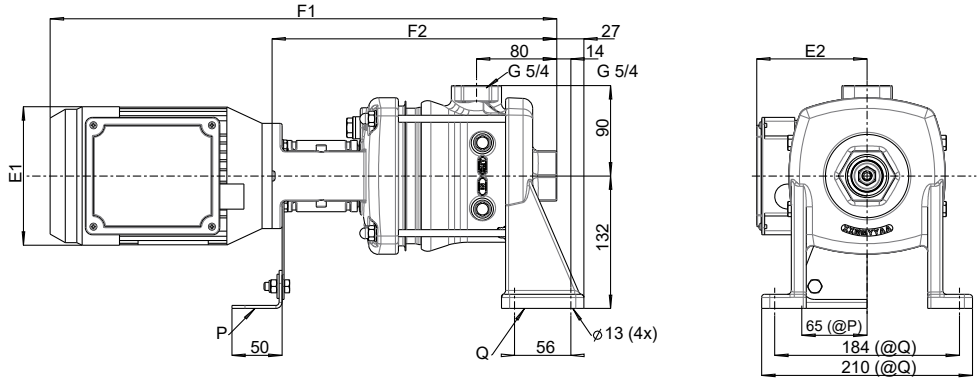

Fig. 10: Dimensions and connections of Movitec H(S)I 6 with V18 motor[8)]

Table 21: Dimensions

Number of stages	Motor	P_N	E1	E2	F1	F2
		[kW]	[mm]	[mm]	[mm]	[mm]
2	V18	0,37	138	109	509	296
3	V18	0,75	157	133	588	331
4	V18	1,1	157	133	613	356
5	V18	1,1	157	133	638	381
6	V18	1,5	180	145	669	416
7	V18	1,5	180	145	694	441
8	V18	2,2	180	145	748	466
9	V18	2,2	180	145	773	491
10	V18	2,2	180	145	798	516
11	V18	3,0	200	155	865	551
12	V18	3,0	200	155	890	576
14	V18	3,0	200	155	940	626

1798.55/07-EN

8 Optional: connection height 160 mm

Movitec H(S)I 6B, n = 3500 rpm

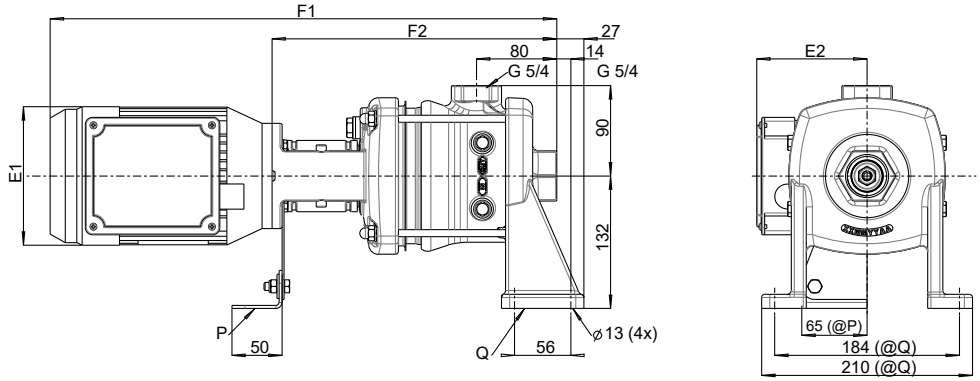

Fig. 11: Dimensions and connections of Movitec H(S)I 6 with V18 motor[9)]

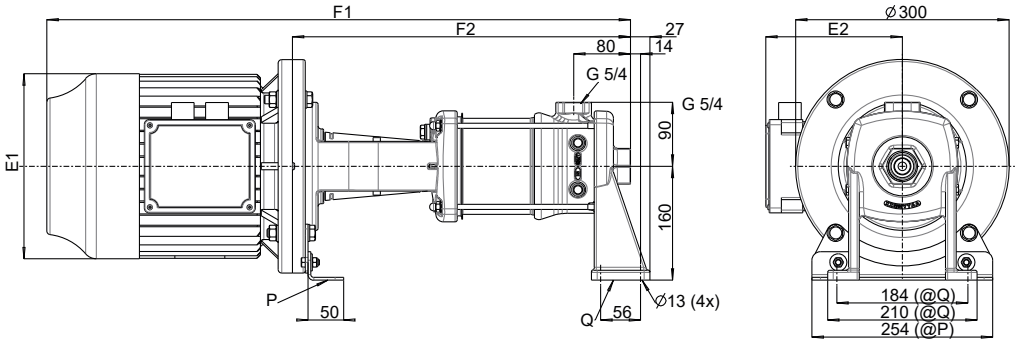

Fig. 12: Dimensions and connections of Movitec H(S)I 6 with V1 motor

Table 22: Dimensions

Number of stages	Motor	P_N	E1	E2	F1	F2
		[kW]	[mm]	[mm]	[mm]	[mm]
2	V18	0,75	157	133	563	306
3	V18	1,1	157	133	588	331
4	V18	1,5	180	145	619	366
5	V18	2,2	180	145	673	391
6	V18	2,2	180	145	698	416
7	V18	3,0	200	155	765	451
8	V18	3,0	200	155	790	476
9	V18	4,0	223	166	824	501
10	V18	4,0	223	166	849	526
11	V18	4,0	223	166	874	551
12	V18	5,5	260	190	998	652
14	V18	5,5	260	190	1048	702

9 Optional: connection height 160 mm

Movitec H(S)I 10B, n = 1450 rpm

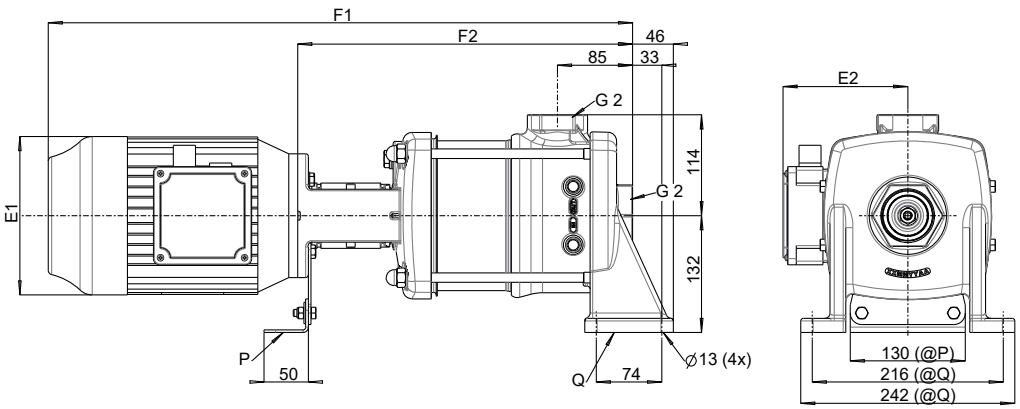

Fig. 13: Dimensions and connections of Movitec H(S)I 10 with V18 motor[10)]

Table 23: Dimensions

Number of stages	Motor	P_N	E1	E2	F1	F2
		[kW]	[mm]	[mm]	[mm]	[mm]
1	V18	0,55	157	112	597	351
2	V18	0,55	157	112	597	351
3	V18	0,55	157	112	623	377
4	V18	0,55	157	112	650	404
5	V18	0,55	157	112	676	430
6	V18	0,55	157	112	703	457
7	V18	0,55	157	112	729	483
8	V18	0,55	157	112	755	510

1798.55/07-EN

10 Optional: connection height 160 mm

Movitec H(S)I 10B, n = 1750 rpm

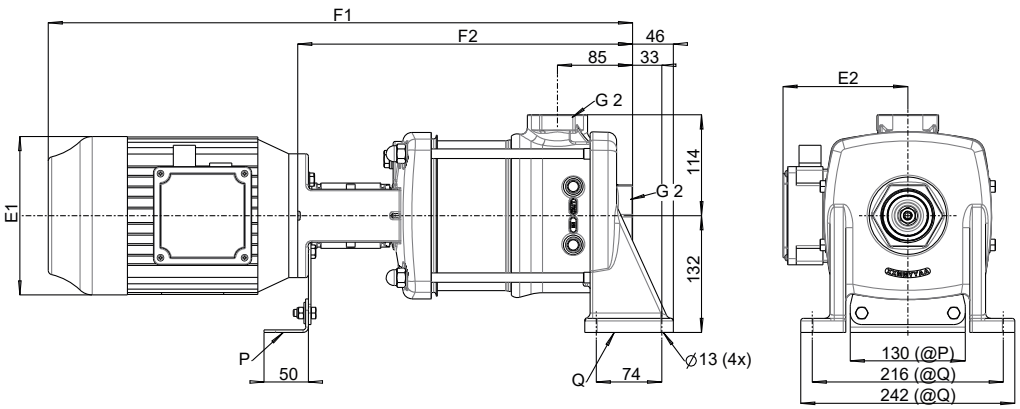

Fig. 14: Dimensions and connections of Movitec H(S)I 10 with V18 motor[11)]

Table 24: Dimensions

Number of stages	Motor	P_N	E1	E2	F1	F2
		[kW]	[mm]	[mm]	[mm]	[mm]
1	V18	0,55	157	112	597	351
2	V18	0,55	157	112	597	361
3	V18	0,55	157	112	623	377
4	V18	0,55	157	112	650	404
5	V18	0,55	157	112	676	430
6	V18	0,55	157	112	703	457
7	V18	0,55	157	112	729	483
8	V18	0,75	157	112	783	510

11 Optional: connection height 160 mm

Movitec H(S)I 10B, n = 2900 rpm

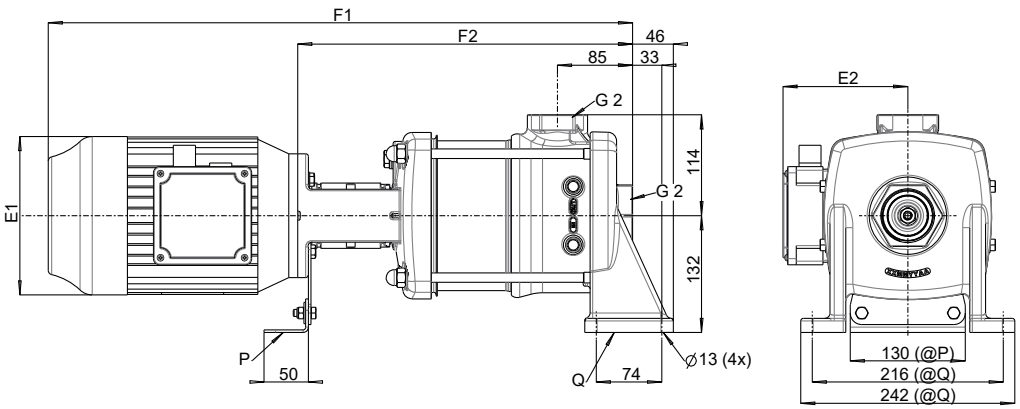

Fig. 15: Dimensions and connections of Movitec H(S)I 10 with V18 motor[12)]

Table 25: Dimensions

Number of stages	Motor	P_N	E1	E2	F1	F2
		[kW]	[mm]	[mm]	[mm]	[mm]
1	V18	0,75	157	133	626	351
2	V18	0,75	157	133	651	376
3	V18	1,1	157	133	677	402
4	V18	1,5	180	145	709	439
5	V18	2,2	180	145	750	465
6	V18	2,2	180	145	777	492
7	V18	3,0	200	155	858	528
8	V18	3,0	200	155	885	555

1798.55/07-EN

12 Optional: connection height 160 mm

Movitec H(S)I 10B, n = 3500 rpm

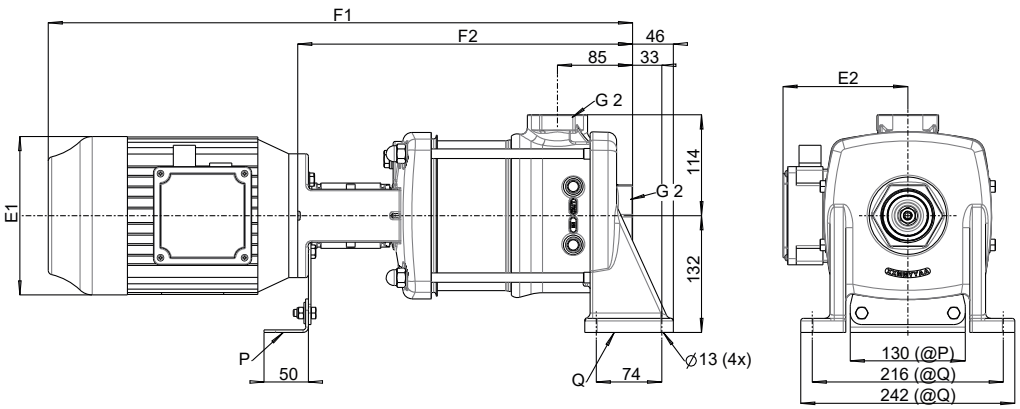

Fig. 16: Dimensions and connections of Movitec H(S)I 10 with V18 motor[13)]

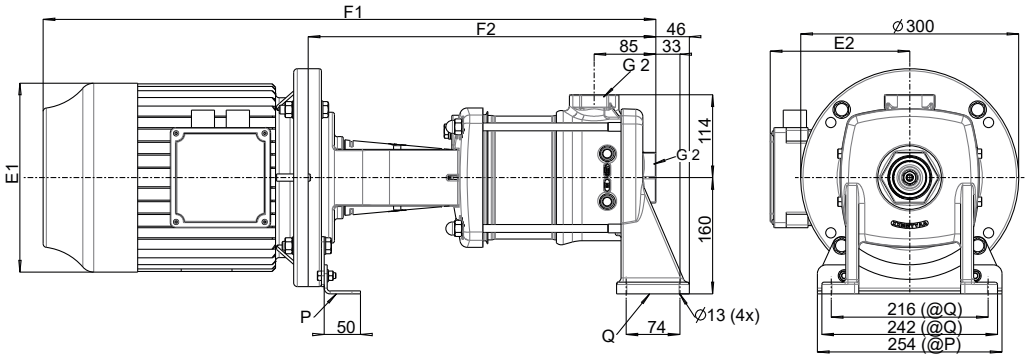

Fig. 17: Dimensions and connections of Movitec H(S)I 10 with V1 motor

Table 26: Dimensions

Number of stages	Motor	P_N	E1	E2	F1	F2
		[kW]	[mm]	[mm]	[mm]	[mm]
1	V18	0,75	157	133	626	351
2	V18	1,5	180	145	656	386
3	V18	2,2	180	145	697	412
4	V18	3,0	200	155	779	449
5	V18	4,0	223	166	815	475
6	V18	4,0	223	166	842	502
7	V1	5,5	260	190	973	608
8	V1	5,5	260	190	999	634

13 Optional: connection height 160 mm up to a maximum of 7 stages

Movitec H(S)I 15C, n = 1450 rpm

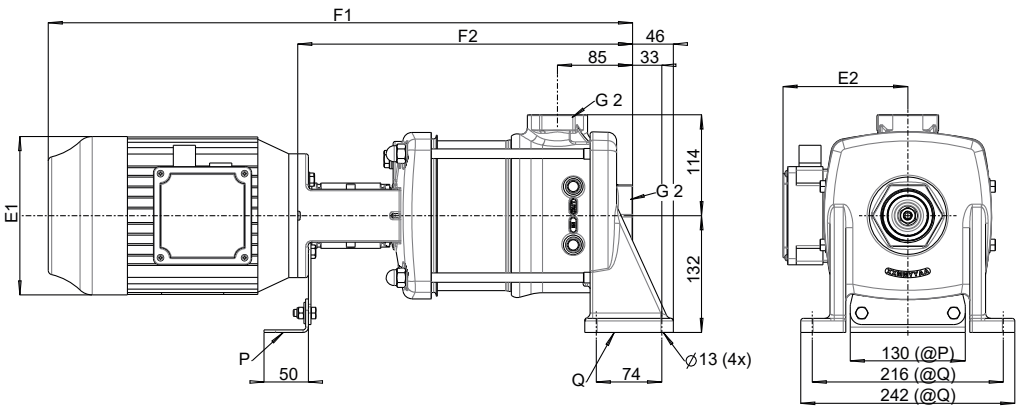

Fig. 18: Dimensions and connections of Movitec H(S)I 15 with V18 motor[14)]

Table 27: Dimensions

Number of stages	Motor	P_N	E1	E2	F1	F2
		[kW]	[mm]	[mm]	[mm]	[mm]
1	V18	0,55	157	112	616	359
2	V18	0,55	157	112	616	359
3	V18	0,55	157	112	657	400
4	V18	0,55	157	112	698	441
5	V18	0,75	157	133	739	482
6	V18	0,75	157	133	780	523
7	V18	1,1	180	145	849	574

14 Optional: connection height 160 mm

Movitec H(S)I 15C, n = 1750 rpm

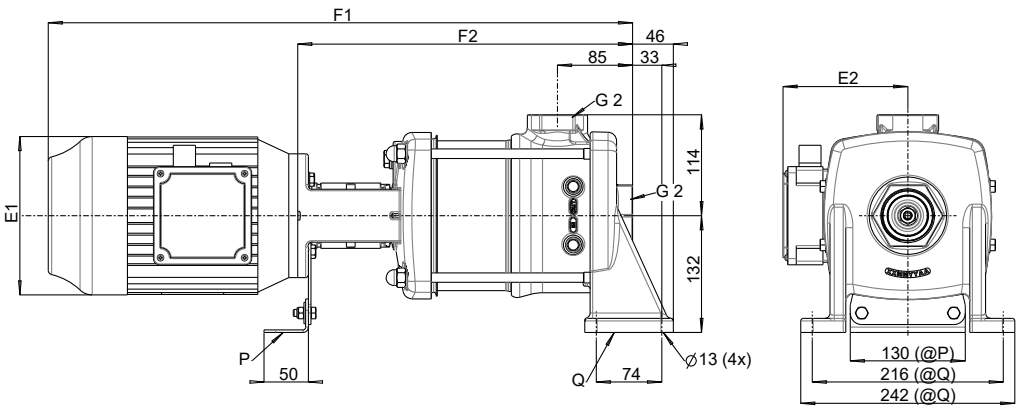

Fig. 19: Dimensions and connections of Movitec H(S)I 15 with V18 motor[15)]

Table 28: Dimensions

Number of stages	Motor	P_N	E1	E2	F1	F2
		[kW]	[mm]	[mm]	[mm]	[mm]
1	V18	0,55	157	112	616	359
2	V18	0,55	157	112	616	359
3	V18	0,75	157	133	657	400
4	V18	0,75	157	133	726	451
5	V18	1,1	180	145	767	492
6	V18	1,5	180	145	833	533
7	V18	1,5	180	145	874	574

15 Optional: connection height 160 mm

Movitec H(S)I, 15C, n = 2900 rpm

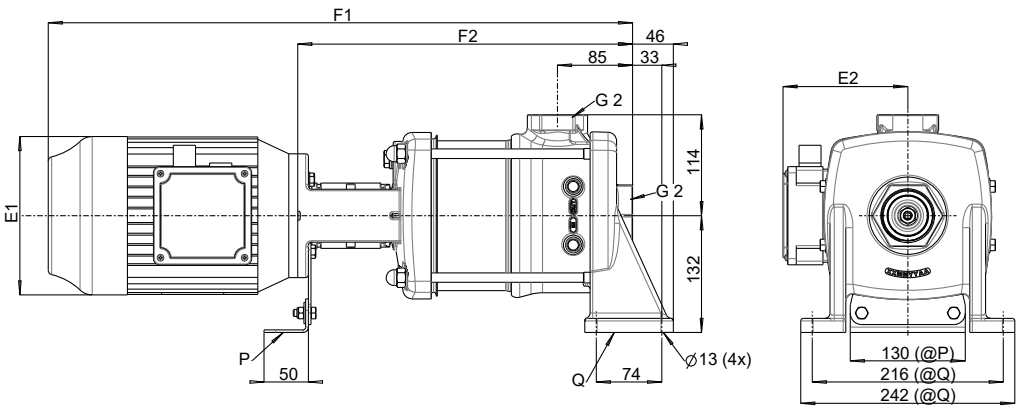

Fig. 20: Dimensions and connections of Movitec H(S)I 15 with V18 motor[16)]

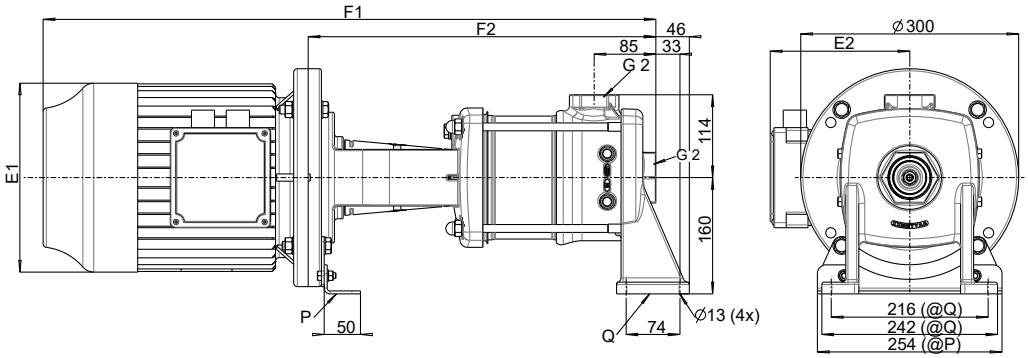

Fig. 21: Dimensions and connections of Movitec H(S)I 15 with V1 motor

Table 29: Dimensions

Number of stages	Motor	P_N	E1	E2	F1	F2
		[kW]	[mm]	[mm]	[mm]	[mm]
1	V18	1,1	157	133	616	359
2	V18	2,2	200	148	650	369
3	V18	3,0	215	157	737	420
4	V18	4,0	248	168	817	461
5	V1	5,5	288	197	1014	582
6	V1	7,5	288	197	1055	623
7	V1	7,5	288	197	1069	664

1798.55/07-EN

16 Optional: connection height 160 mm up to a maximum of 4 stages

Movitec H(S)I 15C, n = 3500 rpm

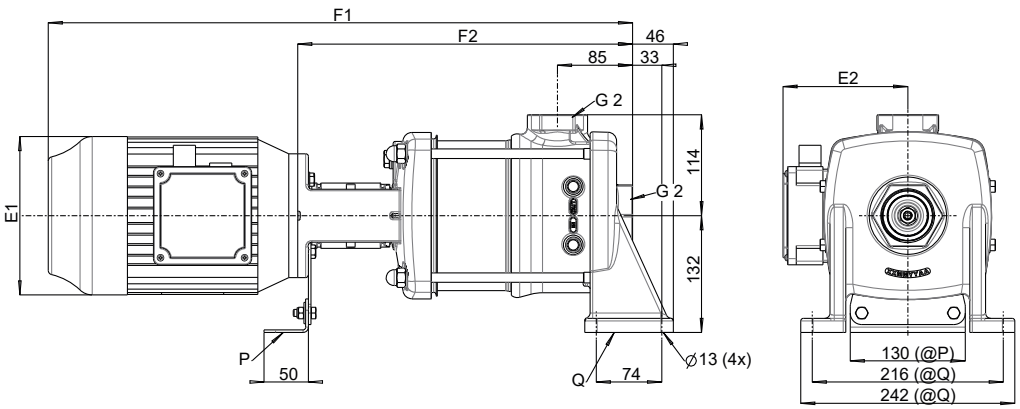

Fig. 22: Dimensions and connections of Movitec H(S)I 15 with V18 motor[17)]

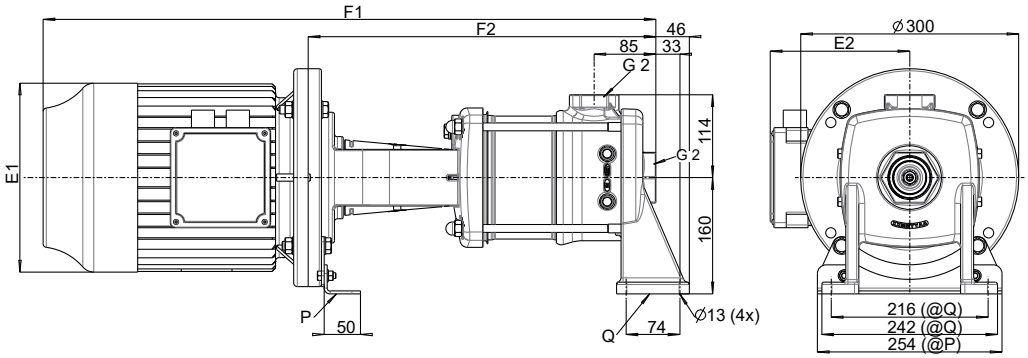

Fig. 23: Dimensions and connections of Movitec H(S)I 15 with V1 motor

Table 30: Dimensions

Number of stages	Motor	P_N	E1	E2	F1	F2
		[kW]	[mm]	[mm]	[mm]	[mm]
1	V18	2,2	200	148	650	369
2	V18	4,0	248	168	735	379
3	V1	5,5	288	197	932	499
4	V1	7,5	288	197	973	540

Scope of supply

Depending on the model, the following items are included in the scope of supply:

- Pump
- Electric motor

Accessories

Possible accessories:

- Frequency inverter, see type series booklet PumpDrive (4074.5)
- PumpMeter, see type series booklet (4072.5)

17 Optional: connection height 160 mm up to a maximum of 2 stages

General assembly drawing with list of components

Movitec H(S)I 2/4/6 B

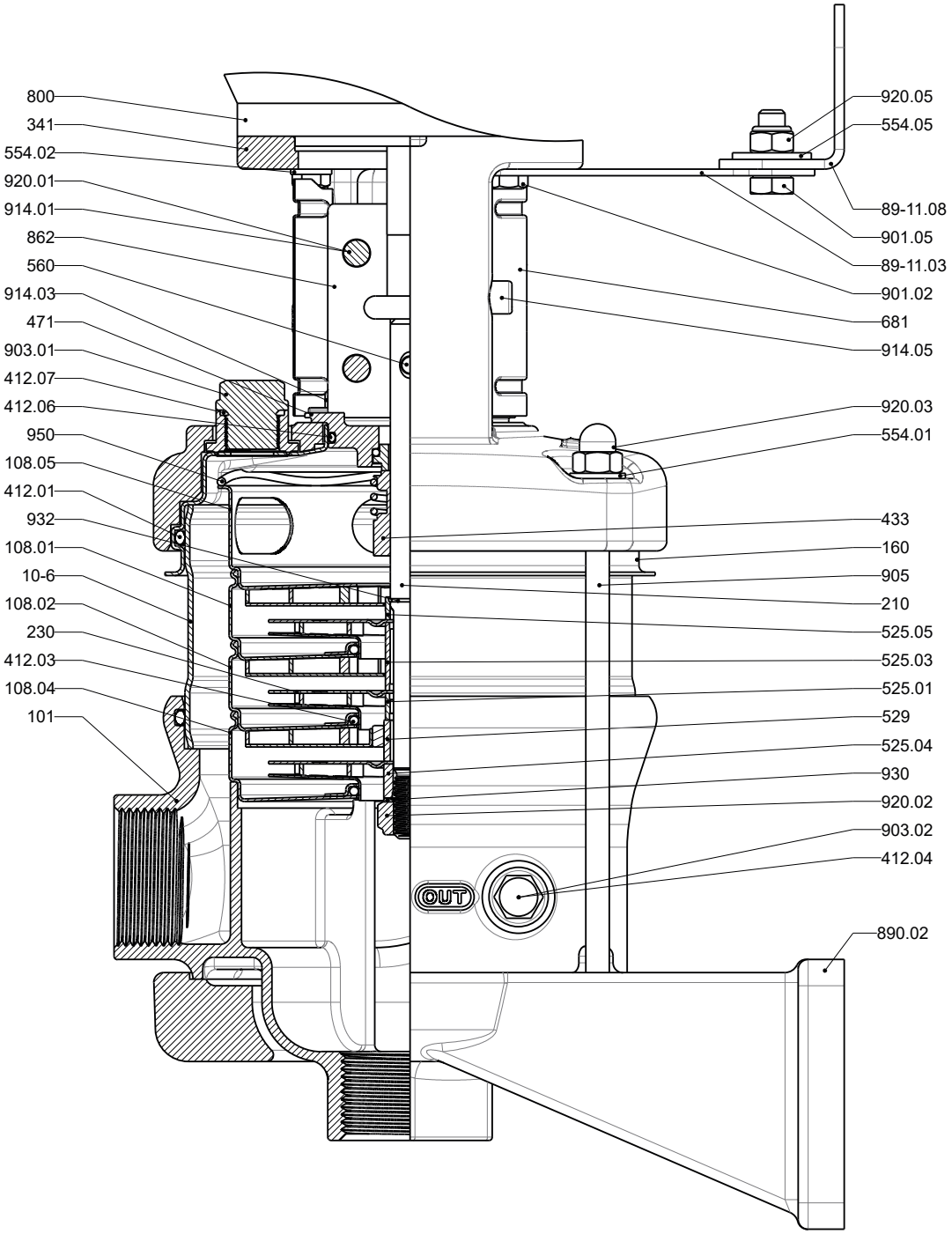

Fig. 24: General assembly drawing of Movitec H(S)I 2/4/6 B

Table 31: List of components

Part No.	Description	Part No.	Description
10-6	Pump shroud	681	Coupling guard
101	Pump casing	800	Motor
108.01/.02/.04/.05	Stage casing	862	Coupling shell
160	Cover	89-11.03/.08	Retaining bracket
210	Shaft	890.02	Baseplate
230	Impeller	901.02/.05	Hexagon head bolt
341	Drive lantern	903.01/.02	Screw plug
412.01/.03/.04/.06/.07	O-ring	905	Tie bolt

Part No.	Description	Part No.	Description
433	Mechanical seal	914.01/.03/.05	Hexagon socket head cap screw
471	Seal cover	920.01/.02/.03/.05	Nut
525.01/.03/.04/.05	Spacer sleeve	930	Safety device
529	Bearing sleeve	932	Circlip
554.01/.02/.05	Washer	950	Spring
560	Pin		

Movitec H(S)I 10 B

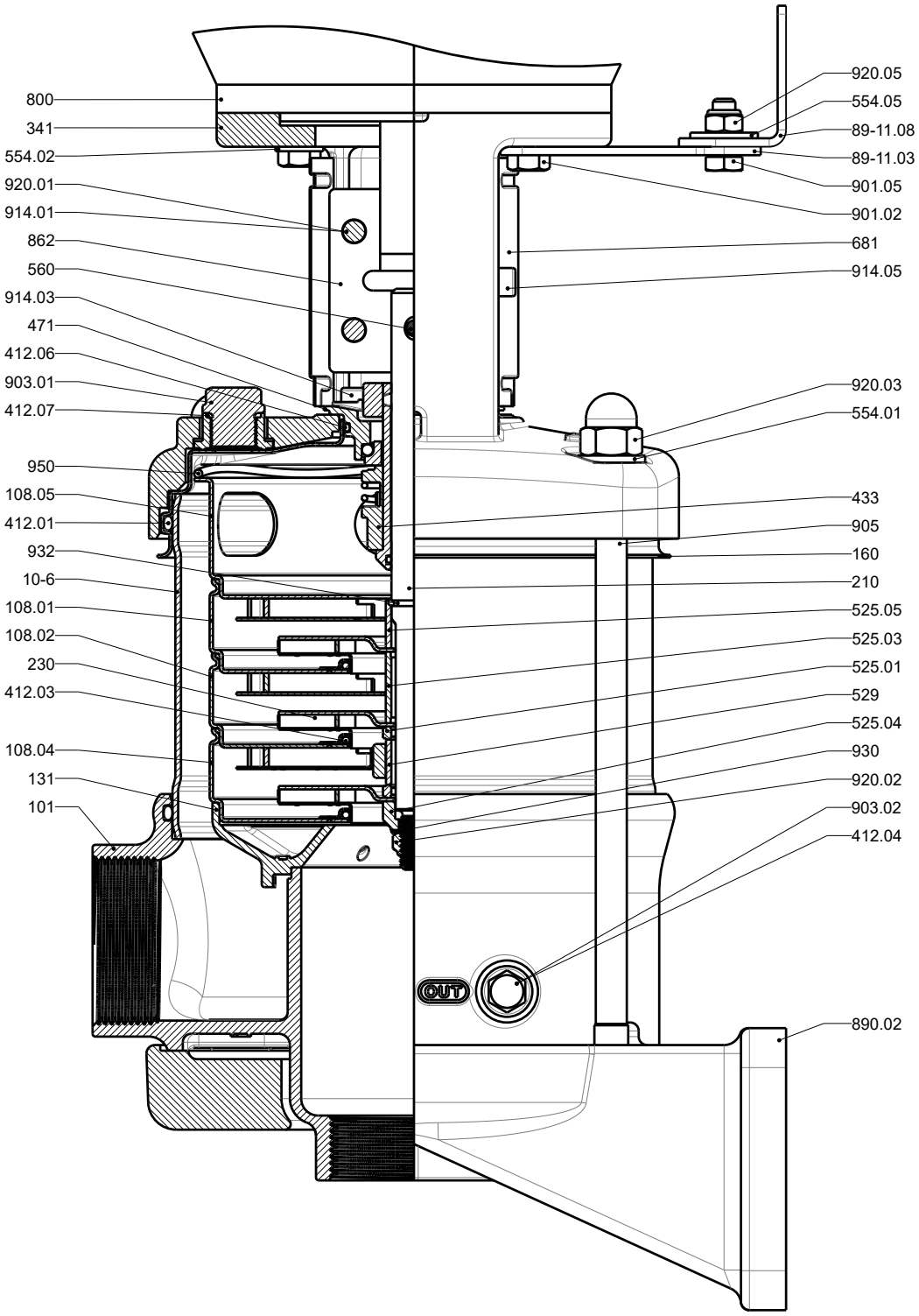

Fig. 25: General assembly drawing of Movitec H(S)I 10 B

Table 32: List of components

Part No.	Description	Part No.	Description
10-6	Pump shroud	560	Pin
101	Pump casing	681	Coupling guard
108.01/.02/.04/.05	Stage casing	800	Motor
131	Inlet ring	862	Coupling shell
160	Cover	89-11.03/.08	Retaining bracket
210	Shaft	890.02	Baseplate
230	Impeller	901.02/.05	Hexagon head bolt
341	Drive lantern	903.01/.02	Screw plug
412.01/.03/.04/.06/.07	O-ring	905	Tie bolt
433	Mechanical seal	914.01/.03/.05	Hexagon socket head cap screw
471	Seal cover	920.01/.02/.03/.05	Nut
525.01/.03/.04/.05	Spacer sleeve	930	Safety device
529	Bearing sleeve	932	Circlip
554.01/.02/.05	Washer	950	Spring

Movitec H(S)I 15 C

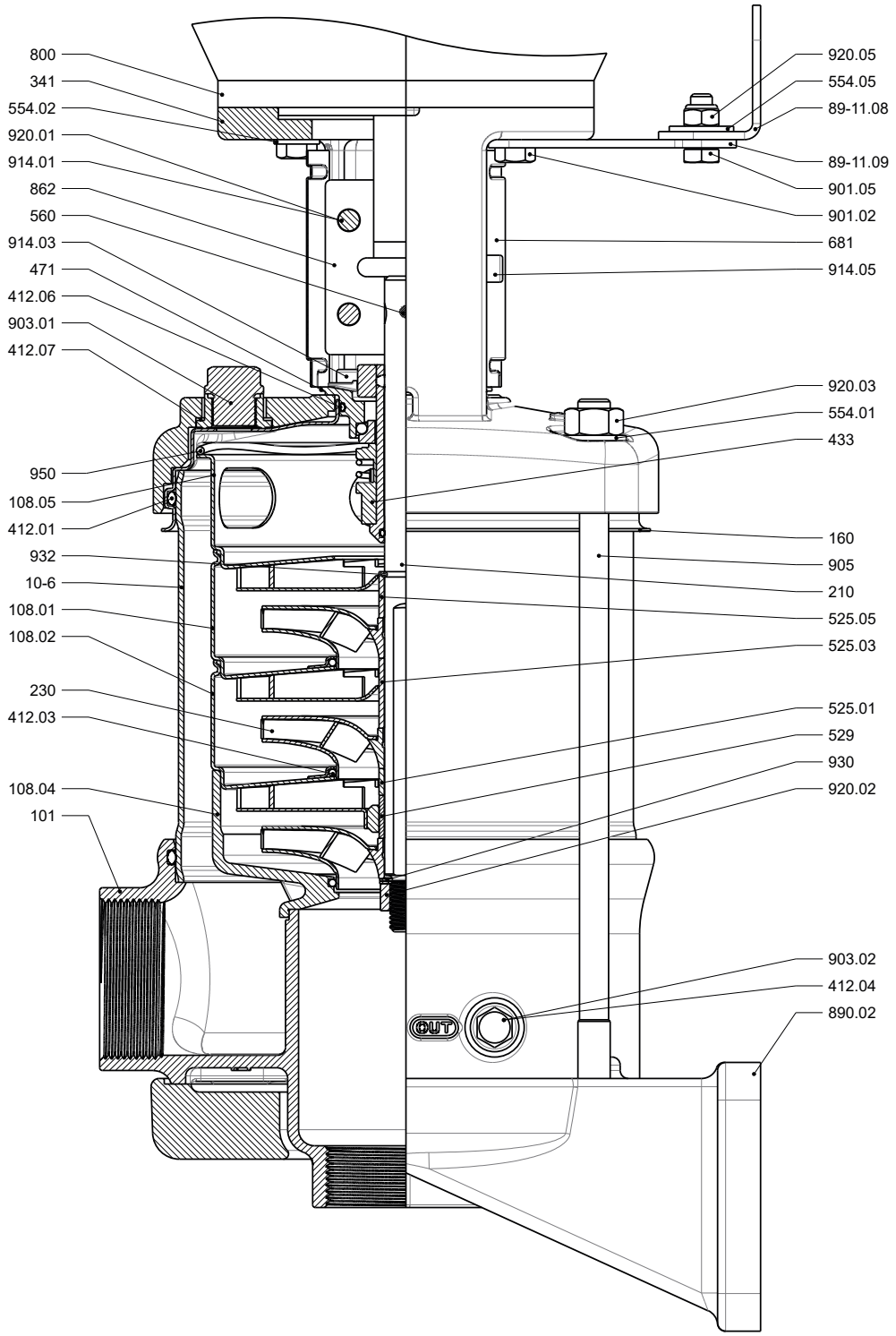

Fig. 26: General assembly drawing of Movitec H(S)I 15 C

Table 33: List of components

Part No.	Description	Part No.	Description
10-6	Pump shroud	681	Coupling guard
101	Pump casing	800	Motor
108.01/.02/.04/.05	Stage casing	862	Coupling shell
160	Cover	89-11.08/.09	Retaining bracket
210	Shaft	890.02	Baseplate
230	Impeller	901.02/.05	Hexagon head bolt

Part No.	Description	Part No.	Description
341	Drive lantern	903.01/.02	Screw plug
412.01/.03/.04/.06/.07	O-ring	905	Tie bolt
433	Mechanical seal	914.01/.03/.05	Hexagon socket head cap screw
471	Seal cover	920.01/.02/.03/.05	Nut
525.01/.03/.05	Spacer sleeve	930	Safety device
529	Bearing sleeve	932	Circlip
554.01/.02/.05	Washer	950	Spring
560	Pin		

1798.55/07-EN

2024-07-09

1798.55/07-EN

LENNTECH
WATER TREATMENT SOLUTIONS
info@lenntech.com Tel. +31-152-610-900
www.lenntech.com Fax. +31-152-616-289