LENNTECH
WATER TREATMENT SOLUTIONS

Multistage High-pressure Immersion Centrifugal Pump

Movitec VCI

Type Series Booklet

KSB

Legal information/Copyright

Type Series Booklet Movitec VCI

All rights reserved. The contents provided herein must neither be distributed, copied, reproduced, edited or processed for any other purpose, nor otherwise transmitted, published or made available to a third party without the manufacturer's express written consent.

Subject to technical modification without prior notice.

© KSB SE & Co. KGaA, Frankenthal 2024-07-11

Contents

Centrifugal Pumps 4
Multistage High-pressure Immersion Centrifugal Pumps 4
Movitec VCI 4
Main applications 4
Fluids handled 4
Operating data 4
Design details 4
Designation 5
Materials 6
Coating and preservation 7
Product benefits 7
Product information 7
Product information as per Regulation No. 1907/2006 (REACH) 7
Selection information 8
Minimum installation height 8
Fluid handled 8
Fluid temperature 8
Minimum level of fluid handled 8
Minimum flow rate 8
Permissible fluids 8
Overview of product features / selection tables 9
Overview of fluids handled 9
Shaft seal 10
Technical data 12
Movitec VCI B/C, cartridge mechanical seal 56, n = 2900 rpm 12
Movitec VCI B/C, cartridge mechanical seal 56, n = 3500 rpm 14
Selection chart 16
Movitec VCI, n = 2900 rpm 16
Movitec VCI, n = 3500 rpm 17
Characteristic curves 18
n = 2900 rpm 18
Movitec VCI 2B, n = 2900 rpm 18
Movitec VCI 4B, n = 2900 rpm 19
Movitec VCI 6B, n = 2900 rpm 20
Movitec VCI 10B, n = 2900 rpm 21
Movitec VCI 15C, n = 2900 rpm 22
n = 3500 rpm 23
Movitec VCI 2B, n = 3500 rpm 23
Movitec VCI 4B, n = 3500 rpm 24
Movitec VCI 6B, n = 3500 rpm 25
Movitec VCI 10B, n = 3500 rpm 26
Movitec VCI 15C, n = 3500 rpm 27
Dimensions and connections 28
Movitec VCI 2B, n = 2900 rpm 28
Movitec VCI 2B, n = 3500 rpm 30
Movitec VCI 4B, n = 2900 rpm 31
Movitec VCI 4B, n = 3500 rpm 32
Movitec VCI 6B, n = 2900 rpm 33
Movitec VCI 6B, n = 3500 rpm 34
Movitec VCI 10B, n = 2900 rpm 35
Movitec VCI 10B, n = 3500 rpm 36
Movitec VCI 15C, n = 2900 rpm 37
Movitec VCI 15C, n = 3500 rpm 38
General arrangement drawings with list of components 39
Movitec VCI 2B, 4B, 6B, 10B 39
Movitec VCI 15C 41

Centrifugal Pumps

Multistage High-pressure Immersion Centrifugal Pumps

Movitec VCI

Main applications

- Machine tools
- Industrial washing machines
- Condensate transport

Fluids handled

- Condensate
- Cooling lubricants
- Emulsions
- Lyes
- Oil

Operating data

Table 1: Operating properties

Characteristic		Value
Flow rate	Q [m³/h]	≤ 22,5
Head	H [m]	≤ 249
Fluid temperature	T [°C]	≥ -10
		≤ +120
Operating pressure	p [bar]	≤ 25

Design details

Design

- Multistage high-pressure immersion centrifugal pump

Optional:

- Blind stages

Installation

- Vertical installation

Drive

- Surface-cooled KSB squirrel-cage motor
- Thermal class F to IEC 34-1
- Efficiency class IE3 to IEC 60034-30 (≥ 0.75 kW)
- Enclosure IP55
- Frequency 50 Hz/60 Hz

Optional:

- Harting connector, type HAN 10E

Bearings

- Plain bearings

Shaft seal

- Uncooled, maintenance-free mechanical seal in cartridge design

1798.54/10-EN

Designation

Table 2: Designation example

Position																															
1	2	3	4	5	6	7	8	9	10	11	12	13	14	15	16	17	18	19	20	21	22	23	24	25	26	27	28	29	30	31	32
M	o	v	i	t	e	c	V	C	I	0	6	/	1	2	-	1	8	A	B	1	3	C	S	0	7	1	A	5	C	A	
See name plate and data sheet																		See data sheet													

Table 3: Designation key

Position	Code	Description	
1-7	Type series		
	Movitec		
8-9	Variant		
	VC	Grey cast iron	EN-GJL-250
	V-	Stainless steel	304 - 304
10	Connection type		
	I	Internal thread	
11-12	Size		
	002	2	
	...	...	
	015	15	
14-15	Number of stages		
	01	1	
	...	...	
	30	30	
17-18	Number of blind stages		
	01	1	
	...	...	
	30	30	
19	Connection standard		
	A	Internal thread	EN ISO 228-1
20	Product generation		
	B	Movitec from 2010	
	C	Movitec from 2021	
21-22	Seal code		
	51	A/ESIC-Q7 EGG/Y10	
	53	B/ESIC-Q7 EGG/Y10-WA	
	55	B/ESIC-Q7 VGG	
	56	B/ESIC-Q7 VGG/Y10	
	58	ESIC-Q7/ESIC-Q7 EGG/Y10-WA	
	61	ESIC-Q7/ESIC-Q7 VGG/Y10	
23	Mechanical seal design		
	C	Cartridge seal	
24	Drive		
	0	Without motor	
	2	With PumpDrive 2	
	E	With PumpDrive 2 Eco	
	S	Standard IEC	
25-27	Motor size		
	071	IEC 071	
	080	IEC 080	
	090	IEC 090	
	100	IEC 100	
	112	IEC 112	
	132	IEC 132	
	160	IEC 160	
28	Pressure class		
	A	PN 16 / PN 25	
	B	PN 25	
29	Frequency, number of motor poles		

Position	Code	Description
29	5	50 Hz, 2-pole
	6	60 Hz, 2-pole
	7	50 Hz, 4-pole
	8	60 Hz, 4-pole
30	Motor specification	
	C	230 / 400 V - IE2
	K	EXM IEC, Movitec
	M	230 V, single-phase AC motor
	U	230 / 400 V - IE3
	V	400 / 690 V - IE3
	W	230 / 400 V - IE4/IE5 (KSB SuPremE)
	X	400 / 690 V - IE4/IE5 (KSB SuPremE)
31	PumpMeter	
	W	Without PumpMeter
32	Design	
	-[1]	Standard
	X	Non-standard (BT3D, BT3)

Materials

Table 4: Overview of available materials

Part No.	Description	Material
106	Suction casing	EN-GJL-250
108	Stage casing	1.4301
160	Discharge cover	1.4301
210	Shaft	1.4057
230	Impeller	1.4301
341	Drive lantern	EN-GJL-250
412	O-ring	EPDM
525	Spacer ring	1.4301
529	Bearing sleeve	Tungsten carbide / aluminium oxide
905	Tie bolt	1.4057
920	Nut	1.4301
932	Circlip	1.4571

Table 5: Comparison of materials

EN	ASTM
EN-GJL-250	A48 Class 35 B
1.4057	SS 431
1.4301	SS 304
1.4571	SS 316Ti

1798.54/10-EN

1 Blank

Coating and preservation

Table 6: Coating of pump components

Component	Coating
Stainless steel components	No additional coating
Cast iron pump casing	Cataphoretic coating
Cast iron suction casing	Cataphoretic coating

Product benefits

- Top quality pump thanks to advanced high-precision production technology and durable high-grade materials
- Excellent reliability, enabled by compact, easy-to-replace cartridge seal and automatic return of small amounts of leakage into the tank
- An energy-saving, state-of-the-art pump solution characterised by high efficiency levels, optimum flow passage, the use of high-efficiency motors, and precision engineering of all hydraulic components
- Flexible use due to modular design, optional blind stages and versatile seal materials for a wide variety of applications, as well as numerous motor options
- Easy replacement of competitor products due to comparable dimensions
- High energy efficiency as well as low investment and maintenance costs make for low life cycle costs.

Product information

Product information as per Regulation No. 1907/2006 (REACH)

For information as per European chemicals regulation (EC) No. 1907/2006 (REACH) see https://www.ksb.com/en-global/company/corporate-responsibility/reach.

1798.54/10-EN

Selection information

Blind stages can be provided, depending on the immersion depth required.

Minimum installation height

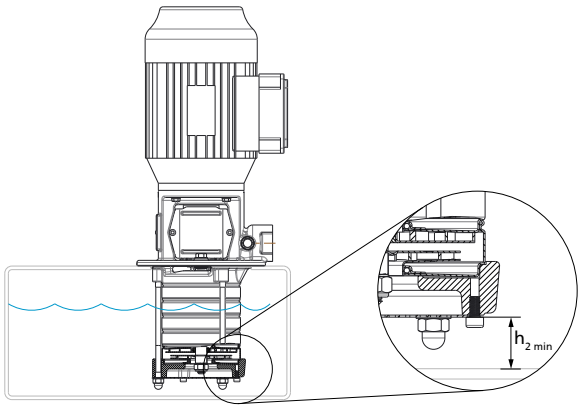

Fig. 1: Minimum installation height

Table 7: Minimum installation height ($h_{2\ min}$)

Size	$h_{2\ min}$ [mm]
2B	25
4B	25
6B	25
10B	40
15C	40

Fluid handled

The actual operating conditions must always be checked (concentration, temperature, solids content). Penetration of air into the system must be avoided by all means.

If the fluid handled contains solids such as steel chips or steel chip dust, check the permissible particle concentration with KSB.

Fluid temperature

Permissible temperature range: -10 °C to +90 °C

Minimum level of fluid handled

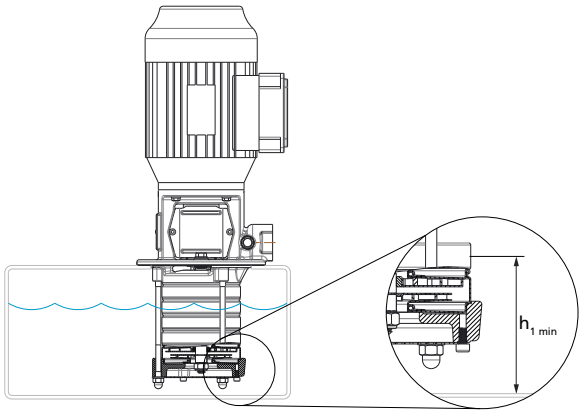

Fig. 2: Minimum level of fluid handled

Table 8: Minimum level of fluid handled ($h_{1\ min}$)

Size	$h_{1\ min}$ [mm]
2B	61
4B	61
6B	61
10B	82
15C	82

Minimum flow rate

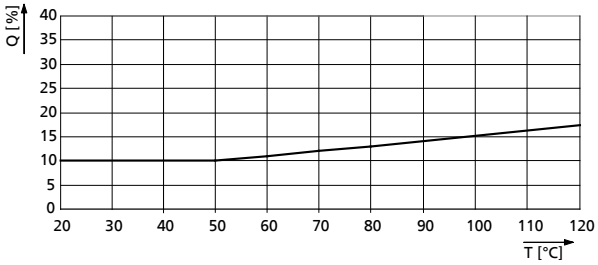

Fig. 3: Minimum flow rate required as a function of fluid temperature at a fluid temperature > +20 °C

Table 9: Minimum flow rate (Q_{min}) at a fluid temperature of ≤ 20 °C depending on the frequency

Size	Q_{min}	
	50 Hz	60 Hz
	[m³/h]	[m³/h]
2B	0,2	0,2
4B	0,4	0,5
6B	0,6	0,8
10B	1,1	1,3
15C	1,6	2,3

Permissible fluids

If the operating conditions differ from the data given (e.g. mixed products) or if the fluids handled are not included in the table below, please contact KSB.

1798.54/10-EN

Overview of product features / selection tables

Overview of fluids handled

The data refer to the chemical resistance of the materials. The relevant regulations / standards governing individual pump applications must be complied with.

If the operating conditions differ from the data given (e.g. mixed products) or if the fluids handled are not included in the table below, please consult us for details.

- **Temperature ranges:**
  - Reference temperature: +20 °C
  - For temperatures <0 °C: consult us.
  - For temperatures > +50 °C: check and observe the vapour pressure of the fluid handled.
  - Max. temperature = +120 °C, unless indicated otherwise.
- Max. concentration = 100 % unless indicated otherwise.
- Mechanical seal silicon carbide / carbon (Q1B): not suitable for fluids containing solid substances. This also applies to fluids which may contain particles developing as a result of salt crystallisation at low fluid temperatures.
- Mechanical seal tungsten carbide / tungsten carbide (U3U3): solids content max. 20 ppm (depending on particle size), with the exception of corrosive fluids. Fluids with a higher solids content are not permitted (ppm = 1 mg/kg).
- Caution: High temperatures will increase corrosion (reference temperature = +20 °C).
- The density and/or viscosity may vary. This leads to different operating conditions and affects the motor rating required.

Table 10: Symbols key

Symbol	Description
✗	Standard
o	Optional
-	Version not available / not feasible

Table 11: Mechanical seal selection depending on the fluid to be handled

Fluid handled			2-4-6					10-15				
Substance contained	Max. percentage	$T_{max.}$	Seal code									
	[%]	[°C]	50	54	55	60	66	51	53	56	61	66
Alkaline solution, bottle rinsing, max. 2 % sodium hydroxide	≤ 100	+90	o	-	-	-	-	o	-	-	-	-
Alcohol												
▪ Butanol	≤ 100	+60	✗	-	-	-	-	✗	-	-	-	-
▪ Ethanol	≤ 100	+60	✗	-	-	-	-	✗	-	-	-	-
▪ Propanol	≤ 100	+80	✗	-	-	-	-	✗	-	-	-	-
Ammonium bicarbonate	≤ 10	+40	o	-	-	-	-	o	-	-	-	-
Calcium acetate	≤ 10	+60	o	-	-	-	-	o	-	-	-	-
Water-oil emulsion (95 %, 5 %), free of solids	≤ 100	+80	-	-	✗	-	✗	-	-	✗	-	✗
Ethylene glycol base antifreeze, inhibited, closed system	≤ 20	+100	o	-	-	-	-	o	-	-	-	-
	≤ 25	+100	o	-	-	-	-	o	-	-	-	-
	≤ 30	+100	o	-	-	-	-	o	-	-	-	-
	≤ 35	+100	o	-	-	-	-	o	-	-	-	-
	≤ 40	+100	o	-	-	-	-	o	-	-	-	-
	≤ 45	+100	o	-	-	-	-	o	-	-	-	-
	≤ 50	+100	o	-	-	-	-	o	-	-	-	-
Glycerine	≤ 40	+80	✗	-	✗	✗	-	✗	-	✗	✗	-
Potassium hydroxide	≤ 5	+40	o	-	-	-	-	o	-	-	-	-
Potassium nitrate	≤ 5	+30	o	-	-	-	-	o	-	-	-	-
Potassium sulphate	≤ 2	+20	o	-	✗	-	-	o	-	✗	-	-
Sodium carbonate	≤ 6	+60	o	-	-	-	-	o	-	-	-	-
Sodium hydroxide	≤ 5	+60	o	-	-	-	-	o	-	-	-	-
Sodium nitrate	≤ 10	+60	o	-	-	-	-	o	-	-	-	-
Sodium sulphate	≤ 5	+60	o	-	✗	-	-	o	-	✗	-	-
Oil												
▪ Cutting oil	≤ 100	+90	-	-	-	✗	-	-	-	-	✗	-
▪ Peanut oil	≤ 100	+80	-	-	✗	o	-	-	-	✗	o	-

Fluid handled			2-4-6					10-15				
Substance contained	Max. percentage	$T_{max.}$	Seal code									
	[%]	[°C]	50	54	55	60	66	51	53	56	61	66
▪ Linseed oil	≤ 100	+60	-	-	✗	o	-	-	-	✗	o	-
▪ Corn oil	≤ 100	+80	-	-	✗	o	-	-	-	✗	o	-
▪ Olive oil	≤ 100	+80	-	-	✗	o	-	-	-	✗	o	-
▪ Rapeseed oil	≤ 100	+80	-	-	✗	o	-	-	-	✗	o	-
▪ Soybean oil	≤ 100	+100	-	-	✗	o	-	-	-	✗	o	-
Trisodium phosphate	≤ 4	+80	-	-	o	✗	-	-	-	o	✗	-
Water												
▪ Clean water	≤ 100	+60	✗	✗	-	-	-	✗	✗	-	-	-
▪ Fire-fighting water	≤ 100	+60	✗	✗	-	-	-	✗	✗	-	-	-
▪ Hot water treated in accordance with VdTÜV 1466	≤ 100	+120	✗	-	-	-	-	✗	-	-	-	-
▪ Heating water in accordance with VDI 2035	≤ 100	+100	✗	-	-	-	-	✗	-	-	-	-
▪ Boiler feed water to VdTÜV 1466	≤ 100	+120	✗	o	-	-	-	✗	o	-	-	-
▪ Condensate treated in acc. with VdTÜV 1466	≤ 100	+120	✗	-	-	-	-	✗	-	-	-	-
▪ Vapour condensate (brewery)	≤ 100	+120	✗	-	-	-	-	✗	-	-	-	-
▪ Cooling water	≤ 100	+100	o	-	-	-	-	o	-	-	-	-
▪ River water	≤ 100	+60	o	-	-	-	-	o	-	-	-	-
▪ Surface water	≤ 100	+60	o	-	-	-	-	o	-	-	-	-
▪ Lake water (fresh water)	≤ 100	+60	o	-	-	-	-	o	-	-	-	-
▪ Dam water	≤ 100	+60	o	-	-	-	-	o	-	-	-	-
▪ Rinsing water, without particles of oil, acids or lyes	≤ 100	+70	o	✗	-	-	-	o	✗	-	-	-
▪ Barrier water	≤ 100	+70	o	✗	-	-	-	o	✗	-	-	-
▪ Rainwater, with strainer	≥ 20	+60	o	-	-	-	-	o	-	-	-	-
▪ Raw water	≤ 100	+60	o	-	-	-	-	o	-	-	-	-
▪ Grey water, slightly contaminated water without particles, e.g. sand	≤ 100	+60	-	-	-	-	-	-	-	-	-	-
▪ Tap water	≤ 100	+60	o	✗	-	-	-	o	✗	-	-	-
▪ Brewing water	≤ 100	+60	-	✗	-	-	-	-	✗	-	-	-
▪ Ice water (brewery)	≤ 100	+60	-	✗	-	-	-	-	✗	-	-	-
▪ Hot water (brewery)	≤ 100	+60	-	✗	-	-	-	-	✗	-	-	-
▪ Water containing lime	≤ 100	+90	-	✗	-	-	-	-	✗	-	-	-

Shaft seal

Table 12: Available mechanical seals

Seal code	Type	Material				Unpressurised shaft seal	T		Elastomer material of pump
		Mechanical seal	Shaft seal				Min.	Max.	
			Rotor	Stator	Elastomer		[°C]	[°C]	
50	RMG12-G6	A Q7 E GG	Ca	eSiC	EPDM	PN25 (PN18)	-20	+120 (+140)	EPDM 559236
51	eRMG12-G6	A Q7 E GG Y10	Ca	eSiC	EPDM	PN25 (PN18)	-20	+120 (+140)	EPDM
53	eMG12-G6	B Q7 E GG Y10 WA	Ca	eSiC	EPDM	PN25	-20	+100	EPDM
54	MG12-G6	B Q7 E GG WA	Ca	eSiC	EPDM	PN25	-20	+100	EPDM
55	RMG12-G6	B Q7 V GG	Ca	eSiC	FPM	PN25	-20	+120	FPM
56	eRMG12-G6	B Q7 V GG Y10	Ca	eSiC	FPM	PN25	-20	+120	FPM
60	RMG12-G6	Q7 Q7 V GG	eSiC	eSiC	FPM	PN18	-20	+120	FPM

Seal code	Type	Material				Unpressurised shaft seal	T		Elastomer material of pump
		Mechanical seal	Shaft seal				Min.	Max.	
			Rotor	Stator	Elastomer		[°C]	[°C]	
61	eRMG12-G6	Q7 Q7 V GG Y10	eSiC	eSiC	FPM	PN18	-20	+120	FPM
65	eRMG12-G6	U3 U3 V GG Y10	TuC	TuC	FPM	PN18	-20	+120	FPM
66	eMG12-G6	Q7 Q7 V GG Y10	eSiC	eSiC	FPM	PN20	-20	+60	FPM

Table 13: Key to mechanical seal materials

Description	Code to EN 12756	Seal face materials / secondary seals
Primary ring	A	Carbon graphite, antimony-impregnated
	U3	Tungsten carbide (CrNiMo binder)
	eCarb-B	Carbon graphite, resin-impregnated
	eSiC-Q7	Silicon carbide
Mating ring	U3	Tungsten carbide (CrNiMo binder)
	eSiC-Q7	Silicon carbide
Elastomer	E	EPDM (ethylene propylene rubber)
	V	FPM (fluoroelastomer)
	X4	HNBR
Spring	G	CrNiMo steel
Other metal parts	G	CrNiMo steel

Technical data

Movitec VCI B/C, cartridge mechanical seal 56, n = 2900 rpm

56 = mechanical seal code B/ESIC-Q7 VGG/Y10

Table 14: Technical data, 50 Hz

Size	P_N	I_N	I_N	Version with seal code 56 (B/ESIC-Q7 VGG/Y10)	
	$P_N \geq 0,75$ kW = IE3	3~230 / 400 V	3~400 / 690 V		
	[kW]	[A]	[A]	Mat. No.	[kg]
02/02-02 B	0,37	1,64/0,94	-	05267343	14.1
02/03-03 B	0,37	1,64/0,94	-	05267344	14.5
02/04-04 B	0,37	1,64/0,94	-	05267345	14.8
02/05-05 B	0,37	1,64/0,94	-	05267346	15.2
02/06-06 B	0,55	2,31/1,33	-	05267347	16.3
02/07-07 B	0,55	2,31/1,33	-	05267348	16.7
02/08-08 B	0,55	2,31/1,33	-	05267349	17
02/09-09 B	0,75	2,92/1,68	-	05267350	18.6
02/10-10 B	0,75	2,92/1,68	-	48021266	19
02/11-11 B	1,10	4,17/2,40	-	48021267	21.9
02/12-12 B	1,10	4,17/2,40	-	48021268	22.2
02/14-14 B	1,10	4,17/2,40	-	48021269	22.9
02/16-16 B	1,50	5,08/2,92	-	48021270	30.3
02/18-18 B	1,50	5,08/2,92	-	48021271	31
02/20-20 B	1,50	5,08/2,92	-	48021272	31.7
02/22-22 B	2,20	7,22/4,15	-	48021273	34.7
02/24-24 B	2,20	7,22/4,15	-	48021274	35.4
02/26-26 B	2,20	7,22/4,15	-	48021275	36.2
02/28-28 B	2,20	7,22/4,15	-	48021657	36.9
02/30-30 B	2,20	7,22/4,15	-	48021658	37.6
04/02-02 B	0,37	1,64/0,94	-	05267787	14
04/03-03 B	0,55	2,31/1,33	-	05267788	15.1
04/04-04 B	0,55	2,31/1,33	-	05267789	15.4
04/05-05 B	0,75	2,92/1,68	-	05267790	17.1
04/06-06 B	1,10	4,17/2,40	-	48021344	19.9
04/07-07 B	1,10	4,17/2,40	-	48021345	20.2
04/08-08 B	1,50	5,08/2,92	-	48021346	27.2
04/09-09 B	1,50	5,08/2,92	-	48021347	27.5
04/10-10 B	1,50	5,08/2,92	-	48021348	27.8
04/11-11 B	2,20	7,22/4,15	-	48021349	30.4
04/12-12 B	2,20	7,22/4,15	-	48021350	30.7
04/14-14 B	2,20	7,22/4,15	-	48021351	31.4
04/16-16 B	3,00	-	5,59/3,24	48021352	39.7
04/18-18 B	3,00	-	5,59/3,24	48021353	40.3
04/20-20 B	3,00	-	5,59/3,24	48021354	41
04/22-22 B	4,00	-	7,45/4,32	48021355	45.1
04/24-24 B	4,00	-	7,45/4,32	48021356	45.7
04/26-26 B	4,00	-	7,45/4,32	48021357	46.4
04/26-28 B	4,00	-	7,45/4,32	48021358	46.7
04/26-30 B	4,00	-	7,45/4,32	48021359	47
06/02-02 B	0,37	1,64/0,94	-	05268213	14.1
06/03-03 B	0,75	2,92/1,68	-	05268214	16.6
06/04-04 B	1,10	4,17/2,40	-	48021433	19.4
06/05-05 B	1,10	4,17/2,40	-	48021434	19.8
06/06-06 B	1,50	5,08/2,92	-	05268216	26.8
06/07-07 B	1,50	5,08/2,92	-	48021435	27.2
06/08-08 B	2,20	7,22/4,15	-	48021436	29.9
06/09-09 B	2,20	7,22/4,15	-	48021437	30.2
06/10-10 B	2,20	7,22/4,15	-	48021438	30.6
06/11-11 B	3,00	-	5,59/3,24	48021439	38.7
06/12-12 B	3,00	-	5,59/3,24	48021440	39

Size	P_N	I_N	I_N	Version with seal code 56 (B/ESIC-Q7 VGG/Y10)	
	$P_N \geq 0,75$ kW = IE3	3~230 / 400 V	3~400 / 690 V		
	[kW]	[A]	[A]	Mat. No.	[kg]
06/14-14 B	3,00	-	5,59/3,24	48021441	39.7
06/16-16 B	4,00	-	7,45/4,32	48021442	43.9
06/18-18 B	4,00	-	7,45/4,32	48021443	44.6
06/20-20 B	5,50	-	10,00/5,80	48021444	70.1
06/22-22 B	5,50	-	10,00/5,80	48021445	70.8
06/24-24 B	5,50	-	10,00/5,80	05268217	71.6
06/26-26 B	5,50	-	10,00/5,80	05268218	72.3
06/28-28 B	5,50	-	10,00/5,80	48021446	72.6
06/26-30 B	5,50	-	10,00/5,80	48021447	73
10/01-02 B	0,75	2,92/1,68	-	48021179	21.1
10/02-02 B	0,75	2,92/1,68	-	48021180	21.5
10/03-03 B	1,10	4,17/2,40	-	05268554	24.6
10/04-04 B	1,50	5,08/2,92	-	48021181	32.5
10/05-05 B	2,20	7,22/4,15	-	48021182	35.4
10/06-06 B	2,20	7,22/4,15	-	48021183	36.1
10/07-07 B	3,00	-	5,59/3,24	48021184	44.5
10/08-08 B	3,00	-	5,59/3,24	48021185	45.2
10/09-09 B	4,00	-	7,45/4,32	48021186	49.3
10/10-10 B	4,00	-	7,45/4,32	48021187	50
10/11-11 B	4,00	-	7,45/4,32	48021188	50.7
10/13-13 B	5,50	-	10,00/5,80	48021189	77.8
10/15-15 B	5,50	-	10,00/5,80	48021190	79.1
10/17-17 B	7,50	-	13,40/7,74	48021659	86
10/19-19 B	7,50	-	13,40/7,74	48021660	37.4
10/21-21 B	7,50	-	13,40/7,74	48021661	88.7
15/01-02 C	1,10	4,17/2,40	-	05272003	24.8
15/02-02 C	2,20	7,50/4,30	-	05272004	34.7
15/03-03 C	3,00	-	5,80/3,30	05272005	43
15/04-04 C	4,00	-	12,80/7,40	05272006	53.4
15/05-05 C	5,50	-	17,30/10,0	05272007	94.2
15/06-06 C	5,50	-	23,0/13,30	05272008	99.7
15/07-07 C	7,50	-	23,0/13,30	05272009	97.4
15/08-08 C	11,00	-	33,40/19,30	05272010	158.5
15/09-09 C	11,00	-	33,40/19,30	05272011	159.9
15/10-10 C	11,00	-	33,40/19,30	05272012	156.3
15/11-11 C	11,00	-	33,40/19,30	05272013	162.5
15/13-13 C	15,00	-	45,40/26,20	05272014	175.3
15/15-15 C	15,00	-	45,40/26,20	05272015	178.6
15/17-17 C	18,50	-	55,60/32,10	05272016	191.3

Movitec VCI B/C, cartridge mechanical seal 56, n = 3500 rpm

56 = mechanical seal code B/ESIC-Q7 VGG/Y10

Table 15: Technical data, 60 Hz

Size	P_N	I_N	Version with seal code 56 (B/ESIC-Q7 VGG/Y10)	
	$P_N \geq 0,75$ kW = IE3	3~230 / 400 V		
	[kW]	[A]	Mat. No.	[kg]
02/02-02 B	0,37	1,54/0,89	05267351	14.1
02/03-03 B	0,37	1,54/0,89	05267352	14.5
02/04-04 B	0,55	2,29/1,32	05267353	15.6
02/05-05 B	0,75	2,87/1,65	48021276	17.3
02/06-06 B	0,75	2,87/1,65	48021277	17.6
02/07-07 B	1,10	4,11/2,36	48021278	20.5
02/08-08 B	1,10	4,11/2,36	48021279	20.8
02/09-09 B	1,10	4,11/2,36	48021280	21.1
02/10-10 B	1,50	5,01/2,88	48021281	28.2
02/11-11 B	1,50	5,01/2,88	48021282	28.6
02/12-12 B	1,50	5,01/2,88	48021283	28.9
02/14-14 B	2,20	7,12/4,09	48021284	31.9
02/16-16 B	2,20	7,12/4,09	48021285	32.8
02/18-18 B	2,20	7,12/4,09	48021286	33.3
02/20-20 B	3,00	9,57/5,51	48021287	41.7
02/22-22 B	3,00	9,57/5,51	48021288	42.5
02/22-24 B	3,00	9,57/5,51	48021289	42.8
02/22-26 B	3,00	9,57/5,51	48021290	43.1
02/22-28 B	3,00	9,57/5,51	48021291	43.5
02/22-30 B	3,00	9,57/5,51	48021292	43.8
04/02-02 B	0,55	2,29/1,32	05267791	14.8
04/03-03 B	0,75	2,87/1,65	48021360	16.4
04/04-04 B	1,10	4,11/2,36	48021361	19.2
04/05-05 B	1,50	5,01/2,88	48021362	26.2
04/06-06 B	1,50	5,01/2,88	48021363	26.6
04/07-07 B	2,20	7,12/4,09	48021364	29.2
04/08-08 B	2,20	7,12/4,09	48021365	29.5
04/09-09 B	3,00	9,57/5,51	48021366	37.5
04/10-10 B	3,00	9,57/5,51	48021367	37.8
04/11-11 B	3,00	9,57/5,51	48021368	38.2
04/12-12 B	4,00	12,80/7,34	48021369	41.8
04/14-14 B	4,00	12,80/7,34	48021370	42.4
04/16-16 B	5,50	17,10/9,86	48021371	68
04/18-18 B	5,50	17,10/9,86	48021372	68.6
04/18-20 B	5,50	17,10/9,86	48021373	68.9
04/18-22 B	5,50	17,10/9,86	48021374	69.2
04/18-24 B	5,50	17,10/9,86	48021375	69.6
04/18-26 B	5,50	17,10/9,86	48021376	69.7
04/18-28 B	5,50	17,10/9,86	48021377	70.2
04/18-30 B	5,50	17,10/9,86	48021378	70.5
06/02-02 B	0,75	2,87/1,65	48021448	16.2
06/03-03 B	1,10	4,11/2,36	48021449	19.1
06/04-04 B	1,50	5,01/2,88	48021450	26.1
06/05-05 B	2,20	7,12/4,09	48021451	28.8
06/06-06 B	2,20	7,12/4,09	48021452	29.1
06/07-07 B	3,00	9,57/5,51	48021453	37.3
06/08-08 B	3,00	9,57/5,51	48021454	37.6
06/09-09 B	4,00	12,80/7,34	48021455	41.3
06/10-10 B	4,00	12,80/7,34	48021456	41.6
06/11-11 B	4,00	12,80/7,34	48021457	42
06/12-12 B	5,50	17,10/9,86	48021458	67.3
06/14-14 B	5,50	17,10/9,86	48021459	68
06/16-16 B	7,50	22,90/13,20	48021460	74.2

Size	P_N	I_N	Version with seal code 56 (B/ESIC-Q7 VGG/Y10)	
	$P_N \geq 0,75$ kW = IE3	3~230 / 400 V		
	[kW]	[A]	Mat. No.	[kg]
06/18-18 B	7,50	22,90/13,20	48021461	74.9
06/18-20 B	7,50	22,90/13,20	48021462	75.3
06/18-22 B	7,50	22,90/13,20	48021463	75.6
06/18-24 B	7,50	22,90/13,20	48021464	76
06/18-26 B	7,50	22,90/13,20	48021465	76.3
06/18-28 B	7,50	22,90/13,20	48021466	76.6
06/18-30 B	7,50	22,90/13,20	48021467	77
10/01-02 B	0,75	2,87/1,65	48021191	21.1
10/02-02 B	1,50	5,01/2,88	48021192	31.1
10/03-03 B	2,20	7,12/4,09	48021193	34.1
10/04-04 B	3,00	9,57/5,51	48021194	42.5
10/05-05 B	4,00	12,80/7,34	48021195	43.2
10/06-06 B	4,00	12,80/7,34	48021196	47.2
10/07-07 B	5,50	17,10/9,86	48021197	73.7
10/08-08 B	5,50	17,10/9,86	48021198	74.4
10/09-09 B	7,50	22,90/13,20	48021199	80.6
10/10-10 B	7,50	22,90/13,20	48021200	81.3
10/11-11 B	7,50	22,90/13,20	48021201	81.9
10/13-13 B	11,00	33,20/19,10	48021202	134
10/15-15 B	11,00	33,20/19,10	48021203	135.3
10/15-17 B	11,00	33,20/19,10	48021204	136.1
10/15-19 B	11,00	33,20/19,10	48021205	136.9
10/15-21 B	11,00	33,20/19,10	48021206	137.7
15/01-02 C	2,20	7,10/4,10	05272017	34.9
15/02-02 C	4,00	12,50/7,20	05272018	50.9
15/03-03 C	5,50	17,0/9,80	05272020	82.7
15/04-04 C	7,50	22,50/13,0	05272022	84.1
15/05-05 C	11,00	32,90/19,0	05272024	154.8
15/06-06 C	11,00	32,90/19,0	05272026	156.2
15/07-07 C	15,00	44,30/25,60	05272028	168.1
15/08-08 C	15,00	44,30/25,60	05272030	170.4
15/09-09 C	15,00	44,30/25,60	05272032	171
15/10-10 C	18,50	54,60/31,50	05272034	182.3
15/11-11 C	18,50	54,60/31,50	05272036	183.7

Selection chart

Movitec VCI, n = 2900 rpm

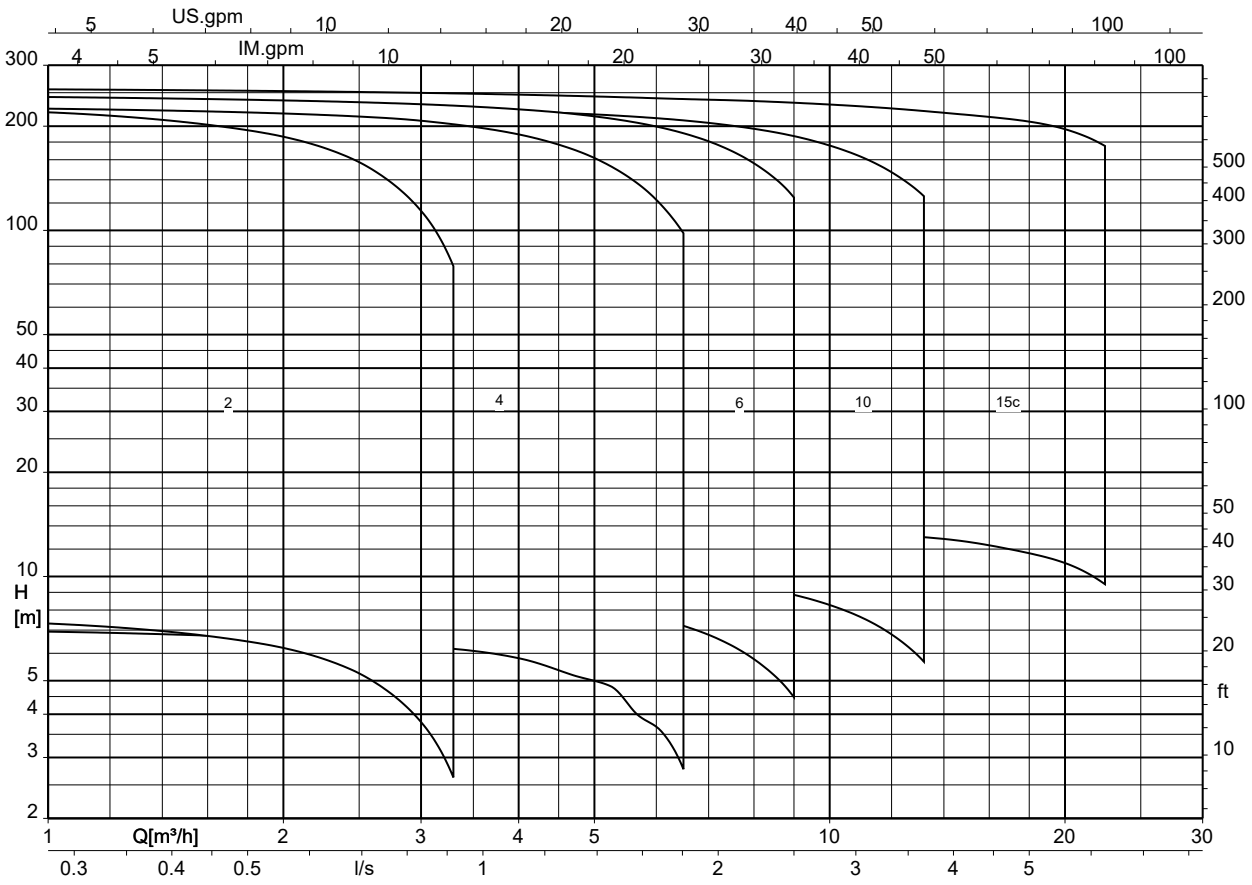

Movitec VCI, n = 3500 rpm

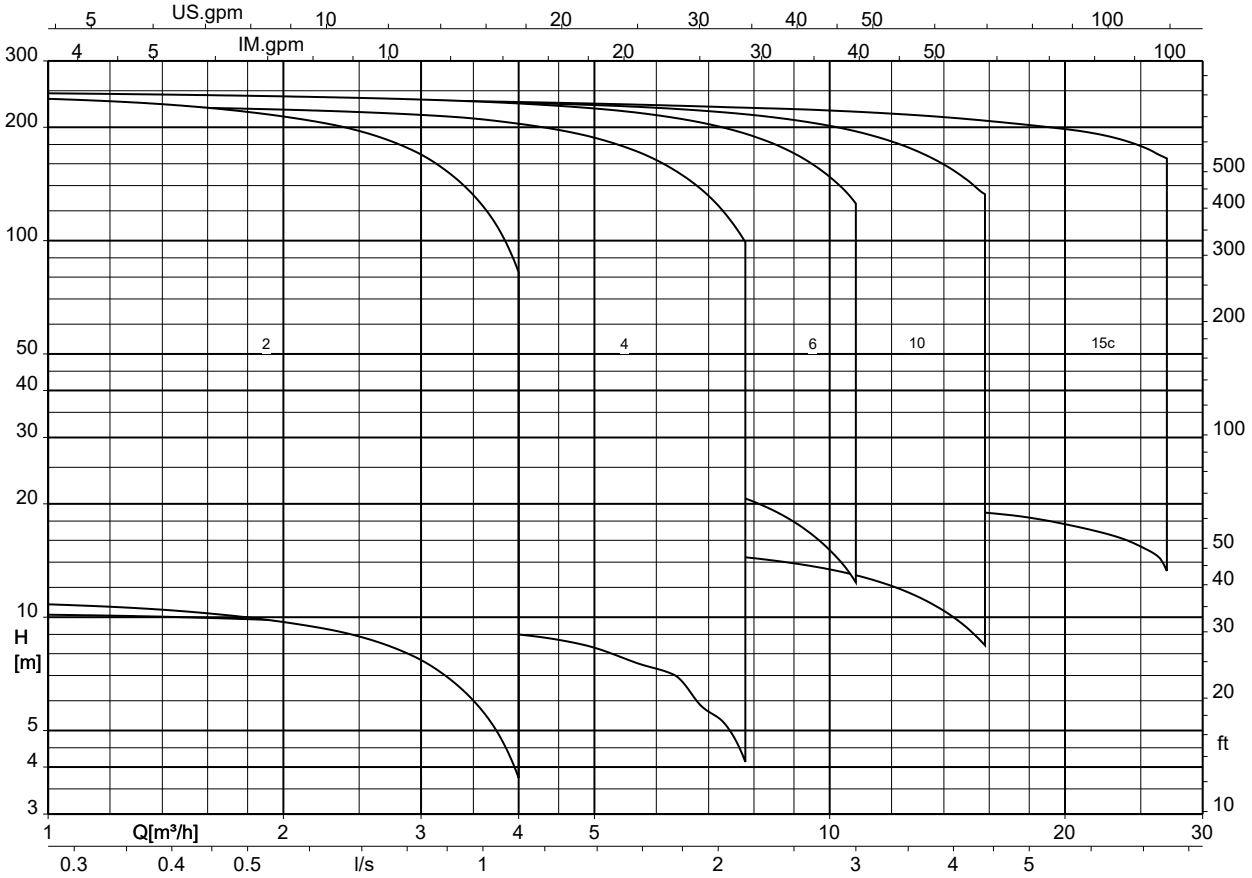

Characteristic curves

n = 2900 rpm

Movitec VCI 2B, n = 2900 rpm

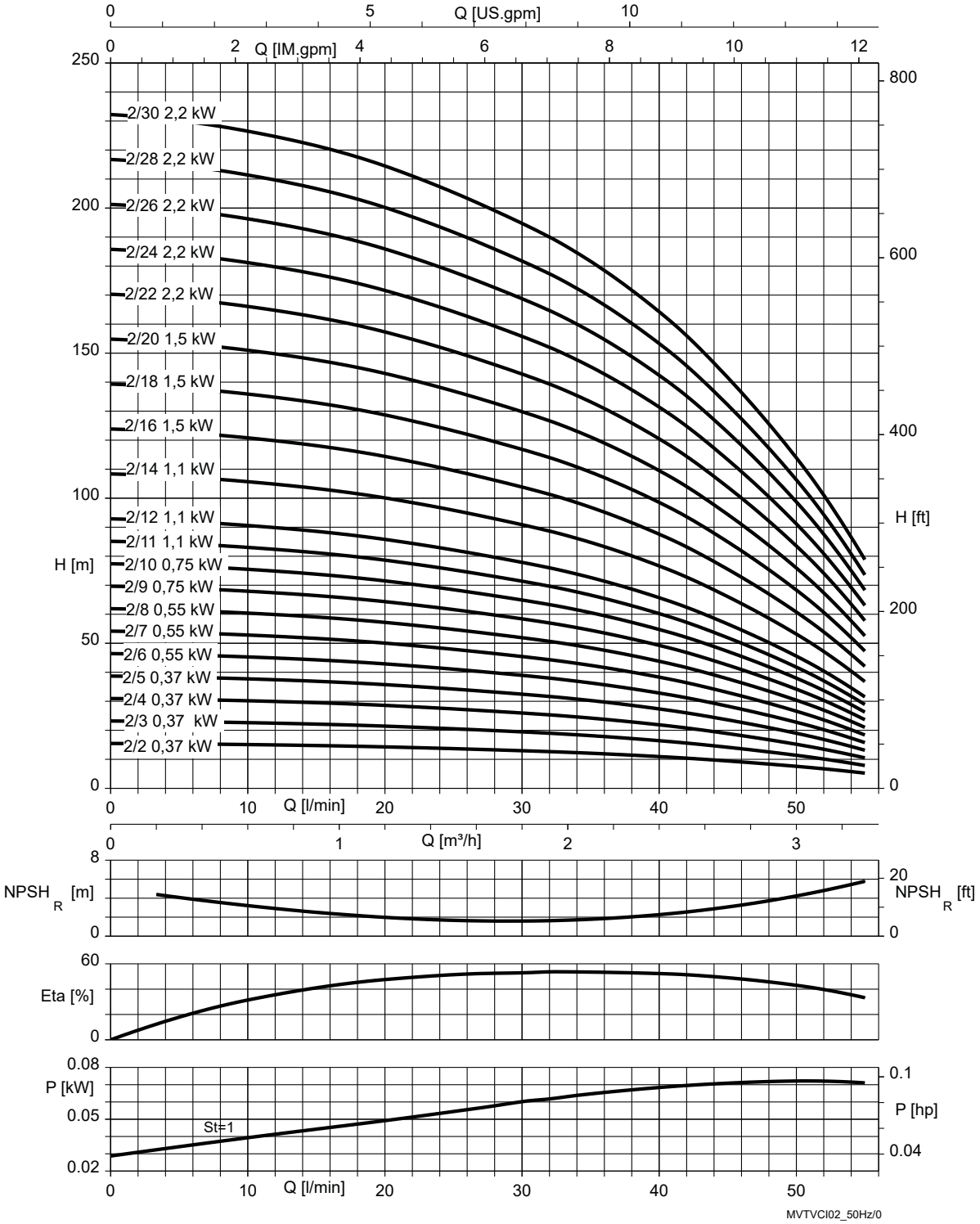

Fig. 4: ρ = 1000 kg/m³

St = 1	P per stage

1798.54/10-EN

Movitec VCI 4B, n = 2900 rpm

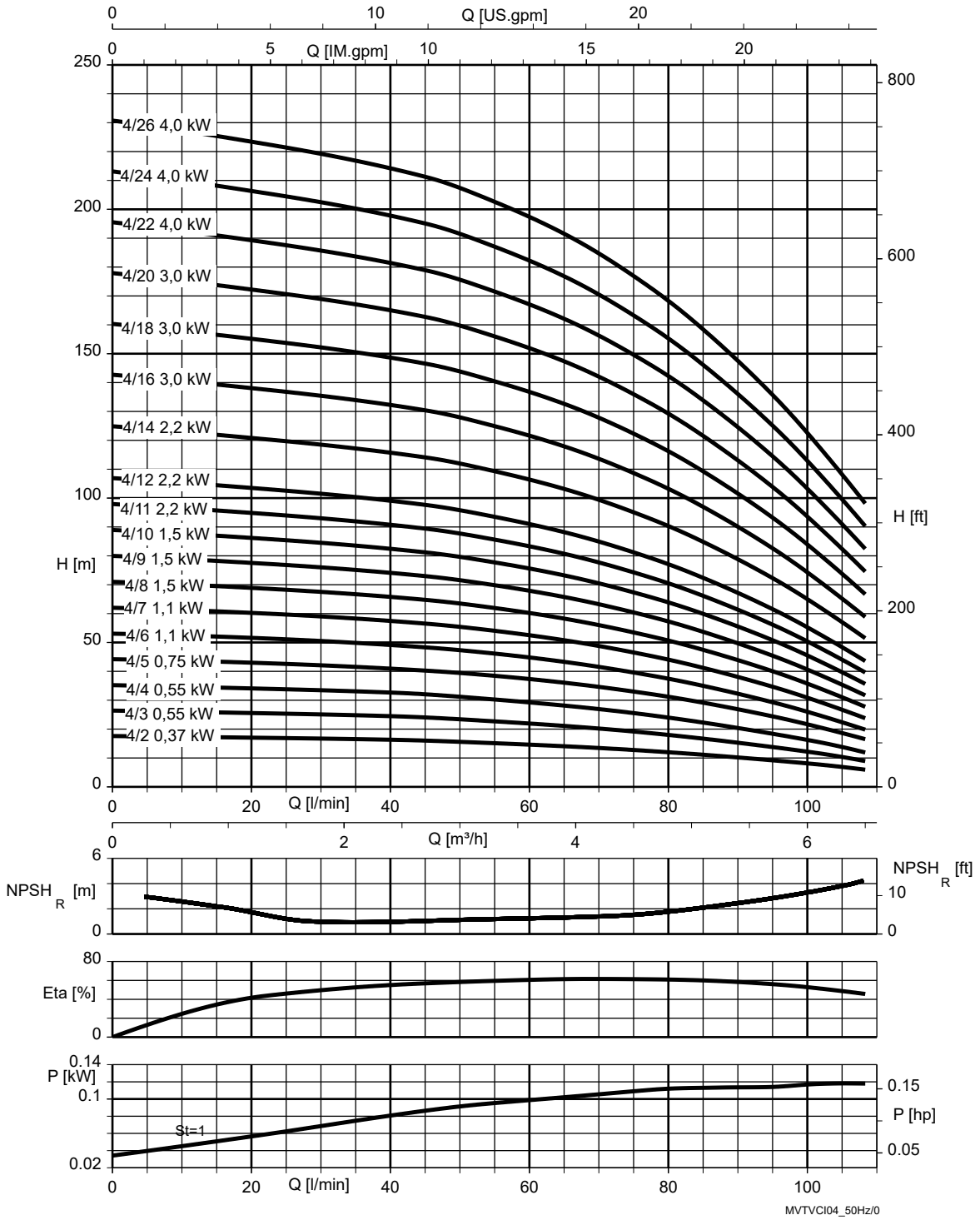

Fig. 5: ρ = 1000 kg/m³

St = 1	P per stage

1798.54/10-EN

Movitec VCI 6B, n = 2900 rpm

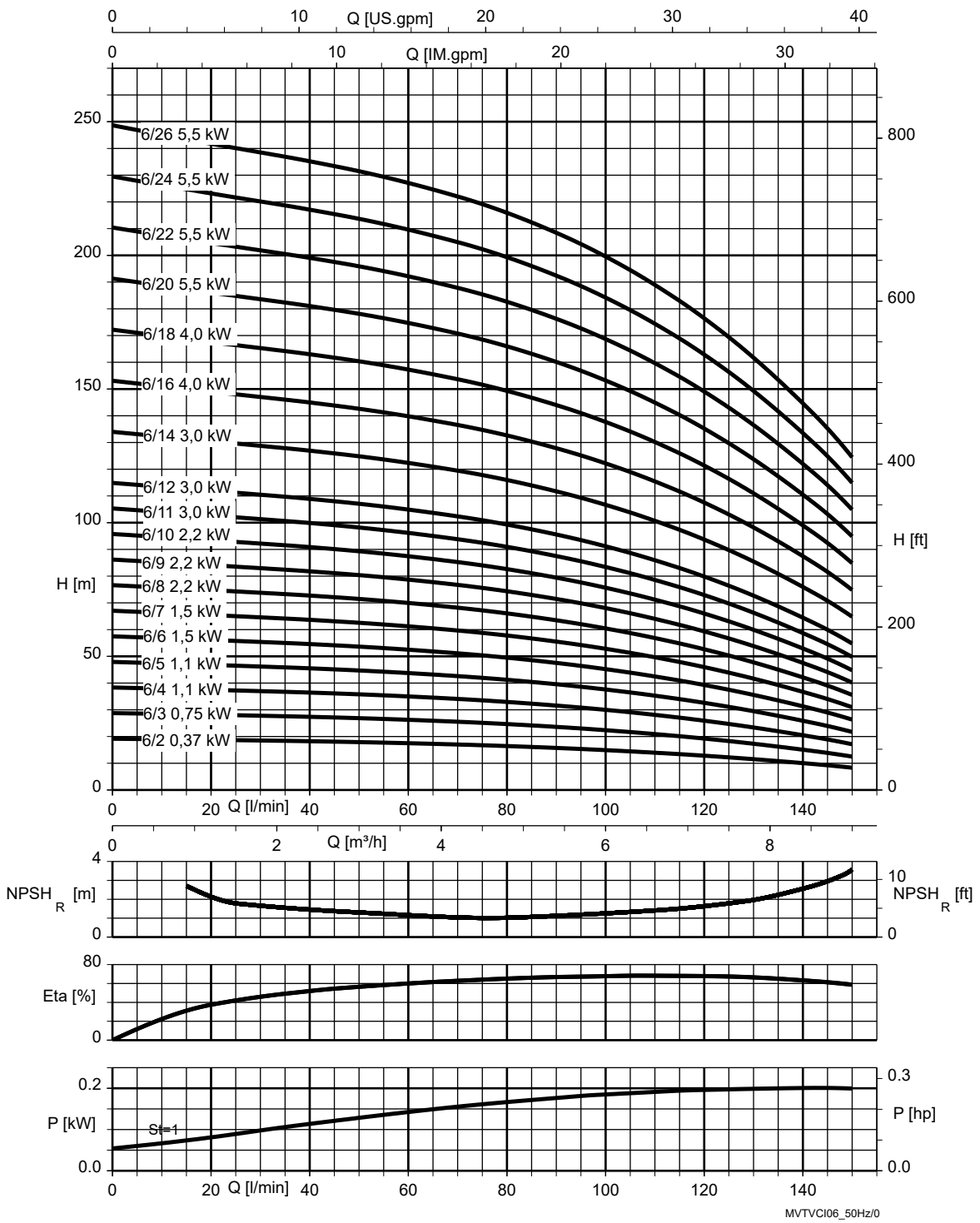

Fig. 6: ρ = 1000 kg/m³

St = 1	P per stage

1798.54/10-EN

Movitec VCI 10B, n = 2900 rpm

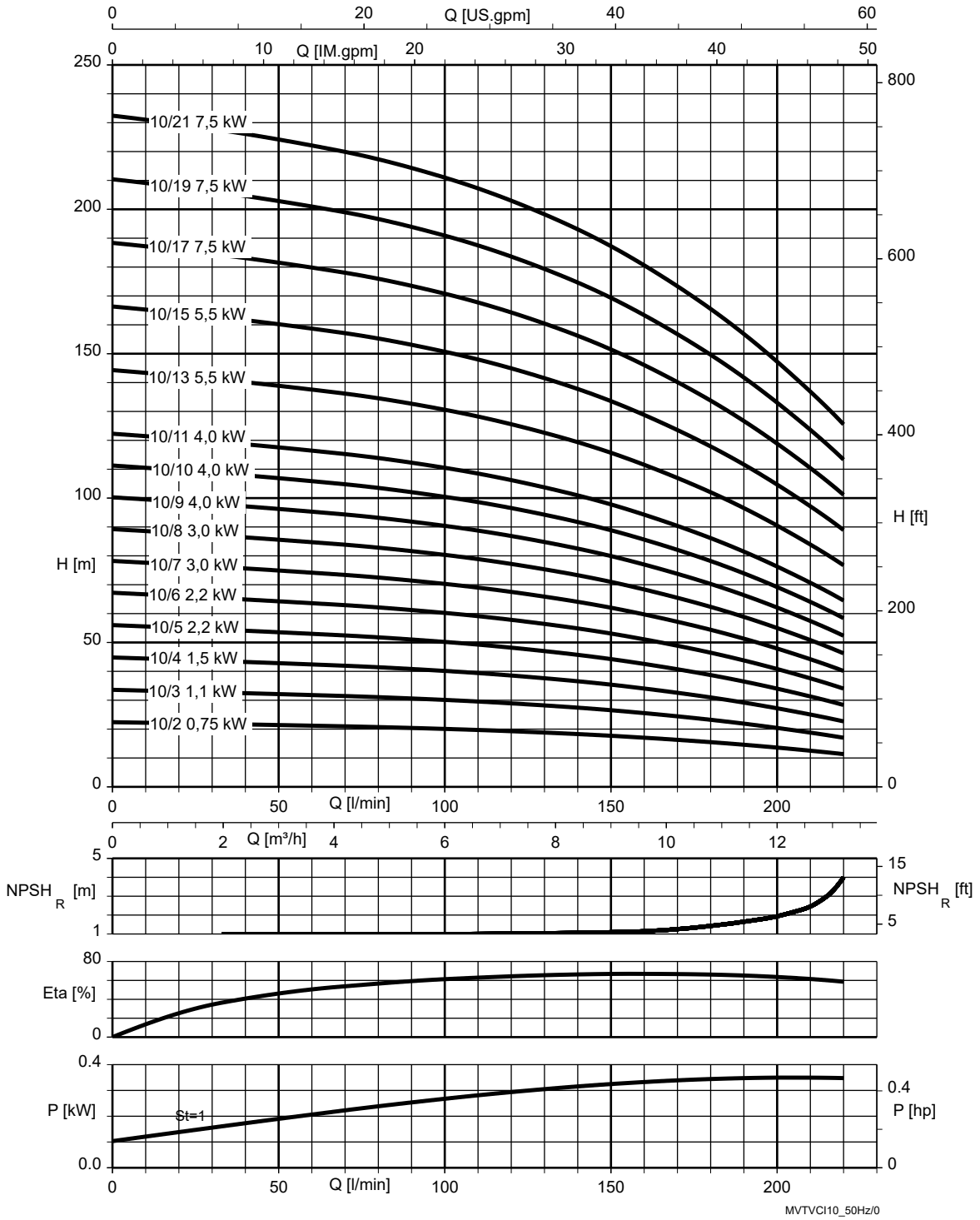

Fig. 7: ρ = 1000 kg/m³

St = 1	P per stage

1798.54/10-EN

Movitec VCI 15C, n = 2900 rpm

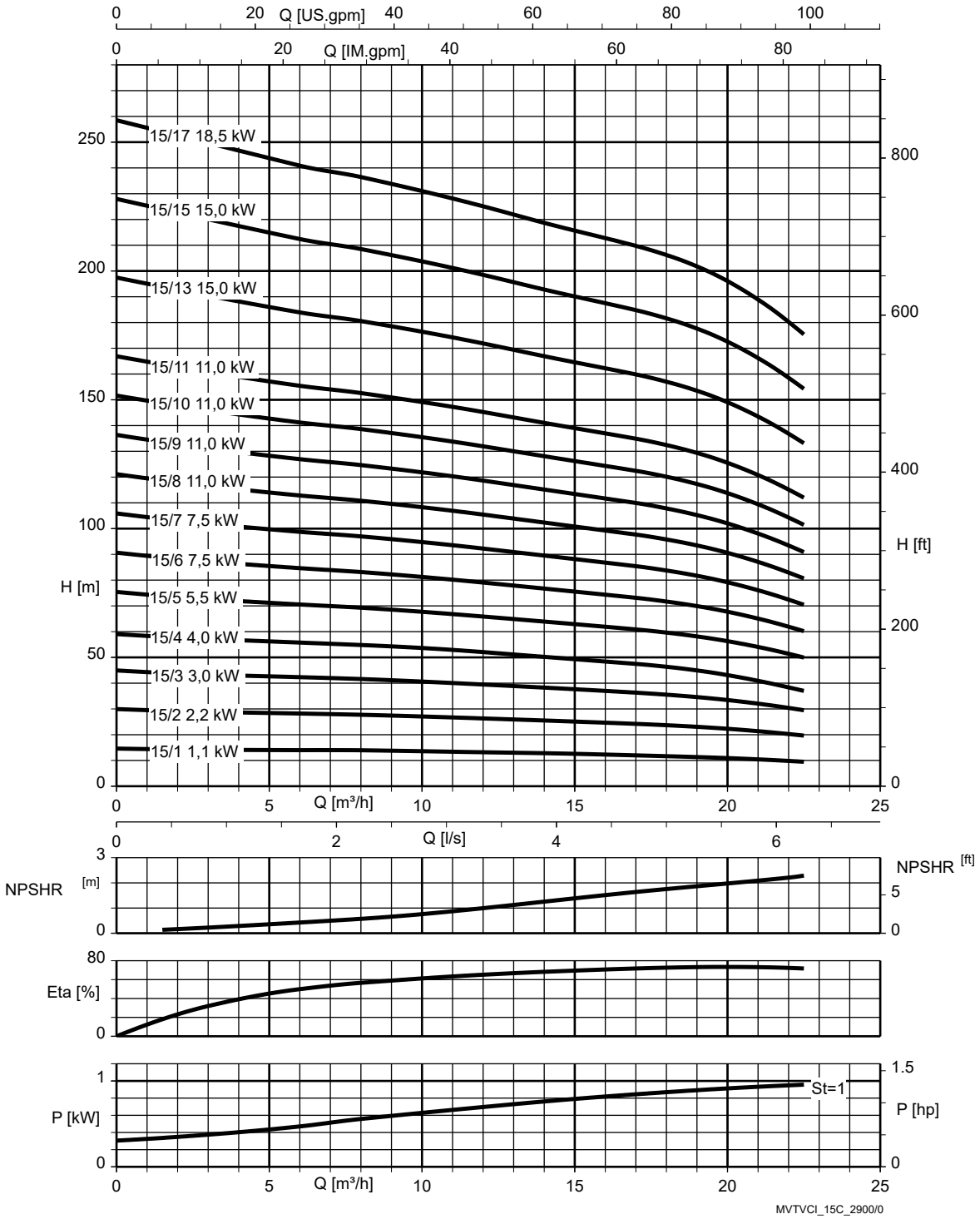

Fig. 8: ρ = 1000 kg/m³

St = 1	P per stage

1798.54/10-EN

n = 3500 rpm

Movitec VCI 2B, n = 3500 rpm

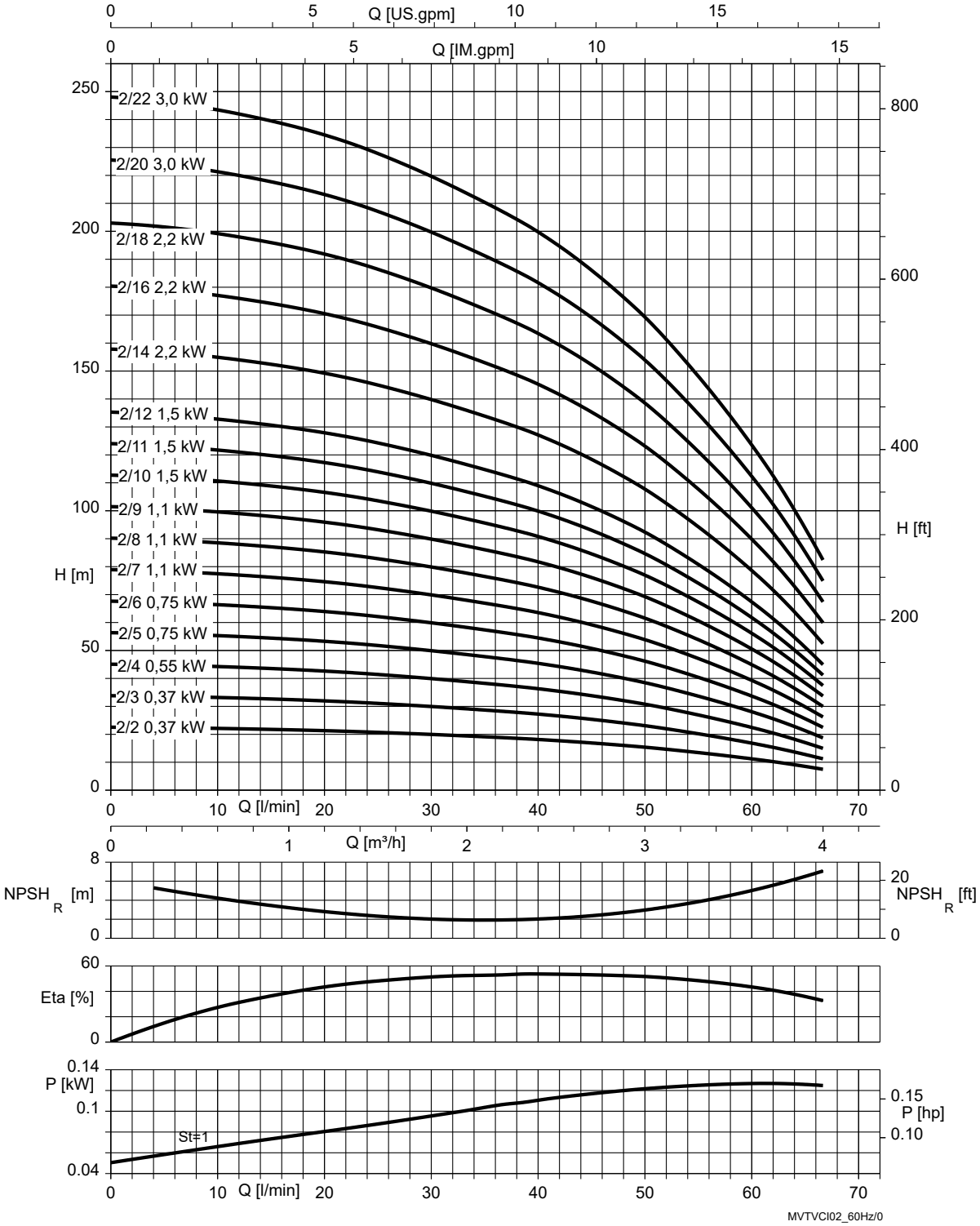

Fig. 9: ρ = 1000 kg/m³

St = 1	P per stage

1798.54/10-EN

Movitec VCI 4B, n = 3500 rpm

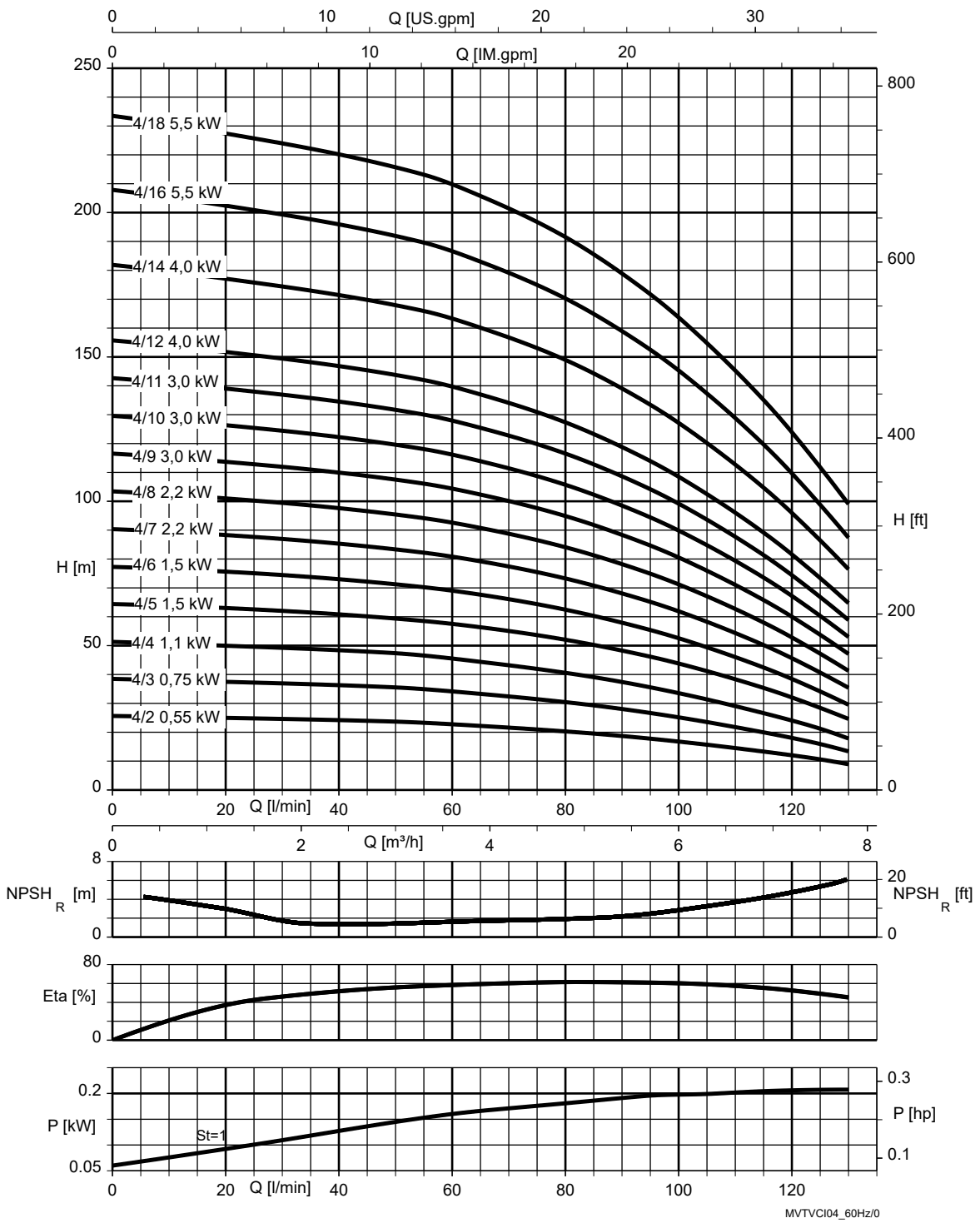

Fig. 10: ρ = 1000 kg/m³

St = 1	P per stage

1798.54/10-EN

Movitec VCI 6B, n = 3500 rpm

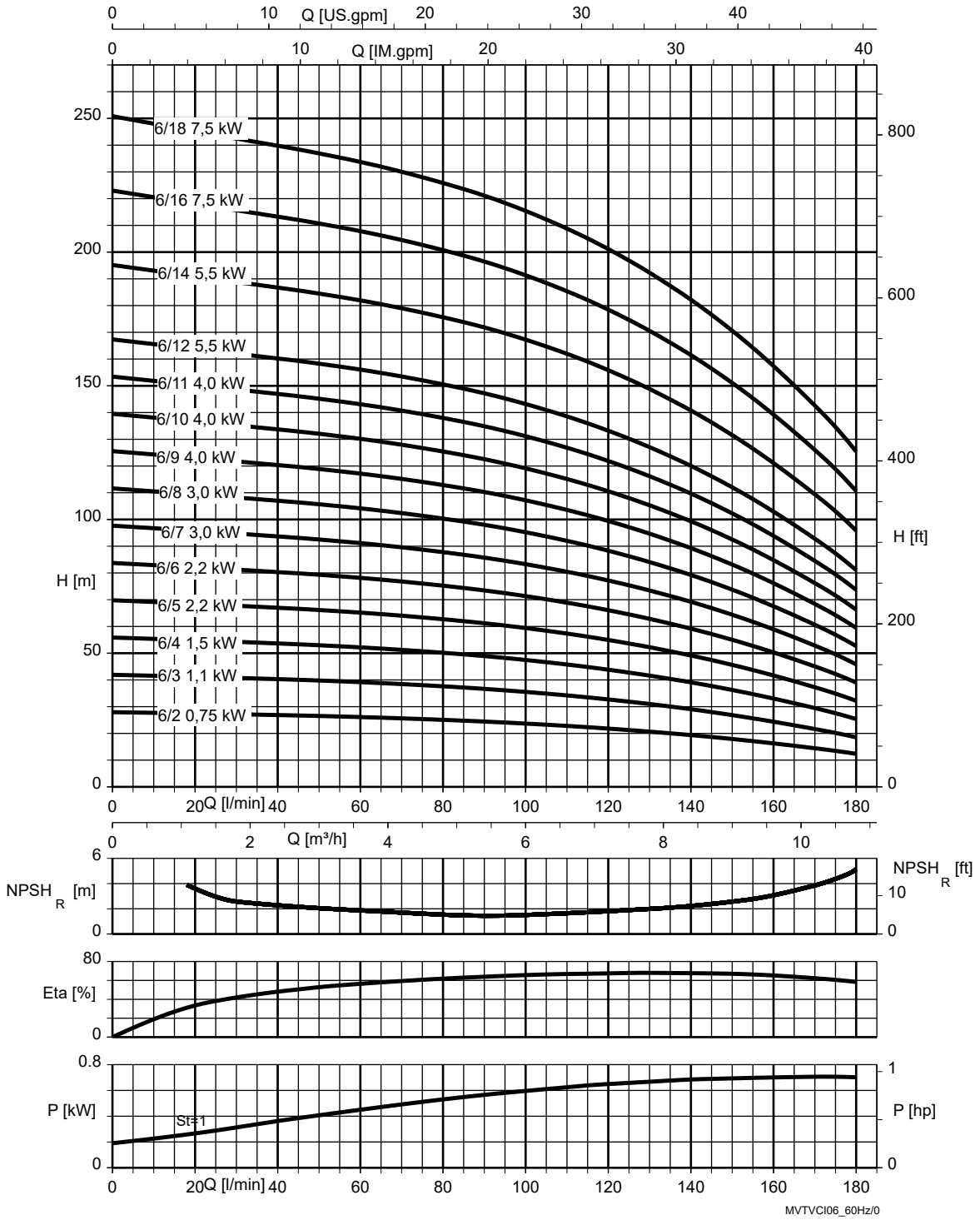

Fig. 11: ρ = 1000 kg/m³

St = 1	P per stage

1798.54/10-EN

Movitec VCI 10B, n = 3500 rpm

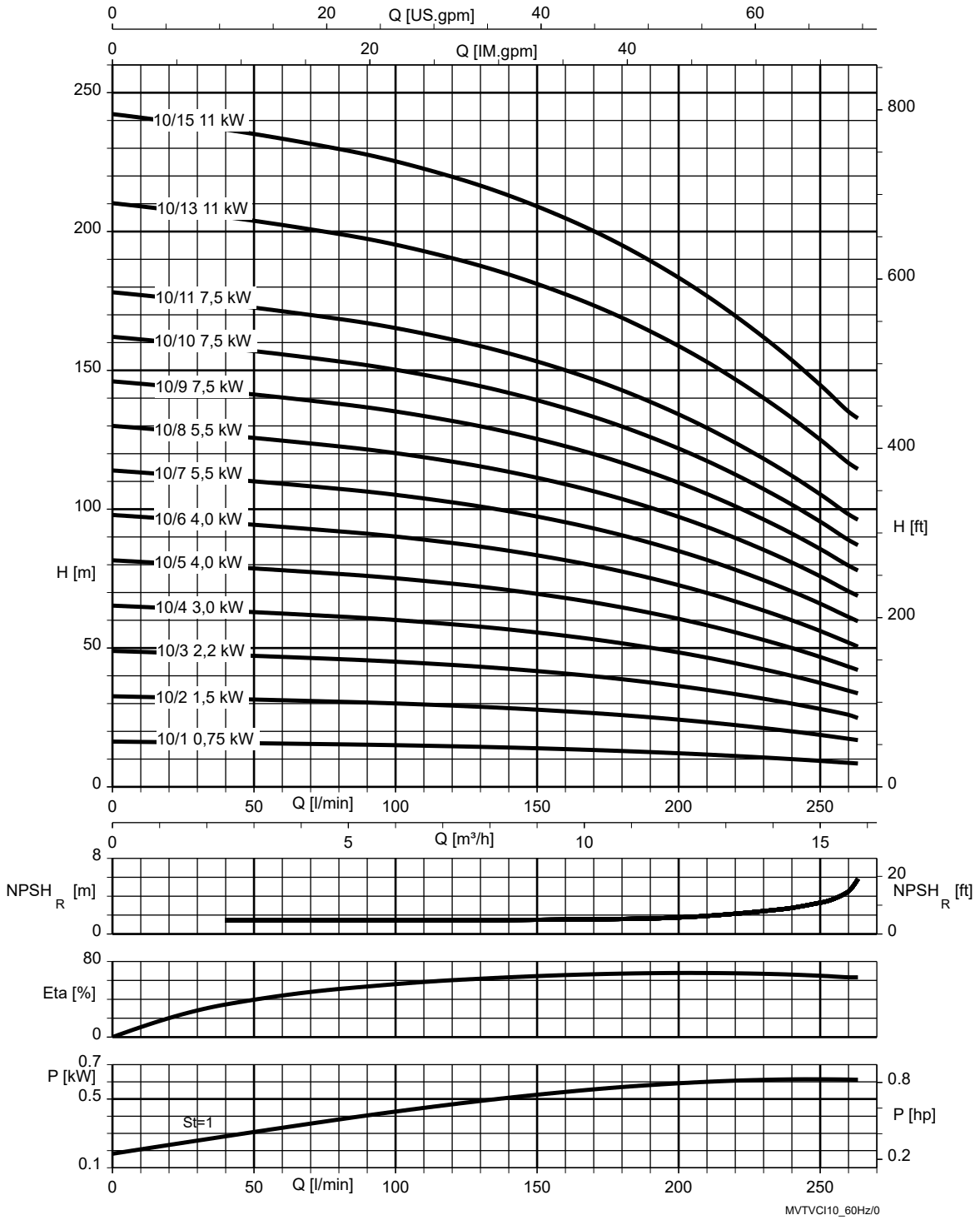

Fig. 12: ρ = 1000 kg/m³

St = 1	P per stage

1798.54/10-EN

Movitec VCI 15C, n = 3500 rpm

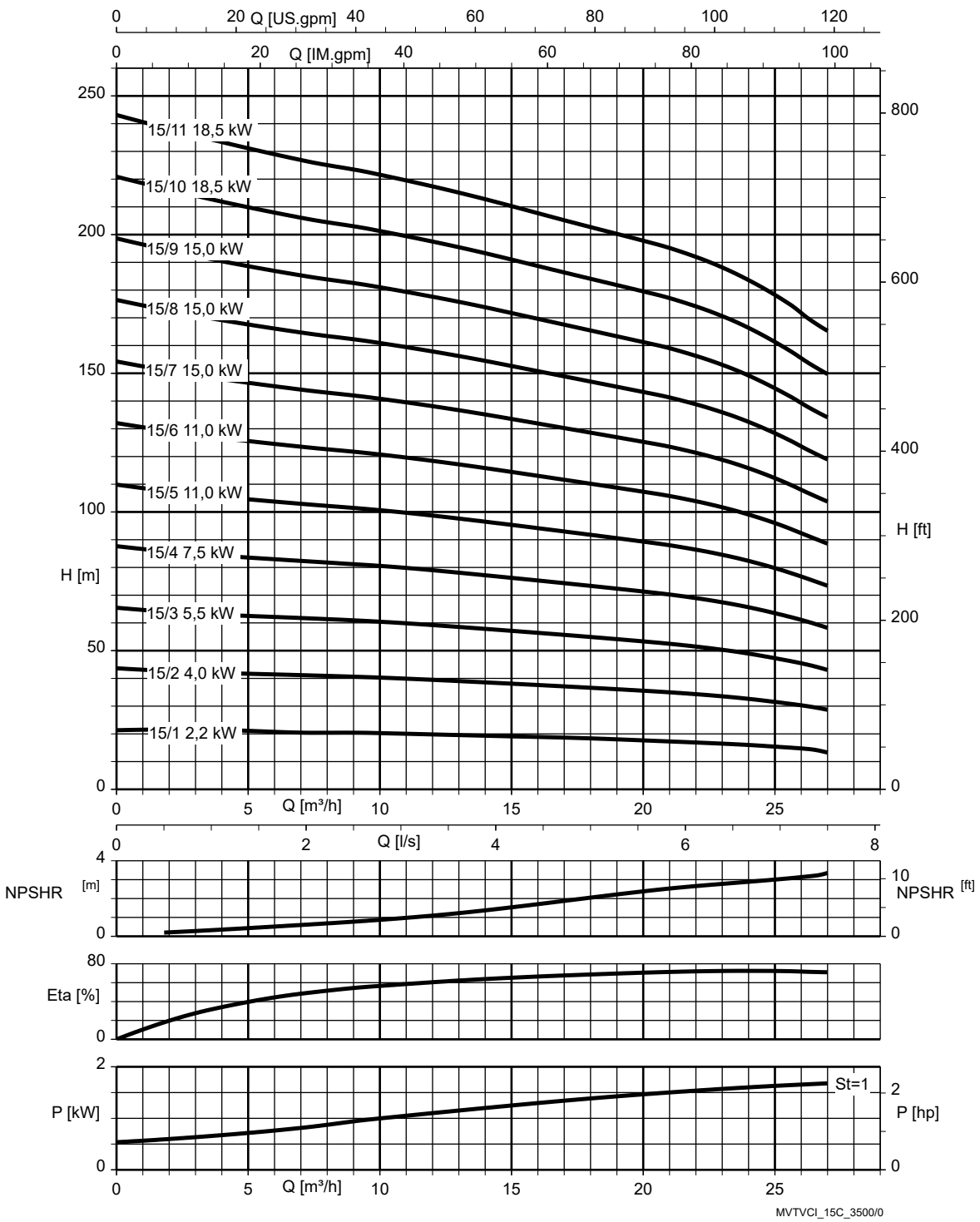

Fig. 13: ρ = 1000 kg/m³

St = 1	P per stage

1798.54/10-EN

Dimensions and connections

Movitec VCI 2B, n = 2900 rpm

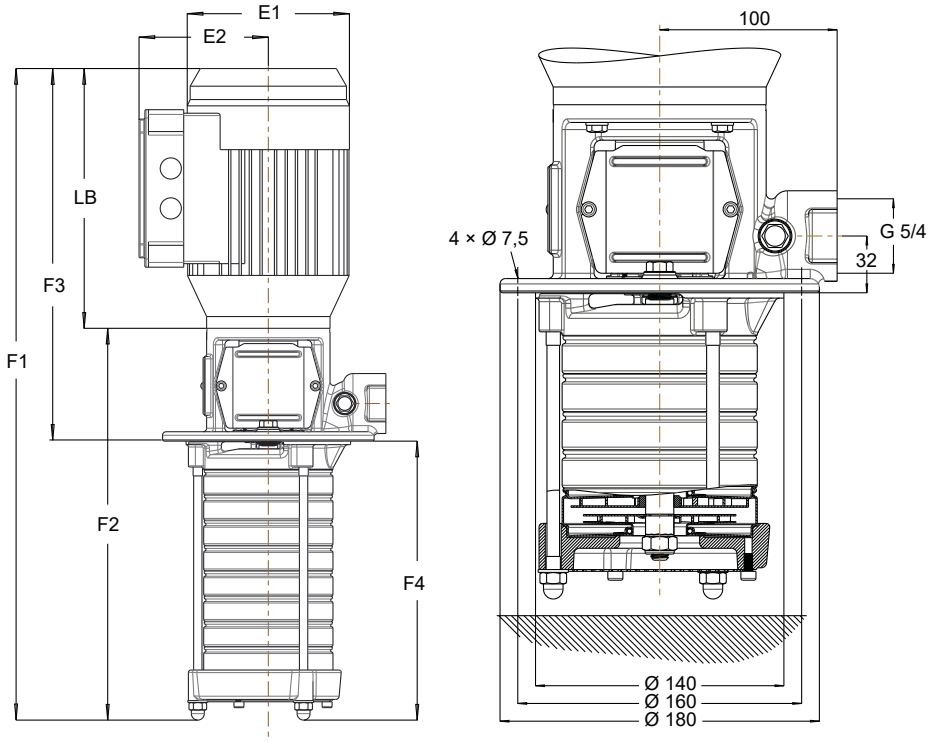

Fig. 14: Movitec VCI 2B dimensions / connections

Table 16: Calculation of pump (set) length

Feature	Pump length	Pump set length
Pump without blind stage	F1	F2
Pump with blind stage	F3 + F4	F3 + F4 - LB

- F3 [mm]: depends on number of impellers
- F4 [mm]: depends on the number of stages (incl. blind stages)

Example: size 2/16-22: F3 = 373 mm, F4 = 560 mm

Table 17: Dimensions

Size	E1	E2	LB	F1	F2	F3	F4
	[mm]	[mm]	[mm]	[mm]	[mm]	[mm]	[mm]
02/02-02 B	138	109	221	447	226	317	130
02/03-03 B	138	109	221	468	247	317	151
02/04-04 B	138	109	221	490	269	317	173
02/05-05 B	138	109	221	511	290	317	194
02/06-06 B	138	109	221	533	312	317	216
02/07-07 B	138	109	221	554	333	317	237
02/08-08 B	138	109	221	576	355	317	259
02/09-09 B	157	133	257	643	386	363	280
02/10-10 B	157	133	257	665	408	363	302
02/11-11 B	157	133	257	686	429	363	323
02/12-12 B	157	133	257	708	451	363	345
02/14-14 B	157	133	257	751	494	363	388
02/16-16 B	180	145	257	804	547	373	431
02/18-18 B	180	145	257	847	590	373	474
02/20-20 B	180	145	257	890	633	373	517
02/22-22 B	180	145	310	986	676	426	560
02/24-24 B	180	145	310	1029	719	426	603

1798.54/10-EN

Size	E1	E2	LB	F1	F2	F3	F4
	[mm]	[mm]	[mm]	[mm]	[mm]	[mm]	[mm]
02/26-26 B	180	145	310	1072	762	426	646
02/28-28 B	180	145	310	1115	805	426	689
02/30-30 B	180	145	310	1158	848	426	732

Movitec VCI 2B, n = 3500 rpm

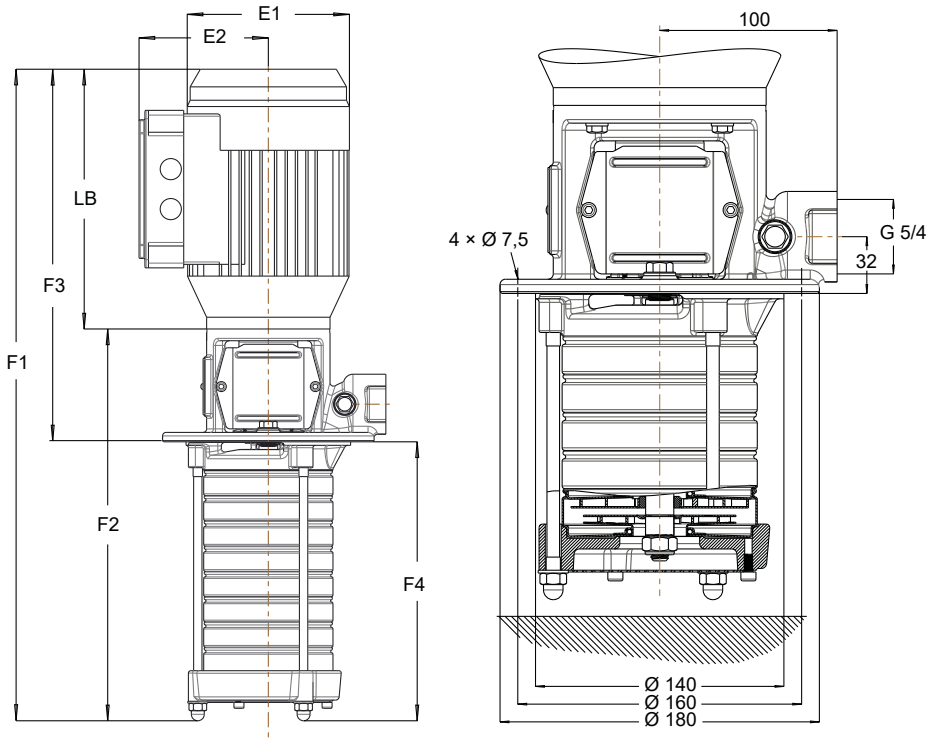

Fig. 15: Dimensions / connections Movitec VCI 2B

Table 18: Calculation of pump (set) length

Feature	Pump length	Pump set length
Pump without blind stage	F1	F2
Pump with blind stage	F3 + F4	F3 + F4 - LB

- F3 [mm]: depends on number of impellers
- F4 [mm]: depends on the number of stages (incl. blind stages)

Example: Sizes 2/16-22: F3 = 426 mm, F4 = 560 mm

Table 19: Dimensions

Size	E1	E2	LB	F1	F2	F3	F4
	[mm]	[mm]	[mm]	[mm]	[mm]	[mm]	[mm]
02/02-02 B	138	109	221	447	226	317	130
02/03-03 B	138	109	221	468	247	317	151
02/04-04 B	138	109	221	490	269	317	173
02/05-05 B	157	133	257	557	300	363	194
02/06-06 B	157	133	257	579	322	363	216
02/07-07 B	157	133	257	600	343	363	237
02/08-08 B	157	133	257	622	365	363	259
02/09-09 B	180	145	257	643	386	363	280
02/10-10 B	180	145	257	675	418	373	302
02/11-11 B	180	145	257	696	439	373	323
02/12-12 B	180	145	257	718	461	373	345
02/14-14 B	180	145	310	814	504	426	388
02/16-16 B	180	145	310	857	547	426	431
02/18-18 B	180	145	310	900	590	426	474
02/20-20 B	200	155	318	961	643	444	517
02/22-22 B	200	155	318	1004	686	444	560
02/22-24 B	200	155	318	1047	729	444	603
02/22-26 B	200	155	318	1090	772	444	646
02/22-28 B	200	155	318	1133	815	444	689
02/22-30 B	200	155	318	1176	856	444	732

1798.54/10-EN

Movitec VCI 4B, n = 2900 rpm

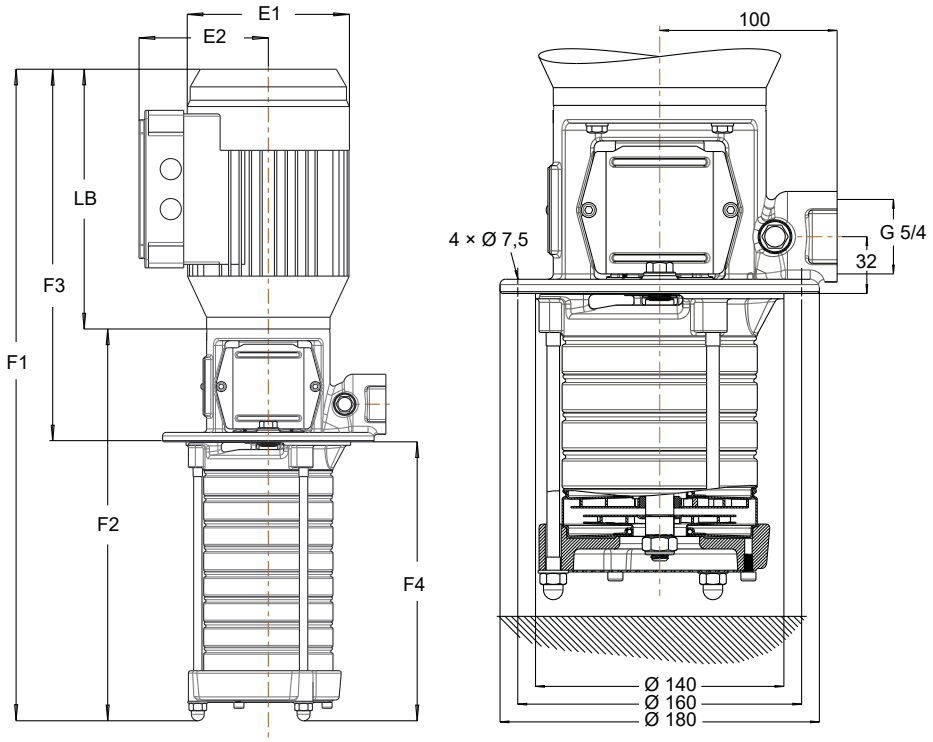

Fig. 16: Movitec VCI 4B dimensions / connections

Table 20: Calculation of pump (set) length

Feature	Pump length	Pump set length
Pump without blind stage	F1	F2
Pump with blind stage	F3 + F4	F3 + F4 - LB

- F3 [mm]: depends on number of impellers
- F4 [mm]: depends on the number of stages (incl. blind stages)

Example: size 4/16-22: F3 = 444 mm, F4 = 560 mm

Table 21: Dimensions

Size	E1	E2	LB	F1	F2	F3	F4
	[mm]	[mm]	[mm]	[mm]	[mm]	[mm]	[mm]
04/02-02 B	138	109	221	447	226	317	130
04/03-03 B	138	109	221	468	247	317	151
04/04-04 B	138	109	221	490	269	317	173
04/05-05 B	157	133	257	557	300	363	194
04/06-06 B	157	133	257	579	322	363	216
04/07-07 B	157	133	257	600	343	363	237
04/08-08 B	180	145	257	632	375	373	259
04/09-09 B	180	145	257	653	396	373	280
04/10-10 B	180	145	257	675	418	373	302
04/11-11 B	180	145	310	749	439	426	323
04/12-12 B	180	145	310	771	461	426	345
04/14-14 B	180	145	310	814	504	426	388
04/16-16 B	200	155	318	875	557	444	431
04/18-18 B	200	155	318	918	600	444	474
04/20-20 B	200	155	318	961	643	444	517
04/22-22 B	223	166	325	1011	686	451	560
04/24-24 B	223	166	325	1054	729	451	603
04/26-26 B	223	166	325	1097	772	451	646
04/26-28 B	223	166	325	1140	815	451	689
04/26-30 B	223	166	325	1183	858	451	732

Movitec VCI 4B, n = 3500 rpm

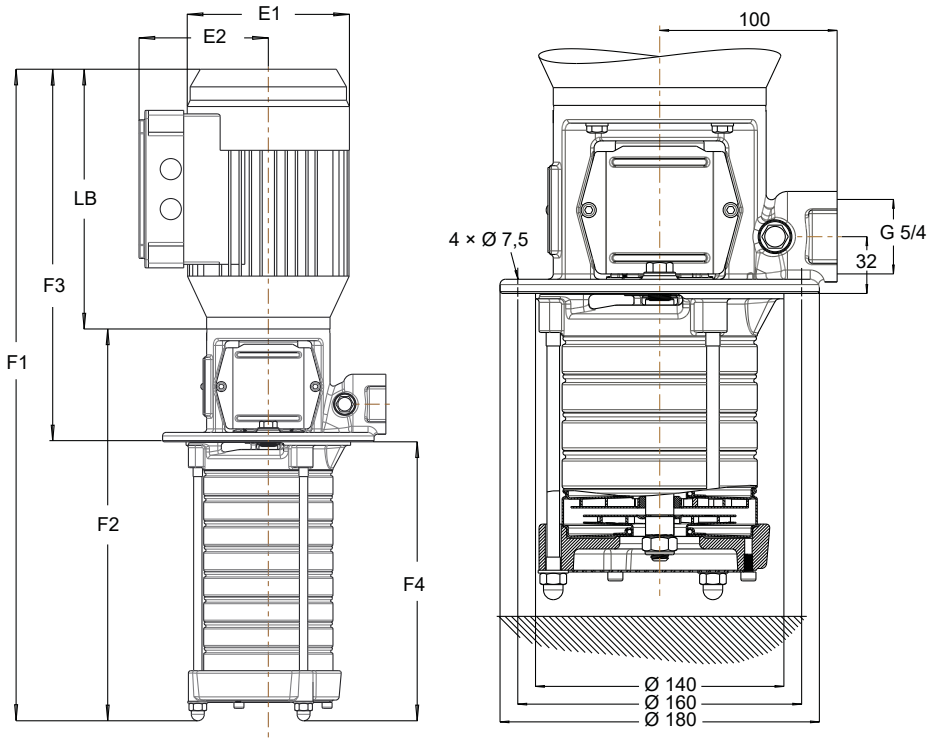

Fig. 17: Dimensions / connections Movitec VCI 4B

Table 22: Calculation of pump (set) length

Feature	Pump length	Pump set length
Pump without blind stage	F1	F2
Pump with blind stage	F3 + F4	F3 + F4 - LB

- F3 [mm]: depends on number of impellers
- F4 [mm]: depends on the number of stages (incl. blind stages)

Example: Sizes 4/16-22: F3 = 552 mm, F4 = 560 mm

Table 23: Dimensions

Size	E1	E2	LB	F1	F2	F3	F4
	[mm]	[mm]	[mm]	[mm]	[mm]	[mm]	[mm]
04/02-02 B	138	109	221	447	226	317	130
04/03-03 B	157	133	257	514	257	363	151
04/04-04 B	157	133	257	536	279	363	173
04/05-05 B	180	145	257	567	310	373	194
04/06-06 B	180	145	257	589	332	373	216
04/07-07 B	180	145	310	663	353	426	237
04/08-08 B	180	145	310	685	375	426	259
04/09-09 B	200	155	318	724	406	444	280
04/10-10 B	200	155	318	746	428	444	302
04/11-11 B	200	155	318	767	449	444	323
04/12-12 B	223	166	325	796	471	451	345
04/14-14 B	223	166	325	839	514	451	388
04/16-16 B	260	190	350	983	633	552	431
04/18-18 B	260	190	350	1026	676	552	474
04/18-20 B	260	190	350	1069	719	552	517
04/18-22 B	260	190	350	1112	762	552	560
04/18-24 B	260	190	350	1155	805	552	603
04/18-26 B	260	190	350	1198	848	552	646
04/18-28 B	260	190	350	1241	891	552	689
04/18-30 B	260	190	350	1284	934	552	732

Movitec VCI 6B, n = 2900 rpm

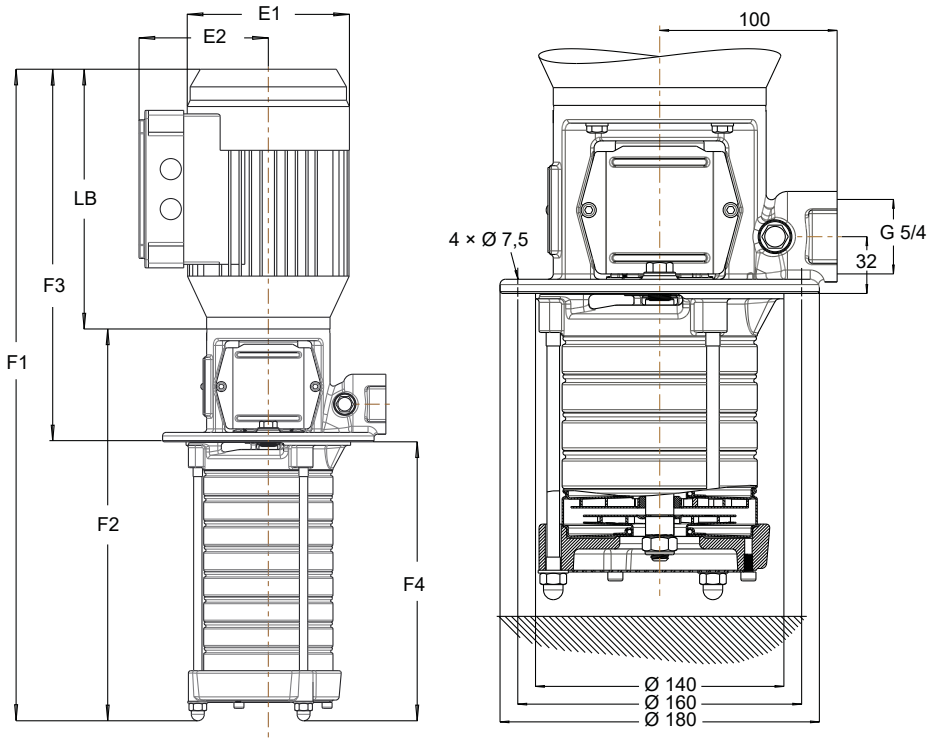

Fig. 18: Movitec VCI 6B dimensions / connections

Table 24: Calculation of pump (set) length

Feature	Pump length	Pump set length
Pump without blind stage	F1	F2
Pump with blind stage	F3 + F4	F3 + F4 - LB

- F3 [mm]: depends on number of impellers
- F4 [mm]: depends on the number of stages (incl. blind stages)

Example: size 6/16-22: F3 = 451 mm, F4 = 640 mm

Table 25: Dimensions

Size	E1	E2	LB	F1	F2	F3	F4
	[mm]	[mm]	[mm]	[mm]	[mm]	[mm]	[mm]
06/02-02 B	138	109	221	457	236	317	140
06/03-03 B	157	133	257	528	271	363	165
06/04-04 B	157	133	257	553	296	363	190
06/05-05 B	157	133	257	578	321	363	215
06/06-06 B	180	145	257	613	356	373	240
06/07-07 B	180	145	257	638	381	373	265
06/08-08 B	180	145	310	716	406	426	290
06/09-09 B	180	145	310	741	431	426	315
06/10-10 B	180	145	310	766	456	426	340
06/11-11 B	200	155	318	809	491	444	365
06/12-12 B	200	155	318	834	516	444	390
06/14-14 B	200	155	318	884	566	444	440
06/16-16 B	223	166	325	941	616	451	490
06/18-18 B	223	166	325	991	666	451	540
06/20-20 B	260	190	350	1142	792	552	590
06/22-22 B	260	190	350	1192	842	552	640
06/24-24 B	260	190	350	1242	892	552	690
06/26-26 B	260	190	350	1292	942	552	740
06/28-28 B	260	190	350	1342	992	552	790
06/26-30 B	260	190	350	1392	1042	552	840

Movitec VCI 6B, n = 3500 rpm

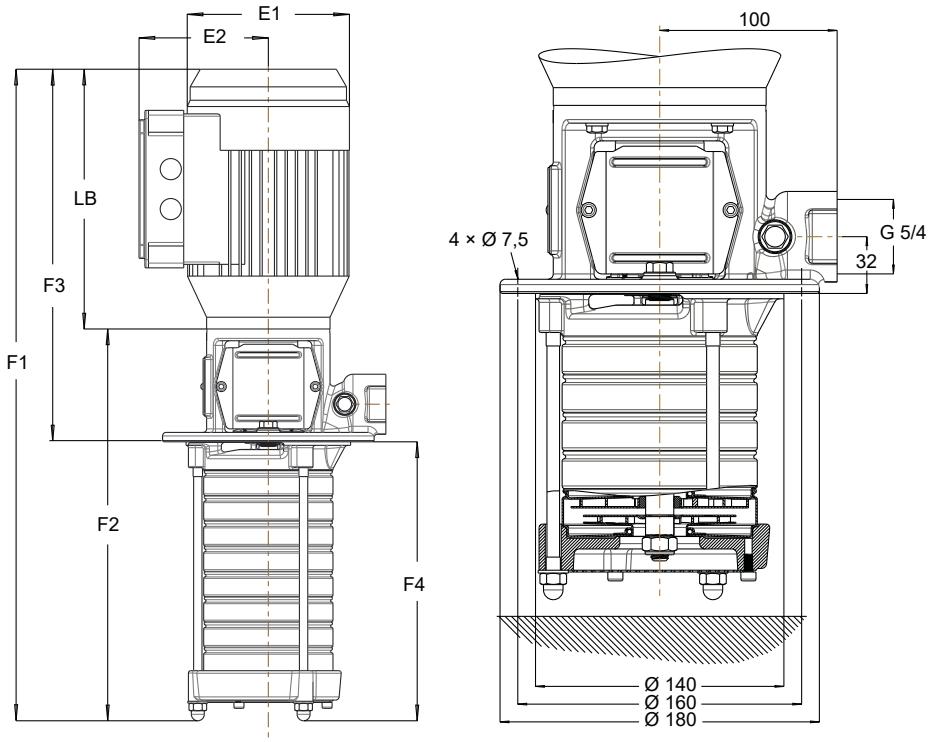

Fig. 19: Dimensions / connections Movitec VCI 6B

Table 26: Calculation of pump (set) length

Feature	Pump length	Pump set length
Pump without blind stage	F1	F2
Pump with blind stage	F3 + F4	F3 + F4 - LB

- F3 [mm]: depends on number of impellers
- F4 [mm]: depends on the number of stages (incl. blind stages)

Example: Sizes 6/16-22: F3 = 589 mm, F4 = 640 mm

Table 27: Dimensions

Size	E1	E2	LB	F1	F2	F3	F4
	[mm]	[mm]	[mm]	[mm]	[mm]	[mm]	[mm]
06/02-02 B	157	133	257	503	246	363	140
06/03-03 B	157	133	257	528	271	363	165
06/04-04 B	180	145	257	563	306	373	190
06/05-05 B	180	145	310	641	331	426	215
06/06-06 B	180	145	310	666	356	426	240
06/07-07 B	200	155	318	709	391	444	265
06/08-08 B	200	155	318	734	416	444	290
06/09-09 B	223	166	325	766	441	451	315
06/10-10 B	223	166	325	791	466	451	340
06/11-11 B	223	166	325	816	491	451	365
06/12-12 B	260	190	350	942	592	552	390
06/14-14 B	260	190	350	992	642	552	440
06/16-16 B	260	190	387	1079	692	589	490
06/18-18 B	260	190	387	1129	742	589	540
06/18-20 B	260	190	387	1179	792	589	590
06/18-22 B	260	190	387	1229	842	589	640
06/18-24 B	260	190	387	1279	892	589	690
06/18-26 B	260	190	387	1329	942	589	740
06/18-28 B	260	190	387	1379	992	589	790
06/18-30 B	260	190	387	1429	1042	589	840

Movitec VCI 10B, n = 2900 rpm

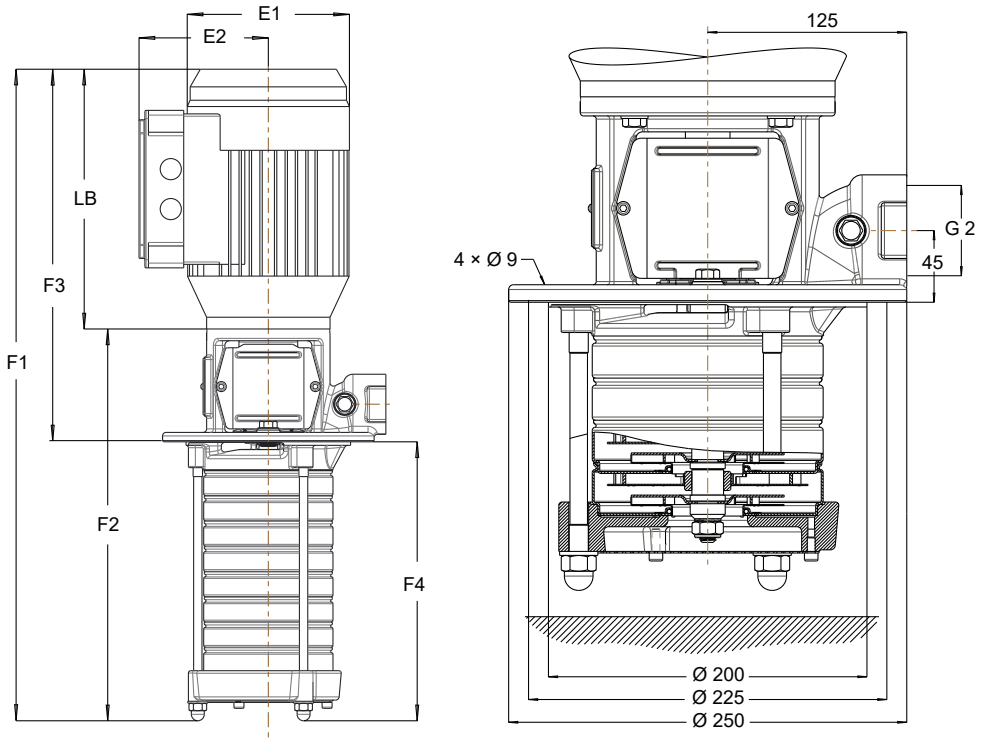

Fig. 20: Movitec VCI 10B dimensions / connections

Table 28: Calculation of pump (set) length

Feature	Pump length	Pump set length
Pump without blind stage	F1	F2
Pump with blind stage	F3 + F4	F3 + F4 - LB

- F3 [mm]: depends on number of impellers
- F4 [mm]: depends on the number of stages (incl. blind stages)

Example: size 10/15-21: F3 = 597 mm, F4 = 657 mm

Table 29: Dimensions

Size	E1	E2	LB	F1	F2	F3	F4
	[mm]	[mm]	[mm]	[mm]	[mm]	[mm]	[mm]
10/01-02 B	157	133	257	520	263	366	154
10/02-02 B	157	133	257	520	263	366	154
10/03-03 B	157	133	257	547	290	366	181
10/04-04 B	180	145	257	583	326	376	207
10/05-05 B	180	145	310	663	353	429	234
10/06-06 B	180	145	310	716	406	429	260
10/07-07 B	200	155	318	734	416	447	287
10/08-08 B	200	155	318	760	442	447	313
10/09-09 B	223	166	325	793	468	454	339
10/10-10 B	223	166	325	820	495	454	366
10/11-11 B	223	166	325	846	521	454	392
10/13-13 B	260	190	350	1005	655	560	445
10/15-15 B	260	190	350	1058	708	560	498
10/17-17 B	260	190	387	1148	761	597	551
10/19-19 B	260	190	387	1201	814	597	604
10/21-21 B	260	190	387	1254	867	597	657

Movitec VCI 10B, n = 3500 rpm

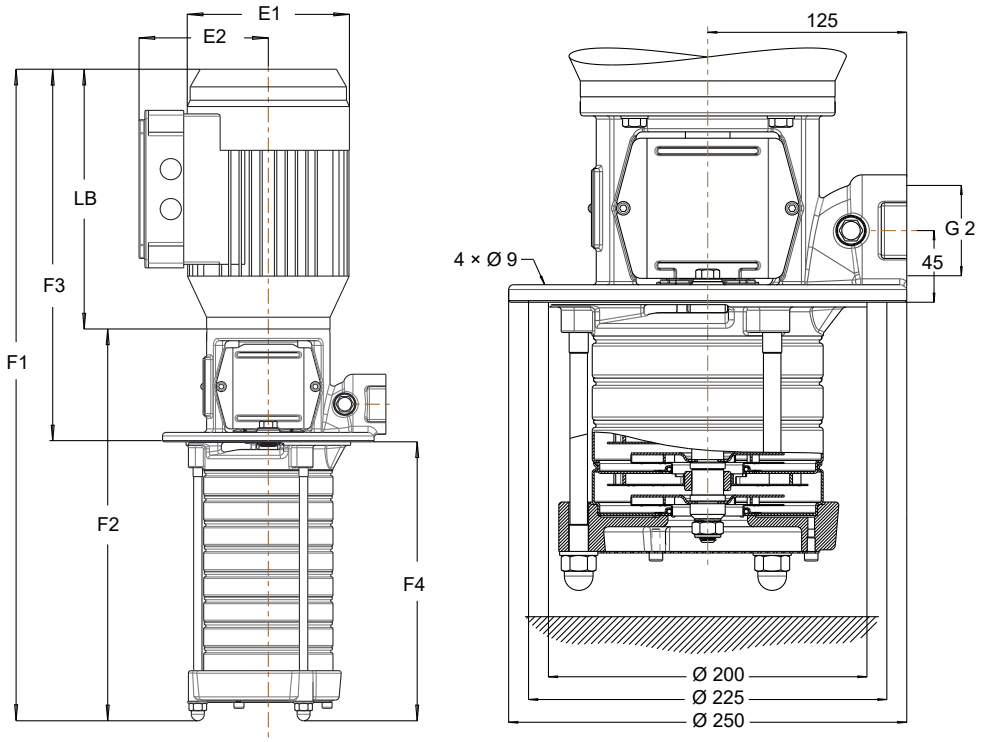

Fig. 21: Dimensions / connections Movitec VCI 10B

Table 30: Calculation of pump (set) length

Feature	Pump length	Pump set length
Pump without blind stage	F1	F2
Pump with blind stage	F3 + F4	F3 + F4 - LB

- F3 [mm]: depends on number of impellers
- F4 [mm]: depends on the number of stages (incl. blind stages)

Example: Sizes 10/15-21: F3 = 744 mm, F4 = 657 mm

Table 31: Dimensions

Size	E1	E2	LB	F1	F2	F3	F4
	[mm]	[mm]	[mm]	[mm]	[mm]	[mm]	[mm]
10/01-02 B	157	133	257	520	263	366	154
10/02-02 B	180	145	257	530	272	376	154
10/03-03 B	180	145	310	610	300	429	181
10/04-04 B	200	155	318	654	336	447	207
10/05-05 B	223	166	325	688	363	454	234
10/06-06 B	223	166	325	741	416	454	260
10/07-07 B	260	190	350	847	497	560	287
10/08-08 B	260	190	350	873	523	560	313
10/09-09 B	260	190	387	938	549	597	339
10/10-10 B	260	190	387	963	576	597	366
10/11-11 B	260	190	387	989	602	597	392
10/13-13 B	315	260	504	1189	685	744	445
10/15-15 B	315	260	504	1242	738	744	498
10/15-17 B	315	260	504	1295	791	744	551
10/15-19 B	315	260	504	1348	844	744	604
10/15-21 B	315	260	504	1401	897	744	657

1798.54/10-EN

Movitec VCI 15C, n = 2900 rpm

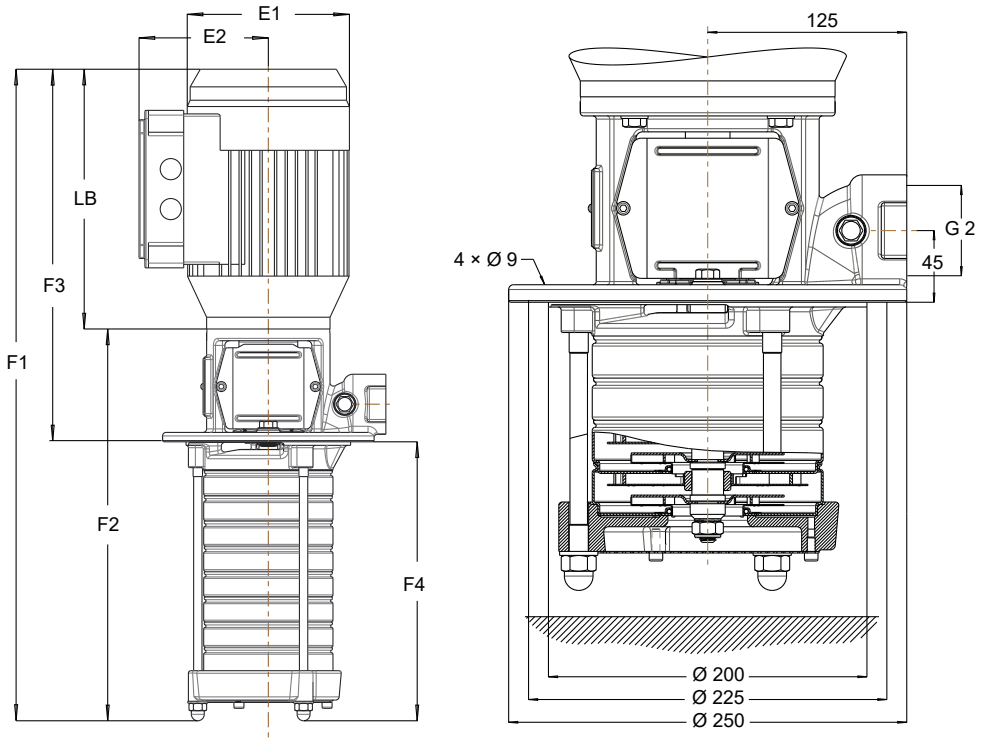

Fig. 22: Movitec VCI 15C dimensions / connections

Table 32: Calculation of pump (set) length

Feature	Pump length	Pump set length
Pump without blind stage	F1	F2
Pump with blind stage	F3 + F4	F3 + F4 - LB

- F3 [mm]: depends on number of impellers
- F4 [mm]: depends on the number of stages (incl. blind stages)

Example: size 15/06-09: F3 = 663 mm, F4 = 471 mm

Table 33: Dimensions

Size	E1	E2	LB	F1	F2	F3	F4
	[mm]	[mm]	[mm]	[mm]	[mm]	[mm]	[mm]
15/01-02 C	150	115	264	578	314	394	184
15/02-02 C	200	148	281	605	324	421	184
15/03-03 C	215	157	317	692	375	467	225
15/04-04 C	248	168	356	772	416	506	266
15/05-05 C	288	197	432	970	538	663	307
15/06-06 C	288	197	432	1011	579	663	348
15/07-07 C	288	197	432	1052	620	663	389
15/08-08 C	340	223	533	1194	661	764	430
15/09-09 C	340	223	533	1235	702	764	471
15/10-10 C	340	223	533	1276	743	764	512
15/11-11 C	340	223	533	1317	784	764	553
15/13-13 C	340	223	533	1399	866	764	635
15/15-15 C	340	223	533	1481	948	764	717
15/17-17 C	340	223	533	1563	1030	764	799

Movitec VCI 15C, n = 3500 rpm

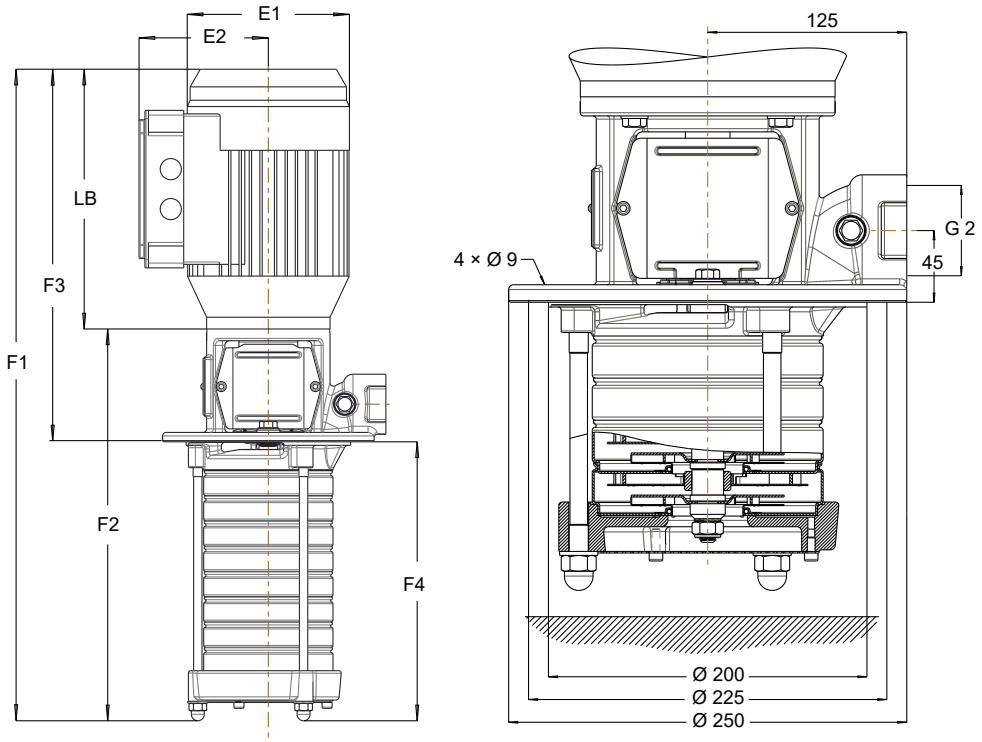

Fig. 23: Dimensions / connections Movitec VCI 15C

Table 34: Calculation of pump (set) length

Feature	Pump length	Pump set length
Pump without blind stage	F1	F2
Pump with blind stage	F3 + F4	F3 + F4 - LB

- F3 [mm]: depends on number of impellers
- F4 [mm]: depends on the number of stages (incl. blind stages)

Example: Sizes 15/06-09: F3 = 764 mm, F4 = 339 mm

Table 35: Dimensions

Size	E1	E2	LB	F1	F2	F3	F4
	[mm]	[mm]	[mm]	[mm]	[mm]	[mm]	[mm]
15/01-02 C	200	148	281	605	324	421	184
15/02-02 C	248	168	356	690	334	506	184
15/03-03 C	288	197	432	888	456	663	225
15/04-04 C	288	197	432	929	497	663	266
15/05-05 C	340	223	533	1071	538	764	307
15/06-06 C	340	223	533	1112	579	764	348
15/07-07 C	340	223	533	1153	620	764	389
15/08-08 C	340	223	533	1194	661	764	430
15/09-09 C	340	223	533	1235	702	764	471
15/10-10 C	340	223	533	1276	743	764	512
15/11-11 C	340	223	533	1317	784	764	553

1798.54/10-EN

General arrangement drawings with list of components

Movitec VCI 2B, 4B, 6B, 10B

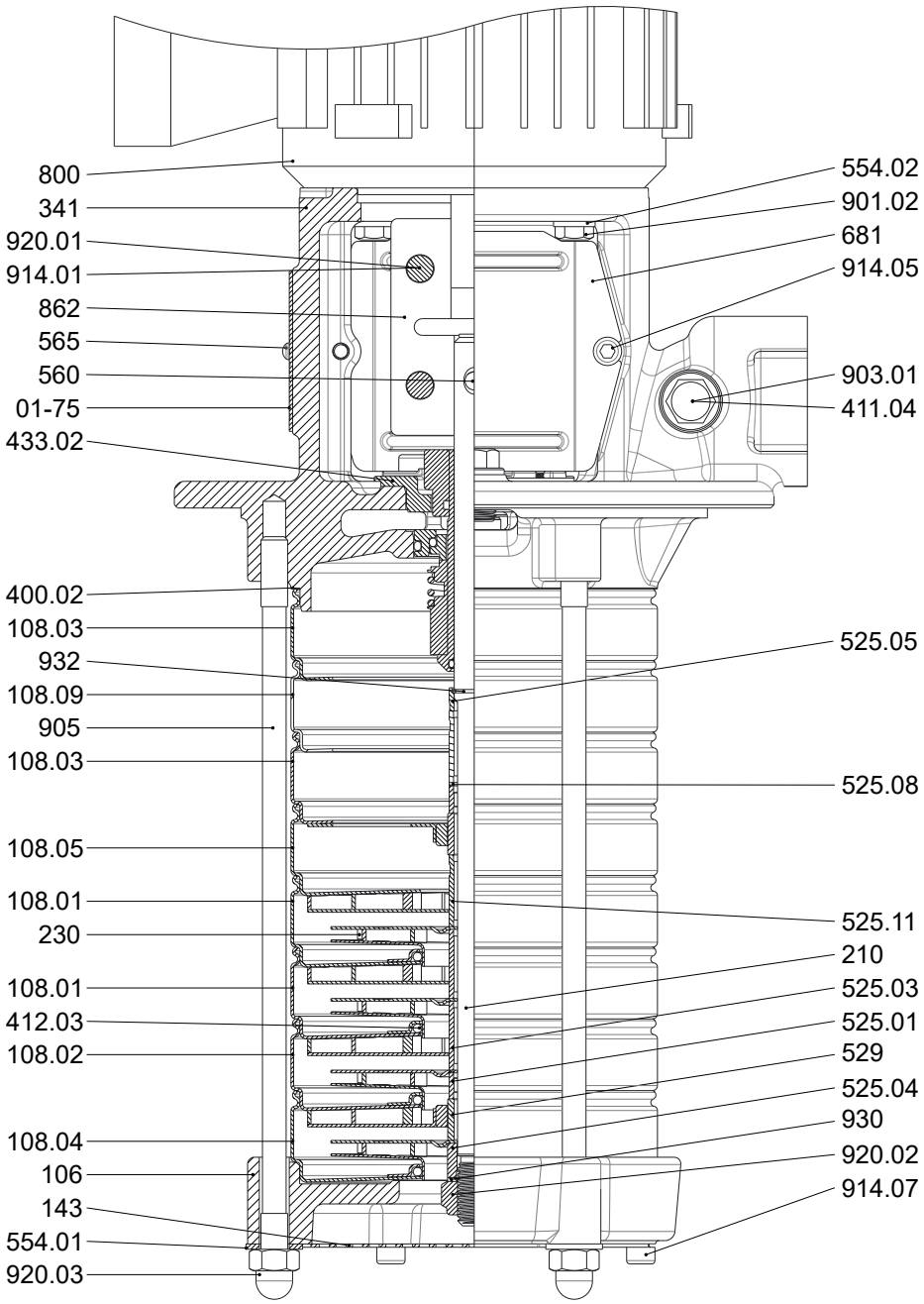

Fig. 24: General assembly drawing

Table 36: List of components

Part No.	Description	Part No.	Description
01-75	Name plate	554.01/.02	Washer
106	Suction casing	560	Pin
108.01/.02/.03/.04/.05/.09	Stage casing	565	Rivet
143	Suction strainer	681	Coupling guard
210	Shaft	800	Motor
230	Impeller	862	Coupling shell
341	Drive lantern	901.02	Hexagon head bolt
400.02	Gasket	903.01	Screw plug
411.04	Joint ring	905	Tie bolt
412.03	O-ring	914.01/.05/.07	Hexagon socket head cap screw

Part No.	Description	Part No.	Description
433.02	Mechanical seal	920.01/.03	Nut
525.01/.03/.04/.05/.08/.11	Spacer sleeve	930.02	Safety device
529	Bearing sleeve	932	Circlip

Movitec VCI 15C

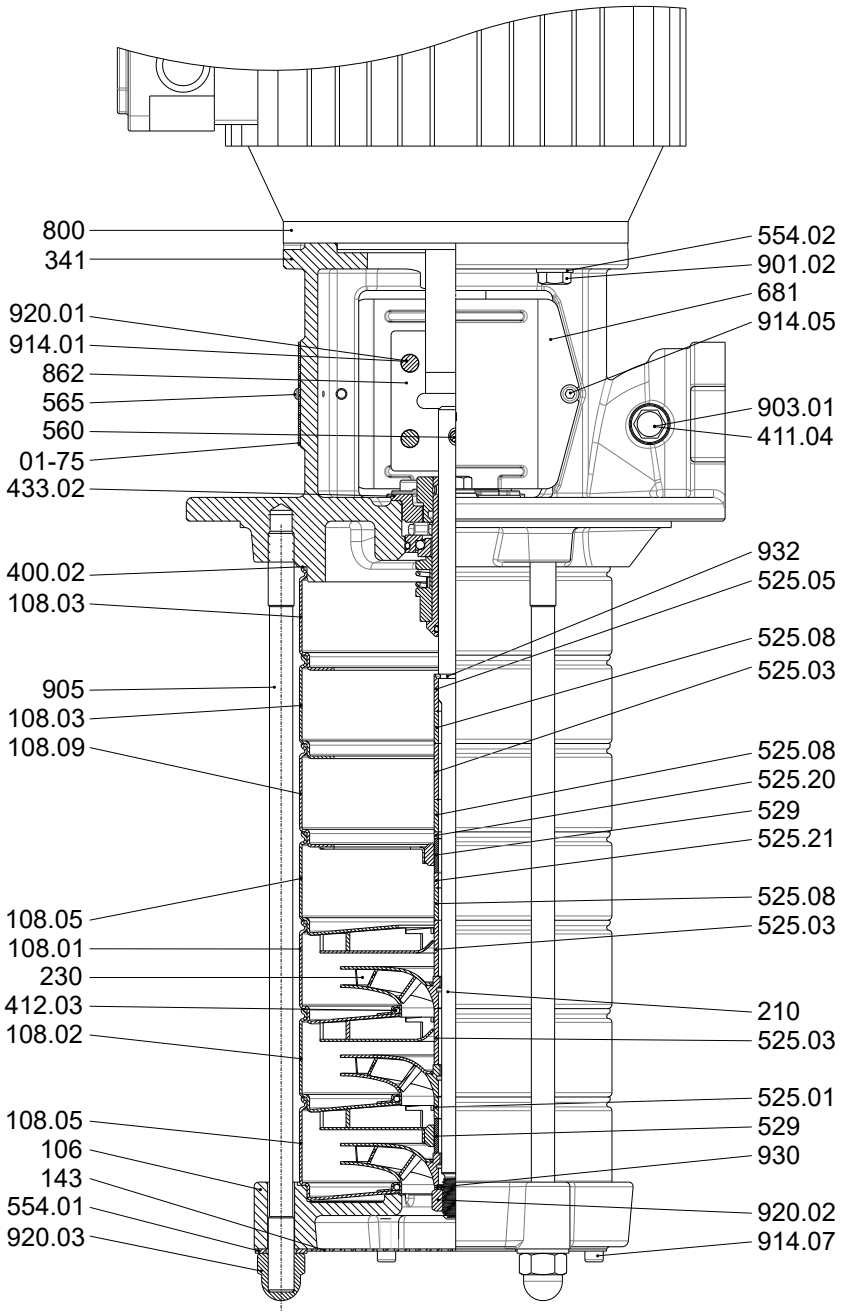

Fig. 25: General assembly drawing

Table 37: List of components

Part No.	Description	Part No.	Description
01-75	Name plate	554.01/.02	Washer
106	Suction casing	560	Pin
108.01/.02/.03/.05/.09	Stage casing	565	Rivet
143	Suction strainer	681	Coupling guard
210	Shaft	800	Motor
230	Impeller	862	Coupling shell
341	Drive lantern	901.02	Hexagon head bolt
400.02	Gasket	903.01	Screw plug
411.04	Joint ring	905	Tie bolt
412.03	O-ring	914.01/.05/.07	Hexagon socket head cap screw

Part No.	Description	Part No.	Description
433.02	Mechanical seal	920.01/.02/.03	Nut
525.01/.03/.05/.08/.20/.21	Spacer sleeve	930	Safety device
529	Bearing sleeve	932	Circlip

2024-07-11

1798.54/10-EN

LENNTECH
WATER TREATMENT SOLUTIONS
info@lenntech.com Tel. +31-152-610-900
www.lenntech.com Fax. +31-152-616-289