LENNTECH
WATER TREATMENT SOLUTIONS

Centrifugal Pump

Multitec / Multitec-RO

High-pressure Ring-section Pump

Type Series Booklet

KSB

Legal information/Copyright

Type Series Booklet Multitec / Multitec-RO

All rights reserved. The contents provided herein must neither be distributed, copied, reproduced, edited or processed for any other purpose, nor otherwise transmitted, published or made available to a third party without the manufacturer's express written consent.

Subject to technical modification without prior notice.

© KSB SE & Co. KGaA, Frankenthal 10/08/2021

Contents

Centrifugal Pumps **4**
Multistage High-pressure Centrifugal Pumps 4
Multitec / Multitec-RO 4
Main applications 4
Fluids handled 4
Operating data 4
Design details 4
Designation 5
Materials 5
Technical description 6
Operating ranges by installation type 8
Product benefits 9
Product information 9
Acceptance tests and warranty 9
Pressure and temperature limits 10
Materials 12
Seal codes for the mechanical seal 18
Seal codes for the gland packing 19
Technical data 20
Noise characteristics 20
Selection charts 22
Drive 25
Dimensions 26
Flange design (standard) 33
Nozzle positions 35
General assembly drawing with list of components (example) 36

Centrifugal Pumps

Multistage High-pressure Centrifugal Pumps

Multitec / Multitec-RO

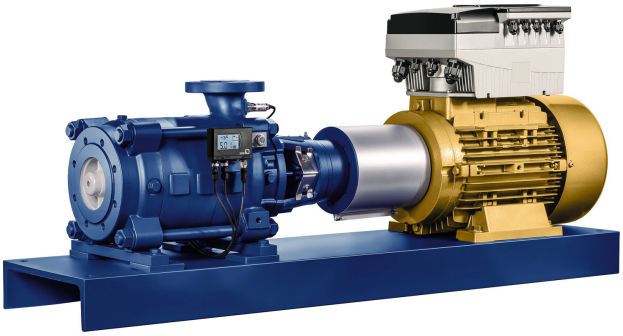

The product illustrated as an example may include options incurring a surcharge.

Main applications

- Water supply systems
- Drinking water supply
- Pressure boosting
- General irrigation systems
- Fossil-fuelled power stations
- Hot-water supply
- Condensate transport
- Boiler feed applications
- Heating systems
- Filtering systems
- Fire-fighting systems
- Snow-making systems
- Washing plants
- Industrial plants
- Desalination plants
- Geothermal plants
- Heat recovery systems

Fluids handled

- Water
- Drinking water
- Boiler feed water
- High-temperature hot water
- Condensate
- Fire-fighting water
- Solvents
- Lubricants
- Fuels
- Cooling water
- Water/oil emulsions
- Seawater
- Thermal water

Operating data

Table 1: Operating properties

Characteristic		Value
Size	DN	32 - 250
Flow rate	Q [m³/h]	≤ 1500
	Q [l/s]	≤ 417
Head	H [m]	≤ 1000 [1]
Fluid temperature	T [°C]	≥ -10
		≤ +200 [1]
Operating pressure	p_2 [bar][2]	≤ 100 [1]

Design details

Design

- Multistage centrifugal pump in ring-section design
- Horizontal installation in long-coupled or close-coupled design
- Vertical installation in close-coupled design or with universal joint shaft

Pump casing

- Suction casing: axial or radial
- Radial suction casing and discharge casing: nozzles can be turned in steps of 90°
- Flanges to EN and ASME (holes and flange facing)
- Identical seal housing for gland packing and mechanical seal
- Stage casings, discharge casings and seal housing sealed by confined O-rings

Drive

- 50 Hz and 60 Hz electric motor
- Can be driven by diesel engine or turbine

Impeller type

- Closed radial impeller with multiply curved vanes

1 Only for individual sizes/designs
2 The sum of inlet pressure and shut-off head must not exceed the value indicated.

1777.5/12-EN

Bearings

- Fixed bearing, drive end, rolling element bearing
- Radial bearing, non-drive end, either plain bearing or rolling element bearing, depending on the type of installation
- Rolling element bearing grease or oil lubricated
- Plain bearing lubricated by fluid handled
- Self-aligning

Coupling

- Long-coupled design, flexible coupling with or without spacer
- Close-coupled design up to DN 65 with rigid coupling, larger designs with flexible coupling without spacer

Coupling guard

Standard:

- Coupling guard, cylindrical

Optional:

- Coupling guard, tread-proof

Shaft seal

- Uncooled gland packing, with or without barrier fluid
- Standardised mechanical seal to EN 12756
- Cartridge seal

Designation

Example: Multitec[3] A 32/8E-2.1 12.167 (SP)

Table 2: Designation key

Code	Description
Multitec	Type series
A	Installation type
32	Nominal discharge nozzle diameter [mm]
8E	No. of stages / impeller combination
2.1	Hydraulic system
12	Material code
167	Seal code
SP	Code for special variants (optional)

Example: Multitec-RO[4] A 100/5-8.1 31.80

Table 3: Designation key

Code	Description
Multitec-RO	Type series
A	Installation type
100	Nominal discharge nozzle diameter [mm]
5	Number of stages
8.1	Hydraulic system
31	Casing material (duplex steel)
80	Seal code

Materials

- Casing: grey cast iron, nodular cast iron, steel, stainless steel, duplex stainless steel, super duplex stainless steel
- Hydraulic system: grey cast iron, bronze, stainless steel, duplex stainless steel, super duplex stainless steel

1777.5/12-EN

3 Code: MTC
4 Code: MTC-RO

Technical description

Table 4: Installation types A / B / C / D

Description	Installation type			
	A[5]	B[5]	C[5]	D[6]
	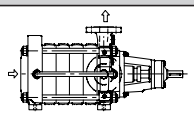	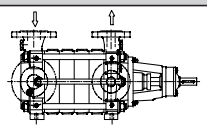	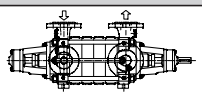	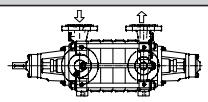
	Horizontal design, long-coupled	Horizontal design, long-coupled	Horizontal design, long-coupled	Horizontal design, long-coupled
	1 shaft passage (drive end)	1 shaft passage (drive end)	2 shaft passages	2 shaft passages
	Rolling element bearing at the drive end / plain bearing on the suction side	Rolling element bearing at the drive end / plain bearing on the suction side	Rolling element bearing at the drive end / rolling element bearing on the suction side	Rolling element bearing at the drive end / rolling element bearing on the discharge side
	Axial suction nozzle (block flange up to size 50)	Radial suction nozzle	Drive on discharge side	Drive on suction side
	Drive on discharge side	Drive on discharge side	DN 200, DN 250: installation types C and D only	
Drive	Electric motor, diesel engine, turbine			
Axial thrust balancing	By balance drum[7]			
Q_{max} (50 Hz)[8]	850 m³/h		1500 m³/h	
H_{max}	630 m (1000 m[9])			
p_{2max}	63 bar (100 bar)[9])			
T_{max}	-10 °C to +45 °C (Multitec-RO) / +200 °C (Multitec)			
Shaft seal	Uncooled gland packing, cooled or uncooled mechanical seal; single or double cartridge seal			
Casing material	Grey cast iron, steel, stainless steel, duplex, superduplex stainless steel [10]		Grey cast iron, nodular cast iron[11], steel, stainless steel, duplex	
Hydraulic system material	Grey cast iron, bronze, stainless steel, duplex, superduplex stainless steel[10]		Grey cast iron, bronze, stainless steel, duplex	

5 The direction of rotation is clockwise, seen from the motor end.
6 The direction of rotation is counter-clockwise, seen from the motor end.
7 For small numbers of stages without balance drum: The thrust bearing absorbs the axial thrust.
8 For 60 Hz values refer to the individual characteristic curves.
9 Only for individual sizes/designs
10 Only for Multitec RO, installation type A
11 For DN 200 and DN 250 only

Table 5: Installation types E / F / V

Description	Installation type			
	E[5]	F[5]	V[5]	
	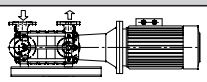	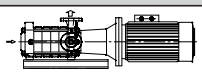	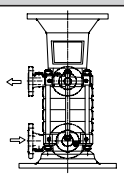	
	Horizontal close-coupled pump	Horizontal close-coupled pump	Vertical close-coupled pump	
	Common bearing for pump and motor	Common bearing for pump and motor		
	Rigid coupling	Rigid coupling		
	Radial suction nozzle	Axial suction nozzle		
	Plain bearing on the suction side	Plain bearing on the suction side		
H/Q range[8]	100 m³/h, 250 m, up to nominal diameter 65	100 m³/h, 250 m, up to nominal diameter 65	Up to 200 kW	
Drive	Standardised motor		Standardised motor, fixed bearing at the drive end[12]	Standardised motor
Fixed bearing	Motor[12]		Motor[12]: DN 32, DN 50, DN 65	In lantern: DN 100, DN 125, DN 150, DN 200
Axial thrust balancing	By balance drum[7]		By balance drum	By balance drum[7]
Q_{max}[8]	100 m³/h		850 m³/h	
H_{max}	250 m		630 m (1000 m[13])	
$p_{2\,max}$	40 bar		63 bar/100 bar[13]	
T_{max}	-10 °C to +140 °C		-10 °C to +140 °C	
Shaft seal	Uncooled gland packing, uncooled mechanical seal, single		Uncooled gland packing, uncooled mechanical seal, single	
Casing material	Grey cast iron		Grey cast iron, nodular cast iron[14], steel, stainless steel Duplex stainless steel for Multitec-RO	
Hydraulic system material	Grey cast iron, bronze		Grey cast iron, bronze, stainless steel Duplex stainless steel for Multitec-RO	

12 On Multitec 32, Multitec 50 and Multitec 65 the motor bearings on the coupling side are fixed bearings.
13 Only available for selected sizes
14 For Multitec 200 only

Operating ranges by installation type

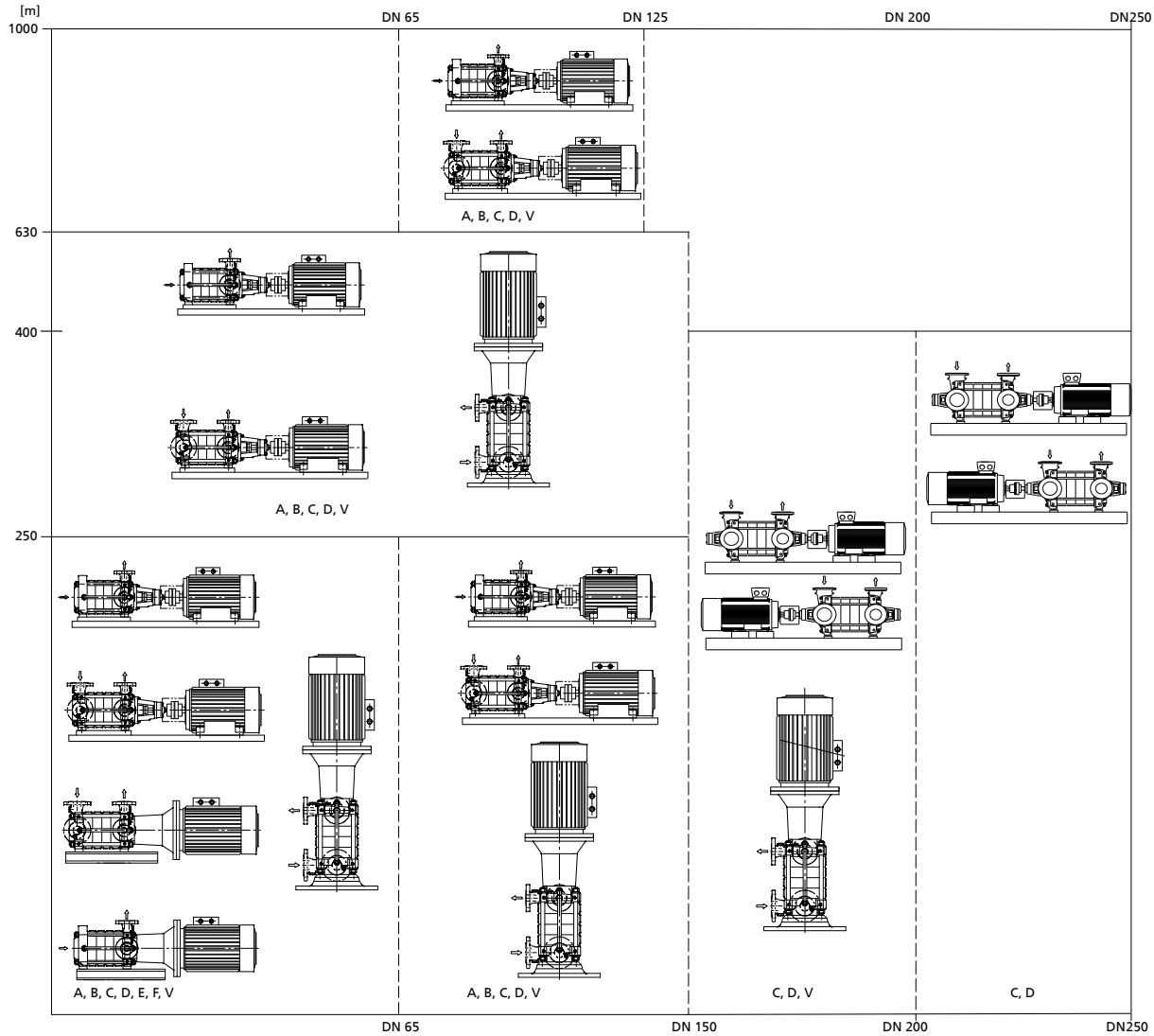

Fig. 1: Operating ranges by installation type

1777.5/12-EN

Product benefits

- Flexible, best matching adaptation to system condition by variety of installation types and variable nozzle position
- Low NPSH value, improved suction behaviour and operating reliability for suction lift operation by special suction stage impeller
- Optimised efficiencies and reduced operating costs by newly developed hydraulic system
- Versatile use by broad range of installation types, materials and shaft seals

Product information

Product information as per Regulation No. 1907/2006 (REACH)

For information as per chemicals Regulation (EC) No. 1907/2006 (REACH), see https://www.ksb.com/ksb-en/About-KSB/Corporate-responsibility/reach/ .

Acceptance tests and warranty

Certificates / inspections/ acceptance tests on request:

- Test reports 2.2 to EN 10204 for pressure-retaining components, shaft and impellers
- Hydrostatic pressure test of pressure-retaining components
- Balancing test
- Hydraulic tests:
  - Performance test to ISO 9906 or Hydraulic Institute
  - NPSH test
  - Vibration test
  - Bearing temperature measurement
- Strip test
- Dimensional inspection
- Coating inspection
- Final inspection and testing

1777.5/12-EN

Pressure and temperature limits

Material JL1040 (GJL-250), EN-GJS 400-15[15)]

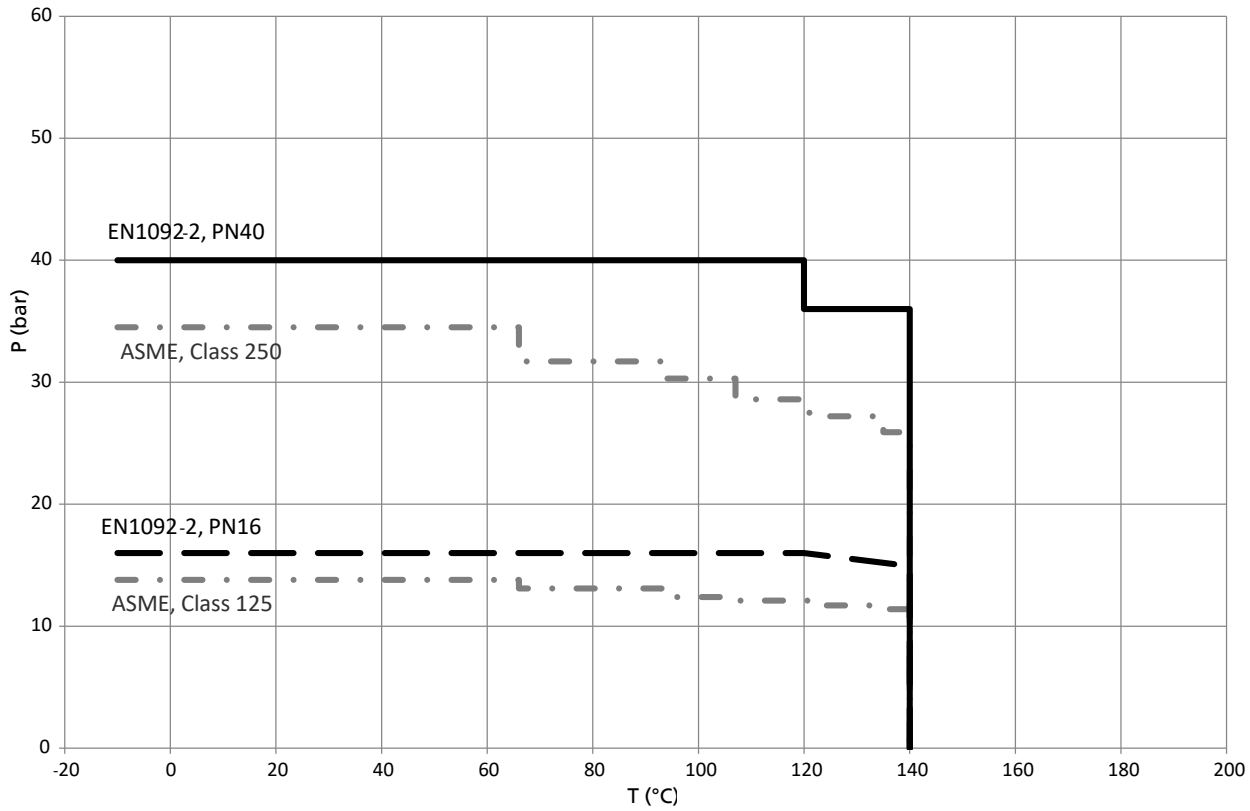

Material GP240GH+N (1.0619+N)

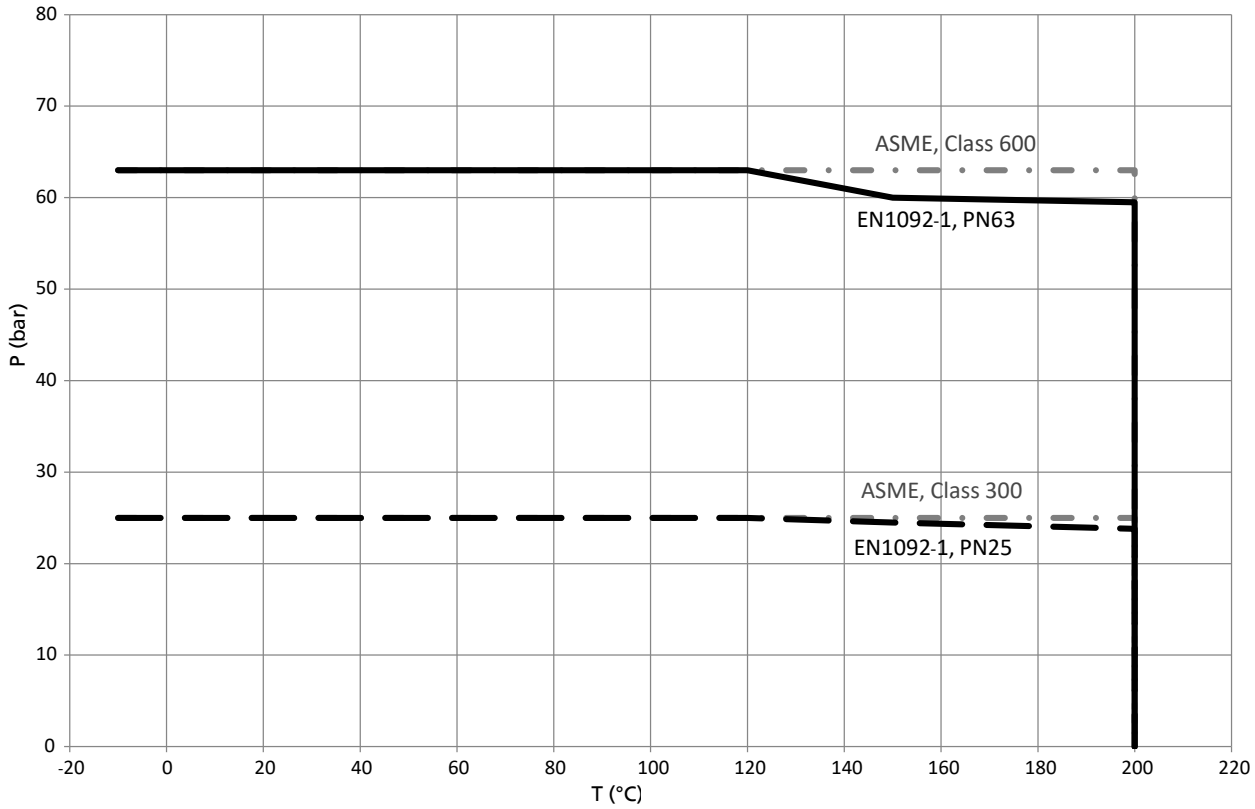

1777.5/12-EN

15 Only for fluid temperatures up to 60 °C

Material 1.4408

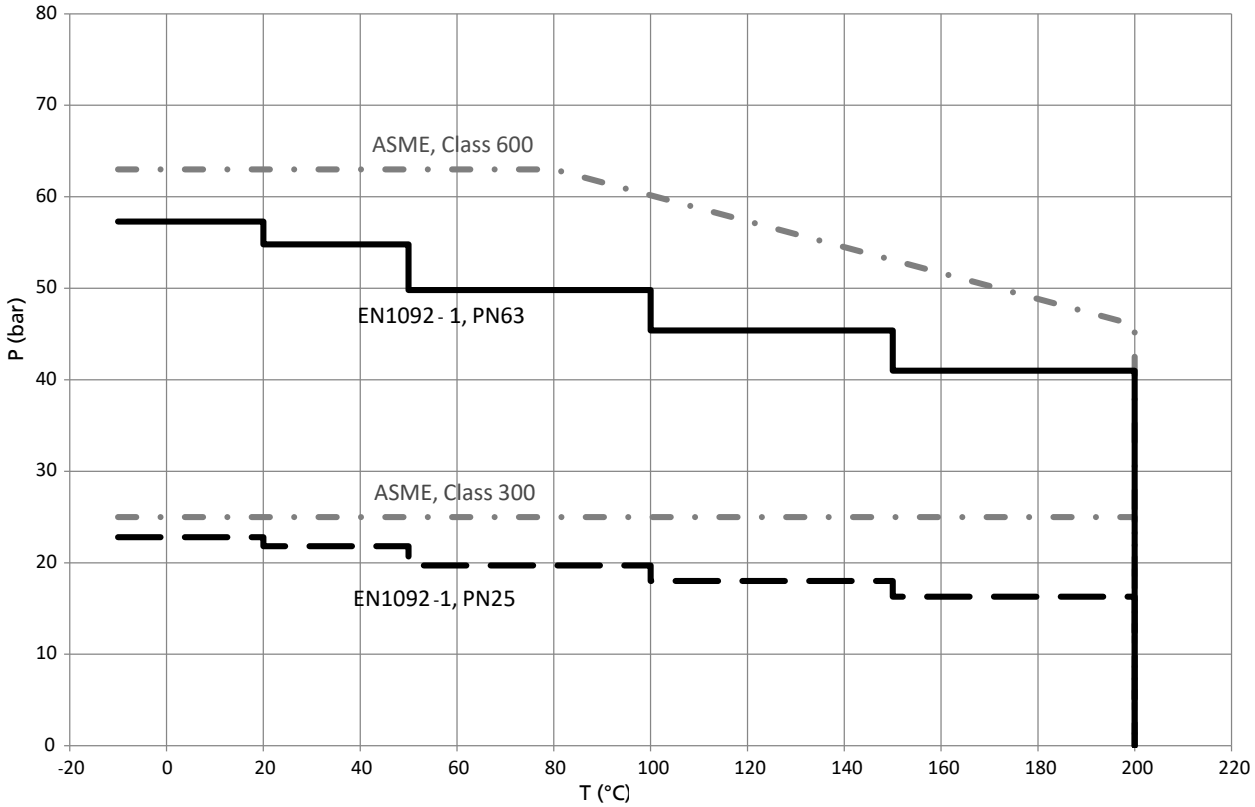

Material 1.4317, 1.4517, 1.4469

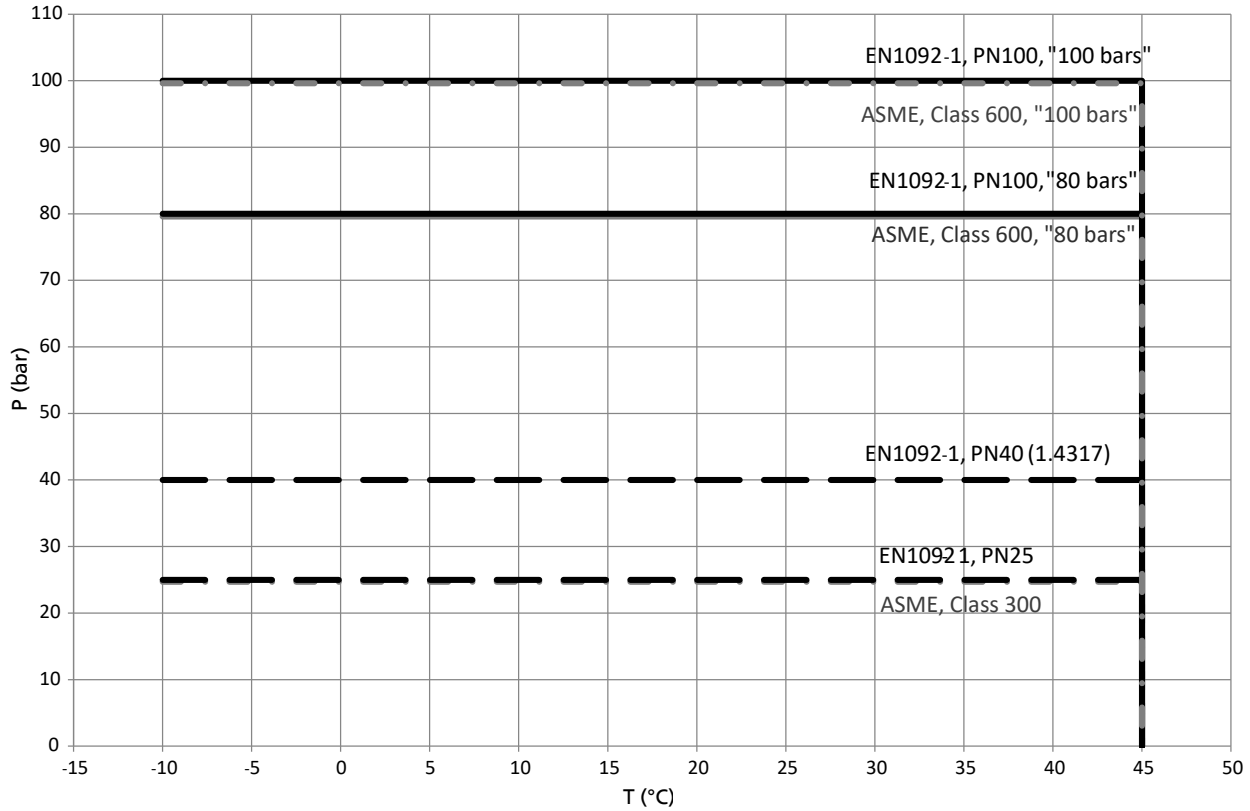

1777.5/12-EN

Materials

Table 6: Material code for variants with cast iron casing

Part No.	Description	Material code				
		10[16]	11[16][17]	12[16][17]	13[16]	14[16]
106	Suction casing	EN-GJL-250	EN-GJL-250[18] / EN-GJS-400-15[19]	EN-GJL-250[18] / EN-GJS-400-15[19]	EN-GJL-250	EN-GJL-250
107	Discharge casing	EN-GJL-250	EN-GJL-250[18] / EN-GJS-400-15[19]	EN-GJL-250[18] / EN-GJS-400-15[19]	EN-GJL-250	EN-GJL-250
108	Stage casing	EN-GJL-250	EN-GJL-250[18] / EN-GJS-400-15[19]	1.0576 S355J2H[20] / EN-GJL-250[21]/ EN-GJS-400-15[19]	EN-GJL-250	EN-GJL-250
171	Diffuser	EN-GJL-250[22]	EN-GJL-250[22]	CC480K-DW	EN-GJL-250[22]	EN-GJL-250[22]
210	Shaft	C45+N[23]	C45+N[23]/ 1.4021+QT[23]	C45+N[23]/ 1.4021+QT[23]	C45+N [23]	C45+N[23] [24]
230	Impeller	EN-GJL-250	CC480K-DW	CC480K-DW	EN-GJL-250	1.4408
231	Suction stage impeller	EN-GJL-250	CC480K-DW	CC480K-DW	1.4408	1.4408
350	Bearing housing	EN-GJL-250	EN-GJL-250 /EN-GJS-400-15[25]	EN-GJL-250 /EN-GJS-400-15[25]	EN-GJL-250	EN-GJL-250
381/529	Plain bearing	SiC/SiC	SiC/SiC	SiC/SiC	SiC/SiC	SiC/SiC
441	Stuffing box housing	EN-GJL-250	EN-GJL-250 / GP240GH+N / EN-GJS-400-15[26]	EN-GJL-250 / GP240GH+N / EN-GJS-400-15[26]	EN-GJL-250	EN-GJL-250
502.1	Casing wear ring (suction side)	EN-GJL-250[27]	1.4138[27]	1.4138[27]	EN-GJL-250[27]	EN-GJL-250[27]
502.2 [28]	Casing wear ring (stages)	EN-GJL-250	1.4138	1.4138	EN-GJL-250	EN-GJL-250
502.3[19]	Casing wear ring (diffuser)	-	1.4138	1.4138	-	-
523	Shaft sleeve (mechanical seal)	1.4057+QT800	1.4057+QT800	1.4057+QT800	1.4057+QT800	1.4057+QT800
524	Shaft protecting sleeve (gland packing)	1.4122	1.4122	1.4122	1.4122	1.4122
550.1[29]	Sheet metal disc	1.4301	1.4301	1.4301	1.4301	1.4301
59-4	Balance drum	1.4021	1.4021	1.4021	1.4021	1.4021
540	Bush	EN-GJL-250	EN-GJL-250	EN-GJL-250	EN-GJL-250	EN-GJL-250
905	Tie bolt	42 CrMo4	42 CrMo4	42 CrMo4	42 CrMo4	42 CrMo4

16 Suitable for fluid temperatures up to t ≤ 140 °C. Sizes DN 200 and DN 250 for fluid temperatures up to t ≤ 60 °C. Material codes 15, 16, 17 for fluid temperatures up to t ≤ 40 °C
17 Sizes DN 200 and DN 250 only available in material codes 11 and 12
18 Only for sizes DN 32 to DN 150
19 Only for sizes DN 200 and DN 250
20 For sizes DN 32 to DN 100
21 For sizes DN 125 to DN 150
22 Sizes DN 32 to DN 100: integrated in stage casing, sizes DN 125 to DN 250: separate
23 C45+N is not available for sizes DN 200 and DN 250. Shaft is also available in 1.4021 for sizes DN 32 to DN 150. Shaft for sizes DN 200 and DN 250 is only available in 1.4021.
24 Available in 1.4462
25 Only for size DN 250, all other sizes in material EN-GJL-250
26 For sizes DN 32 to DN 150 only in material EN-GJL-250. For size DN 200 only in GP240GH+N. For size DN 250 only in material EN-GJS-400-15.
27 For sizes DN 100 to DN 250
28 Only for sizes DN 125 to DN 250
29 For sizes DN 32 to DN 100 only; also used as casing wear ring

Table 7: Material codes for variants with grey cast iron / steel casing

Part No.	Description	Material code		
		15[16)]	16[16)]	17[16)]
106	Suction casing	GP240GH+N	GP240GH+N	GP240GH+N
107	Discharge casing	GP240GH+N	GP240GH+N	GP240GH+N
108	Stage casing	EN-GJL-250	1.0576 S355J2H[20)] / EN-GJL-250[21)]	EN-GJL-250
171	Diffuser	EN-GJL-250[22)]	CC480K-DW	EN-GJL-250 [22)]
210	Shaft	C45+N[23)]	C45+N[23)]	C45+N[23)]
230	Impeller	CC480K-DW	CC480K-DW	EN-GJL-250
231	Suction stage impeller	CC480K-DW	CC480K-DW	EN-GJL-250
350	Bearing housing	EN-GJL-250	EN-GJL-250	EN-GJL-250
381/529	Plain bearing	SiC/SiC	SiC/SiC	SiC/SiC
441	Stuffing box housing	EN-GJL-250	EN-GJL-250	EN-GJL-250
502.1	Casing wear ring (suction side)	1.4138	1.4138	EN-GJL-250
502.2 [28)]	Casing wear ring (stages)	1.4138	1.4138	EN-GJL-250
502.3[19)]	Casing wear ring (diffuser)	-	-	-
523	Shaft sleeve (mechanical seal)	1.4057+QT800	1.4057+QT800	1.4057+QT800
524	Shaft protecting sleeve (gland packing)	1.4122	1.4122	1.4122
550.1[29)]	Sheet metal disc	1.4301	1.4301	1.4301
59-4	Balance drum	1.4021	1.4021	1.4021
540	Bush	EN-GJL-250	EN-GJL-250	EN-GJL-250
905	Tie bolt	30 NCD 16	30 NCD 16	30 NCD 16

Table 8: Material codes 20, 21, 22 and 23 for variants with cast steel casing

Part No.	Description	Material code			
		20	21	22	23
106	Suction casing	GP240GH+N	GP240GH+N	GP240GH+N	GP240GH+N
107	Discharge casing	GP240GH+N	GP240GH+N	GP240GH+N	1.4408
108	Stage casing	1.0576 S355J2H[20] / GP240GH+N[21]	1.0576 S355J2H[20] / GP240GH+N[21]	1.0576 S355J2H[20] / GP240GH+N[21]	1.0576 S355J2H[20] / GP240GH+N[21]
171	Diffuser	EN-GJL-250	EN-GJL-250	1.4408	1.4408
210	Shaft	C45+N[23]	C45+N[23]	1.4021+QT[24]	1.4021+QT[24]
230	Impeller	EN-GJL-250	EN-GJL-250	1.4408	1.4408
231	Suction stage impeller	EN-GJL-250	1.4408	1.4408	1.4408
350	Bearing housing	EN-GJL-250	EN-GJL-250	EN-GJL-250	EN-GJL-250
381/529	Plain bearing	SiC/SiC	SiC/SiC	SiC/SiC	SiC/SiC
441	Stuffing box housing	GP240GH+N / 1.4404[30]	GP240GH+N / 1.4404 [30]	GP240GH+N / 1.4404 [30]	1.4408 / 1.4404 [30]
502.1	Casing wear ring (suction side)	EN-GJL-250	EN-GJL-250	1.4138	1.4138
502.2 [28]	Casing wear ring (stages)	EN-GJL-250	EN-GJL-250	1.4138	1.4138
502.3[19]	Casing wear ring (diffuser)	-	-	-	-
523	Shaft sleeve (mechanical seal)	1.4057+QT800	1.4057+QT800	1.4571	1.4571
524	Shaft protecting sleeve (gland packing)	1.4122	1.4122	1.4122	1.4122
550.1[29]	Sheet metal disc	1.4301	1.4301	1.4571	1.4571
59-4	Balance drum	1.4021	1.4021	1.4021	1.4021
540	Bush	EN-GJL-250	EN-GJL-250	1.4021	1.4021
905	Tie bolt	30 NCD 16	30 NCD 16	30 NCD 16	30 NCD 16

30 For shaft seal codes 64 and 164 only 1.4404

Table 9: Material codes 25, 26, 27 and 28 for variants with cast steel casing

Part No.	Description	Material code			
		25	26	27	28
106	Suction casing	GP240GH+N	GP240GH+N	GP240GH+N	1.4317
107	Discharge casing	GP240GH+N	GP240GH+N	1.4317	1.4317
108	Stage casing	1.0576 S355J2H [20]/ GP240GH+N[21]	1.0576 S355J2H [20]/ GP240GH+N[21]	1.0576 S355J2H [20]/ GP240GH+N[21] 1.4317[31]	1.0576 S355J2H [20]/ GP240GH+N[21] 1.4317[31]
171	Diffuser	EN-GJL-250	CC480K-DW	EN-GJL-250	EN-GJL-250
210	Shaft	C45+N[23]	C45+N[23]	1.4021+QT	1.4021+QT
230	Impeller	CC480K-DW	CC480K-DW	EN-GJL-250	EN-GJL-250
231	Suction stage impeller	CC480K-DW	CC480K-DW	EN-GJL-250	EN-GJL-250
350	Bearing housing	EN-GJL-250	EN-GJL-250	EN-GJL-250	EN-GJL-250
381/529	Plain bearing	SiC/SiC	SiC/SiC	SiC/SiC	SiC/SiC
441	Stuffing box housing	GP240GH+N / 1.4404[30]	GP240GH+N / 1.4404[30]	GP240GH+N / 1.4404[30]	GP240GH+N / 1.4404[30]
502.1	Casing wear ring (suction side)	1.4138	1.4138	EN-GJL-250	EN-GJL-250
502.2 [28]	Casing wear ring (stages)	1.4138	1.4138	EN-GJL-250	EN-GJL-250
502.3[19]	Casing wear ring (diffuser)	-	-	-	-
523	Shaft sleeve (mechanical seal)	1.4057+QT800	1.4057+QT800	1.4057+QT800	1.4057+QT800
524	Shaft protecting sleeve (gland packing)	1.4122	1.4122	1.4122	1.4122
550.1[29]	Sheet metal disc	1.4301	1.4301	1.4301	1.4301
59-4	Balance drum	1.4021	1.4021	1.4021	1.4021
540	Bush	EN-GJL-250	EN-GJL-250	EN-GJL-250	EN-GJL-250
905	Tie bolt	30 NCD 16	30 NCD 16	30 NCD 16	30 NCD 16

31 Size DN 125: last stage casing made of 1.4317

Table 10: Material code for variants with stainless steel casing

Part No.	Description	Material code		
		30	31 / RO	33 / RO
106	Suction casing	1.4408	1.4517	1.4469 PREN 40
107	Discharge casing	1.4408	1.4517	1.4469 PREN 40
108	Stage casing	1.4404[20)]/ 1.4408[21)]	1.4517	1.4410[20)]/ 1.4469 PREN 40[21)]
171	Diffuser	1.4408	1.4517	1.4469 PREN 40
210	Shaft	1.4462	1.4462	1.4501
230	Impeller	1.4408	1.4517	1.4469 PREN 40
231	Suction stage impeller	1.4408	1.4517	1.4469 PREN 40
350	Bearing housing	EN-GJL-250	EN-GJL-250	EN-GJL-250
381/529	Plain bearing	SiC/SiC	SiC/SiC	SiC/SiC
441	Stuffing box housing	1.4408 / 1.4404[30)]	1.4517	1.4469 PREN 40
502.1	Casing wear ring (suction side)	1.4571	1.4462	1.4501
502.2 [28)]	Casing wear ring (stages)	1.4571	1.4462	1.4501
502.3[19)]	Casing wear ring (diffuser)	-	-	-
523	Shaft sleeve (mechanical seal)	1.4571	1.4462	1.4501
524	Shaft protecting sleeve (gland packing)	-	-	-
550.1[29)]	Sheet metal disc	1.4571	1.4539	1.4547
59-4	Balance drum	1.4404	1.4462	1.4501
540	Bush	1.4138	1.4462	1.4501
905	Tie bolt	30 NCD 16	30 NCD 16	30 NCD 16

Table 11: Materials key

Code / material No.	Description	NORM	To ASTM[32)]
1.4021+QT / X20Cr13+QT	Chrome steel	EN 10088	A276:420
1.4057+QT800 / X17CrNi16-2-QT800	Chrome nickel steel	EN 10088	A276:431
1.4122 / X35CrMo17	Chrome nickel steel	EN 10088	A276S42010
1.4138 / GX120CrMo29-2	Chrome nickel steel	SEW 410	-
1.4301 / X5CrNi18-10	Chrome nickel steel	EN 10088	A276:304
1.4317	Chrome nickel molybdenum cast steel	EN 10213	A487Gr.CA6NM
1.4404 / X2CrNiMo 17-12-2	Chrome nickel molybdenum steel	EN 10088	A276:316L
1.4408 / GX5CrNiMo19-11-2	Chrome nickel molybdenum cast steel	EN 10213	A743CF8M
1.4410	Super duplex stainless steel	EN 10088	A276 S32750
1.4462 / X2CrNiMoN22-5-3	Chrome nickel molybdenum steel	EN 10088	A473S32950
1.4469[33)]	Cast super duplex stainless steel	EN 10213	A995 Gr. 5A
1.4501	Super duplex stainless steel	EN 10088	A276 S32760
1.4517	Duplex stainless steel	EN 10213	A995 GR CD4MCuN
1.4539	Austenitic stainless steel	EN 10088	A240 N08904
1.4547	Austenitic stainless steel	EN 10088	A240 S31254
1.4571 / X6CrNiMoTi17-12-2	Chrome nickel molybdenum steel	EN 10088	A276:316
30 NCD 16	Steel bar	KSB materials data sheet, material identification code 1179	A540Gr.B24
42CrMo4 / 1.7225	Steel	EN 10083-1	A322GR.4140
C45+N / 1.0503+N	Steel	EN 10083-2	A29Gr.1045
CC480K-DW	Bronze	EN 1982	B505C90250
GP240GH+N / 1.0619+N	Cast steel	EN 10213	A216 WCB
EN-GJL-250	Grey cast iron	EN 1561	A48:40B
EN-GJS-400-15	Nodular cast iron	EN 1563	A536 Gr. 60_40_18
S355J2H / 1.0576	Steel	EN 10210	A618 Gr. III
SiC without free silicon	Silicon carbide	-	SiC without free silicon

32 Similar
33 PREN ≥ 40 to EN 10213

Seal codes for the mechanical seal

Available versions of mechanical seals:

- Balanced or unbalanced
- Uncooled up to 140 °C or cooled up to 200 °C
- Single or double
- Cartridge mechanical seal

Table 12: Key to the material code of the mechanical seal

Code	Material
A	Carbon graphite, antimony-impregnated
B	Carbon graphite, resin-impregnated
Q1	Silicon carbide, solid, sintered without pressure
Q12	Silicon carbide, shrink-fitted, sintered without pressure
U2	Tungsten carbide, Ni-bonded (solid)
U3	Tungsten carbide, NiCrMo-bonded
E	EPDM rubber
E4	EPDM peroxide-cured
V	Fluoroelastomer, e.g. Viton
V5	Fluoroelastomer, e.g. Viton (90 shore)
M	Hastelloy
G	CrNiMo steel

Table 13: Seal codes of the mechanical seal

Mechanical seal		Material	Static sealing elements	Uncooled				Cooled	Pressure [bar]	
				≤ 45 °C	≤ 100 °C	≤ 120 °C	≤ 140 °C	≤ 200 °C	min.	max.
Single mechanical seal	Bellows-type mechanical seal, unbalanced	U3BEGG	EPDM	61 (RGM13)		-		-	-0,2	18
	Balanced mechanical seal	Q1Q1VGG	FPM	163 (5B), 63 (H7N)		-		-	-0,2	16
		Q1Q1VGG	EPDM	43 (57B)		-		-	-0,2	25
		AQ1EGG, Q1A EGG[34]For 5B	EPDM	-				164 (5B), 64 (H7N)	-0,2	40
		BQ1EGG, Q1BE4GG[34]	EPDM	167 (5B), 67 (H7N)			-	-	-0,2	40
		AQ1EMG	EPDM	69 (HRN)				-	-0,5	25
		AQ1EGG, Q1AEGG[34]	EPDM	181 (5B), 42 (57B), 81 (H7N)				-	-0,2	40
		Q12Q1VGG[34]	FPM	53 (HJ977GN)		-	-	-	-0,2	10
		AQ1VGG,Q1A VGG	FPM	155 (5B), 45 (57B-BO), 55 (H7N)		-	-	-	-0,2	40
		BQ1EMG	EPDM	59 (HRN)			-	-	-0,5	25
		AQ1V5GG	EPDM	88 (H75N)	-				-0,2	50
	Bellows-type mechanical seal, unbalanced	U3U3VGG	FPM	68 (MG13-G60, MG1S4-G4)[35]		-	-	-	-0,2	12
	Mechanical seal, balanced	U2U2VGG, U3U3VGG	FPM	168 (5B)[36], 68 (H7N)[36]		-	-	-	-0,2	16
	Mechanical seal, unbalanced	AQ1VMM	FPM	80 (MG12-G6)	-			-	-0,2	16
		Q1AVMM	FPM	82 (M7N)	-			-	-0,2	25
		Q1Q1VMM	FPM	83 (MG12-G6)	-			-	-0,2	10
	Quench arrangement	AQ1EGG, Q1AEGG	EPDM	171 (5B), 71 (H7N)				-	-0,2	40
Double mechanical seal	Tandem arrangement	AQ1EGG, Q1AEGG	EPDM	172 (5B/5B), 72 (H7N/H7N)				-	-0,3	40
		AQ1VGG, Q1AVGG	FPM	174 (5B/5B), 74 (H7N/ H7N)		-	-	-	-0,3	40
	Back-to-back arrangement	AQ1EGG, Q1AEGG	EPDM	173 (5B/5B), 73 (H7N/H7N)				-	-0,98	40

1777.5/12-EN

34 For H7N
35 MG13 is available for sizes DN 32 and DN 50. MG1S4 is available for size DN 65.
36 Only available for sizes DN 100, 125, 150, 200 and 250

Mechanical seal		Material	Static sealing elements	Uncooled				Cooled	Pressure [bar]	
				≤ 45 °C	≤ 100 °C	≤ 120 °C	≤ 140 °C	≤ 200 °C	min.	max.
Double mechanical seal	Back-to-back arrangement	AQ1VGG, Q1AVGG	FPM	175 (5B/5B), 75 (H7N/H7N)		-	-	-	-0,98	40
Cartridge seal	Balanced mechanical seal	AQ1EMG	EPDM	92 (Cartex SN6)				-	-0,5	25
		Q1Q1VMG	FPM	93 (Cartex SN6)		-	-	-	-0,5	12
		AQ1VMG	FPM	95 (Cartex SN6)		-	-	-	-0,5	25

Seal codes for the gland packing

Available versions: uncooled up to 140 °C

Table 14: Seal codes for gland packing

Gland packing	Static sealing elements	Seal code		P_{max}
		Up to 100 °C	Up to 140 °C	[bar]
PTFE-impregnated polyacryl	FPM	65	-	25
PTFE-impregnated polyacryl	EPDM	66		25

Table 15: Gland packing versions

	N/b	N/c
System conditions	Suction head operation $P_{s\ absolute} \geq 1$ bar	$P_{s\ absolute} < 1$ bar (vessel under vacuum) with clean liquid from an external source Barrier pressure > pressure to be sealed off
Technical features	Without lantern ring	1 lantern ring, suction side 1 lantern ring, discharge side 2 tapped holes for piping

Technical data

Table 16: Technical data

Size	Shaft diameter at the coupling	Bearing			Gland packing			Shaft protecting sleeve		Drive (P/N value)				Other		
		Fixed bearing	Radial bearing	Plain bearing	Packing ring dimensions	Lantern ring width	Number of packing rings	Gland packing	Single mechanical seal	Shaft: C45+N	Shaft 1.4021+QT	Shaft 1.4462	Shaft 1.4501	Hydraulic system	Maximum impeller diameter	Spacer length of spacer-type couplings
	[mm]				[mm]			[mm]							[mm]	
32	22	6309 ZZ C3-HT	6309 ZZ C3-HT[37]	SiC	10 × 10	20	5	45 Ø	35/38 Ø	0,0214	0,0346	0,0302	0,0356	2,1	142	140
50	28	2 × 7309 BUA	6309 ZZ C3-HT[37]	SiC	10 × 10	20	5	45 Ø	35/38 Ø	0,0523	0,0846	0,0738	0,0869	3,1/ 4,1	170/ 173	140
65	32	2 × 7309 BUA	6309 ZZ C3-HT[37]	SiC	10 × 10	20	5	45 Ø	40 Ø	0,0697	0,1128	0,0984	0,1159	5,1/ 6,1	193/ 214	140
100	40	2 × 7312 BUA	6312C3	SiC	12 × 12	25	5	56 Ø	50 Ø	0,15	0,2426	0,2118	0,2495	7,1/ 8,1	241/ 245	180
125	50	2 × 7312 BUA	6312C3	SiC	12 × 12	25	6	66 Ø	60 Ø	0,3016	0,4879	0,4258	0,5016	9,1/ 9,2	301/ 273	180
125	50	2 × 7312 BUA	6312C3	SiC	12 × 12	25	6	66 Ø	60 Ø	0,3016	0,4879	0,4258	0,5016	10,1/ 10,2	305/ 270	180
150	60	2 × 7315 BUA	6315C3	SiC	16 × 16	32	6	78 Ø	70 Ø	0,5371	0,8688	0,7582	0,8930	11,1/ 11,2	378/ 342	200
150	60	2 × 7315 BUA	6315C3	SiC	16 × 16	32	6	78 Ø	70 Ø	0,5371	0,8688	0,7582	0,8930	12,1/ 12,2	382/ 337	200
200	60	2 × 7315 BUA	6315C3	SiC	16 × 16	32	6	78 Ø	70 Ø	-	0,8688	-	-	13,1/ 13,2	418/ 387	200
200	60	2 × 7315 BUA	6315C3	SiC	16 × 16	32	6	78 Ø	70 Ø	-	0,8688	-	-	14,1/ 14,2	426/ 390	200
250	72	2 × 7318 BUA	6318C3	-	16 × 16	32	6	90 Ø	85 Ø	-	1,38	-	-	15,1/ 15,2/ 16,1	477/4 31	250

Noise characteristics

Table 17: Surface sound pressure level L_{pA}[38) 39)]

Rated power input P_N [kW]	Pump		Pump with electric motor	
	1450 rpm [dB]	2900 rpm [dB]	1450 rpm [dB]	2900 rpm [dB]
2,2	56	57	60	65
3,0	58	60	62	67
4,0	59	61	63	68
5,5	61	63	65	70
7,5	63	65	66	71
9	64	66	68	73
11	65	67	68	73
15	66	68	70	75
18,5	67	69	71	76
22	68	70	72	77
30	69	71	73	78
37	70	72	74	79
45	71	73	75	79
55	71	74	75	80
75	72	74	77	82
90	72	75	77	82
110	73	75	78	83
132	73	76	78	83
160	74	76	79	84
200	75	77	80	85
250	75	78	80,5	-
315	76	78	81	-
355	78	80	81	-

37 Applies to grease-lubricated bearings. For oil-lubricated bearings: type 6309C3
38 Measured at a distance of 1 m from the pump outline (as per DIN 45635 Parts 1 and 24)
39 Increase for 60 Hz operation: 3500 rpm +3 dB, 1750 rpm +1 dB

Rated power input P_N [kW]	Pump		Pump with electric motor	
	1450 rpm [dB]	2900 rpm [dB]	1450 rpm [dB]	2900 rpm [dB]
400	79	81	82	-
500	80	82	82	-
560	80	82	82	-
630	82	83	84	-
710	82,5	84	84	-
800	82,5	-	84	-
900	82,5	-	84	-
1000	82,5	-	84	-
1120	82,5	-	84	-
1200	82,5	-	84	-
Up to 1400	83	-	84	-

Noise characteristics for other ratings/speeds on request.
Noise characteristics can only be guaranteed after consultation with the design/engineering department.

1777.5/12-EN

Selection charts

Multitec/Multitec-RO, 50 Hz, n = 2900 rpm

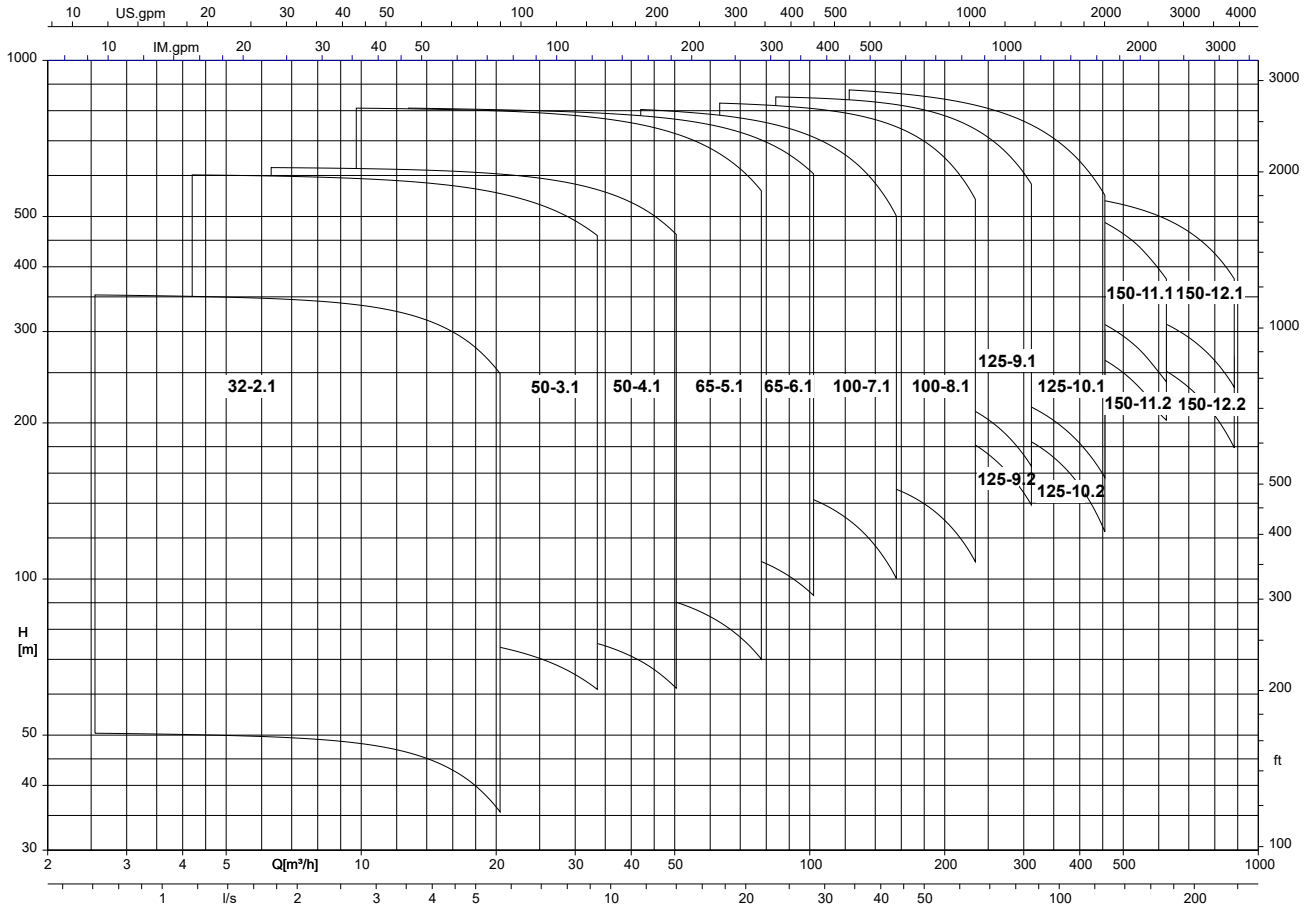

1777.5/12-EN

Multitec/Multitec-RO, 50 Hz, n = 1450 rpm

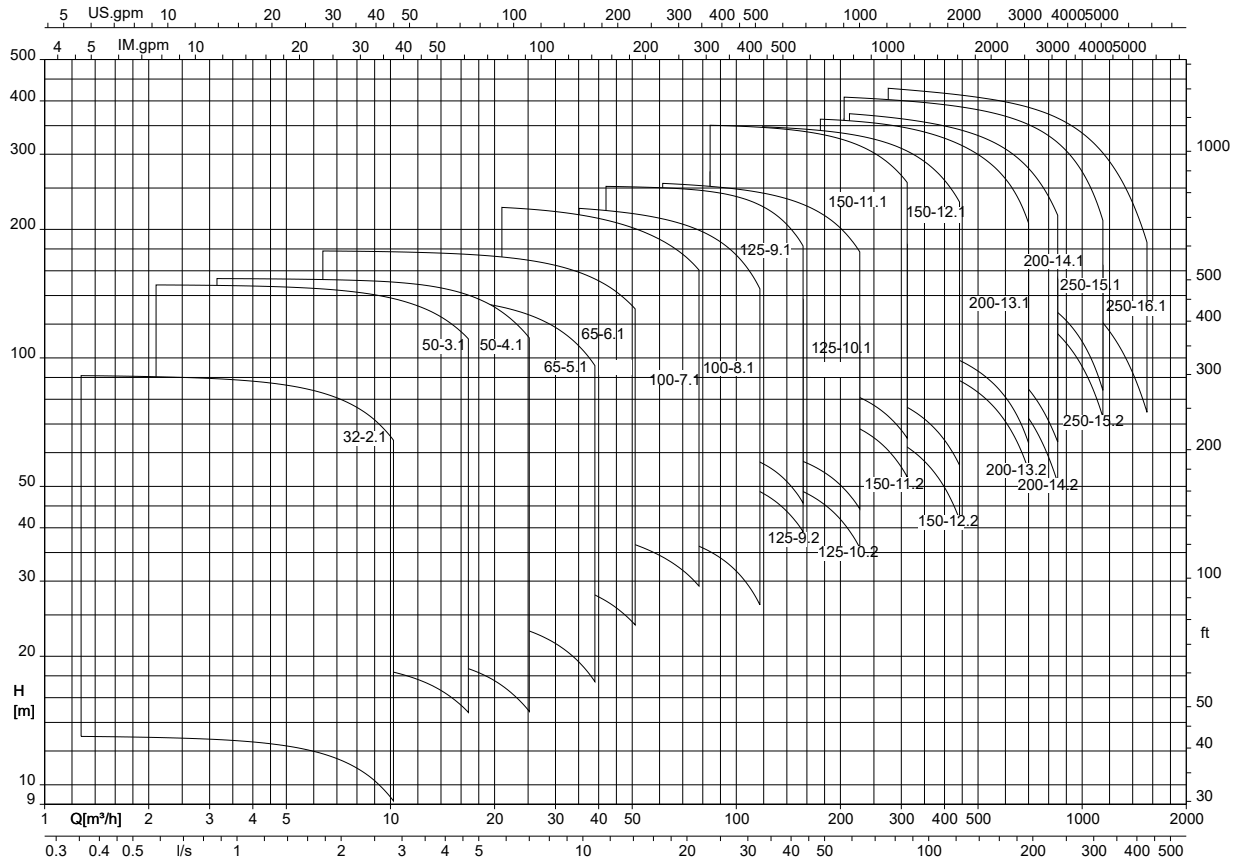

Multitec/Multitec-RO, 60 Hz, n = 3500 rpm

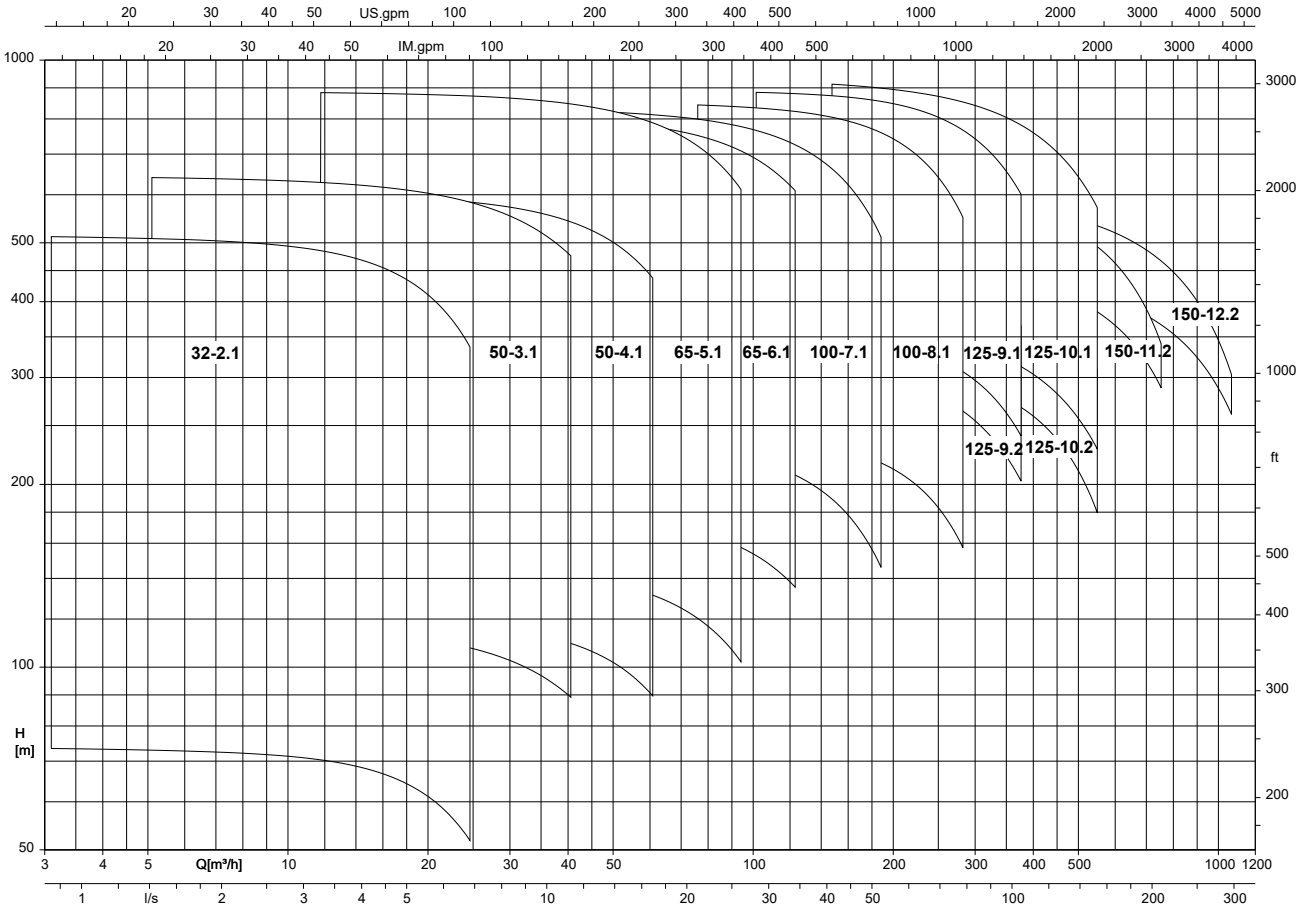

1777.5/12-EN

Multitec/Multitec-RO, 60 Hz, n = 1750 rpm

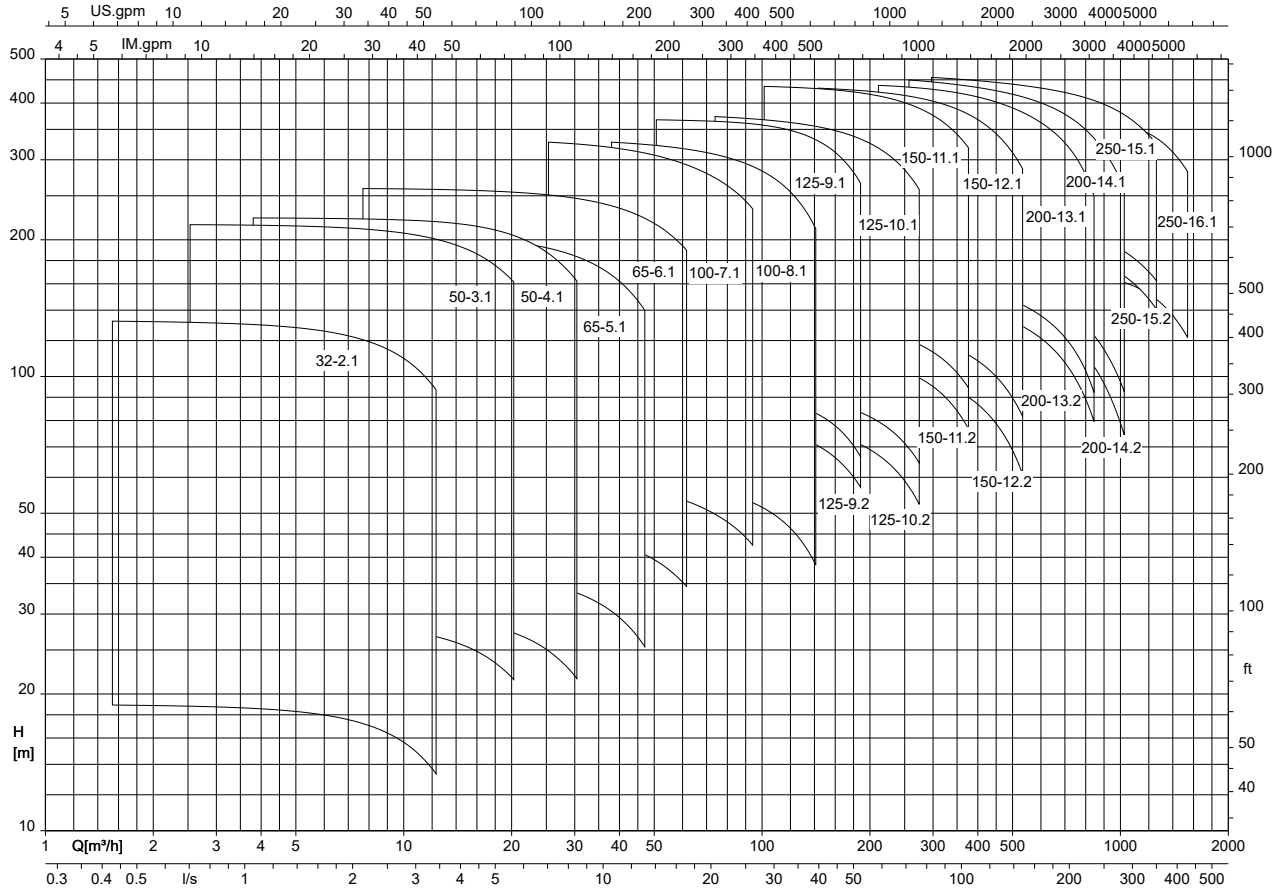

Drive

Table 18: Driven by a three-phase current squirrel-cage motor of the following types of construction

Description	Feature
Installation types A / B / C / D	IMB3
Installation types E / F	IMV1 up to 45 kW, for higher ratings IMB35
Installation type V	IMV1
Enclosure	IP55 / IP23
Thermal class	F
Pump direction of rotation	Installation types A / B / C / E / F / V: clockwise, seen from the drive end
	Installation type D: counter-clockwise, seen from the drive end
Options	Special voltages, explosion protection, insulated bearing, motor standstill heater

Dimensions

Dimensions of Multitec A / B / C / D and Multitec-RO

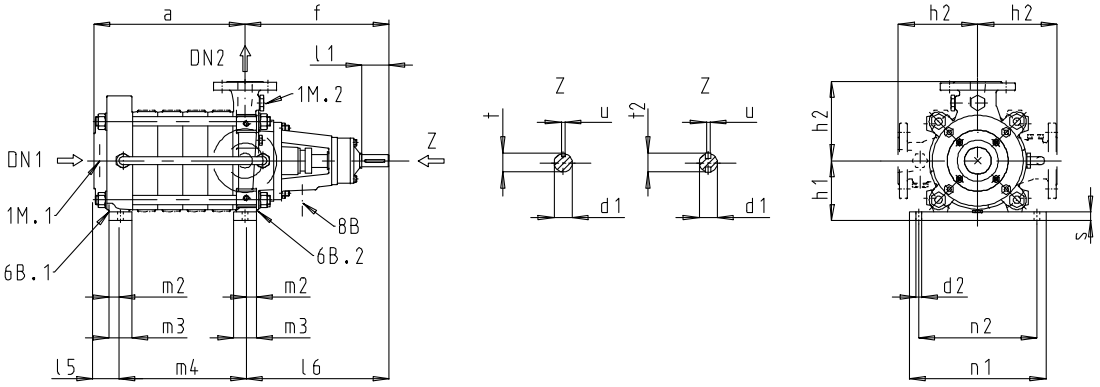

Fig. 2: Multitec A dimensions[40)]

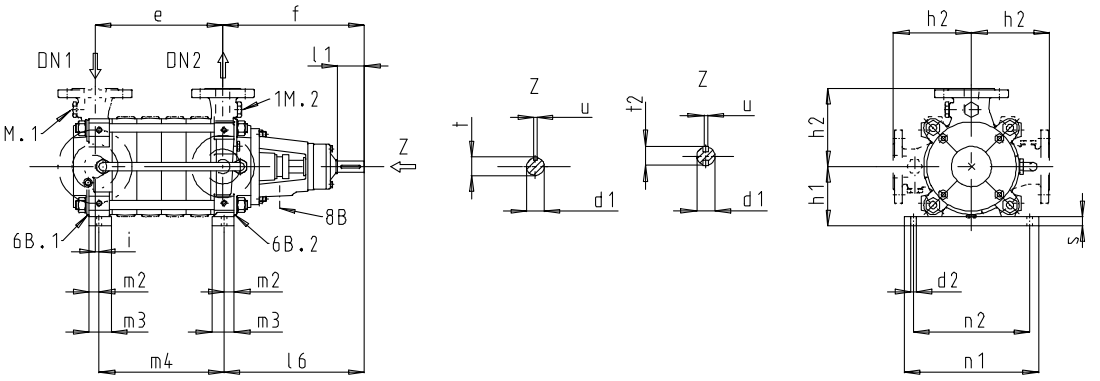

Fig. 3: Multitec B dimensions[40)]

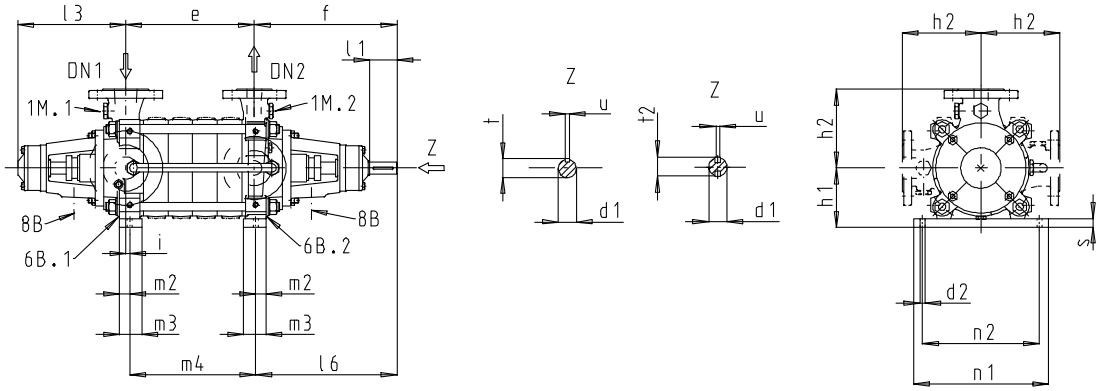

Fig. 4: Multitec C dimensions[40)]

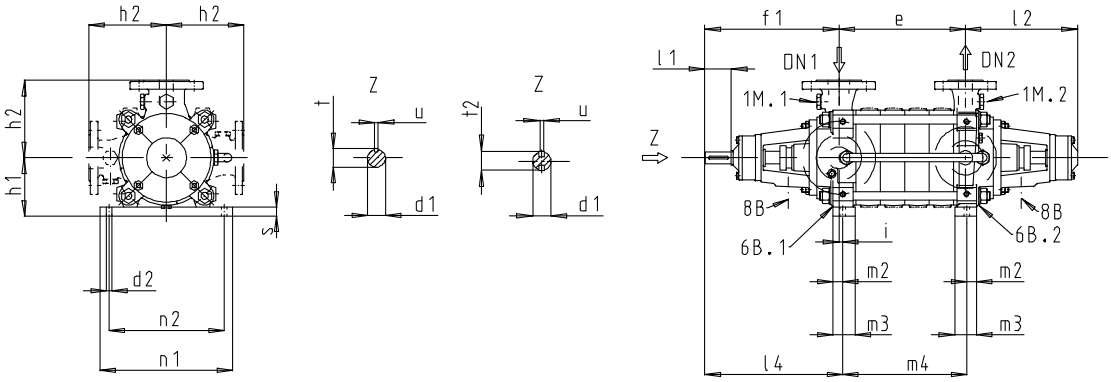

Fig. 5: Multitec D dimensions[40)]

40 Certain designs are fitted with a shaft with two keys.

Table 19: Shaft dimensions [mm]

Multitec A / B / C / D	d_1	t	t_2	u
32	22	24,5	-	6
50	28	31	-	8
65	32	35	38	10
100	40	43	46	12
125	50	53,5	57	14
150	60	64	-	18
200	60	64	-	18
250[41)]	72	76,5	-	20

Table 20: Connections

Connection	G = ISO 228/1	Multitec A / Multitec-RO A						Multitec B, C, D / Multitec-RO B, C, D							
	Rp = ISO 7/1	32	50	65	100	125	150	32	50	65	100	125	150	200[41)]	250[41)]
1M.1[42)]	G	-	-	1/2	1/2	1/2	1	1/2	1/2	1/2	1/2	1/2	1/2	1/2	1/2
1M.2[42)]	G	1/2	1/2	1/2	1/2	1/2	1/2	1/2	1/2	1/2	1/2	1/2	1/2	1/2	1/2
6B.1[42)]	G	-	-	1/4	1/2	1/2	1/2	1/4	1/4	1/2	1/2	1/2	1	1	1
6B.2[42)]	G	1/4	1/4	1/2	1/2	1/2	1/2	1/4	1/4	1/2	1/2	1/2	1/2	1	1
8B	Rp	3/8	3/8	3/8	3/8	3/8	3/8	3/8	3/8	3/8	3/8	3/8	3/8	3/8	G1/2

Table 21: Dimensions of Multitec A / B / C and D / Multitec-RO [mm]

Multitec A / B / C / D Multitec-RO	Number of stages	DN_1 Axial	DN_1 Radial	DN_2	a	$d_{1\,k7}$	d_2	e	f	f_1	h_1	h_2	i	l_1	l_2	l_3	l_4	l_5	l_6	m_2	m_3	m_4	n_1	n_2	s
Material codes 10, 11, 12, 13, 14, 15, 16, 17, 20, 21, 22, 23, 25, 26, 30																									
32	2	65	50	32	168	22	16	121	309	295	132	175	9	50	255	241	304	56	306	20	40	115	330	290	20
32	3	65	50	32	223	22	16	176	309	295	132	175	9	50	255	241	304	56	306	20	40	170	330	290	20
32	4	65	50	32	278	22	16	231	309	295	132	175	9	50	255	241	304	56	306	20	40	225	330	290	20
32	5	65	50	32	333	22	16	286	309	295	132	175	9	50	255	241	304	56	306	20	40	280	330	290	20
32	6	65	50	32	388	22	16	341	309	295	132	175	9	50	255	241	304	56	306	20	40	335	330	290	20
32	7	65	50	32	443	22	16	396	309	295	132	175	9	50	255	241	304	56	306	20	40	390	330	290	20
32	8	65	50	32	498	22	16	451	309	295	132	175	9	50	255	241	304	56	306	20	40	445	330	290	20
32	9	65	50	32	553	22	16	506	309	295	132	175	9	50	255	241	304	56	306	20	40	500	330	290	20
32	10	65	50	32	608	22	16	561	309	295	132	175	9	50	255	241	304	56	306	20	40	555	330	290	20
32	11	65	50	32	663	22	16	616	309	295	132	175	9	50	255	241	304	56	306	20	40	610	330	290	20
32	12	65	50	32	718	22	16	671	309	295	132	175	9	50	255	241	304	56	306	20	40	665	330	290	20
32	13	65	50	32	773	22	16	726	309	295	132	175	9	50	255	241	304	56	306	20	40	720	330	290	20
32	14	65	50	32	828	22	16	781	309	295	132	175	9	50	255	241	304	56	306	20	40	775	330	290	20
Material codes 10, 11, 12, 13, 14, 15, 16, 17, 20, 21, 22, 23, 25, 26, 30, 31 (RO), 33 (RO)																									
50	2	100	80	50	190[43)]	28	16	151	350	338	150	200	18	61	262	250	356	57[43)]	355	20	40	128	330	290	20
50	3	100	80	50	252[43)]	28	16	213	350	338	150	200	18	61	262	250	356	57[43)]	355	20	40	190	330	290	20
50	4	100	80	50	314[43)]	28	16	275	350	338	150	200	18	61	262	250	356	57[43)]	355	20	40	252	330	290	20
50	5	100	80	50	376[43)]	28	16	337	350	338	150	200	18	61	262	250	356	57[43)]	355	20	40	314	330	290	20
50	6	100	80	50	438[43)]	28	16	399	350	338	150	200	18	61	262	250	356	57[43)]	355	20	40	376	330	290	20
50	7	100	80	50	500[43)]	28	16	461	350	338	150	200	18	61	262	250	356	57[43)]	355	20	40	438	330	290	20
50	8	100	80	50	562[43)]	28	16	523	350	338	150	200	18	61	262	250	356	57[43)]	355	20	40	500	330	290	20
50	9	100	80	50	624[43)]	28	16	585	350	338	150	200	18	61	262	250	356	57[43)]	355	20	40	562	330	290	20
50	10	100	80	50	686[43)]	28	16	647	350	338	150	200	18	61	262	250	356	57[43)]	355	20	40	624	330	290	20
50	11	100	80	50	748[43)]	28	16	709	350	338	150	200	18	61	262	250	356	57[43)]	355	20	40	686	330	290	20
50	12	100	80	50	810[43)]	28	16	771	350	338	150	200	18	61	262	250	356	57[43)]	355	20	40	748	330	290	20
50	13	100	80	50	872[43)]	28	16	833	350	338	150	200	18	61	262	250	356	57[43)]	355	20	40	810	330	290	20
50	14	100	80	50	934[43)]	28	16	895	350	338	150	200	18	61	262	250	356	57[43)]	355	20	40	872	330	290	20
50	15	100	80	50	996[43)]	28	16	957	350	338	150	200	18	61	262	250	356	57[43)]	355	20	40	934	330	290	20
Material codes 10, 11, 12, 13, 14, 15, 16, 17, 20, 21, 22, 23, 25, 26, 27, 30, 31 (RO), 33 (RO)																									
65	2	125	100	65	247	32	20	189	393	380	190	225	18	82	303	291	399	77	394	30	60	169	405	365	25
65	3	125	100	65	326	32	20	268	393	380	190	225	18	82	303	291	399	77	394	30	60	248	405	365	25
65	4	125	100	65	405	32	20	347	393	380	190	225	18	82	303	291	399	77	394	30	60	327	405	365	25
65	5	125	100	65	484	32	20	426	393	380	190	225	18	82	303	291	399	77	394	30	60	406	405	365	25
65	6	125	100	65	563	32	20	505	393	380	190	225	18	82	303	291	399	77	394	30	60	485	405	365	25
65	7	125	100	65	642	32	20	584	393	380	190	225	18	82	303	291	399	77	394	30	60	564	405	365	25

41 For installation types C / D only
42 Not for Multitec-RO
43 Version with ANSI flanges, material variants 15, 16, 17, 20, 21, 22, 23, 25, 26, 30, 31 (RO): Add 15 mm to dimensions a and l5.

Multitec A / B / C / D Multitec-RO	Number of stages	DN_1 Axial	DN_1 Radial	DN_2	a	$d_{1\,k7}$	d_2	e	f	f_1	h_1	h_2	i	l_1	l_2	l_3	l_4	l_5	l_6	m_2	m_3	m_4	n_1	n_2	s
65	8	125	100	65	721	32	20	663	393	380	190	225	18	82	303	291	399	77	394	30	60	643	405	365	25
65	9	125	100	65	800	32	20	742	393	380	190	225	18	82	303	291	399	77	394	30	60	722	405	365	25
65	10	125	100	65	879	32	20	821	393	380	190	225	18	82	303	291	399	77	394	30	60	801	405	365	25
65	11	125	100	65	958	32	20	900	393	380	190	225	18	82	303	291	399	77	394	30	60	880	405	365	25
Material codes 31 (RO), 33 (RO)																									
65	12	125	-	65	1037	32	20	-	393	-	190	225	-	82	-	-	-	77	394	30	60	959	405	365	25
65	13	125	-	65	1116	32	20	-	393	-	190	225	-	82	-	-	-	77	394	30	60	1038	405	365	25
65	14	125	-	65	1195	32	20	-	393	-	190	225	-	82	-	-	-	77	394	30	60	1117	405	365	25
65	15	125	-	65	1274	32	20	-	393	-	190	225	-	82	-	-	-	77	394	30	60	1196	405	365	25
65	16	125	-	65	1353	32	20	-	393	-	190	225	-	82	-	-	-	77	394	30	60	1275	405	365	25
Material codes 10, 11, 12, 13, 14, 15, 16, 17, 20, 21, 22, 23, 25, 26, 27, 28, 30, 31 (RO), 33 (RO)																									
100	2	150	125	100	306	40	26	233	472	463	235	275	30	110	339	329	492	103	462	35	70	213	504	450	30
100	3	150	125	100	396	40	26	323	472	463	235	275	30	110	339	329	492	103	462	35	70	303	504	450	30
100	4	150	125	100	486	40	26	413	472	463	235	275	30	110	339	329	492	103	462	35	70	393	504	450	30
100	5	150	125	100	576	40	26	503	472	463	235	275	30	110	339	329	492	103	462	35	70	483	504	450	30
100	6	150	125	100	666	40	26	593	472	463	235	275	30	110	339	329	492	103	462	35	70	573	504	450	30
100	7	150	125	100	756	40	26	683	472	463	235	275	30	110	339	329	492	103	462	35	70	663	504	450	30
100	8	150	125	100	846	40	26	773	472	463	235	275	30	110	339	329	492	103	462	35	70	753	504	450	30
100	9	150	125	100	936	40	26	863	472	463	235	275	30	110	339	329	492	103	462	35	70	843	504	450	30
100	10	150	125	100	1026	40	26	953	472	463	235	275	30	110	339	329	492	103	462	35	70	933	504	450	30
100	11	150	125	100	1116	40	26	1043	472	463	235	275	30	110	339	329	492	103	462	35	70	1023	504	450	30
Material codes 10, 11, 12, 13, 14																									
125	2	200	150	125	393	50	26	292	488	478	300	325	10	110	355	345	488	111	464	22	94	306	320	250	30
125	3	200	150	125	505	50	26	404	488	478	300	325	10	110	355	345	488	111	464	22	94	418	320	250	30
125	4	200	150	125	617	50	26	516	488	478	300	325	10	110	355	345	488	111	464	22	94	530	320	250	30
125	5	200	150	125	729	50	26	628	488	478	300	325	10	110	355	345	488	111	464	22	94	642	320	250	30
125	6	200	150	125	841	50	26	740	488	478	300	325	10	110	355	345	488	111	464	22	94	754	320	250	30
125	7	200	150	125	953	50	26	852	488	478	300	325	10	110	355	345	488	111	464	22	94	866	320	250	30
125	8	200	150	125	1065	50	26	964	488	478	300	325	10	110	355	345	488	111	464	22	94	978	320	250	30
Material codes 15, 16, 17, 20, 21, 22, 23, 25, 26, 27, 28, 30, 31 (RO), 33 (RO)																									
125	2	200	150	125	393	50	30	292	488	478	300	325	38	110	355	345	512	136	490	45	90	255	605	561	50
125	3	200	150	125	505	50	30	404	488	478	300	325	38	110	355	345	512	136	490	45	90	367	605	561	50
125	4	200	150	125	617	50	30	516	488	478	300	325	38	110	355	345	512	136	490	45	90	479	605	561	50
125	5	200	150	125	729	50	30	628	488	478	300	325	38	110	355	345	512	136	490	45	90	591	605	561	50
125	6	200	150	125	841	50	30	740	488	478	300	325	38	110	355	345	512	136	490	45	90	703	605	561	50
125	7	200	150	125	953	50	30	852	488	478	300	325	38	110	355	345	512	136	490	45	90	815	605	561	50
125	8	200	150	125	1065	50	30	964	488	478	300	325	38	110	355	345	512	136	490	45	90	927	605	561	50
Material codes 10, 11, 12, 13, 14																									
150	2	250	200	150	452	60	34	338	594	578	350	400	22	140	426	411	600	137	567	30	104	342	350	265	30
150	3	250	200	150	584	60	34	470	594	578	350	400	22	140	426	411	600	137	567	30	104	474	350	265	30
150	4	250	200	150	716	60	34	602	594	578	350	400	22	140	426	411	600	137	567	30	104	606	350	265	30
150	5	250	200	150	848	60	34	734	594	578	350	400	22	140	426	411	600	137	567	30	104	738	350	265	30
150	6	250	200	150	980	60	34	866	594	578	350	400	22	140	426	411	600	137	567	30	104	870	350	265	30
Material codes 15, 16, 17, 20, 21, 22, 23, 25, 26, 30, 31 (RO), 33 (RO)																									
150	2	250	200	150	452	60	36	338	594	578	350	400	46	140	426	411	624	161	591	50	100	294	735	679	50
150	3	250	200	150	584	60	36	470	594	578	350	400	46	140	426	411	624	161	591	50	100	426	735	679	50
150	4	250	200	150	716	60	36	602	594	578	350	400	46	140	426	411	624	161	591	50	100	558	735	679	50
150	5	250	200	150	848	60	36	734	594	578	350	400	46	140	426	411	624	161	591	50	100	690	735	679	50
150	6	250	200	150	980	60	36	866	594	578	350	400	46	140	426	411	624	161	591	50	100	822	735	679	50
Material codes 10, 11, 12, 13, 14																									
150	7	250	200	150	1112	60	34	998	594	578	350	400	22	140	426	411	600	137	567	30	104	1002	350	265	30
Material codes 15, 16, 17, 20, 21, 22, 23, 25, 26, 30, 31 (RO), 33 (RO)																									
150	7	250	200	150	1112	60	36	998	594	578	350	400	46	140	426	411	624	161	591	50	100	954	735	679	50
Material codes 11, 12																									
200[44]	2	-	250	200	-	60	35	414	604	592	400	500	52	150	428	416	644	-	637	42	110	329	676	580	28,5
200[44]	3	-	250	200	-	60	35	574	604	592	400	500	52	150	428	416	644	-	637	42	110	489	676	580	28,5
200[44]	4	-	250	200	-	60	35	734	604	592	400	500	52	150	428	416	644	-	637	42	110	649	676	580	28,5
200[44]	5	-	250	200	-	60	35	894	604	592	400	500	52	150	428	416	644	-	637	42	110	809	676	580	28,5
200[44]	6	-	250	200	-	60	35	1054	604	592	400	500	52	150	428	416	644	-	637	42	110	969	676	580	28,5
Material codes 11, 12																									
250[44]	2	-	300	250	-	72	44	504,5	649,5	649	450	600	60	160	478	478	709	-	688,5	60	90	405,5	755	650	30
250[44]	3	-	300	250	-	72	44	694,5	649,5	649	450	600	60	160	478	478	709	-	688,5	60	90	595,5	755	650	30
250[44]	4	-	300	250	-	72	44	884,5	649,5	649	450	600	60	160	478	478	709	-	688,5	60	90	785,5	755	650	30
250[44]	5	-	300	250	-	72	44	1074,5	649,5	649	450	600	60	160	478	478	709	-	688,5	60	90	975,5	755	650	30

1777.5/12-EN

44 For installation types C / D only

Dimensions of Multitec E / F

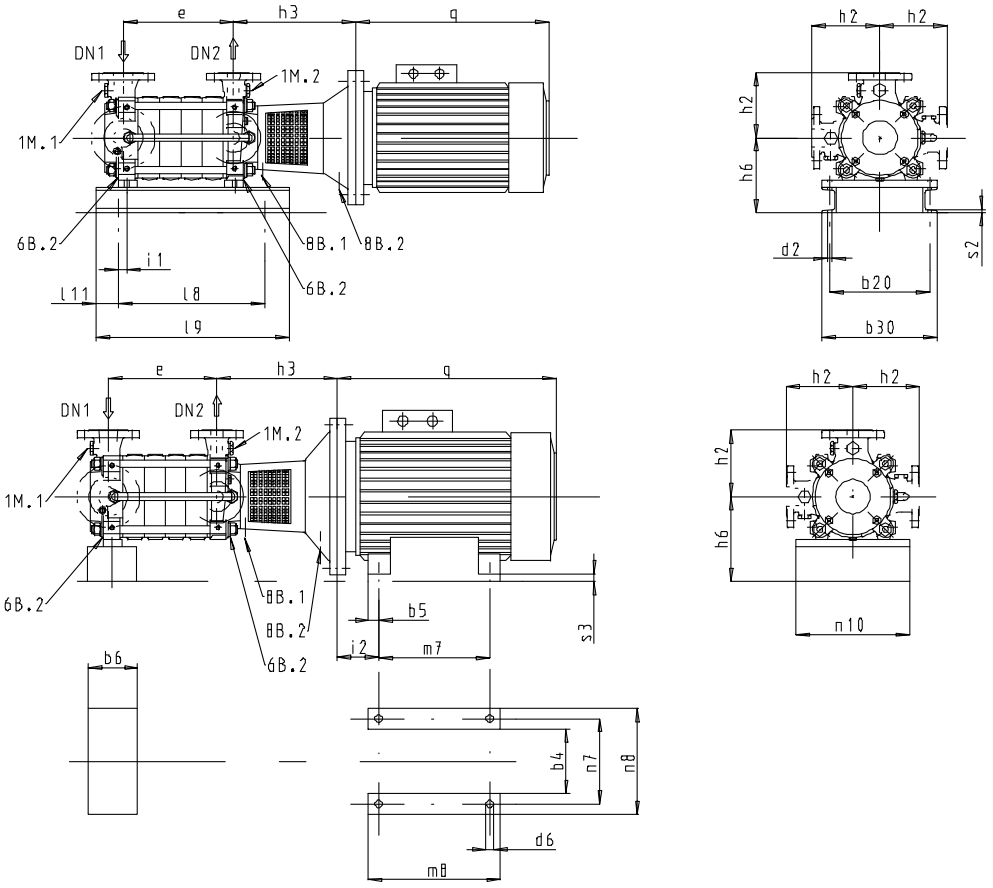

Fig. 6: Multitec E dimensions

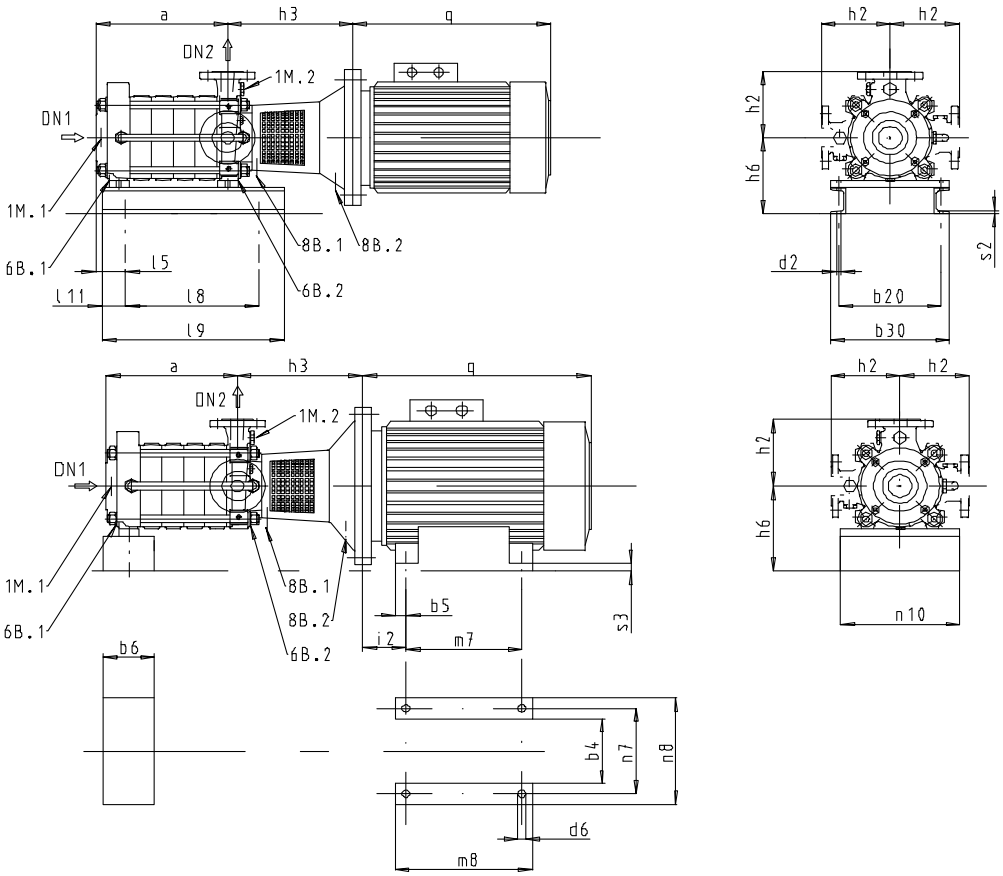

Fig. 7: Multitec F dimensions

1777.5/12-EN

Table 22: Connections

Connection	G = ISO 228/1	Multitec E			Multitec F		
	Rp = ISO 7/1	32	50	65	32	50	65
1M.1	G	1/2	1/2	1/2	-	-	1/2
1M.2	G	1/2	1/2	1/2	1/2	1/2	1/2
6B.1	G	1/4	1/4	1/2	-	-	1/4
6B.2	G	1/4	1/4	1/2	1/4	1/4	1/2
8B.1	Rp	3/8	3/8	3/8	3/8	3/8	3/8
8B.2	Rp	3/8	3/8	3/8	3/8	3/8	3/8

Table 23: Dimensions of Multitec E / F [mm]

Multitec E / F	Number of stages	DN_1		DN_2	a	b_{20}	b_{30}	d_2	e	h_2	i_1	l_5	l_8	l_9	l_{11}	n_{10}	s_2
		Axial	Radial														
32	2	65	50	32	168	290	330	18	121	175	9	56	150	580	60	330	6
32	3	65	50	32	223	290	330	18	176	175	9	56	150	580	60	330	6
32	4	65	50	32	278	290	330	18	231	175	9	56	300	650	60	330	6
32	5	65	50	32	333	290	330	18	286	175	9	56	300	650	60	330	6
32	6	65	50	32	388	290	330	18	341	175	9	56	355	700	60	330	6
32	7	65	50	32	443	290	330	18	396	175	9	56	410	760	60	330	6
50	2	100	80	50	190	290	330	18	151	200	18	57	150	580	60	330	6
50	3	100	80	50	252	290	330	18	213	200	18	57	150	580	60	330	6
50	4	100	80	50	314	290	330	18	275	200	18	57	300	650	60	330	6
50	5	100	80	50	376	290	330	18	337	200	18	57	355	700	60	330	6
50	6	100	80	50	438	290	330	18	399	200	18	57	410	760	60	330	6
65	2	125	100	65	247	365	405	18	189	225	18	77	200	760	60	405	6
65	3	125	100	65	326	365	405	18	268	225	18	77	270	900	60	405	6
65	4	125	100	65	405	365	405	18	347	225	18	77	350	1000	60	405	6

Table 24: Variable dimensions for motors IP55 with 2 or 4 poles (Multitec E / F 32-50-65, 50 Hz) [mm]

Type	[kW]	b_6	d_6	h_6 Multitec			i_2	m7	m_8	n_7	n_8 [45]	n_{10} [45]	s_3 [45]	2 poles						4 poles					
														IEC	Flange (FF)	h_3			q	IEC	Flange (FF)	h_3			q
				32	50	65										32	50	65				32	50	65	
V1	2,2	-	-	212	-	-	-	-	-	-	-	-	-	90L	215	-	-	-	-	100L	215	302	309	330	335
V1	3	-	-	212	-	-	-	-	-	-	-	-	-	100L	215	302	-	-	335	100L	215	302	309	330	335
V1	4	-	-	212	-	-	-	-	-	-	-	-	-	112M	215	302	-	-	329	112M	215	302	309	330	329
V1	5,5	-	-	212	230	-	-	-	-	-	-	-	-	132S	265	322	329	-	385	132S	265	322	329	350	385
V1	7,5	-	-	212	230	-	-	-	-	-	-	-	-	132S	265	322	329	-	385	132M	265	322	329	350	385
V1	11	-	-	212	230	270	-	-	-	-	-	-	-	160M	300	352	359	381	494	160M	300	352	359	381	494
V1	15	-	-	212	230	270	-	-	-	-	-	-	-	160M	300	352	359	381	494	160L	300	352	359	381	494
V1	18,5	-	-	212	230	270	-	-	-	-	-	-	-	160L	300	352	359	381	494	180M	300	-	359	381	558
V1	22	-	-	-	230	270	-	-	-	-	-	-	-	180M	300	-	359	381	558	-	-	-	-	-	-
V1	30	-	-	-	230	270	-	-	-	-	-	-	-	200L	350	-	362	381	611	-	-	-	-	-	-
V1	37	-	-	-	230	270	-	-	-	-	-	-	-	200L	350	-	362	381	611	-	-	-	-	-	-
B35	45	140	19	-	-	225	149	311	361	356	436	240	34	225M	400	-	-	384	708	-	-	-	-	-	-
B35	55	50	24	-	-	280	168	349	409	406	490	240	72	250M	500	-	-	414	747	-	-	-	-	-	-
B35	75	50	24	-	-	280	190	368	479	457	540	240	42	280S	500	-	-	414	820	-	-	-	-	-	-

1777.5/12-EN

45 For information purposes

Dimensions of Multitec V / Multitec-RO

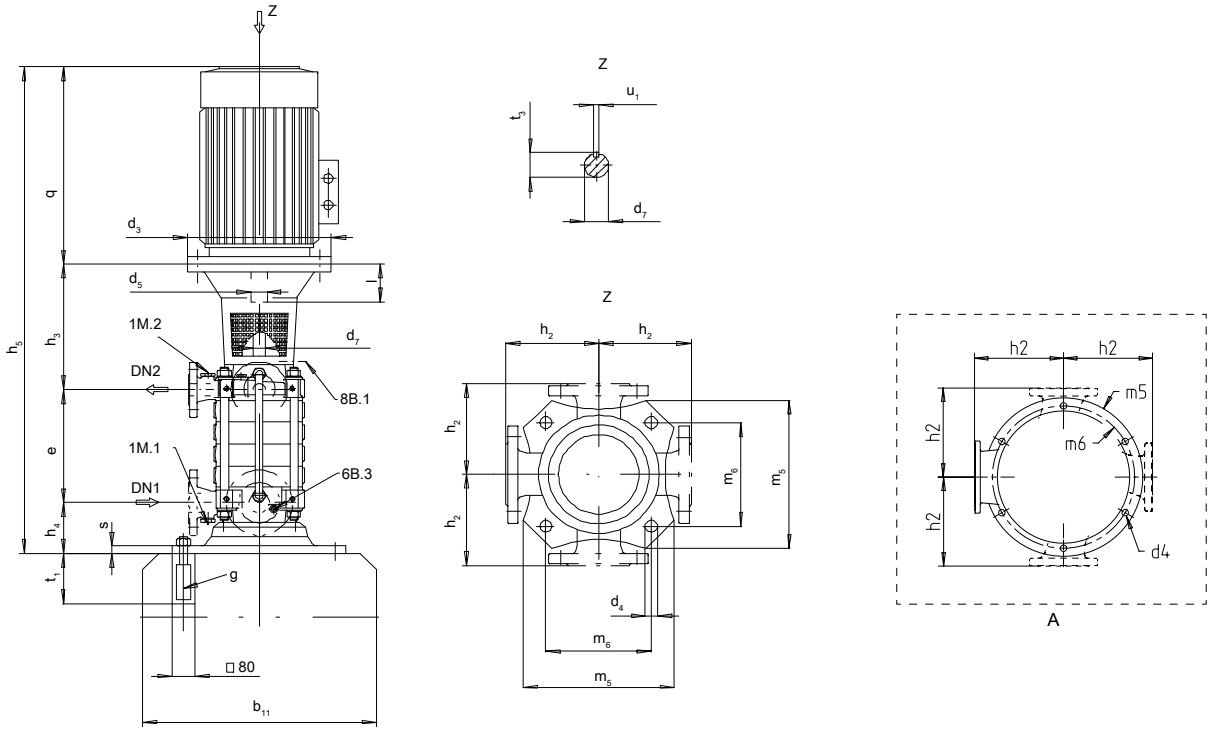

Fig. 8: Dimensions of Multitec V / Multitec-RO

A	For Multitec 200 only

Table 25: Connections

Connection	G = ISO 228/1	Multitec V						
	Rp = ISO 7/1	32	50	65	100	125	150	200
1M.1[46)]	G	1/2	1/2	1/2	1/2	1/2	1/2	1/2
1M.2[46)]	G	1/2	1/2	1/2	1/2	1/2	1/2	1/2
6B.3[46)]	G	1/4	1/4	1/2	1/2	1/2	1	1
8B	Rp	3/8	3/8	3/8	3/8	3/8	3/8	3/8

Table 26: Shaft dimensions [mm]

Multitec V	d_7	t_3	u_1
32	30	33	8
50	30	33	8
65	35	38	10
100	40	43	12
125	50	53,5	14
150	60	64	18

Table 27: Dimensions of Multitec V / Multitec-RO [mm]

Multitec V	Number of stages	DN_1	DN_2	b_{11}	d_4	e	g	h_2	h_4	m_5	m_6	s	t_1
32[46)]	2	50	32	490	18	121	M16×250 MU	175	129	345	266	20	250
32[46)]	3	50	32	490	18	176	M16×250 MU	175	129	345	266	20	250
32[46)]	4	50	32	490	18	231	M16×250 MU	175	129	345	266	20	250
32[46)]	5	50	32	490	18	286	M16×250 MU	175	129	345	266	20	250
32[46)]	6	50	32	490	18	341	M16×250 MU	175	129	345	266	20	250
32[46)]	7	50	32	490	18	396	M16×250 MU	175	129	345	266	20	250
32[46)]	8	50	32	490	18	451	M16×250 MU	175	129	345	266	20	250

46 Not for Multitec-RO

Multitec V	Number of stages	DN_1	DN_2	b_{11}	d_4	e	g	h_2	h_4	m_5	m_6	s	t_1
32[46)]	9	50	32	490	18	506	M16×250 MU	175	129	345	266	20	250
32[46)]	10	50	32	490	18	561	M16×250 MU	175	129	345	266	20	250
32[46)]	11	50	32	490	18	616	M16×250 MU	175	129	345	266	20	250
32[46)]	12	50	32	490	18	671	M16×250 MU	175	129	345	266	20	250
32[46)]	13	50	32	490	18	726	M16×250 MU	175	129	345	266	20	250
32[46)]	14	50	32	490	18	781	M16×250 MU	175	129	345	266	20	320
50	2	80	50	490	18	151	M16×320 MU	200	136	345	266	20	320
50	3	80	50	490	18	213	M16×320 MU	200	136	345	266	20	320
50	4	80	50	490	18	275	M16×320 MU	200	136	345	266	20	320
50	5	80	50	490	18	337	M16×320 MU	200	136	345	266	20	320
50	6	80	50	490	18	399	M16×320 MU	200	136	345	266	20	320
50	7	80	50	490	18	461	M16×320 MU	200	136	345	266	20	320
50	8	80	50	490	18	523	M16×320 MU	200	136	345	266	20	320
50	9	80	50	490	18	585	M16×320 MU	200	136	345	266	20	320
50	10	80	50	490	18	647	M16×320 MU	200	136	345	266	20	320
50	11	80	50	490	18	709	M16×320 MU	200	136	345	266	20	320
50	12	80	50	490	18	771	M16×320 MU	200	136	345	266	20	320
50	13	80	50	490	18	833	M16×320 MU	200	136	345	266	20	320
50	14	80	50	490	18	895	M16×320 MU	200	136	345	266	20	320
50	15	80	50	490	18	957	M16×320 MU	200	136	345	266	20	320
65	2	100	65	540	18	189	M16×320 MU	225	170	400	304	22	320
65	3	100	65	540	18	268	M16×320 MU	225	170	400	304	22	320
65	4	100	65	540	18	347	M16×320 MU	225	170	400	304	22	320
65	5	100	65	540	18	426	M16×320 MU	225	170	400	304	22	320
65	6	100	65	540	18	505	M16×320 MU	225	170	400	304	22	320
65	7	100	65	540	18	584	M16×320 MU	225	170	400	304	22	320
65	8	100	65	540	18	663	M16×320 MU	225	170	400	304	22	320
65	9	100	65	540	18	742	M16×320 MU	225	170	400	304	22	320
65	10	100	65	540	18	821	M16×320 MU	225	170	400	304	22	320
65	11	100	65	540	18	900	M16×320 MU	225	170	400	304	22	320
100	2	125	100	690	33	233	M30×400 MU	275	212	545	405	30	400
100	3	125	100	690	33	323	M30×400 MU	275	212	545	405	30	400
100	4	125	100	690	33	413	M30×400 MU	275	212	545	405	30	400
100	5	125	100	690	33	503	M30×400 MU	275	212	545	405	30	400
100	6	125	100	690	33	593	M30×400 MU	275	212	545	405	30	400
100	7	125	100	690	33	683	M30×400 MU	275	212	545	405	30	400
100	8	125	100	690	33	773	M30×400 MU	275	212	545	405	30	400
100	9	125	100	690	33	863	M30×400 MU	275	212	545	405	30	400
100	10	125	100	690	33	953	M30×400 MU	275	212	545	405	30	400
100	11	125	100	690	33	1043	M30×400 MU	275	212	545	405	30	400
125	2	150	125	690	33	292	M30×400 MU	325	227	545	405	30	400
125	3	150	125	690	33	404	M30×400 MU	325	227	545	405	30	400
125	4	150	125	690	33	516	M30×400 MU	325	227	545	405	30	400
125	5	150	125	690	33	628	M30×400 MU	325	227	545	405	30	400
125	6	150	125	690	33	740	M30×400 MU	325	227	545	405	30	400
125	7	150	125	690	33	852	M30×400 MU	325	227	545	405	30	400
125	8	150	125	690	33	964	M30×400 MU	325	227	545	405	30	400
150	2	200	150	750	33	338	M30×400 MU	400	250	600	430	30	400
150	3	200	150	750	33	470	M30×400 MU	400	250	600	430	30	400
150	4	200	150	750	33	602	M30×400 MU	400	250	600	430	30	400
150	5	200	150	750	33	734	M30×400 MU	400	250	600	430	30	400
150	6	200	150	750	33	866	M30×400 MU	400	250	600	430	30	400
150	7	200	150	750	33	988	M30×400 MU	400	250	600	430	30	400
200	2	250	200	1300	6×Ø36×60°	414	M30×400 MU	500	300	800	890	25	400
200	3	250	200	1300	6×Ø36×60°	574	M30×400 MU	500	300	800	890	25	400

1777.5/12-EN

Multitec V	Number of stages	DN_1	DN_2	b_{11}	d_4	e	g	h_2	h_4	m_5	m_6	s	t_1
200	4	250	200	1300	6×Ø36×60°	734	M30×400 MU	500	300	800	890	25	400
200	5	250	200	1300	6×Ø36×60°	894	M30×400 MU	500	300	800	890	25	400
200	6	250	200	1300	6×Ø36×60°	1054	M30×400 MU	500	300	800	890	25	400

Table 28: Variable dimensions for motors IP55 with 2 or 4 poles (Multitec V, 50 Hz) [mm]

Multitec V	q	h_5	IP55																		
			50 Hz/60 Hz						h_3												
			2 poles			4 poles			2 poles						4 poles						
[kW]			d_3	d_5	l	d_3	d_5	l	32	50	65	100	125	150	32	50	65	100	125	150	200
2,2	47)	47)	-	-	-	250	28	60	-	-	-	-	-	-	302	309	331	-	-	-	-
3,0			250	28	60	250	28	60	302	-	-	-	-	-	302	309	331	-	-	-	-
4,0			250	28	60	250	28	60	302	309	-	-	-	-	302	309	331	-	-	-	-
5,5			300	38	80	300	38	80	322	329	-	-	-	-	322	329	351	-	-	-	-
7,5			300	38	80	300	38	80	322	329	351	-	-	-	322	329	351	-	-	-	-
11,0			350	42	110	350	42	110	352	359	381	-	-	-	352	359	381	585	601	-	-
15,0			350	42	110	350	42	110	352	359	381	-	-	-	352	359	381	585	601	-	-
18,5			350	42	110	350	48	110	352	359	381	-	-	-	-	359	381	585	601	-	-
22,0			350	48	110	350	48	110	352	359	381	585	-	-	-	359	381	585	601	-	-
30,0			400	55	110	400	55	110	355	362	381	585	-	-	-	362	381	585	601	-	-
37,0			400	55	110	450	60	140	355	362	381	585	-	-	-	-	414	615	631	-	-
45,0			450	55	110	450	60	140	355	362	384	615	-	-	-	-	414	615	631	-	-
55,0			550	60	140	550	65	140	-	392	414	617	-	-	-	-	414	617	633	740	-
75,0			550	65	140	550	75	140	-	392	414	617	-	-	-	-	-	617	633	740	735
90,0			550	65	140	550	75	140	-	392	414	617	633	-	-	-	-	617	633	740	735
110,0			660	65	140	660	80	170	-	-	444	647	663	-	-	-	-	647	663	770	765
132,0			660	65	140	660	80	170	-	-	444	647	663	-	-	-	-	-	663	770	765
160,0			660	65	140	660	80	170	-	-	-	647	663	-	-	-	-	-	663	770	765
200,0			660	70	140	660	80	170	-	-	-	-	-	-	-	-	-	-	-	770	765

Flange design (standard)

Table 29: Flange designs (standard)

Material variant	Maximum permissible discharge pressure	Flanges drilled to EN			Flanges drilled to ASME Class	
		Standard	Suction flange	Discharge flange	Suction flange	Discharge flange
	[bar]		PN	PN		
10	-	EN 1092-2	16	40	125 RF	250 RF
11	-	EN 1092-2	16	40	125 RF	250 RF
12	-	EN 1092-2	16	40	125 RF	250 RF
13	-	EN 1092-2	16	40	125 RF	250 RF
14	-	EN 1092-2	16	40	125 RF	250 RF
15	-	EN 1092-1	25	63	300 RF	600 RF[48)]
16	-	EN 1092-1	25	63	300 RF	600 RF[48)]
17	-	EN 1092-1	25	63	300 RF	600 RF[48)]
20	-	EN 1092-1	25	63	300 RF	600 RF[48)]
21	-	EN 1092-1	25	63	300 RF	600 RF[48)]
22	-	EN 1092-1	25	63	300 RF	600 RF[48)]
23	-	EN 1092-1	25	63	300 RF	600 RF[48)]
25	-	EN 1092-1	25	63	300 RF	600 RF[48)]
26	-	EN 1092-1	25	63	300 RF	600 RF[48)]

47 Depending on the make
48 For size 32: Discharge flange DN 1 1/4 also available with DN 1 1/2 on request

Material variant	Maximum permissible discharge pressure	Flanges drilled to EN			Flanges drilled to ASME Class	
		Standard	Suction flange	Discharge flange	Suction flange	Discharge flange
	[bar]		PN	PN		
27	-	EN 1092-1	25	100[49)]	300 RF	600 RF
28[49)]	-	EN 1092-1	40	100	300 RF	600 RF
30	-	EN 1092-1	25	63	300 RF	600 RF[48)]
31 (RO)/33 (RO)	63	EN 1092-1	25	63	300 RF	600 RF
	80/100	EN 1092-1	25	100[49)]		

1777.5/12-EN

49 For Multitec 100 and 125 only

Nozzle positions

The nozzle position is variable. The required nozzle position has to be selected when completing an order in the selection program.

For all pump sizes and material variants nozzle position 0-0 (or illustration 2 for vertical installations) is only available for versions with three or more stages.
Exceptions are MTC 150, MTC 200 and MTC 250 in material codes 10, 11, 12, 13 and 14: here nozzle position 0-0 is available for versions with two or more stages. The nozzle position is generally defined seen from the drive.

Horizontal installation (A, B, C, D, E and F)

The first letter defines the suction nozzle, the second letter the discharge nozzle.

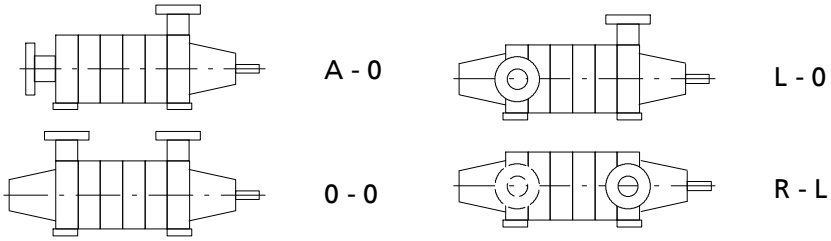

A	Axial suction nozzle
0	Suction nozzle and/or discharge nozzle on top
R	Suction nozzle and/or discharge nozzle on the right
L	Suction nozzle and/or discharge nozzle on the left

Vertical installation

The suction nozzle (at the bottom) serves as a fixed point. The illustration number indicates the offset position of the discharge nozzle compared to the suction nozzle.

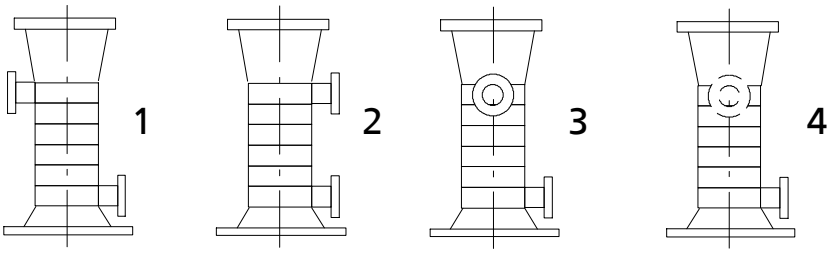

1	Offset by 180°
2	Aligned
3	90° offset to the left
4	90° offset to the right

General assembly drawing with list of components (example)

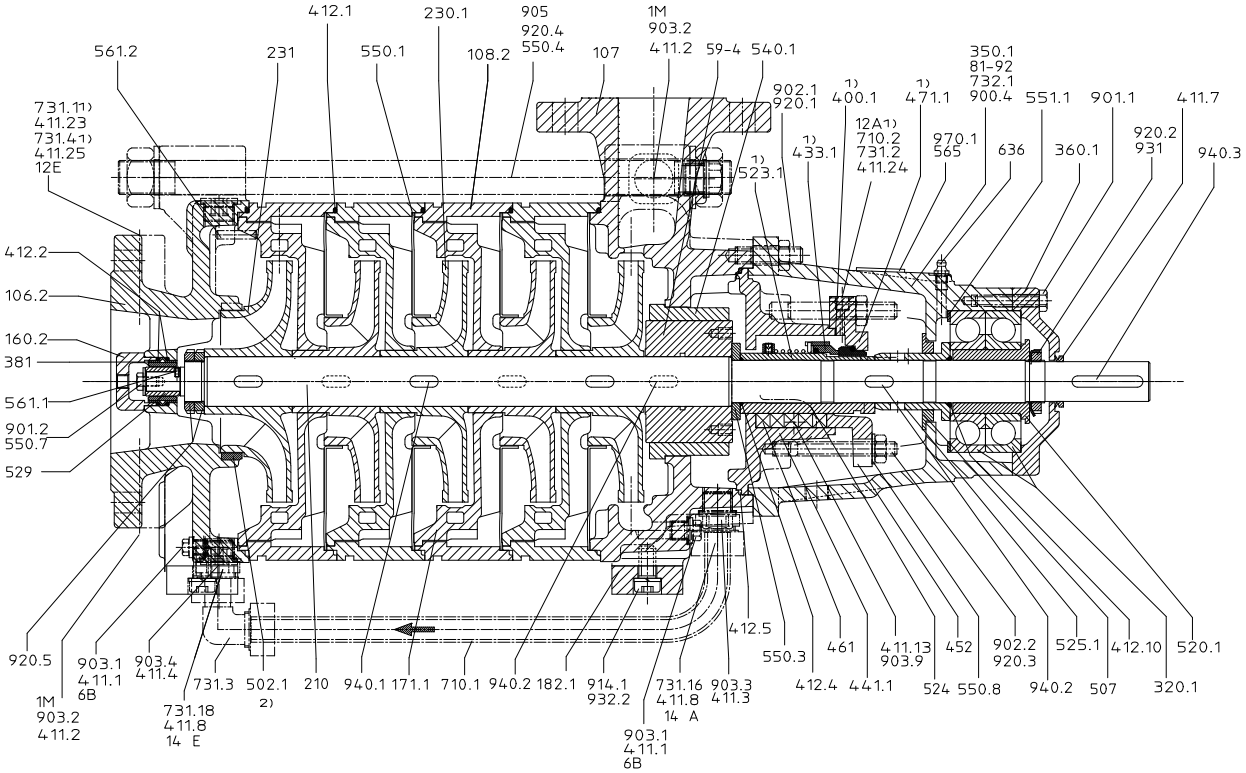

Fig. 9: Multitec, installation type A, size 65-100

List of components

Table 30: List of components

Part No.	Part description	Part No.	Part description
106.2	Suction casing	525.1	Spacer sleeve
107	Discharge casing	529	Bearing sleeve SiC
108.2	Stage casing	540.1	Bush
160.2	Cover	550.1	Sheet metal disc
171.1	Diffuser	550.3/.4/.7/.8	Disc
182.1	Foot	551.1	Spacer disc
210	Shaft	561.1/.2	Grooved pin
230.1	Impeller	565	Rivet
231	Suction stage impeller	59-4	Balance drum
320.1	Rolling element bearing	636	Lubricating nipple
350.1	Bearing housing	710.1/.2	Pipe
360.1	Bearing cover	731.1/.2/.3/.4/.16/.18	Pipe union
381	Bearing cartridge	732.1	Bracket
400.1	Gasket	81-92	Cover plate
411.1/.2/.3/.4/.7/.8/.13/.23/.24/.25	Joint ring	900.4	Screw
412.1/.2/.4/.5/.10	O-ring	901.1/.2	Hexagon head bolt
433.1	Mechanical seal	902.1/.2	Stud
441.1	Shaft seal housing	903.1/.2/.3/.4/.9	Screw plug
452	Gland follower	905	Tie bolt
461	Gland packing	914.1	Hexagon socket head cap screw
471.1	Seal cover	920.1/.2/.3/.4/.5	Nut
502.1	Casing wear ring	931	Lock washer
507	Thrower	932.2	Circlip
520.1	Sleeve	940.1/.2/.3	Key
523.1	Shaft sleeve	970.1	Label/plate
524	Shaft protecting sleeve		

10/08/2021

1777.5/12-EN

LENNTECH
WATER TREATMENT SOLUTIONS
info@lenntech.com Tel. +31-152-610-900
www.lenntech.com Fax. +31-152-616-289

KSB