LENNTECH
WATER TREATMENT SOLUTIONS

Axially Split Volute Casing Pump

Omega / Omega V

Type Series Booklet

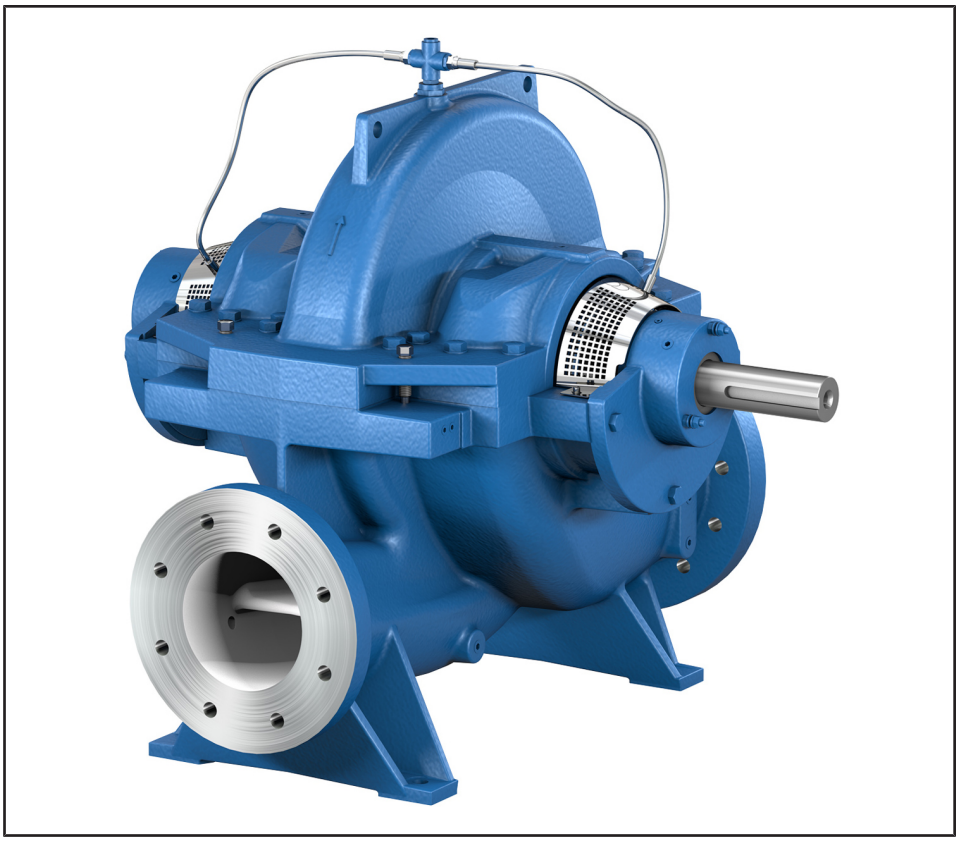

KSB

Legal information/Copyright

Type Series Booklet Omega / Omega V

All rights reserved. The contents provided herein must neither be distributed, copied, reproduced, edited or processed for any other purpose, nor otherwise transmitted, published or made available to a third party without the manufacturer's express written consent.

Subject to technical modification without prior notice.

© KSB SE & Co. KGaA, Frankenthal 2024-03-26

Contents

Water Supply **4**
Axially Split Volute Casing Pump 4
Omega / Omega V 4
Main applications 4
Fluids handled 4
Operating data 4
Designation 4
Design details 4
Materials 6
Coating and preservation 8
Product benefits 9
Acceptance inspections/tests 9
Selection information 10
Overview of product features / selection tables 11
Related documents 16
Specifications required for enquiries/orders 17
Selection charts 18
Types of installation 20
Scope of supply 23
General assembly drawing with list of components 24

Water Supply

Axially Split Volute Casing Pump

Omega / Omega V

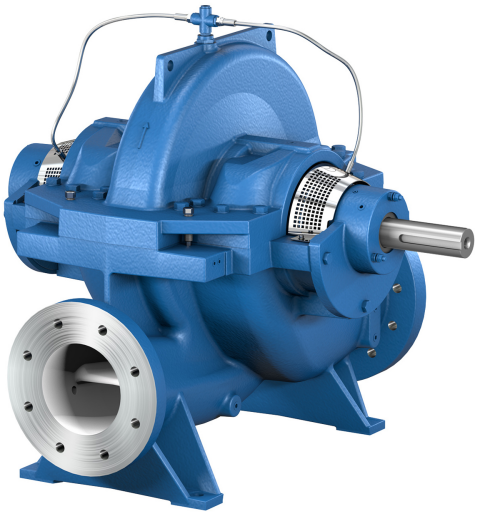

Main applications

- Waterworks
- Desalination plants
- Pressure boosting
- Water transport
- Service water and cooling water for power stations and industry
- Irrigation pumping stations
- Drainage pumping stations
- Fire-fighting systems
- Shipbuilding
- District heating systems and district cooling systems

Fluids handled

OMEGA / OMEGA V pumps are designed for pumping water and other fluids with a low solids content. The pumps are very versatile and can be used for the following fluids, for example:

- Brackish water
- River water, lake water and groundwater
- Stormwater
- Service water
- Fire-fighting water
- Cooling water
- Condensate
- Heating water
- Drinking water

Operating data

Table 1: Operating properties

Characteristic		Value
Size	DN [mm]	80-400
	DN [″]	3-15
Flow rate[1)]	Q [m³/h]	≤ 4400
	Q [US.gpm]	≤ 19375
Head[2)]	H [m]	≤ 210
	H [ft]	≤ 689
Operating pressure[2)]	p [bar]	≤ 25
	p [psi]	≤ 363
Fluid temperature[3)]	T [°C]	0 to 140
	T [°F]	32 to 284

Designation

Example: Omega V 150 - 460 A GB P M

Table 2: Designation key

Code	Description	
Omega	Type series	
V	Design	
	[4)]	Horizontal installation
	V	Vertical installation
150	Nominal discharge nozzle diameter [mm]	
460	Nominal impeller diameter [mm]	
A	Impeller type	
GB	Material variant (⇨ Page 6)	
	GB	Grey cast iron / bronze
	GC	Grey cast iron / chrome steel
	SB	Nodular cast iron / bronze
	SC	Nodular cast iron / chrome steel
	DD_{35}	Duplex stainless steel / duplex stainless steel
P	Shaft seal	
	P	Gland packing
	G	Mechanical seal
M	Bearing lubrication	
	F	Grease
	M	Fluid handled

Design details

Design

- Volute casing pump
- Horizontal installation / vertical installation
- Single-stage
- Nominal discharge nozzle diameter: 80 mm - 400 mm

1384.5/14-EN

1 For larger flow rates see type series RDLO / RDLOV
2 Depending on the material and size
3 Standard design up to 80 °C [176 °F] max.
4 Blank

Pump casing

- Axially split volute casing
- Volute casing with integrally cast pump feet
- Replaceable casing wear rings
- Mating dimensions to EN or ASME

Impeller type

- Double-entry radial impeller[5)]

Pump shaft

- Completely dry shaft
- Shaft protecting sleeves in the seal area

Shaft seal

- Gland packing
- Mechanical seal

Bearings

For horizontal installation:

- Grease-packed rolling element bearings sealed for life

For vertical installation:

- Product-lubricated plain bearing at the bottom / rolling element bearings, greased for life, on top

1384.5/14-EN

5 Optionally with impeller wear rings

Materials

Table 3: Overview of available materials (standard design)[6)]

Part No.	Part description	Material variant				
		GB	GC	SB	SC	DD_{35} [7)]
All pump sets						
102	Volute casing	Grey cast iron	Grey cast iron	Nodular cast iron	Nodular cast iron	Duplex stainless steel
211	Pump shaft	Stainless steel	Stainless steel	Stainless steel	Stainless steel	Duplex stainless steel
234	Impeller	Bronze	Stainless steel	Bronze	Stainless steel	Duplex stainless steel
350.1	Bearing housing	Grey cast iron	Grey cast iron	Grey cast iron	Grey cast iron	Grey cast iron
360	Bearing cover	Grey cast iron	Grey cast iron	Grey cast iron	Grey cast iron	Grey cast iron
441	Shaft seal housing	Grey cast iron	Grey cast iron	Nodular cast iron	Nodular cast iron	Duplex stainless steel
502	Casing wear ring	Bronze	Bronze	Bronze	Bronze	Duplex stainless steel
503	Impeller wear ring (optional)	Bronze	Stainless steel	Bronze	Stainless steel	Duplex stainless steel
524.1	Shaft protecting sleeve	Stainless steel	Stainless steel	Stainless steel	Stainless steel	Duplex stainless steel
For pump sets with product-lubricated plain bearing only						
160	Cover	Grey cast iron	Grey cast iron	Nodular cast iron	Nodular cast iron	Duplex stainless steel
350.2	Bearing housing	Grey cast iron	Grey cast iron	Nodular cast iron	Nodular cast iron	Duplex stainless steel
545	Bearing bush	Silicon carbide	Silicon carbide	Silicon carbide	Silicon carbide	Silicon carbide
524.2	Shaft protecting sleeve	Silicon carbide	Silicon carbide	Silicon carbide	Silicon carbide	Silicon carbide
550.3	Disc	Stainless steel	Stainless steel	Stainless steel	Stainless steel	Duplex stainless steel
525.1	Spacer sleeve	Stainless steel	Stainless steel	Stainless steel	Stainless steel	Duplex stainless steel
For pump sets with gland packing only						
452	Gland follower	Unalloyed steel	Unalloyed steel	Unalloyed steel	Unalloyed steel	-
455	Stuffing box insert	Bronze	Bronze	Bronze	Bronze	-
457	Neck ring	Bronze	Bronze	Bronze	Bronze	-
458	Lantern ring	Bronze/ thermosetting plastics[8)]	Bronze/ thermosetting plastics[8)]	Bronze/ thermosetting plastics[8)]	Bronze/ thermosetting plastics[8)]	-
461	Packing ring	Ramie fibre PTFE-impregnated	Ramie fibre PTFE-impregnated	Ramie fibre PTFE-impregnated	Ramie fibre PTFE-impregnated	-
For pump sets with mechanical seal only						
433	Balanced mechanical seal	Carbon/ silicon carbide	Carbon/ silicon carbide	Carbon/ silicon carbide	Carbon/ silicon carbide	Carbon/ silicon carbide
433	Unbalanced mechanical seal	Silicon carbide / silicon carbide	Silicon carbide / silicon carbide	Silicon carbide / silicon carbide	Silicon carbide / silicon carbide	Silicon carbide / silicon carbide
457.2	Neck ring	Bronze	Bronze	Bronze	Bronze	Duplex stainless steel
471	Seal cover	Grey cast iron	Grey cast iron	Grey cast iron	Grey cast iron	Duplex stainless steel
525.2	Spacer sleeve[9)]	Stainless steel	Stainless steel	Stainless steel	Stainless steel	Duplex stainless steel

1384.5/14-EN

6 Max. fluid temperatures ≤ 80 °C [176 °F]
7 For duplex stainless steel with special PREN values contact the manufacturer.
8 For OMEGA only: 80-210 / 80-270 / 80-370 / 100-250 / 100-310 / 100-375
9 Not for versions with KSB mechanical seal 4OM

Table 4: Overview of available materials (hot water variant)

Part No.	Part description	Material variant				
		GB	GC[10)]	SB	SC[11)]	DD_{35}
All pump sets						
102	Volute casing	-	Grey cast iron	-	Nodular cast iron	-
211	Pump shaft	-	Stainless steel	-	Stainless steel	-
234	Impeller	-	Stainless steel	-	Stainless steel	-
350.1	Bearing housing	-	Grey cast iron	-	Grey cast iron	-
360	Bearing cover	-	Grey cast iron	-	Grey cast iron	-
441	Shaft seal housing	-	Grey cast iron	-	Nodular cast iron	-
502	Casing wear ring	-	Stainless steel	-	Stainless steel	-
503	Impeller wear ring (optional)	-	-	-	-	-
524.1	Shaft protecting sleeve	-	Stainless steel	-	Stainless steel	-
For pump sets with product-lubricated plain bearing only						
160	Cover	-	-	-	-	-
350.2	Bearing housing	-	-	-	-	-
545	Bearing bush	-	-	-	-	-
524.2	Shaft protecting sleeve	-	-	-	-	-
550.3	Disc	-	-	-	-	-
525.1	Spacer sleeve	-	-	-	-	-
For pump sets with gland packing only						
452	Gland follower	-	-	-	-	-
455	Stuffing box insert	-	-	-	-	-
457	Neck ring	-	-	-	-	-
458	Lantern ring	-	-	-	-	-
461	Packing ring	-	-	-	-	-
For pump sets with mechanical seal only						
433	Balanced mechanical seal[10)]	-	Silicon carbide / carbon	-	Silicon carbide / carbon	-
433	Unbalanced mechanical seal[10)]	-	-	-	-	-
457.2	Neck ring	-	Stainless steel	-	Stainless steel	-
471	Seal cover	-	Grey cast iron	-	Grey cast iron	-
525.2	Spacer sleeve[9)]	-	Stainless steel	-	Stainless steel	-

10 Only permissible for fluid temperatures ≤ 120 °C [248 °F]
11 Only permissible for fluid temperatures ≤ 140 °C [284 °F]

Coating and preservation

Table 5: Coating for indoor installation

Coating type	Material variant					Casing			Base frame
	GB	GC	SB	SC	DD_{35}	Exterior	Interior	Bearing housing	
A1[12]	✗	✗	✗	✗	–	Epoxy resin base paint, colour RAL 5002 (ultramarine blue)[13]	Epoxy resin base primer, colour at our discretion	Epoxy resin base paint,colour RAL 5002 (ultramarine blue)[13]	Epoxy resin base paint,colour RAL 5002 (ultramarine blue)[13]
A1-E[12][14]	✗	✗	✗	✗	–	Epoxy resin base paint, colour RAL 5002 (ultramarine blue)[13]	Epoxy resin base paint, colour RAL 5015 (sky blue)[15]	Epoxy resin base paint, colour RAL 5002 (ultramarine blue)[13]	Epoxy resin base paint,colour RAL 5002 (ultramarine blue)[13]
B1-E[12]	–	–	–	–	✗	Epoxy resin base paint, colour RAL 5002 (ultramarine blue)[13]	None; sand-blasted SA 2 ½	Epoxy resin base paint, colour RAL 5002 (ultramarine blue)[13]	Epoxy resin base paint,colour RAL 5002 (ultramarine blue)[13]

Table 6: Coating for outdoor installation

Coating type	Material variant					Casing			Base frame
	GB	GC	SB	SC	DD_{35}	Exterior	Interior	Bearing housing	
A2	✗	✗	✗	✗	–	Polyurethane base paint, colour RAL 5002 (ultramarine blue)[16]	Epoxy resin base primer, colour at our discretion	Polyurethane base paint, colour RAL 5002 (ultramarine blue)[16]	Polyurethane base paint, colour RAL 5002 (ultramarine blue)[16]
A2-E[12][14]	✗	✗	✗	✗	–	Polyurethane base paint, colour RAL 5002 (ultramarine blue)[16]	Epoxy resin base paint, colour RAL 5015 (sky blue)[15]	Polyurethane base paint, colour RAL 5002 (ultramarine blue)[16]	Polyurethane base paint, colour RAL 5002 (ultramarine blue)[16]
B2-E[12]	–	–	–	–	✗	Polyurethane base paint, colour RAL 5002 (ultramarine blue)[16]	None; sand-blasted SA 2 ½	Polyurethane base paint, colour RAL 5002 (ultramarine blue)[16]	Polyurethane base paint, colour RAL 5002 (ultramarine blue)[16]

12 Only permissible for fluid temperatures ≤ 80 °C [176 °F]

13 For indoor use in industry and in a marine atmosphere; other colours only in coating variants A2, B2 and on request.

14 Extra charge

15 Approved for drinking water (KTW, DVGW, ACS). The impeller and rotor components are not coated. No other colours available. Max. permissible temperature for drinking water approved coating 60 °C [140 °F]. Only approved for drinking water up to 25 °C [77 °F] max.

16 For indoor use and outdoor use in industry and in a marine atmosphere; other colours are available on request.

Product benefits

- Low maintenance costs:
  - Fast and easy to install thanks to self-centring components (upper casing part, rotor, casing cover)
  - Materials resistant to corrosion and abrasion
  - Smooth operation with low vibration levels
  - Replacement and spare parts fit several pump sizes
- Long service life:
  - Sealed and dry shaft
  - Short bearing distances and a short shaft
  - Optional impeller wear rings
  - Replaceable shaft protecting sleeve
- High operating reliability:
  - Rigid shaft without threads between the bearings
  - Generously sized bearings (Lh_{10} = 100,000 hours)
  - Reliable sealing thanks to solid casing split flange
  - Double-entry impeller for axial thrust balancing
  - Double volute design
- High flexibility:
  - Drive can be positioned to the left or right of the pump
  - Shaft sealed by gland packing or mechanical seals
  - Various horizontal and vertical installation options
  - Flanges to DIN or ASME
- Excellent efficiencies and NPSH values:
  - Computer-optimised impellers
  - Large impeller inlet diameters for optimum suction behaviour
  - Cost-effective replacing of casing and impeller wear rings
  - Vortex-free intake elbow with low energy losses
  - Impeller trimmed to match the specified duty point
  - Several hydraulic systems per pump size

Acceptance inspections/tests

- Functional and acceptance tests
  - For information on acceptance tests and inspections refer to the QCPs (see KSB Standard ZN56555-1A / ZN56555-1B / ZN56555-1C)
- Quality assurance system
  - DIN ISO 9001 / EN 29001

1384.5/14-EN

Selection information

Solids content

Table 7: Solids content by shaft seal and material variant in [ppm] or [mg/l]

Shaft seal	Material variant					
	Max. permissible solids content for variants with barrier and flushing water line without cyclone separator			Max. permissible solids content for variants with barrier and flushing water line with cyclone separator[17]		
	Grey cast iron (GB/GC)	Nodular cast iron (SB/SC)	Cast steel (DD_{35})	Grey cast iron (GB/GC)	Nodular cast iron (SB/SC)	Cast steel (DD_{35})
Gland packing	50	50	50	100	100	100
Unbalanced mechanical seal	50	50	50	100	100	100
Balanced mechanical seal	50	50	50	100	100	100

Directions of rotation and flow

Table 8: Directions of rotation and flow

Horizontal installation		Vertical installation	
Direction of rotation when looking at the shaft stub **"left"**= anti-clockwise	Direction of rotation when looking at the shaft stub **"right"**= clockwise	Direction of rotation when looking at the shaft stub **"left"**= anti-clockwise	Direction of rotation when looking at the shaft stub **"right"**= clockwise
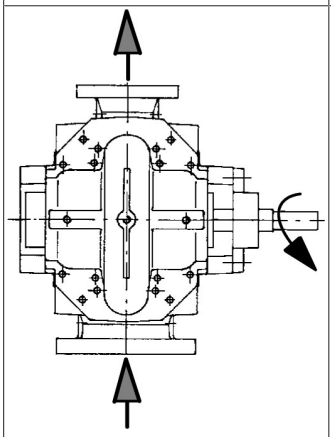	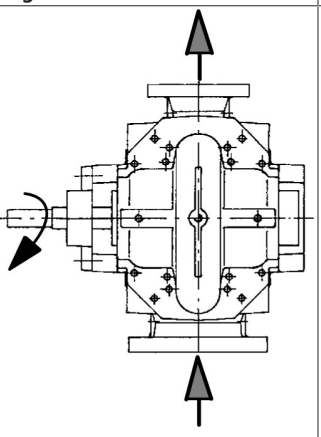	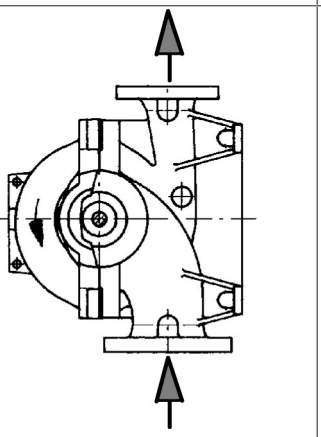	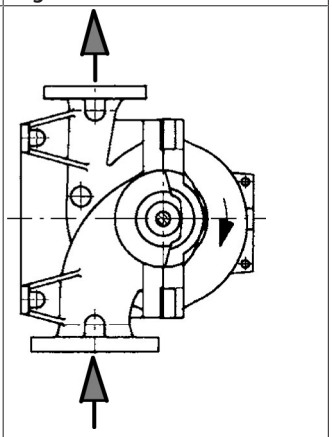

The pumps are designed symmetrically, which means that the designs for clockwise and anti-clockwise rotation are identical. The direction of rotation can be reversed at a later stage without retrofitting or modifying components.

1384.5/14-EN

17 Higher solids contents on request

Overview of product features / selection tables

Standard design

Table 9: Overview of product features of the standard design[18)]

Features		Material variant					Installation type				
							Omega		Omega V		
		GB	GC	SB	SC	DD_{35}	Fig.0	3E	DB/DK	DP	DJ
Acceptance inspections/tests[19)]											
Hydraulic acceptance test to KSB standard DIN ISO 9906 - 2B (equivalent to ANSI HI 14.6-2011/2B)	Non-witnessed	■	■	■	■	■	■	■	■	■	■
	Witnessed	○	○	○	○	○	○	○	○	○	○
Hydraulic acceptance test to DIN ISO 9906 - 1B (equivalent to ANSI HI 14.6-2011/1B)	Non-witnessed	■	■	■	■	■	■	■	■	■	■
	Witnessed	○	○	○	○	○	○	○	○	○	○
Hydraulic acceptance test to DIN ISO 9906 - 1U (equivalent to ANSI HI 14.6-2011/1U or Hydraulic Institute A)	Non-witnessed	■	■	■	■	■	■	■	■	■	■
	Witnessed	○	○	○	○	○	○	○	○	○	○
NPSH test (to DIN ISO 9906 or Hydraulic Institute)	Non-witnessed	■	■	■	■	■	■	■	■	■	■
	Witnessed	○	○	○	○	○	○	○	○	○	○
Sound measurement	Non-witnessed	■	■	■	■	■	■	■	■	■	■
	Witnessed	○	○	○	○	○	○	○	○	○	○
Vibration test	Non-witnessed	■	■	■	■	■	■	■	■	■	■
	Witnessed	○	○	○	○	○	○	○	○	○	○
Bearing temperature measurement	Non-witnessed	○	○	○	○	○	○	○	○	○	○
	Witnessed	○	○	○	○	○	○	○	○	○	○
Visual inspection after test run (strip test)	Non-witnessed	■	■	■	■	■	■	■	■	■	■
	Witnessed	○	○	○	○	○	○	○	○	○	○
Hydrostatic test	Non-witnessed	■	■	■	■	■	■	■	■	■	■
	Witnessed	○	○	○	○	○	○	○	○	○	○
Impeller balancing test	Non-witnessed	○	○	○	○	○	○	○	○	○	○
	Witnessed	○	○	○	○	○	○	○	○	○	○
Coating inspection	Non-witnessed	○	○	○	○	○	○	○	○	○	○
	Witnessed	○	○	○	○	○	○	○	○	○	○
Dimensional inspection	Non-witnessed	○	○	○	○	○	○	○	○	○	○
	Witnessed	○	○	○	○	○	○	○	○	○	○
Coating											
Coating for indoor installation (KSB blue / RAL 5002)		●	●	●	●	●	●	●	●	●	●
Coating for outdoor installation (KSB blue / RAL 5002)		○	○	○	○	○	○	○	○	○	○
Drinking water approved coating (can be selected for fluid temperatures ≤ 60 °C)		○	○	○	○	○	○	○	○	○	○
Coating for outdoor installation (special colour)		○	○	○	○	○	○	○	○	○	○
Special coating (customised coating system / coating composition)		□	□	□	□	□	□	□	□	□	□
Installation parts											
Without installation parts		●	●	●	●	●	●	-	-	-	-
Base frame for pump and motor, including chemical anchors[20)]		●	●	●	●	●	-	●	-	-	-
Special base frame for pump and motor, including chemical anchors		○	○	○	○	○	-	○	-	-	-
Pump foundation (foot) including foundation blocks and drive lantern		●	●	●	●	●	-	-	●	●	-
Special design of pump foundation (foot) including foundation blocks and motor pedestal		□	□	□	□	□	-	-	□	□	-
Pump foundation (foot) including foundation blocks		●	●	●	●	●	-	-	-	-	●
Pump foundation (foot) including foundation blocks and motor support frame with foundation rails and foundation bolts		□	□	□	□	□	-	-	-	-	□
Direction of rotation											
"Right": clockwise		●	●	●	●	●	●	●	●	●	●
"Left": anti-clockwise		●	●	●	●	●	●	●	●	●	●
Replacement parts and spare parts											
Replacement parts and spare parts for 2 years of operation		■	■	■	■	■	■	■	■	■	■

18 Applies to max. fluid temperature ≤ 80 °C [176 °F]
19 For more detailed information see ZN56555/1A, ZN56555/1B, ZN56555/1C.
20 Only supplied assembled as a pump set up to motor size ≤ IEC 280M or NEMA 444/5T or max. total weight ≤ 1500 kg [3307 lb].

Features		Material variant					Installation type				
							Omega		Omega V		
		GB	GC	SB	SC	DD_{35}	Fig.0	3E	DB/DK	DP	DJ
Flange											
Drilled to DIN EN 1092 – flat face (type A)		●	●	●	●	●	●	●	●	●	●
Drilled to DIN EN 1092 – raised face (type B)		○	○	○	○	○	○	○	○	○	○
Drilled to ASME B16 – flat face (type FF)		●	●	●	●	●	●	●	●	●	●
Drilled to ASME B16 – raised face (type RF)		○	○	○	○	○	○	○	○	○	○
Special flange		□	□	□	□	□	□	□	□	□	□
Coupling											
Without coupling and coupling guard		●	●	●	●	●	●	-	-	-	●
		○	○	○	○	○	-	○	-	-	-
Torsionally flexible 3-piece jaw coupling (coupling guard not tread-proof)		○	○	○	○	○	○	-	-	-	-
		●	●	●	●	●	-	●	●	●	-
Torsionally flexible 3-piece jaw coupling (coupling guard tread-proof)		○	○	○	○	○	-	○	-	-	-
Torsion-resistant flexible disc coupling with spacer (coupling guard not tread-proof)		○	○	○	○	○	○	○	-	-	-
		□	□	□	□	□	-	-	□	□	-
Torsion-resistant flexible disc coupling with spacer (coupling guard tread-proof)		○	○	○	○	○	-	○	-	-	-
Cardan shaft / coupling with spacer (with/without intermediate bearing)		□	□	□	□	□	-	-	-	-	□
Bearings											
Grease-lubricated rolling element bearing at the drive end (sealed for life)		●	●	●	●	●	●	●	●	●	●
Grease-lubricated rolling element bearing at the non-drive end (sealed for life)		●	●	●	●	●	●	●	-	-	-
		□	□	□	□	□	-	-	□	□	□
Product-lubricated plain bearing at the non-drive end		●	●	●	●	-	-	-	●	●	●
Oil-lubricated rolling element bearings at both ends		-	-	-	-	-	-	-	-	-	-
Motor											
Without motor		●	●	●	●	●	●	●	●	●	●
Low-voltage motor to IEC or NEMA standard (make selected by KSB)[20)21)22)]		○	○	○	○	○	○	-	-	-	-
		●	●	●	●	●	-	●	●	●	●
Low-voltage motor to IEC or NEMA standard (make to KSB standard)[20)21)22)]		○	○	○	○	○	○	-	-	-	-
		●	●	●	●	●	-	●	●	●	●
Special motor (motor size ≤ IEC 280M or ≤ NEMA 444/5T) to customer requirements (make not documented)[20)22)]		○	○	○	○	○	○	○	○	○	○
Special motor (motor size > IEC 280M or > NEMA 444/5T) to customer requirements (make not documented)[20)21)22)23)]		○	○	○	○	○	○	○	-	-	○
		□	□	□	□	□	-	-	□	□	-
Wear rings											
Casing with wear rings / impeller without wear rings		●	●	●	●	●	●	●	●	●	●
Casing with wear rings / impeller with wear rings		■	■	■	■	■	■	■	■	■	■
Piping											
Barrier fluid line / flushing water line made of flexible PTFE (malleable cast iron)		●	●	●	●	●	●	●	●	●	●
Barrier fluid line / flushing water line made of flexible PTFE (stainless steel)		○	○	○	○	-	○	○	○	○	○
Barrier fluid line / flushing water line made of flexible PTFE (duplex steel)		-	-	-	-	●	●	●	●	●	●
Special piping (to customer requirements)		□	□	□	□	□	□	□	□	□	□
Shaft seal											
Gland packing		●	●	●	●	-	●	●	●	●	●
Single mechanical seal (unbalanced)		■	■	■	■	■	■	■	■	■	■
Single mechanical seal (balanced)		■	■	■	■	■	■	■	■	■	■
Special shaft seal (make/design different from KSB specifications)		□	□	□	□	□	□	□	□	□	□
Material certificates to EN 10204											
Volute casing (102)	Certificate type 2.2	■	■	■	■	■	■	■	■	■	■
	Certificate type 3.1	○	○	○	○	○	○	○	○	○	○

1384.5/14-EN

21 The motor can be supplied by the customer and mounted at the site of installation. Motors supplied by KSB can also be mounted by the customer.

22 On request, customer-supplied motors can be mounted by KSB.

23 From motor size > IEC 280M or NEMA 444/5T the motor dimensions depend on the make. KSB uses motors made by Siemens. When using other makes or designs the base frame / motor pedestal must be adjusted (special base frame).

Features		Material variant					Installation type				
							Omega		Omega V		
		GB	GC	SB	SC	DD_{35}	Fig.0	3E	DB/DK	DP	DJ
Pump shafts (211)	Certificate type 2.2	■	■	■	■	■	■	■	■	■	■
	Certificate type 3.1	○	○	○	○	○	○	○	○	○	○
Impeller (234)	Certificate type 2.2	■	■	■	■	■	■	■	■	■	■
	Certificate type 3.1	○	○	○	○	○	○	○	○	○	○
Casing wear ring (502)	Certificate type 2.2	■	■	■	■	■	■	■	■	■	■
	Certificate type 3.1	○	○	○	○	○	○	○	○	○	○
Impeller wear ring (503)	Certificate type 2.2	■	■	■	■	■	■	■	■	■	■
	Certificate type 3.1	○	○	○	○	○	○	○	○	○	○
Accessories											
Cyclone separator		■	■	■	■	-	■	■	■	■	■
Manually actuated vent valve (without additional piping)[24]		■	■	■	■	■	■	■	■	■	■
Automatically actuated vent valve (without additional piping)[24]		□	□	□	□	□	□	□	□	□	□
Manually actuated drain valves (without additional piping)[24]		■	■	■	■	■	■	■	■	■	■
PumpMeter		■	■	■	■	■	■	■	■	■	■
Pt100 temperature sensor[24][25]		■	■	■	■	■	■	■	■	■	■
Limit switch for Pt100[24][25]		■	■	■	■	■	■	■	■	■	■
Transmitter for Pt100[24][25]		■	■	■	■	■	■	■	■	■	■
Measuring nipple (SPM) for manual vibration measurement[24][25]		■	■	■	■	■	■	■	■	■	■
Vibration sensor including vibration monitoring device[24][25]		■	■	■	■	■	■	■	■	■	■
Pressure gauge nominal diameter 100, including valves (without attenuation)[24][25]		■	■	■	■	■	■	■	■	■	■
Pressure gauge nominal diameter 100, including valves (with attenuation)[24][25]		■	■	■	■	■	■	■	■	■	■

Table 10: Symbols key

Symbol	Description
●	Standard design
■	Standard design[26]
○	Special design[26]
□	On request[26]
-	Selection unavailable

24 If no valve or measuring equipment is selected as accessory the corresponding connection is closed with a plug.

25 Measuring equipment is supplied with the pump but not fitted. It has to be connected at the time of commissioning of the pump. This connection is closed with a plug when the pump is supplied.

26 The selection of standard variants or special designs will determine whether surcharges or longer delivery times apply.

Hot water variant

Table 11: Overview of product features of the hot water variant[27)]

Features		Material variant					Installation type				
							Omega		Omega V		
		GB	GC[28)]	SB	SC[29)]	DD_{35}	Fig. 0	3E	DB/ DK	DP	DJ
Acceptance inspections/tests[30)]											
Hydraulic acceptance test to KSB standard DIN ISO 9906 - 2B (equivalent to ANSI HI 14.6-2011/2B)	Non-witnessed	-	■	-	■	-	■	■	■	■	■
	Witnessed	-	○	-	○	-	○	○	○	○	○
Hydraulic acceptance test to DIN ISO 9906 - 1B (equivalent to ANSI HI 14.6-2011/1B)	Non-witnessed	-	■	-	■	-	■	■	■	■	■
	Witnessed	-	○	-	○	-	○	○	○	○	○
Hydraulic acceptance test to DIN ISO 9906 - 1U (equivalent to ANSI HI 14.6-2011/1U or Hydraulic Institute A)	Non-witnessed	-	■	-	■	-	■	■	■	■	■
	Witnessed	-	○	-	○	-	○	○	○	○	○
NPSH test (to DIN ISO 9906 or Hydraulic Institute)	Non-witnessed	-	■	-	■	-	■	■	■	■	■
	Witnessed	-	○	-	○	-	○	○	○	○	○
Sound measurement	Non-witnessed	-	■	-	■	-	■	■	■	■	■
	Witnessed	-	○	-	○	-	○	○	○	○	○
Vibration test	Non-witnessed	-	■	-	■	-	■	■	■	■	■
	Witnessed	-	○	-	○	-	○	○	○	○	○
Bearing temperature measurement	Non-witnessed	-	○	-	○	-	○	○	○	○	○
	Witnessed	-	○	-	○	-	○	○	○	○	○
Visual inspection after test run (strip test)	Non-witnessed	-	■	-	■	-	■	■	■	■	■
	Witnessed	-	○	-	○	-	○	○	○	○	○
Hydrostatic test	Non-witnessed	-	■	-	■	-	■	■	■	■	■
	Witnessed	-	○	-	○	-	○	○	○	○	○
Impeller balancing test to DIN ISO 1940-1 (G6.3)	Non-witnessed	-	○	-	○	-	○	○	○	○	○
	Witnessed	-	○	-	○	-	○	○	○	○	○
Coating inspection	Non-witnessed	-	○	-	○	-	○	○	○	○	○
	Witnessed	-	○	-	○	-	○	○	○	○	○
Dimensional inspection	Non-witnessed	-	○	-	○	-	○	○	○	○	○
	Witnessed	-	○	-	○	-	○	○	○	○	○
Coating											
Coating for indoor installation (KSB blue / RAL 5002)		-	-	-	-	-	-	-	-	-	-
Coating for outdoor installation (KSB blue / RAL 5002)		-	○	-	○	-	○	○	○	○	○
Drinking water approved coating (can be selected for fluid temperatures ≤ 60 °C)		-	-	-	-	-	-	-	-	-	-
Coating for outdoor installation (special colour)		-	○	-	○	-	○	○	○	○	○
Special coating (customised coating system / coating composition)		-	□	-	□	-	□	□	□	□	□
Installation parts											
Without installation parts		-	●	-	●	-	●	-	-	-	-
Base frame for pump and motor, including chemical anchors[31)]		-	○	-	○	-	-	○	-	-	-
Special base frame for pump and motor, including chemical anchors		-	○	-	○	-	-	○	-	-	-
Pump foundation (foot) including foundation blocks and drive lantern		-	□	-	□	-	-	-	□	□	-
Special design of pump foundation (foot) including foundation blocks and motor pedestal		-	□	-	□	-	-	-	□	□	-
Pump foundation (foot) including foundation blocks		-	□	-	□	-	-	-	-	-	□
Pump foundation (foot) including foundation blocks and motor support frame with foundation rails and foundation bolts		-	□	-	□	-	-	-	-	-	□
Direction of rotation											
"Right": clockwise		-	●	-	●	-	●	●	●	●	●
"Left": anti-clockwise		-	●	-	●	-	●	●	●	●	●
Replacement parts and spare parts											
Replacement parts and spare parts for 2 years of operation		-	■	-	■	-	■	■	■	■	■
Flange											
Drilled to DIN EN 1092 – flat face (type A)		-	●	-	●	-	●	●	●	●	●

27 Applies to max. fluid temperature ≤ 140 °C [284 °F]
28 Max. fluid temperature 120 °C [248 °F]
29 Max. fluid temperature 140 °C [284 °F]
30 For more detailed information see ZN56555/1A, ZN56555/1B, ZN56555/1C.
31 Only supplied assembled as a pump set up to motor size ≤ IEC 280M or NEMA 444/5T or max. total weight ≤ 1500 kg [3307 lb].

1384.5/14-EN

Features		Material variant					Installation type				
							Omega		Omega V		
		GB	GC[28]	SB	SC[29]	DD_{35}	Fig. 0	3E	DB/ DK	DP	DJ
Drilled to DIN EN 1092 – raised face (type B)		-	○	-	○	-	○	○	○	○	○
Drilled to ASME B16 – flat face (type FF)		-	●	-	●	-	●	●	●	●	●
Drilled to ASME B16 – raised face (type RF)		-	○	-	○	-	○	○	○	○	○
Special flange		-	□	-	□	-	□	□	□	□	□
Coupling											
Without coupling and coupling guard		-	●	-	●	-	●	-	-	-	●
		-	○	-	○	-	-	○	-	-	-
Torsionally flexible 3-piece jaw coupling (coupling guard not tread-proof)		-	-	-	-	-	-	-	-	-	-
		-	-	-	-	-	-	-	-	-	-
Torsionally flexible 3-piece jaw coupling (coupling guard tread-proof)		-	-	-	-	-	-	-	-	-	-
Torsion-resistant flexible disc coupling with spacer (coupling guard not tread-proof)		-	○	-	○	-	○	○	-	-	-
		-	□	-	□	-	-	-	□	□	-
Torsion-resistant flexible disc coupling with spacer (coupling guard tread-proof)		-	□	-	□	-	-	□	-	-	-
Cardan shaft / coupling with spacer (with/without intermediate bearing)		-	□	-	□	-	-	-	-	-	□
Bearings											
Grease-lubricated rolling element bearing at the drive end (sealed for life)		-	●	-	●	-	●	●	●	●	●
Grease-lubricated rolling element bearing at the non-drive end (sealed for life)		-	●	-	●	-	●	●	-	-	-
		-	□	-	□	-	-	-	□	□	□
Product-lubricated plain bearing at the non-drive end		-	-	-	-	-	-	-	-	-	-
Oil-lubricated rolling element bearings at both ends		-	-	-	-	-	-	-	-	-	-
Motor											
Without motor		-	●	-	●	-	●	●	●	●	●
Low-voltage motor to IEC or NEMA standard (make selected by KSB)[31)32)33)]		-	○	-	○	-	○	-	-	-	-
		-	●	-	●	-	-	●	●	●	●
Low-voltage motor to IEC or NEMA standard (make to KSB standard)[31) 32)33)]		-	○	-	○	-	○	-	-	-	-
		-	●	-	●	-	-	●	●	●	●
Special motor (motor size ≤ IEC 280M or ≤ NEMA 444/5T) to customer requirements (make not documented)[31)33)]		-	○	-	○	-	○	○	○	○	○
Special motor (motor size > IEC 280M or > NEMA 444/5T) to customer requirements (make not documented)[31)32)33)34)]		-	○	-	○	-	○	○	-	-	○
		-	□	-	□	-	-	-	□	□	-
Wear rings											
Casing with wear rings / impeller without wear rings		-	●	-	●	-	●	●	●	●	●
Casing with wear rings / impeller with wear rings		-	■	-	■	-	■	■	■	■	■
Piping											
Barrier fluid line / flushing water line made of flexible PTFE (malleable cast iron)		-	●	-	●	-	●	●	●	●	●
Barrier fluid line / flushing water line made of flexible PTFE (stainless steel)		-	○	-	○	-	○	○	○	○	○
Barrier fluid line / flushing water line made of flexible PTFE (duplex steel)		-	-	-	-	-	-	-	-	-	-
Special piping (to customer requirements)		-	□	-	□	-	□	□	□	□	□
Shaft seal											
Gland packing		-	-	-	-	-	-	-	-	-	-
Single mechanical seal (unbalanced)		-	-	-	-	-	-	-	-	-	-
Single mechanical seal (balanced)		-	■	-	■	-	■	■	■	■	■
Special shaft seal (make/design different from KSB specifications)		-	□	-	□	-	□	□	□	□	□
Material certificates to EN 10204											
Volute casing (102)	Certificate type 2.2	-	■	-	■	-	-	■	-	■	-
	Certificate type 3.1	-	○	-	○	-	-	○	-	○	-
Pump shafts (211)	Certificate type 2.2	-	■	-	■	-	-	■	-	■	-

32 The motor can be supplied by the customer and mounted at the site of installation. Motors supplied by KSB can also be mounted by the customer.

33 On request, customer-supplied motors can be mounted by KSB.

34 From motor size > IEC 280M or NEMA 444/5T the motor dimensions depend on the make. KSB uses motors made by Siemens. When using other makes or designs the base frame / motor pedestal must be adjusted (special base frame).

Features		Material variant					Installation type				
							Omega		Omega V		
		GB	GC[28]	SB	SC[29]	DD_{35}	Fig. 0	3E	DB/ DK	DP	DJ
Pump shafts (211)	Certificate type 3.1	-	○	-	○	-	-	○	-	○	-
Impeller (234)	Certificate type 2.2	-	■	-	■	-	-	■	-	■	-
	Certificate type 3.1	-	○	-	○	-	-	○	-	○	-
Casing wear ring (502)	Certificate type 2.2	-	■	-	■	-	-	■	-	■	-
	Certificate type 3.1	-	○	-	○	-	-	○	-	○	-
Impeller wear ring (503)	Certificate type 2.2	-	■	-	■	-	-	■	-	■	-
	Certificate type 3.1	-	○	-	○	-	-	○	-	○	-
Accessories											
Cyclone separator		-	-	-	-	-	-	-	-	-	-
Manually actuated vent valve (without additional piping)[35]		-	■	-	■[36]	-	■[36]	■[36]	■[36]	■[36]	■[36]
Automatically actuated vent valve (without additional piping)[35]		-	-	-	-	-	-	-	-	-	-
Manually actuated drain valves (without additional piping)[35]		-	■	-	■	-	■	■	■	■	■
PumpMeter		-	-	-	-	-	-	-	-	-	-
Pt100 temperature sensor[35][37]		-	■	-	■	-	■	■	■	■	■
Limit switch for Pt100[35][37]		-	■	-	■	-	■	■	■	■	■
Transmitter for Pt100[35][37]		-	■	-	■	-	■	■	■	■	■
Measuring nipple (SPM) for manual vibration measurement[35][37]		-	■	-	■	-	■	■	■	■	■
Vibration sensor including vibration monitoring device[35][37]		-	■	-	■	-	■	■	■	■	■
Pressure gauge nominal diameter 100, including valves (without attenuation)[35][37]		-	■	-	■	-	■	■	■	■	■
Pressure gauge nominal diameter 100, including valves (with attenuation)[35][37]		-	■	-	■	-	■	■	■	■	■

Table 12: Symbols key

Symbol	Description
●	Standard design
■	Standard design[38]
○	Special design[38]
□	On request[38]
-	Selection unavailable

Related documents

- General Arrangement Drawings DIN /IEC motors 1384.3940
- General Arrangement Drawings NEMA motors 1384.3946
- Characteristic Curves Booklet 50 Hz 1384.450
- Characteristic Curves Booklet 60 Hz 1384.460

1384.5/14-EN

35 If no valve or measuring equipment is selected as accessory the corresponding connection is closed with a plug.
36 Only permissible up to 16 bar [227 psi] (operating pressure)
37 Measuring equipment is supplied with the pump but not fitted. It has to be connected at the time of commissioning of the pump. This connection is closed with a plug when the pump is supplied.
38 The selection of standard variants or special designs will determine whether surcharges or longer delivery times apply.

Specifications required for enquiries/orders

Pump:

- Pump designation
- Maximum and minimum inlet pressure
- Flow rate Q, head H_{total}
- Flange design
- Shaft seal
- Type of fluid handled and fluid temperature
- Solids content
- Direction of rotation / motor position
- Accessories required
- Special inspections and acceptance tests
- Quantity and language of operating manuals

Drive (selected by KSB):

- Type of construction
- Enclosure
- Voltage, frequency, starting method
- Ambient temperature
- Thermal class
- Accessories required

Drive (selected by customer):

- Binding data sheet with motor dimensions and effective speed

1384.5/14-EN

Selection charts

Omega / Omega V, 50 Hz, n = 2900 rpm

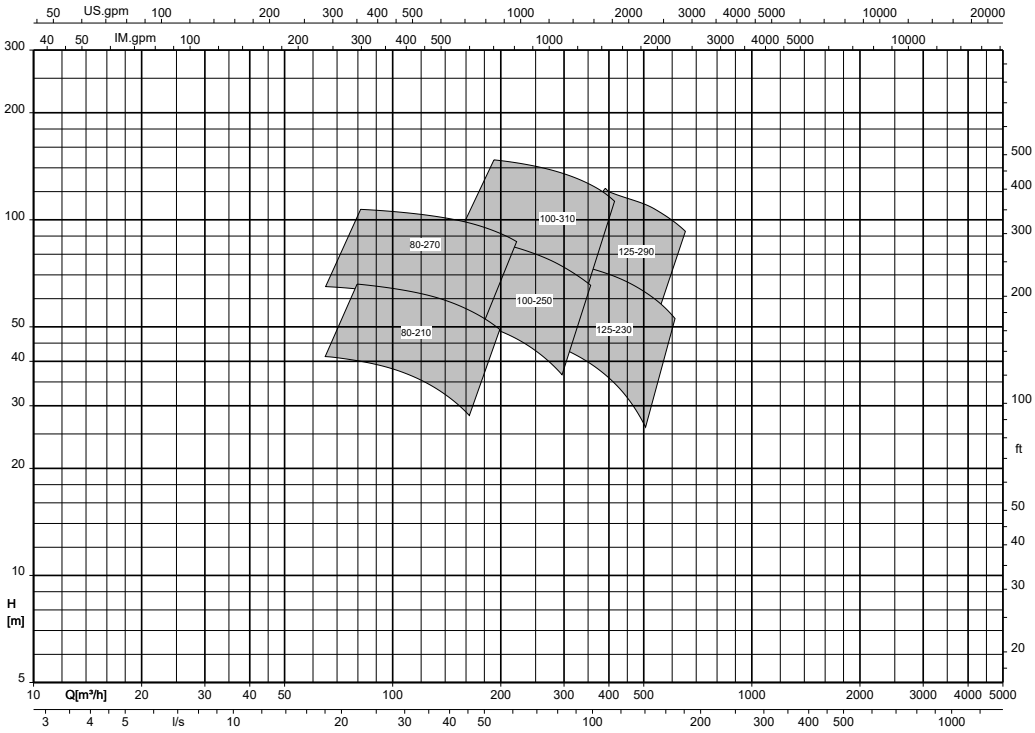

Omega / Omega V, 50 Hz, n = 1450 rpm

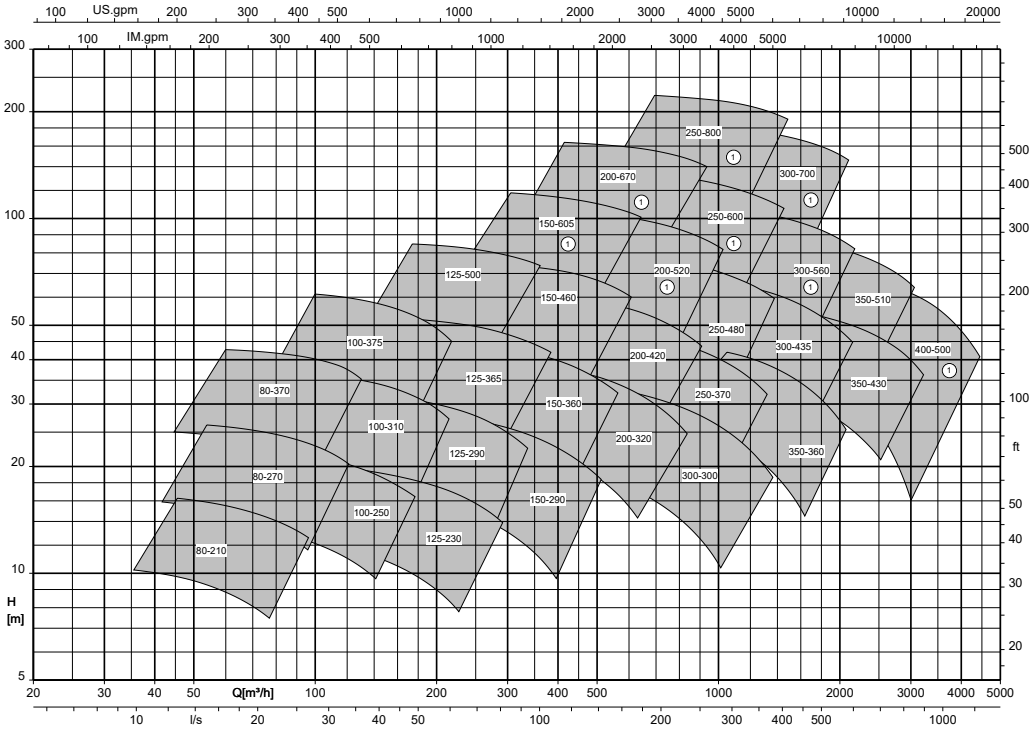

1384.5/14-EN

①	Pump casing with double volute

Omega / Omega V, 60 Hz, n = 3500 rpm

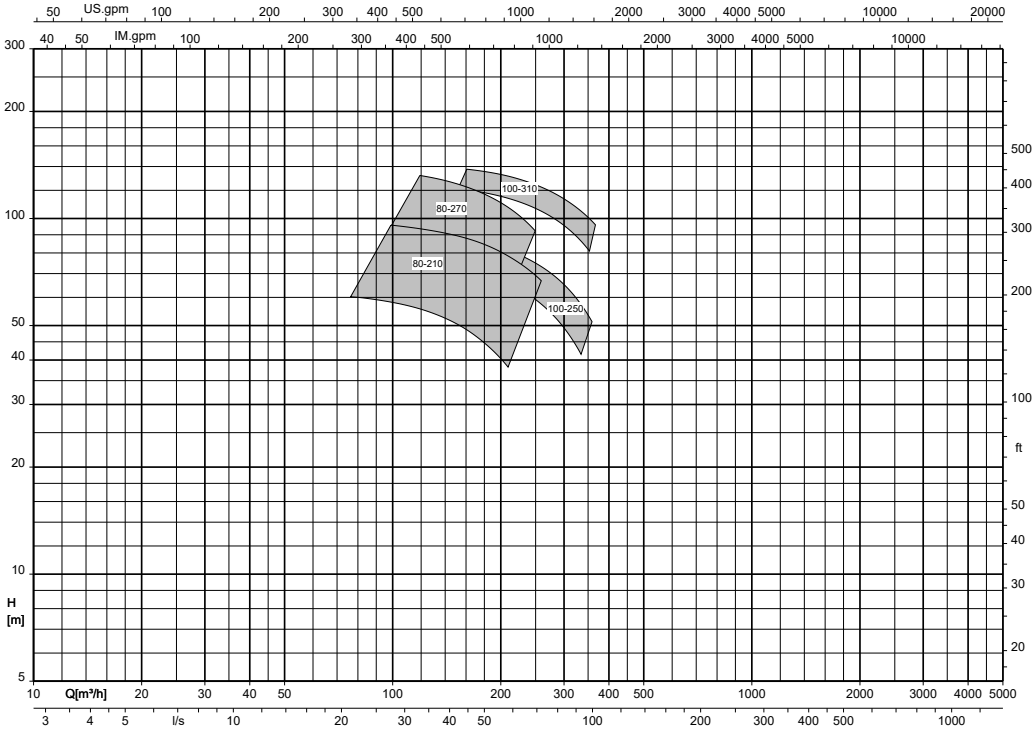

Omega / Omega V, 60 Hz, n = 1750 rpm

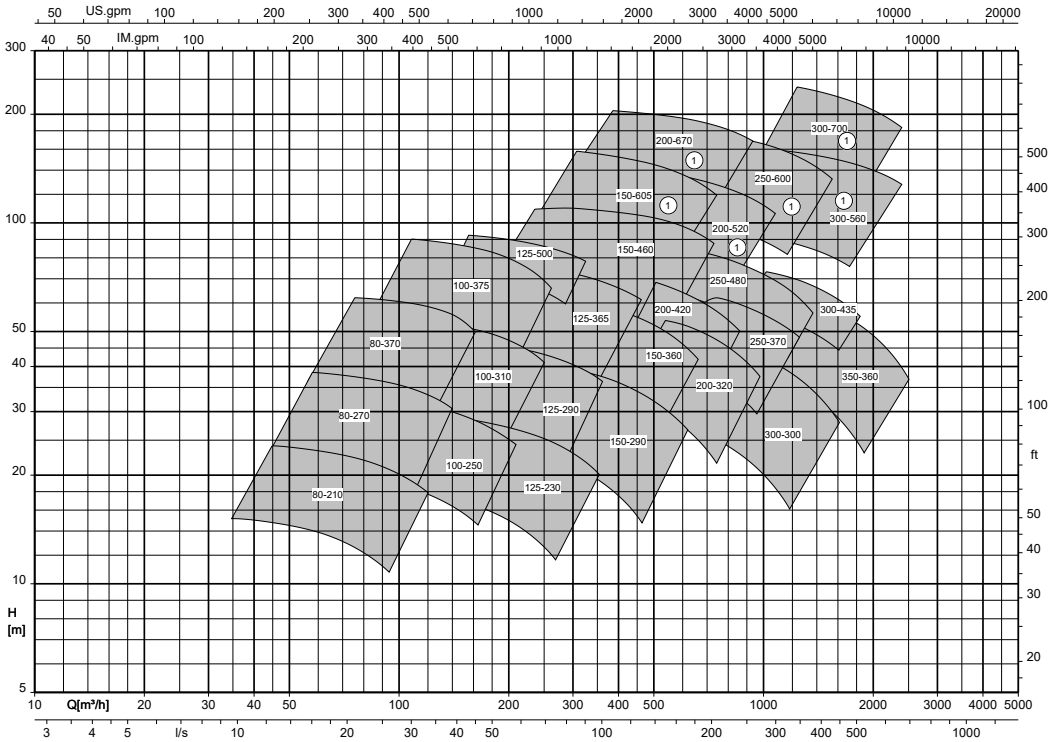

①	Pump casing with double volute

1384.5/14-EN

Types of installation

Fig.0

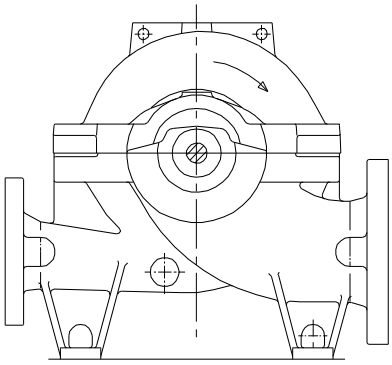

Fig. 1: Fig. 0: Bare-shaft pump

Options of installation parts:

- None

Coupling options:

- Torsionally flexible jaw coupling
- Torsion-resistant flexible disc coupling (on request)

Coupling guard options:

- Light-duty design, not tread-proof

Delivery/transport:

- Pump

3E

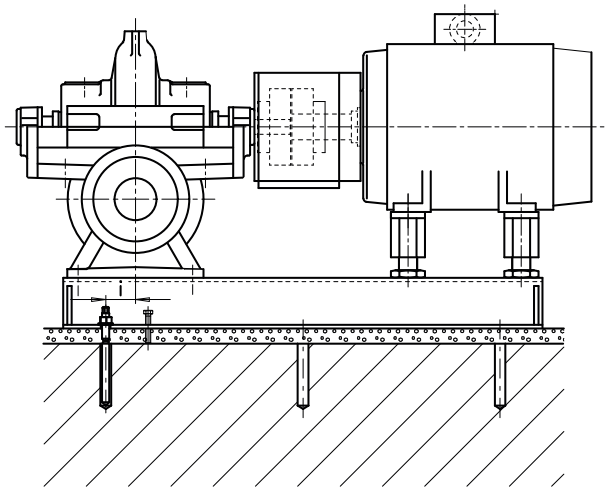

Fig. 2: 3E: Pump and motor on a common base frame

Options of installation parts:

- Base frame for pump and motor, including chemical anchors
- Special base frame for pump and motor, including chemical anchors[39)]

Coupling options:

- Torsionally flexible jaw coupling
- Torsion-resistant flexible disc coupling with spacer[40)]

Coupling guard options:

- Light-duty design, not tread-proof
- Heavy-duty, tread-proof design (on request)

Delivery/transport:

- Up to motor size ≤ IEC 280M or NEMA 444/5T or a max. total weight ≤ 1500 kg [3307 lb] pump and motor are supplied on the base frame.
- From motor size > IEC 280M or NEMA 444/5T or a max. total weight > 1500 kg [3307 lb] pump, motor and base frame are supplied separately.

39 On request only: for motors > IEC 280M or NEMA 444/5T and motors outside KSB standard as well as for other customer-specific versions, special base frame for transporting pump sets with motors > IEC 280M or NEMA 444/5T

40 On request only: special base frame required

DB/DK

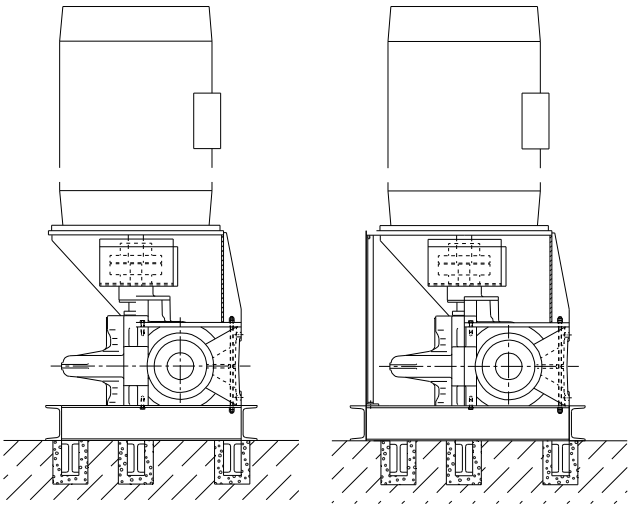

DB installation DK installation

DB/DK: motor mounted on the drive lantern

Options of installation parts:

- Pump foundation including foundation blocks and drive lantern
- Pump foundation including foundation blocks and special drive lantern[41)]

Coupling options:

- Torsionally flexible jaw coupling
- Torsion-resistant flexible disc coupling with spacer

Coupling guard options:

- Light-duty design, not tread-proof

Delivery/transport:

- Pump supplied on pump foundation with drive lantern mounted. The motor is supplied separately.

DJ

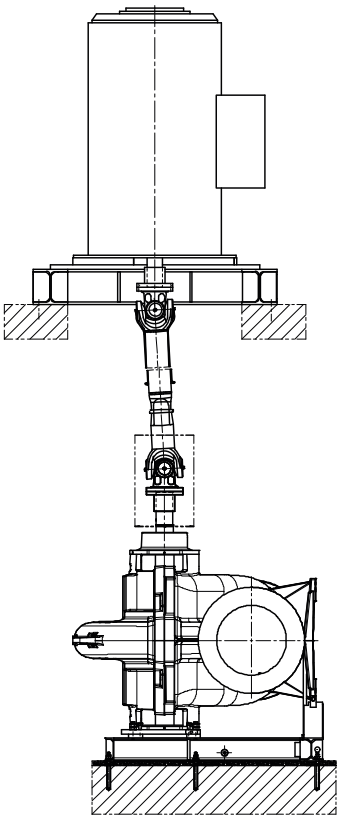

Fig. 3: DJ: Pump and motor on separate levels

Options of installation parts:

- Pump foundation (foot) including foundation blocks
- Pump foundation (foot) including foundation blocks, motor support frame, foundation rails and foundation bolts (on request)

Coupling options:

- Cardan shaft with/without intermediate bearing (on request)
- Coupling with spacer (on request)

Coupling guard options:

- Light-duty design, not tread-proof

Delivery / transport:

- Pump on corresponding pump foot. Motor and motor support frame are supplied separately.

41 On request only: for motors > IEC 280M and/or NEMA 444/5T and motors outside KSB standard as well as for other customer-specific versions, special drive lantern for motors > IEC 280M or NEMA 444/5T

DP

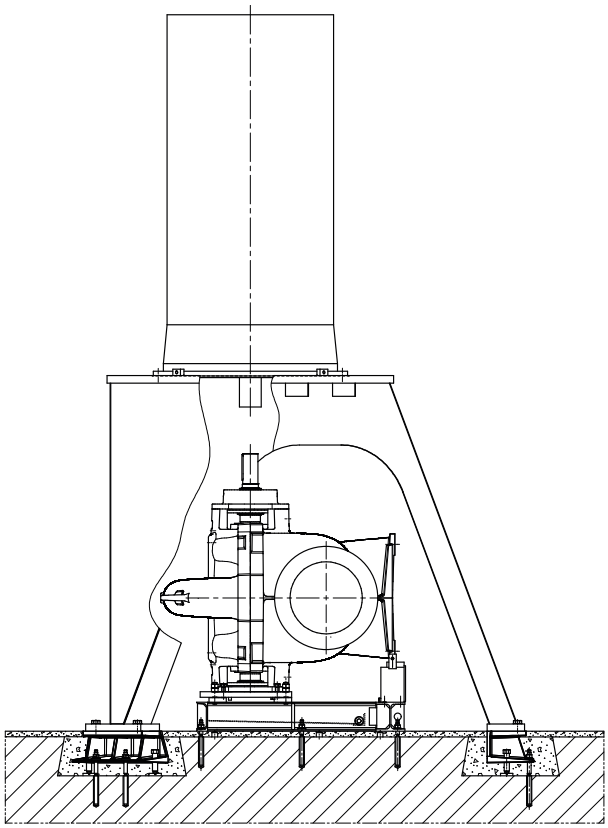

Fig. 4: DP: Motor mounted on separate drive lantern

Options of installation parts:

- Pump base frame (foot) including foundation bolts, and drive lantern (including foundation rails and chemical anchors)

Coupling options:

- Torsionally flexible jaw coupling
- Torsion-resistant flexible disc coupling with spacer[42)]

Coupling guard options:

- Light-duty design, not tread-proof

Delivery/transport:

- Pump with pump base frame (foot). Motor and drive lantern are supplied as individual units.

1384.5/14-EN

42 On request only: for motors > IEC 280M or outside KSB standard as well as for other customer-specific versions, special drive lantern for motors > IEC 280M

Scope of supply

Omega (standard design)

- Bare shaft pump (without accessories)
- Casing wear rings
- Shaft sealed by gland packing
- Grease-packed rolling element bearings
- Barrier fluid line / flushing water line made of flexible material, without cyclone separator
- Installation/operating manual

Omega V (standard design)

- Bare shaft pump (without accessories, with pump foundation)
- Casing wear rings
- Shaft sealed by gland packing
- One grease-lubricated and one product-lubricated bearing
- Barrier fluid line / flushing water line made of flexible material, without cyclone separator
- KSB standard coating for indoor installation
- Installation/operating manual

Components for completing the pump set

- For horizontal installation: baseplate / base frame for pump and motor (including foundation bolts)
- For vertical installation: drive lantern stool and foot (including support feet and foundation bolts, depending on the motor size)
- Drive
- Coupling

Coupling guard

Accessories

- Barrier fluid line / flushing water line with cyclone separator
- Vent valves and/or drain valves
- Pressure gauges
- Temperature sensor for rolling element bearings (Pt100)
- Limit switch or transmitter for Pt100
- PumpMeter
- SPM nipple or vibration monitoring device

Shipment/transport and packaging

After the pump sets are completely assembled at the factory to be adjusted to specific requirements, they are partly dismantled again for shipment. The assembly status a pump set is supplied in depends on the type of pump set, its dimensions and weight. Pump, baseplate and motor are supplied ex works without packaging. On request, a variety of packaging options can be provided against a surcharge. More information (⇨ Page 20) .

1384.5/14-EN

General assembly drawing with list of components

Horizontal installation (example)

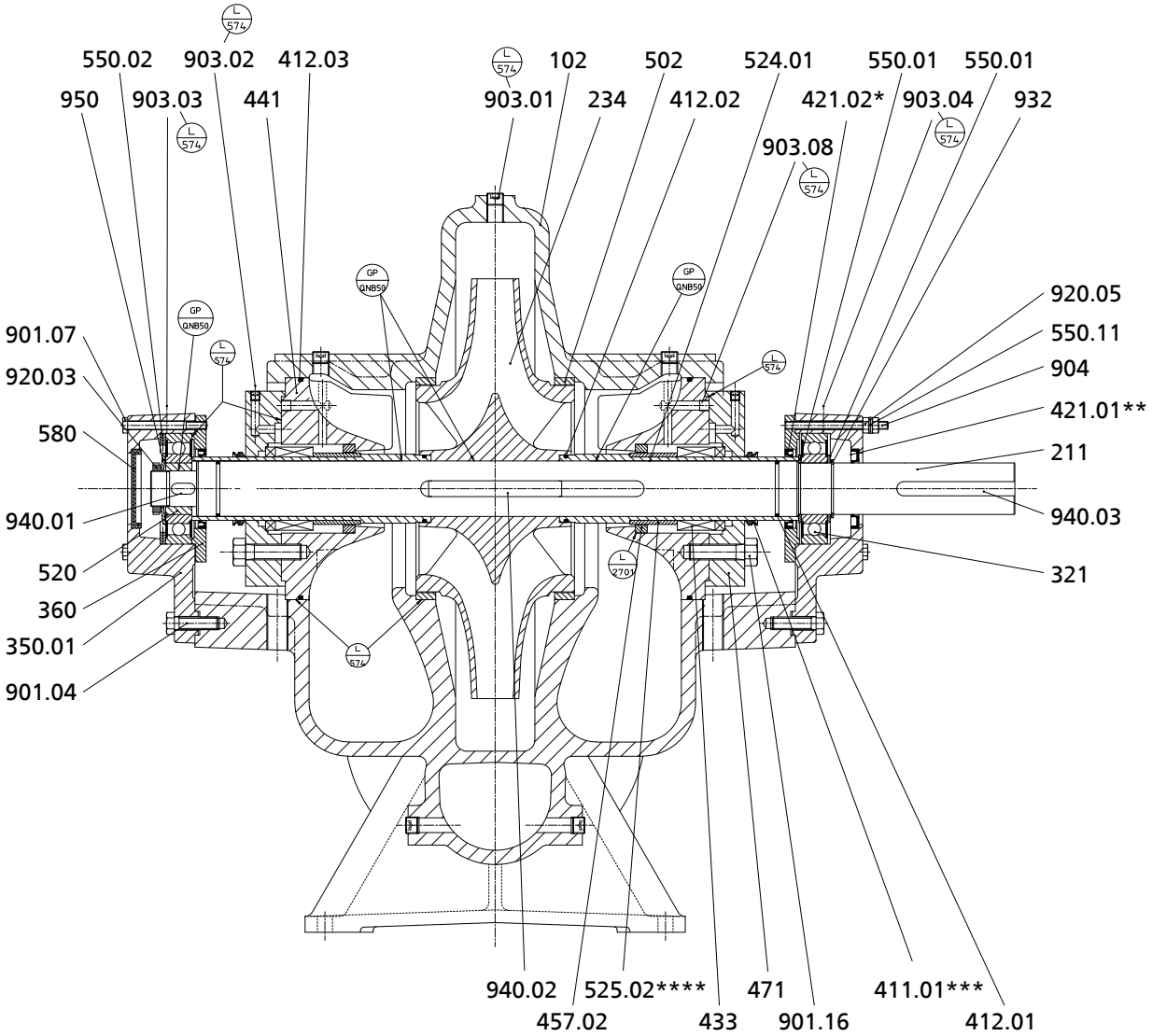

Fig. 5: General assembly drawing for horizontal installation
* For ATEX version labyrinth ring 423.02
** For ATEX version labyrinth ring 423.01
*** Does not apply to ATEX version
**** Does not apply to version with KSB mechanical seal 4OM

Table 13: List of components

Part No.	Description	Part No.	Description
102	Volute casing	502	Casing wear ring
211	Pump shaft	520	Sleeve
234	Impeller	524.01	Shaft protecting sleeve
321	Radial ball bearing	525.02	Spacer sleeve
350.01	Bearing housing	550.01/.02/.11	Disc
360	Bearing cover	580	Cap
411.01	Joint ring	901.04/.07/.16	Hexagon head bolt
412.01/.02/.03	O-ring	903.01/.02/.03/.04/.08	Screw plug
421.01/.02	Lip seal	904	Grub screw
433	Mechanical seal	920.03/.05	Nut
441	Shaft seal housing	932	Circlip
457.02	Neck ring	940.01/.02/.03	Key
471	Seal cover	950	Spring

Vertical installation (example)

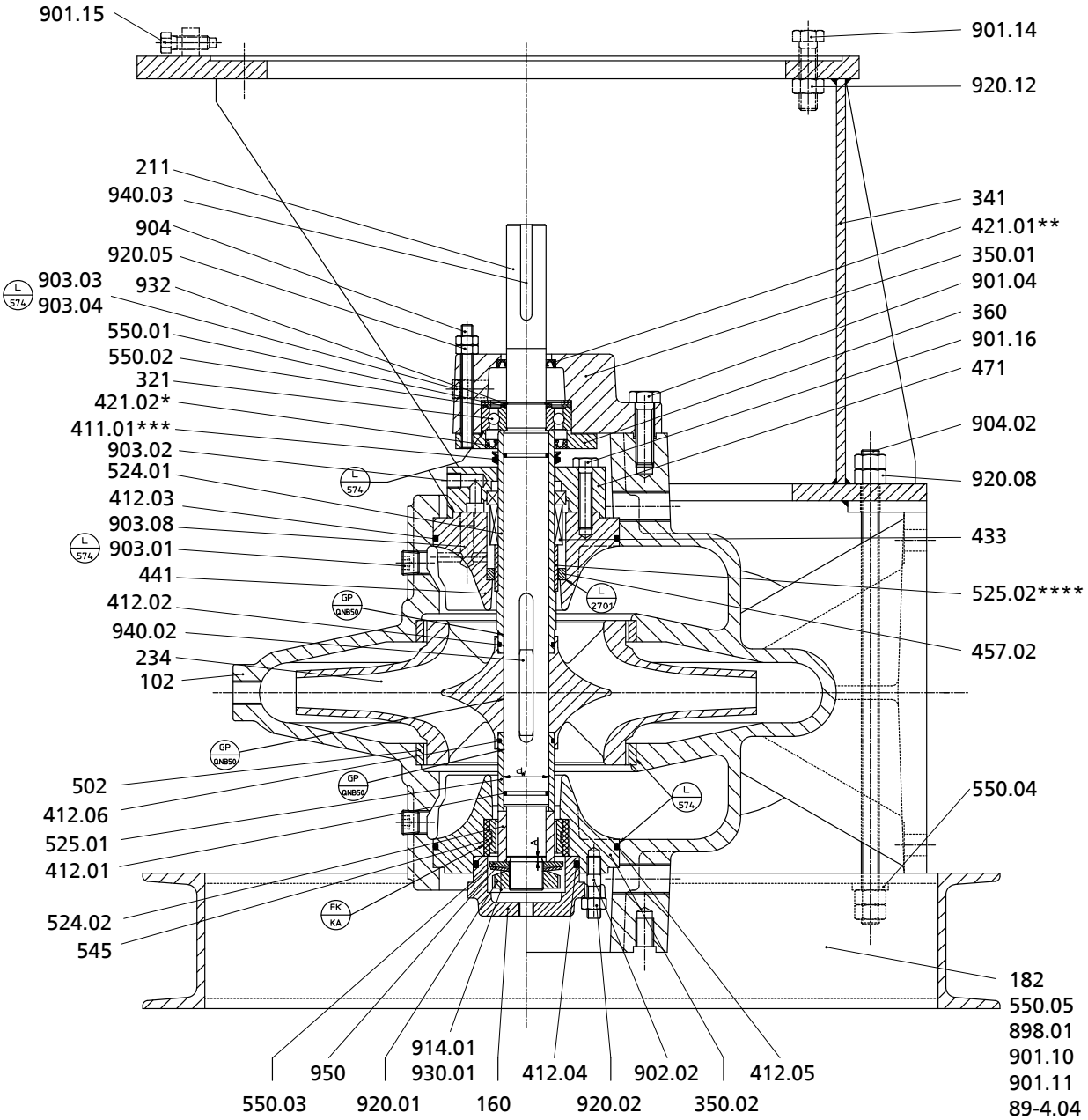

Fig. 6: General assembly drawing for installation type DB
* For ATEX version labyrinth ring 423.02
** For ATEX version labyrinth ring 423.01
*** Does not apply to ATEX version
**** Does not apply to version with KSB mechanical seal 4OM

Table 14: List of components

Part No.	Description	Part No.	Description
102	Volute casing	524.01/.02	Shaft protecting sleeve
160	Cover	525.01/.02	Spacer sleeve
182	Foot	545	Bearing bush
211	Pump shaft	550.01/.02/.03/.04/.05	Disc
234	Impeller	89-4.04	Shim
321	Radial ball bearing	898.01	Foundation block
341	Drive lantern	901.04/.10/.11/.14/.15/.16	Hexagon head bolt
350.01/.02	Bearing housing	902.02	Stud
360	Bearing cover	903.01/.02/.03/.04/.08	Screw plug
411.01	Joint ring	904.02	Grub screw
412.01/.02/.03/.04/.05/.06	O-ring	914.01	Hexagon socket head cap screw

Part No.	Description	Part No.	Description
421.01/.02	Lip seal	920.01/.02/.05/.08/.12	Nut
433	Mechanical seal	930.01	Lock washer
441	Shaft seal housing	932	Circlip
457.02	Neck ring	940.02/.03	Key
471	Seal cover	950	Spring
502	Casing wear ring		

Standard design: gland packing

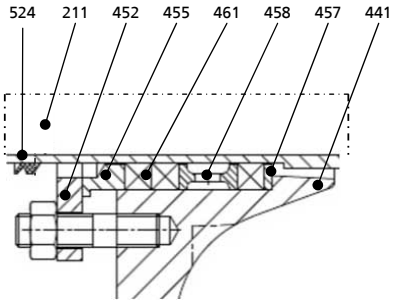

Table 15: List of components

Part No.	Description
211	Pump shaft
441	Shaft seal housing
452	Gland follower
455	Stuffing box insert
457	Neck ring
458	Lantern ring
461	Packing rings
524	Shaft protecting sleeve

Standard variant: mechanical seal (schematic)

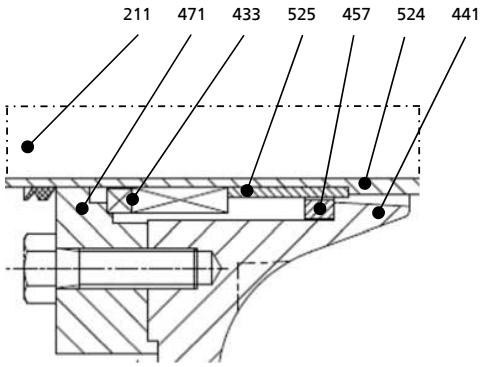

Table 16: List of components

Part No.	Description
211	Pump shaft
433	Mechanical seal
441	Shaft seal housing
457	Neck ring
471	Seal cover
524	Shaft protecting sleeve
525	Spacer sleeve

Standard variant: impeller with impeller wear ring

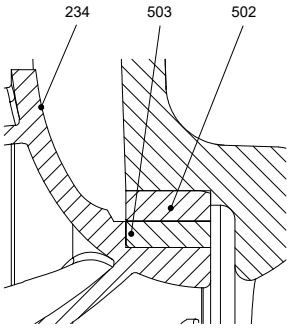

Table 17: List of components

Part No.	Description
234	Double-entry impeller
502	Casing wear ring
503	Impeller wear ring

Standard design: product-lubricated bearing (Omega V)

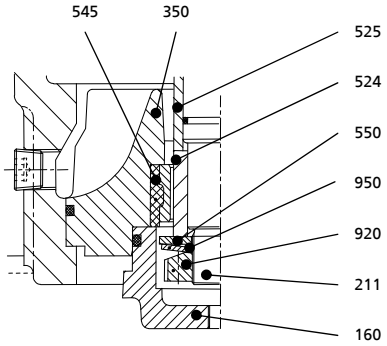

Table 18: List of components

Part No.	Description
160	Cover
211	Pump shaft
350	Bearing housing
524	Shaft protecting sleeve
525	Spacer sleeve
545	Bearing bush
550	Disc
920	Nut
950	Disc spring

2024-03-26

1384.5/14-EN

LENNTECH
WATER TREATMENT SOLUTIONS
info@lenntech.com Tel. +31-152-610-900
www.lenntech.com Fax. +31-152-616-289