LENNTECH
WATER TREATMENT SOLUTIONS

Axially Split Volute Casing Pump

RDLO / RDLO V

Type Series Booklet

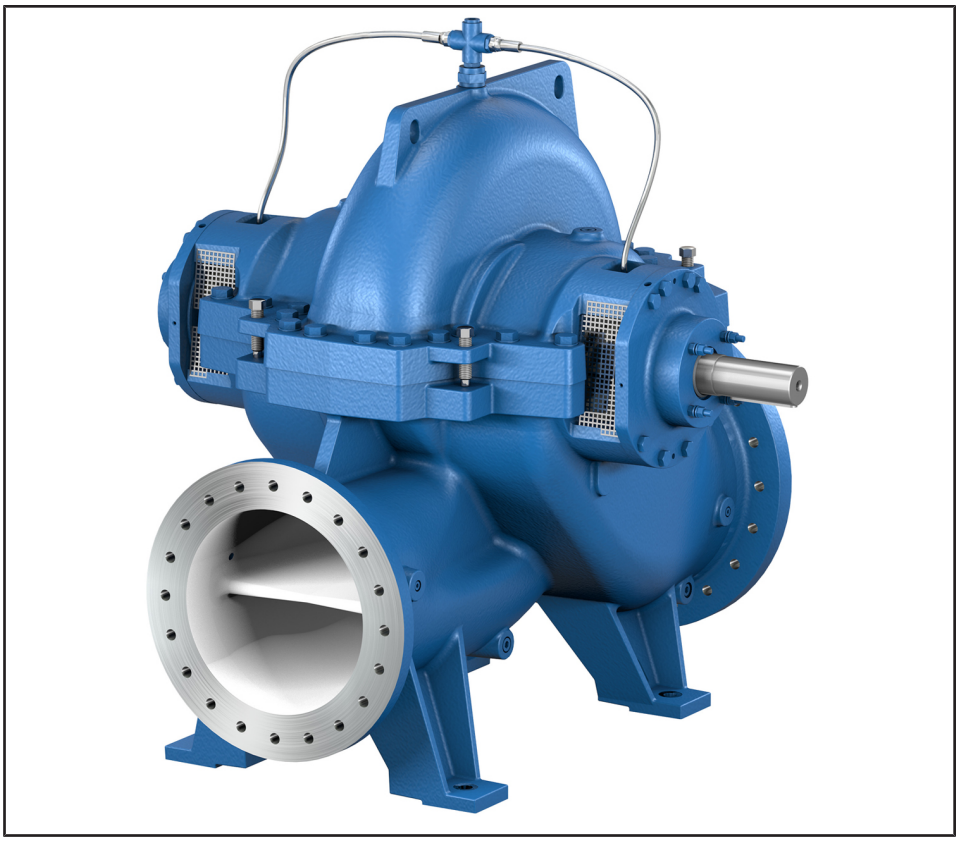

KSB

Legal information/Copyright

Type Series Booklet RDLO / RDLO V

All rights reserved. The contents provided herein must neither be distributed, copied, reproduced, edited or processed for any other purpose, nor otherwise transmitted, published or made available to a third party without the manufacturer's express written consent.

Subject to technical modification without prior notice.

© KSB SE & Co. KGaA, Frankenthal 2024-04-01

Contents

Water Supply **4**
Axially Split Volute Casing Pump 4
RDLO / RDLO V 4
Main applications 4
Fluids handled 4
Operating data 4
Designation 4
Design details 5
Materials 6
Coating and preservation 7
Product benefits 8
Acceptance inspections/tests 8
Selection information 9
Solids content 9
Directions of rotation and flow 9
Overview of product features 10
Specifications required for enquiries/orders 12
Selection charts 14
RDLO / RDLO V, n = 1480 rpm 14
RDLO / RDLO V, n = 985 rpm 15
RDLO / RDLO V, n = 740 rpm 16
RDLO / RDLO V, n = 590 rpm 17
RDLO / RDLO V, n = 1780 rpm 18
RDLO / RDLO V, n = 1180 rpm 19
RDLO / RDLO V, n = 890 rpm 20
RDLO / RDLO V, n = 715 rpm 21
Installation types 22
Fig.0 22
2E 22
3E 22
4E 23
DJ 23
DP 23
Scope of supply 24
General arrangement drawings with list of components 25
Horizontal installation (example) 25
Vertical installation (example) 27

Water Supply

Axially Split Volute Casing Pump

RDLO / RDLO V

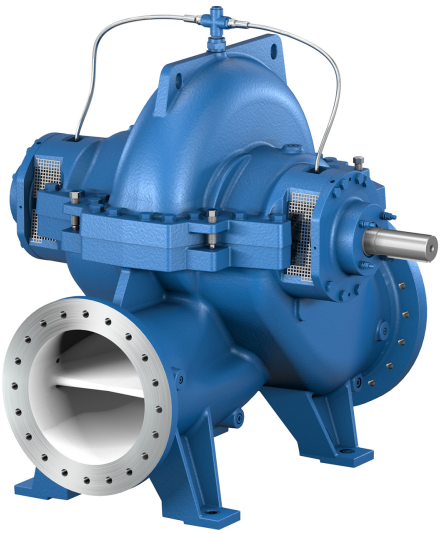

Main applications

- Waterworks
- Desalination plants
- Pressure boosting
- Water transport
- Service water and cooling water for power stations and industry
- Irrigation pumping stations
- Drainage pumping stations
- Fire-fighting systems
- Shipbuilding
- District heating systems and district cooling systems

Fluids handled

RDLO / RDLO V pumps are designed for pumping water and other fluids with a low solids content. The pumps are very versatile and can be used for the following fluids, for example:

- Brackish water
- River water, lake water and groundwater
- Stormwater
- Service water
- Fire-fighting water
- Cooling water
- Condensate
- Heating water
- Drinking water

Operating data

Table 1: Operating properties

Characteristic		Value
Sizes	DN [mm]	350 - 900
	DN [”]	14-35
Flow rate[1)]	Q [m³/h]	≤ 18000
	Q [US.gpm]	≤ 79260
Head[1)2)]	H [m]	≤ 300
	H [ft]	≤ 984
Operating pressure[2)]	p [bar]	≤ 30
	p [psi]	≤ 435
Fluid temperature[3)]	T [°C]	≥ 0 - ≤ +140
	T [°F]	≥ +32 - ≤ +284

Designation

Example: RDLO V 350-690 A GB P M

Table 2: Designation key

Code	Description	
RDLO	Type series	
V	Design	
	[4)]	Horizontal installation
	V	Vertical installation
350	Nominal discharge nozzle diameter [mm]	
690	Nominal impeller diameter [mm]	
A	Impeller type	
	A, B	
GB	Material variant (⇨ Page 6)	
	GB	Grey cast iron / bronze
	GC	Grey cast iron / chrome steel
	SB	Nodular cast iron / bronze
	SC	Nodular cast iron / chrome steel
	DD_{35}	Duplex stainless steel / duplex stainless steel
P	Shaft seal	
	P	Gland packing
	G	Mechanical seal
M	Bearing lubrication	
	F	Grease
	M	Fluid handled
	O	Oil lubrication

1387.5/10-EN

1 Larger flow rates and higher heads are available on request.
2 Depending on the material and size
3 Standard design up to 80 °C [176 °F] max.
4 Blank

Design details

Design

- Volute casing pump
- Horizontal installation / vertical installation
- Single-stage
- Nominal diameter of the discharge nozzles:
  350 mm - 700 mm [14 inches - 28 inches]

Pump casing

- Axially split volute casing
- Volute casing with integrally cast pump feet
- Replaceable casing wear rings
- Mating dimensions to EN or ASME

Impeller type

- Double-entry radial impeller[5)]

Pump shaft

Variants with rolling element bearing:

- Completely dry shaft
- Shaft protecting sleeves in the seal area

Shaft seal

- Gland packing
- Balanced mechanical seal

Bearings

For horizontal installation:

- Grease-lubricated rolling element bearings
- Oil-lubricated rolling element bearings

For vertical installation:

- Grease-lubricated rolling element bearings
- Bottom: product-lubricated rubber plain bearing, top:
  grease-packed rolling element bearing

1387.5/10-EN

5 Optionally with impeller wear rings

Materials

Table 3: Overview of material variants

Part No.	Description	Material variant				
		GB	GC	SB	SC	DD_{35} [6]
All pump sets						
102	Volute casing	Grey cast iron	Grey cast iron	Nodular cast iron	Nodular cast iron	Duplex steel
211	Pump shaft	Stainless steel	Stainless steel	Stainless steel	Stainless steel	Duplex steel
234	Impeller	Bronze	Stainless steel	Bronze	Stainless steel	Duplex steel
350.01	Bearing housing	Grey cast iron	Grey cast iron	Grey cast iron	Grey cast iron	Grey cast iron
360.01	Bearing cover	Steel	Steel	Steel	Steel	Steel
441	Shaft seal housing	Grey cast iron	Grey cast iron	Grey cast iron	Grey cast iron	Duplex steel
502	Casing wear ring	Bronze	Bronze	Bronze	Bronze	Duplex steel
503	Impeller wear ring (optional)	Bronze	Stainless steel	Bronze	Stainless steel	Duplex steel
525.01	Spacer sleeve	Bronze	Bronze	Bronze	Bronze	Duplex steel
For pump sets with ball bearings on both sides only						
350.02	Bearing housing	Grey cast iron	Grey cast iron	Grey cast iron	Grey cast iron	Grey cast iron
360.02	Bearing cover	Unalloyed steel [7]	Unalloyed steel [7]	Unalloyed steel [7]	Unalloyed steel [7]	Unalloyed steel [7]
525.03	Spacer sleeve	Bronze	Bronze	Bronze	Bronze	Duplex steel
For pump sets with product-lubricated plain bearing only						
524.03	Shaft protecting sleeve	Stainless steel	Stainless steel	Stainless steel	Stainless steel	-
525.02	Spacer sleeve	Bronze	Bronze	Bronze	Bronze	-
525.04	Spacer sleeve	Bronze	Bronze	Bronze	Bronze	-
545	Bearing bush	Bronze/rubber	Bronze/rubber	Bronze/rubber	Bronze/rubber	-
550.03	Disc	Stainless steel	Stainless steel	Stainless steel	Stainless steel	-
For versions with gland packing only						
452	Gland follower	Nodular cast iron	Nodular cast iron	Nodular cast iron	Nodular cast iron	-
457.01	Neck ring (p < 7 bar [99.5 psi])	Bronze	Bronze	Bronze	Bronze	-
457.03	Neck ring (p ≥ 7 bar [99.5 psi])	Bronze	Bronze	Bronze	Bronze	-
458	Lantern ring	Bronze	Bronze	Bronze	Bronze	-
461	Packing ring	Ramie fibre PTFE-impreg-nated	Ramie fibre PTFE-impreg-nated	Ramie fibre PTFE-impreg-nated	Ramie fibre PTFE-impreg-nated	-
524.01	Shaft protecting sleeve	Stainless steel	Stainless steel	Stainless steel	Stainless steel	-
For versions with mechanical seal only						
433	Balanced mechanical seal	Carbon/silicon carbide	Carbon/silicon carbide	Carbon/silicon carbide	Carbon/silicon carbide	Carbon/silicon carbide
457.02	Neck ring	Bronze	Bronze	Bronze	Bronze	Duplex steel
471	Seal cover	Stainless steel	Stainless steel	Stainless steel	Stainless steel	Duplex steel
524.02	Shaft protecting sleeve	Bronze	Bronze	Bronze	Bronze	Duplex steel

1387.5/10-EN

6 PREN ≥ 35 only applies to the main cast components (volute casing, impeller, shaft seal housing). Duplex steels with special PREN values available on request

7 For RDLO V only

Coating and preservation

Table 4: Coating for indoor installation

Coating type	Material variant					Casing			Base frame
	GB	GC	SB	SC	DD_{35}	Exterior	Interior	Bearing housing	
A1[8]	✗	✗	✗	✗	–	Epoxy resin base paint, colour RAL 5002 (ultramarine blue)[9]	Epoxy resin base primer, colour at our discretion	Epoxy resin base paint,colour RAL 5002 (ultramarine blue)[9]	Epoxy resin base paint,colour RAL 5002 (ultramarine blue)[9]
A1-E[8][10]	✗	✗	✗	✗	–	Epoxy resin base paint, colour RAL 5002 (ultramarine blue)[9]	Epoxy resin base paint, colour RAL 5015 (sky blue)[11]	Epoxy resin base paint, colour RAL 5002 (ultramarine blue)[9]	Epoxy resin base paint,colour RAL 5002 (ultramarine blue)[9]
B1-E[8]	–	–	–	–	✗	Epoxy resin base paint, colour RAL 5002 (ultramarine blue)[9]	None; sand-blasted SA 2 ½	Epoxy resin base paint, colour RAL 5002 (ultramarine blue)[9]	Epoxy resin base paint,colour RAL 5002 (ultramarine blue)[9]

Table 5: Coating for outdoor installation

Coating type	Material variant					Casing			Base frame
	GB	GC	SB	SC	DD_{35}	Exterior	Interior	Bearing housing	
A2	✗	✗	✗	✗	–	Polyurethane base paint, colour RAL 5002 (ultramarine blue)[12]	Epoxy resin base primer, colour at our discretion	Polyurethane base paint, colour RAL 5002 (ultramarine blue)[12]	Polyurethane base paint, colour RAL 5002 (ultramarine blue)[12]
A2-E[8][10]	✗	✗	✗	✗	–	Polyurethane base paint, colour RAL 5002 (ultramarine blue)[12]	Epoxy resin base paint, colour RAL 5015 (sky blue)[11]	Polyurethane base paint, colour RAL 5002 (ultramarine blue)[12]	Polyurethane base paint, colour RAL 5002 (ultramarine blue)[12]
B2-E[8]	–	–	–	–	✗	Polyurethane base paint, colour RAL 5002 (ultramarine blue)[12]	None; sand-blasted SA 2 ½	Polyurethane base paint, colour RAL 5002 (ultramarine blue)[12]	Polyurethane base paint, colour RAL 5002 (ultramarine blue)[12]

8 Only permissible for fluid temperatures ≤ 80 °C [176 °F]

9 For indoor use in industry and in a marine atmosphere; other colours only in coating variants A2, B2 and on request.

10 Extra charge

11 Approved for drinking water (KTW, DVGW, ACS). The impeller and rotor components are not coated. No other colours available. Max. permissible temperature for drinking water approved coating 60 °C [140 °F]. Only approved for drinking water up to 25 °C [77 °F] max.

12 For indoor use and outdoor use in industry and in a marine atmosphere; other colours are available on request.

Product benefits

- Low maintenance costs:
  - Fast and easy to install thanks to self-centring components (upper casing part, rotor, casing cover)
  - Materials resistant to corrosion and abrasion
  - Smooth operation with low vibration levels
  - Replacement and spare parts fit several pump sizes
- Long service life:
  - Sealed and dry shaft
  - Short bearing distances and a short shaft
  - Optional impeller wear rings
  - Replaceable shaft protecting sleeve
- High operating reliability:
  - Rigid shaft without threads between the bearings
  - Generously sized bearings (Lh_{10} = 100,000 hours)
  - Reliable sealing thanks to solid casing split flange
  - Double-entry impeller for axial thrust balancing
  - Double volute design
- High flexibility:
  - Drive can be positioned to the left or right of the pump
  - Shaft sealed by gland packing or mechanical seals
  - Various horizontal and vertical installation options
  - Flanges to DIN or ASME
- Excellent efficiencies and NPSH values:
  - Computer-optimised impellers
  - Large impeller inlet diameters for optimum suction behaviour
  - Cost-effective replacing of casing and impeller wear rings
  - Vortex-free intake elbow with low energy losses
  - Impeller trimmed to match the specified duty point
  - Several hydraulic systems per pump size

Acceptance inspections/tests

- Functional and acceptance tests
  - For information on acceptance tests and inspections refer to the QCPs (see KSB Standard ZN56555-2A ZN56555-2B ZN56555-2C)
- Quality assurance system
  - DIN ISO 9001 / EN 29001

1387.5/10-EN

Selection information

Solids content

Table 6: Solids content by shaft seal and material variant in [ppm] or [mg/l]

Shaft seal	Material variant					
	Max. permissible solids content for variants with barrier and flushing water line without cyclone separator			Max. permissible solids content for variants with barrier and flushing water line with cyclone separator[13)]		
	GB/GC	SB/SC	DD_{35}	GB/GC	SB/SC	DD_{35}
Gland packing	50	50	50	100	100	100
Balanced mechanical seal	50	50	50	100	100	100

Directions of rotation and flow

Table 7: Directions of rotation and flow

RDLO: variant for horizontal installation		RDLO V: variant for vertical installation	
Direction of rotation, seen from the drive end			
"Right" = clockwise	**"Left"** = anti-clockwise	**"Right"** = clockwise	**"Left"** = anti-clockwise
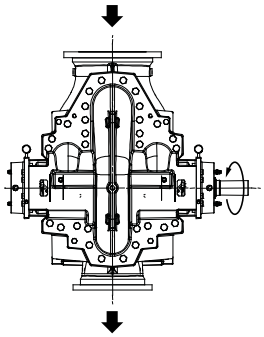	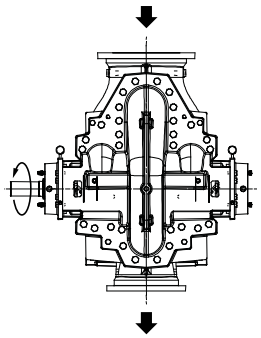	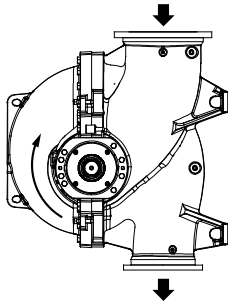	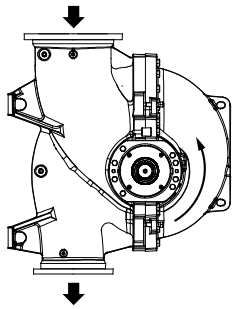

1387.5/10-EN

13 Higher solids contents on request

Overview of product features

Table 8: Symbols key

Symbol	Description
●	Standard design
■	Standard variant[14)]
○	Special design[14)]
□	On request[14)]
-	Selection unavailable

Table 9: General overview (valid for standard design)[15)]

Features		Material variant					Installation type					
							RDLO				RDLO V	
		GB	GC	SB	SC	DD_{35}	Fig. 0	2E	3E	4E	DP	DJ
Acceptance inspections/tests[16)]												
Hydraulic acceptance test to KSB standard DIN ISO 9906 - 2B (equivalent to ANSI HI 14.6-2011/2B)	Non-witnessed	■	■	■	■	■	■	■	■	■	■	■
	Witnessed	○	○	○	○	○	○	○	○	○	○	○
Hydraulic acceptance test to DIN ISO 9906 - 1B (equivalent to ANSI HI 14.6-2011/1B)	Non-witnessed	○	○	○	○	○	○	○	○	○	○	○
	Witnessed	○	○	○	○	○	○	○	○	○	○	○
Hydraulic acceptance test to DIN ISO 9906 - 1U (equivalent to ANSI HI 14.6-2011/1U and Hydraulic Institute A)	Non-witnessed	○	○	○	○	○	○	○	○	○	○	○
	Witnessed	○	○	○	○	○	○	○	○	○	○	○
NPSH test (to DIN ISO 9906 or Hydraulic Institute)	Non-witnessed	○	○	○	○	○	○	○	○	○	○	○
	Witnessed	○	○	○	○	○	○	○	○	○	○	○
Sound measurement	Non-witnessed	○	○	○	○	○	○	○	○	○	○	○
	Witnessed	○	○	○	○	○	○	○	○	○	○	○
Vibration test	Non-witnessed	○	○	○	○	○	○	○	○	○	○	○
	Witnessed	○	○	○	○	○	○	○	○	○	○	○
Bearing temperature measurement	Non-witnessed	○	○	○	○	○	○	○	○	○	○	○
	Witnessed	○	○	○	○	○	○	○	○	○	○	○
Visual inspection after test run (strip test)	Non-witnessed	○	○	○	○	○	○	○	○	○	○	○
	Witnessed	○	○	○	○	○	○	○	○	○	○	○
Hydrostatic test	Non-witnessed	○	○	○	○	○	○	○	○	○	○	○
	Witnessed	○	○	○	○	○	○	○	○	○	○	○
Impeller balancing test	Non-witnessed	○	○	○	○	○	○	○	○	○	○	○
	Witnessed	○	○	○	○	○	○	○	○	○	○	○
Coating inspection	Non-witnessed	○	○	○	○	○	○	○	○	○	○	○
	Witnessed	○	○	○	○	○	○	○	○	○	○	○
Dimensional inspection	Non-witnessed	○	○	○	○	○	○	○	○	○	○	○
	Witnessed	○	○	○	○	○	○	○	○	○	○	○
Coating												
Coating for indoor installation (KSB blue / RAL 5002)		●	●	●	●	●	●	●	●	●	●	●
Coating for outdoor installation (KSB blue / RAL 5002)		○	○	○	○	○	○	○	○	○	○	○
Coating approved for drinking water[17)]		○	○	○	○	○	○	○	○	○	○	○
Coating for outdoor installation (special paint)		○	○	○	○	○	○	○	○	○	○	○
Special coating (coating system / coating composition to customer specifications)		□	□	□	□	□	□	□	□	□	□	□
Installation parts												

1387.5/10-EN

14 The selection of standard variants or special designs will determine whether surcharges or longer delivery times apply.
15 Maximum fluid temperature 80 °C [176 °F]
16 Further information see ZN 56555/2A, ZN 56555/2B, ZN 56555/2C.
17 Available for selection for fluid temperatures ≤ 60 °C

Features	Material variant					Installation type					
						RDLO				RDLO V	
	GB	GC	SB	SC	DD_{35}	Fig. 0	2E	3E	4E	DP	DJ
Without installation parts	●	●	●	●	●	●	-	-	-	-	-
Base frame for pump and motor, including foundation bolts	○	○	○	○	○	-	○	○	○	-	-
Special base frame for pump and motor, including foundation bolts	□	□	□	□	□	-	□	□	□	-	-
Pump foundation (foot), including foundation blocks and drive lantern	□	□	□	□	□	-	-	-	-	□	-
Special design of pump foundation (foot) including foundation blocks and motor pedestal	□	□	□	□	□	-	-	-	-	□	-
Pump foundation (foot), including foundation blocks	□	□	□	□	□	-	-	-	-	-	□
Pump foundation (foot), including foundation blocks and motor support frame with foundation rails and foundation bolts	□	□	□	□	□	-	-	-	-	-	□
Direction of rotation											
"Right": clockwise	●	●	●	●	●	●	●	●	●	●	●
"Left": anti-clockwise	●	●	●	●	●	●	●	●	●	●	●
Replacement parts and spare parts											
Replacement parts and spare parts for 2 years of operation	○	○	○	○	○	○	○	○	○	○	○
Flange											
Drilled to DIN EN 1092 – flat face (type A)	●	●	●	●	●	●	●	●	●	●	●
Drilled to DIN EN 1092 – raised face (type B)	○	○	○	○	○	○	○	○	○	○	○
Drilled to ASME B16 – flat face (type FF)	●	●	●	●	●	●	●	●	●	●	●
Drilled to ASME B16 – raised face (type RF)	○	○	○	○	○	○	○	○	○	○	○
Special flange	□	□	□	□	□	□	□	□	□	□	□
Coupling											
Without coupling and coupling guard	●	●	●	●	●	●	●	●	●	-	●
Torsionally flexible 3-piece jaw coupling (coupling guard not tread-proof)	○	○	○	○	○	○	○	○	○	-	-
Torsionally flexible 3-piece jaw coupling (coupling guard tread-proof)	○	○	○	○	○	-	○	○	○	-	-
Torsion-resistant flexible disc coupling with spacer (coupling guard not tread-proof)	○	○	○	○	○	○	○	○	○	□	-
Torsion-resistant flexible disc coupling with spacer (coupling guard tread-proof)	○	○	○	○	○	○	○	○	○	-	-
Cardan shaft / coupling with spacer (with/without intermediate bearing)	□	□	□	□	□	-	-	-	-	-	□
Bearings											
Grease-lubricated rolling element bearings at the drive end and non-drive end	●	●	●	●	●	●	●	●	●	●	●
Grease-lubricated rolling element bearing at the drive end, and product-lubricated plain bearing at the non-drive end	●	●	●	●	-	-	-	-	-	●	●
Oil-lubricated rolling element bearings at the drive end and non-drive end	●	●	●	●	●	●	●	●	●	-	-
Motor											
Without motor	●	●	●	●	●	●	○	○	○	□	□
Low-voltage motor to KSB standard[18)19)]	●	●	●	●	●	-	●	●	●	□	●
Low-voltage motor different from KSB standard[18)19)]	□	□	□	□	□	-	□	□	□	□	□
Special motor (high-voltage/NEMA/with frequency inverter/etc.)[18)19)]	□	□	□	□	□	-	□	□	□	□	□
Wear rings											
Casing with wear rings / impeller without wear rings	●	●	●	●	●	●	●	●	●	●	●
Casing with wear rings / impeller with wear rings	■	■	■	■	■	■	■	■	■	■	■
Piping											
Barrier fluid line / flushing water line made of flexible PTFE (malleable cast iron)	●	●	●	●	●	●	●	●	●	●	●
Barrier fluid line / flushing water line made of flexible PTFE (stainless steel)	■	■	■	■	-	■	■	■	■	■	■
Barrier fluid line / flushing water line made of flexible PTFE (duplex stainless steel)	-	-	-	-	■	■	■	■	■	■	■
Barrier fluid line / flushing water line, rigid pipe (stainless steel)	■	■	■	■	-	■	■	■	■	■	■
Barrier fluid line / flushing water line, rigid pipe (duplex/Monel)	-	-	-	-	■	■	■	■	■	■	■
Special piping (to customer requirements)	□	□	□	□	□	□	□	□	□	□	□

18 The motor can be supplied and mounted by the customer. Motors supplied by KSB can also be mounted by the customer.
19 On request, customer-supplied motors can be mounted by KSB Service.

Features		Material variant					Installation type					
							RDLO				RDLO V	
		GB	GC	SB	SC	DD_{35}	Fig. 0	2E	3E	4E	DP	DJ
Shaft seal												
Gland packing		●	●	●	●	-	●	●	●	●	●	●
Single mechanical seal (unbalanced)		-	-	-	-	-	-	-	-	-	-	-
Single mechanical seal (balanced)		■	■	■	■	■	■	■	■	■	■	■
Special shaft seal (make/design different from KSB specifications)		□	□	□	□	□	□	□	□	□	□	□
Material certificates to EN 10204												
Volute casing (102)	Certificate type 2.2	■	■	■	■	■	■	■	■	■	■	■
	Certificate type 3.1	○	○	○	○	○	○	○	○	○	○	○
Pump shafts (211)	Certificate type 2.2	■	■	■	■	■	■	■	■	■	■	■
	Certificate type 3.1	○	○	○	○	○	○	○	○	○	○	○
Impeller (234)	Certificate type 2.2	■	■	■	■	■	■	■	■	■	■	■
	Certificate type 3.1	○	○	○	○	○	○	○	○	○	○	○
Casing wear ring (502)	Certificate type 2.2	■	■	■	■	■	■	■	■	■	■	■
	Certificate type 3.1	○	○	○	○	○	○	○	○	○	○	○
Impeller wear ring (503)	Certificate type 2.2	■	■	■	■	■	■	■	■	■	■	■
	Certificate type 3.1	○	○	○	○	○	○	○	○	○	○	○
Accessories												
Cyclone separator		■	■	■	■	-	■	■	■	■	■	■
Manually actuated vent valve (without additional piping)[20]		■	■	■	■	■	■	■	■	■	■	■
Automatically actuated vent valve (without additional piping)[20]		□	□	□	□	□	□	□	□	□	□	□
Manually actuated drain valves (without additional piping)[20]		■	■	■	■	■	■	■	■	■	■	■
PumpMeter		■	■	■	■	■	■	■	■	■	■	■
Temperature sensor Pt100 resistance thermometer[20)21)]		■	■	■	■	■	■	■	■	■	■	■
Limit switch for Pt100 resistance thermometer[20)21)]		■	■	■	■	■	■	■	■	■	■	■
Transmitter for Pt100 resistance thermometer[20)21)]		■	■	■	■	■	■	■	■	■	■	■
Measuring nipple (SPM) for manual vibration measurement[20)21)]		■	■	■	■	■	■	■	■	■	■	■
Vibration sensor including vibration monitoring device[20)21)]		■	■	■	■	■	■	■	■	■	■	■
Pressure gauge nominal diameter 100, including valves (without attenuation)[20)21)]		■	■	■	■	-	■	■	■	■	■	■
Pressure gauge nominal diameter 100, including valves (with attenuation)[20)21)]		■	■	■	■	■	■	■	■	■	■	■
Pressure gauge nominal diameter 160, including valves (with attenuation)[20)21)]		■	■	■	■	■	■	■	■	■	■	■

Specifications required for enquiries/orders

Pump:

- Pump designation
- Maximum and minimum inlet pressure
- Flow rate Q, head H_{total}
- Flange design
- Shaft seal
- Type of fluid handled and fluid temperature
- Solids content
- Direction of rotation / motor position
- Accessories required
- Special inspections and acceptance tests
- Quantity and language of operating manuals

Drive (selected by KSB):

- Type of construction
- Enclosure
- Voltage, frequency, starting method
- Ambient temperature
- Thermal class

20 If no valve or measuring equipment is selected as accessory the corresponding connection is closed with a plug.

21 The measuring equipment is supplied with the pump but not fitted. It has to be connected at the time of commissioning of the pump. This connection is closed with a plug when the pump is supplied.

1387.5/10-EN

- Accessories required

Drive (selected by customer):

- Binding data sheet with motor dimensions and effective speed

1387.5/10-EN

Selection charts

RDLO / RDLO V, n = 1480 rpm

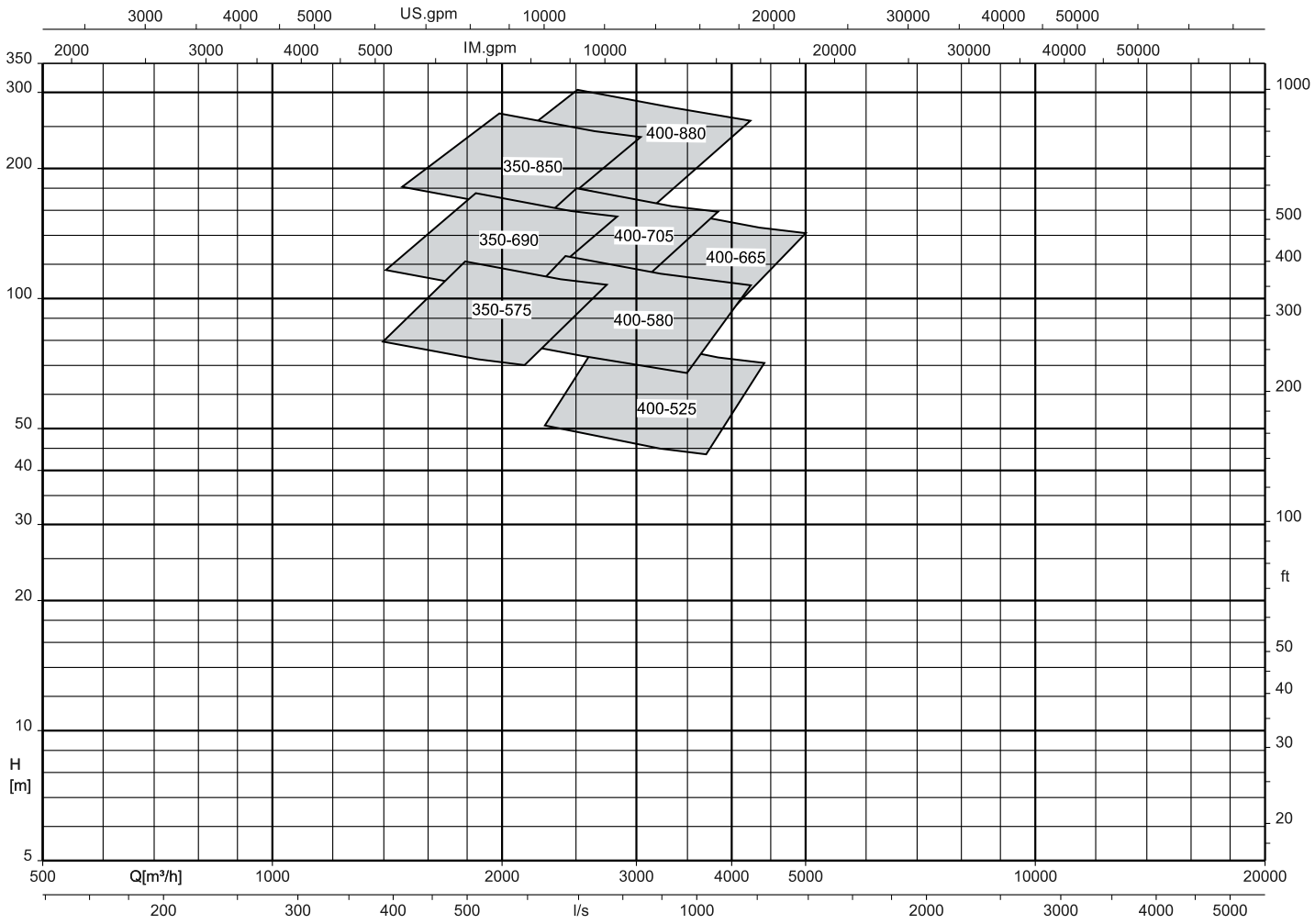

RDLO / RDLO V, n = 985 rpm

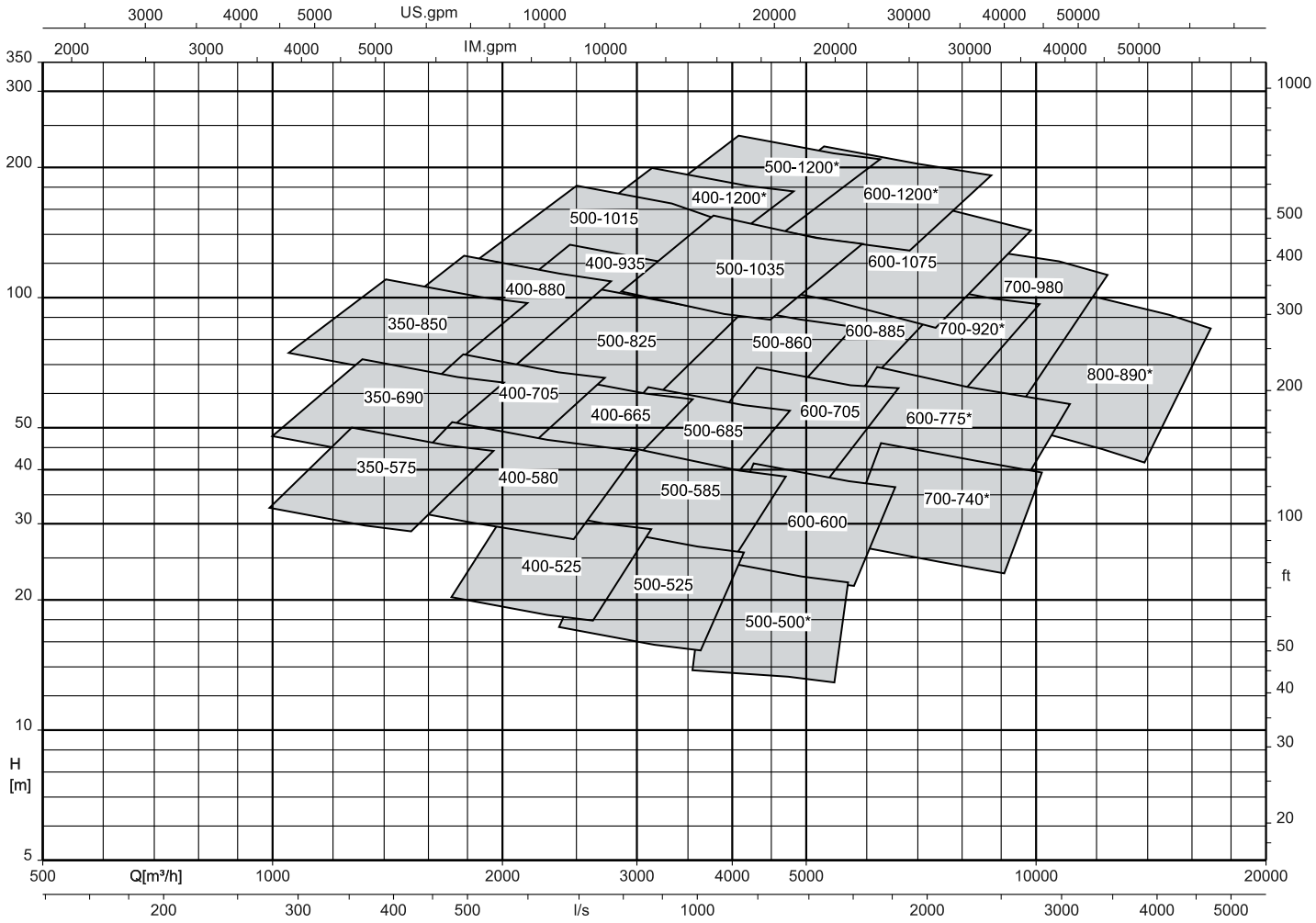

* New RDLO size

RDLO / RDLO V, n = 740 rpm

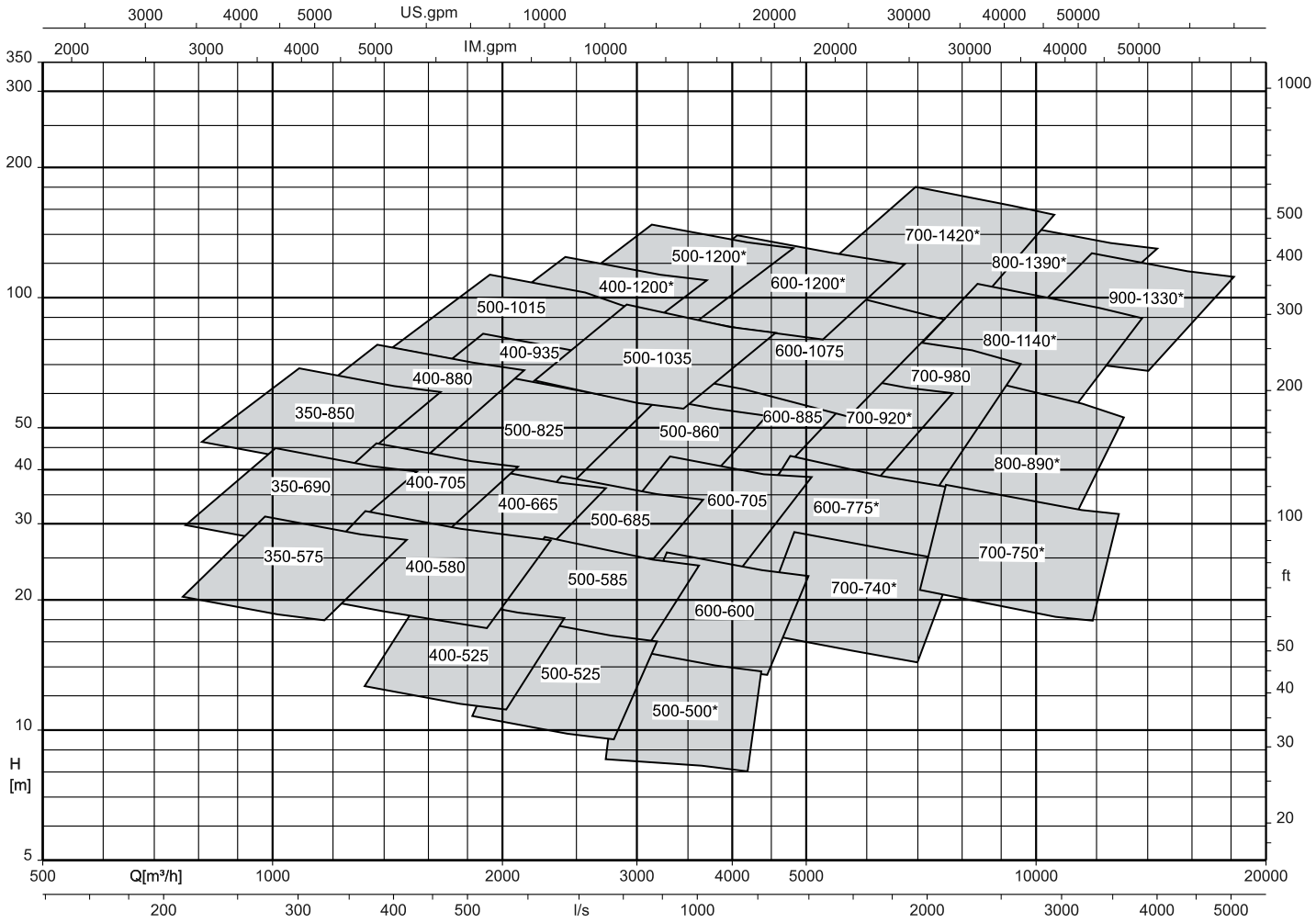

* New RDLO size

RDLO / RDLO V, n = 590 rpm

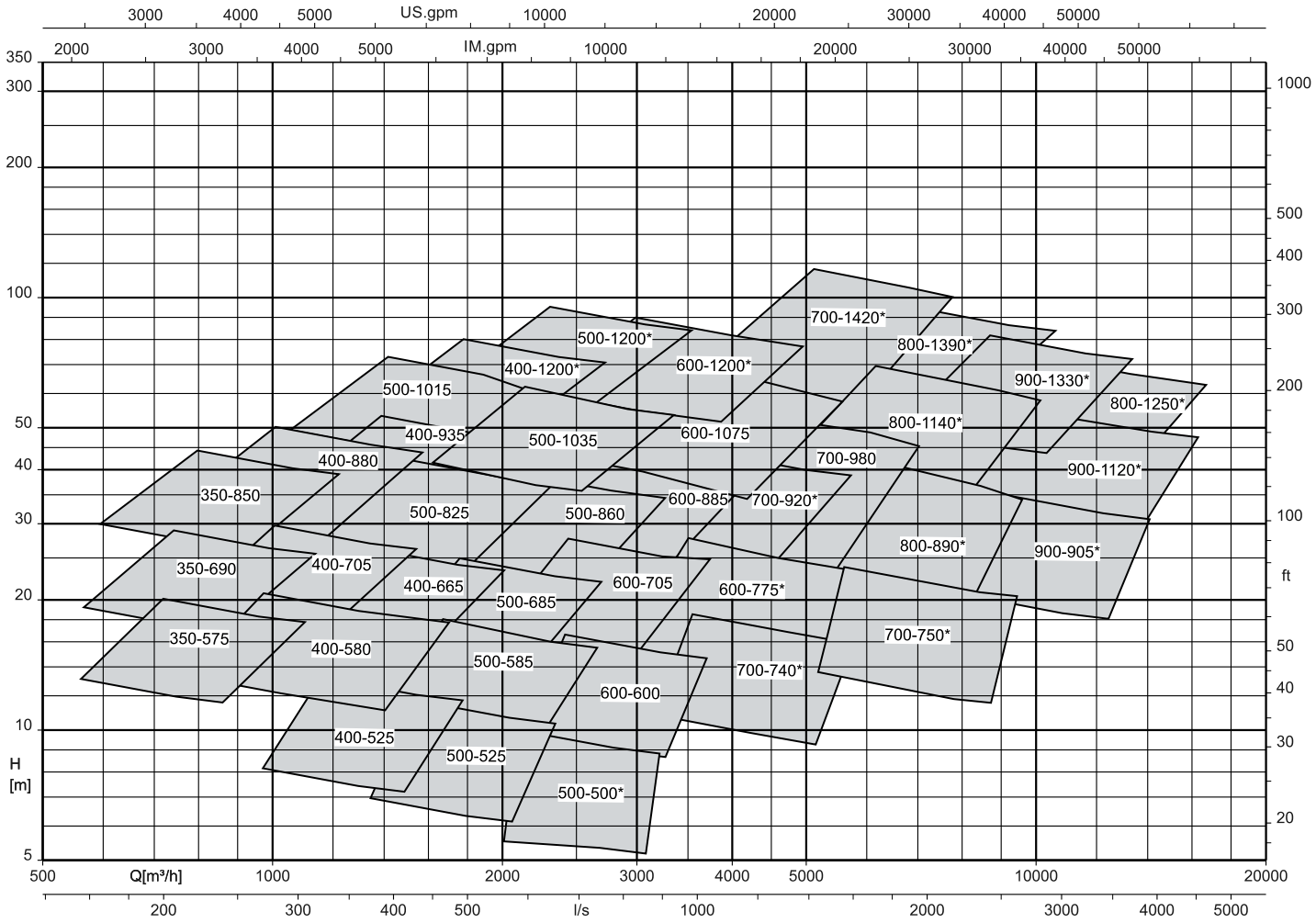

* New RDLO size

RDLO / RDLO V, n = 1780 rpm

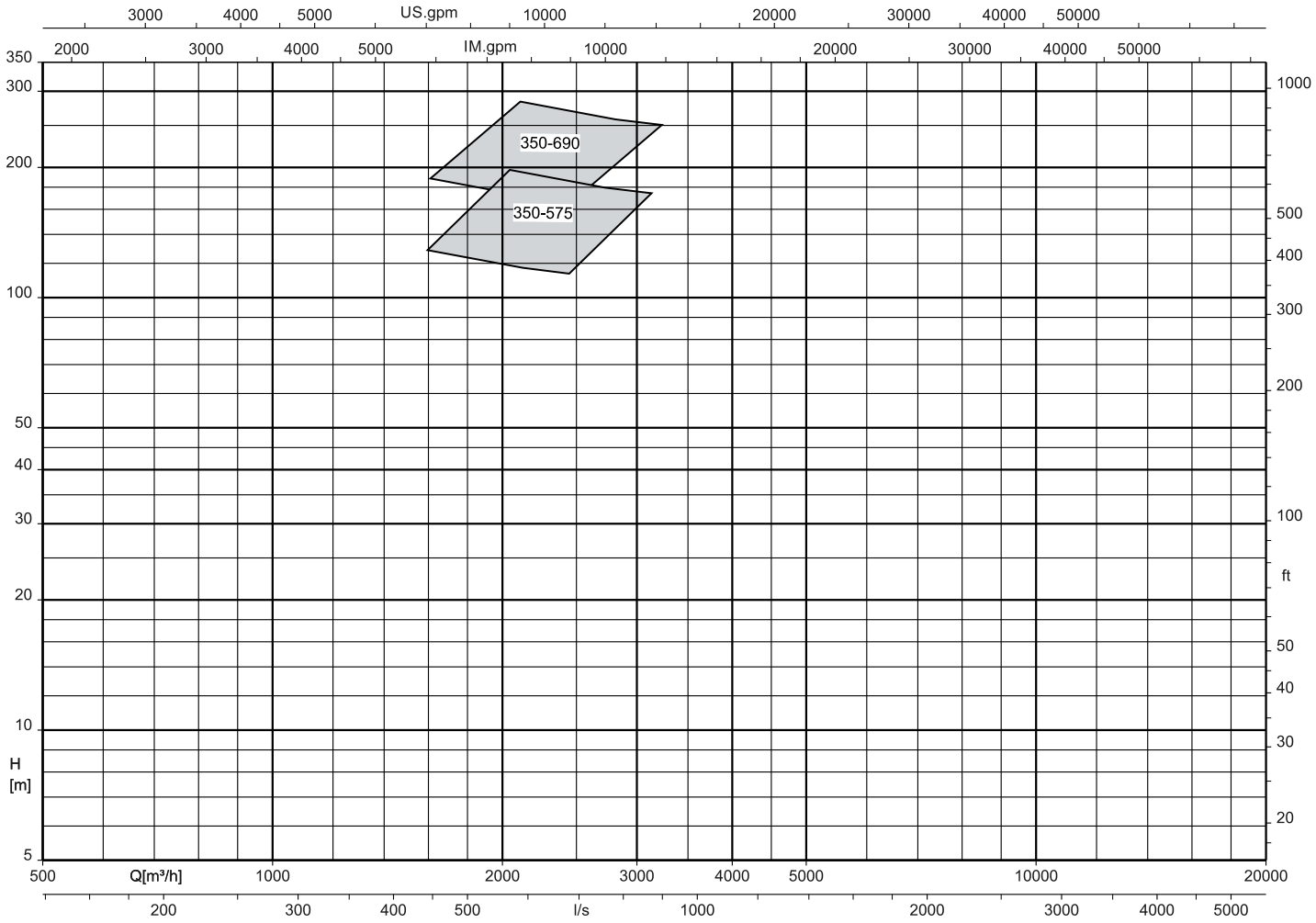

RDLO / RDLO V, n = 1180 rpm

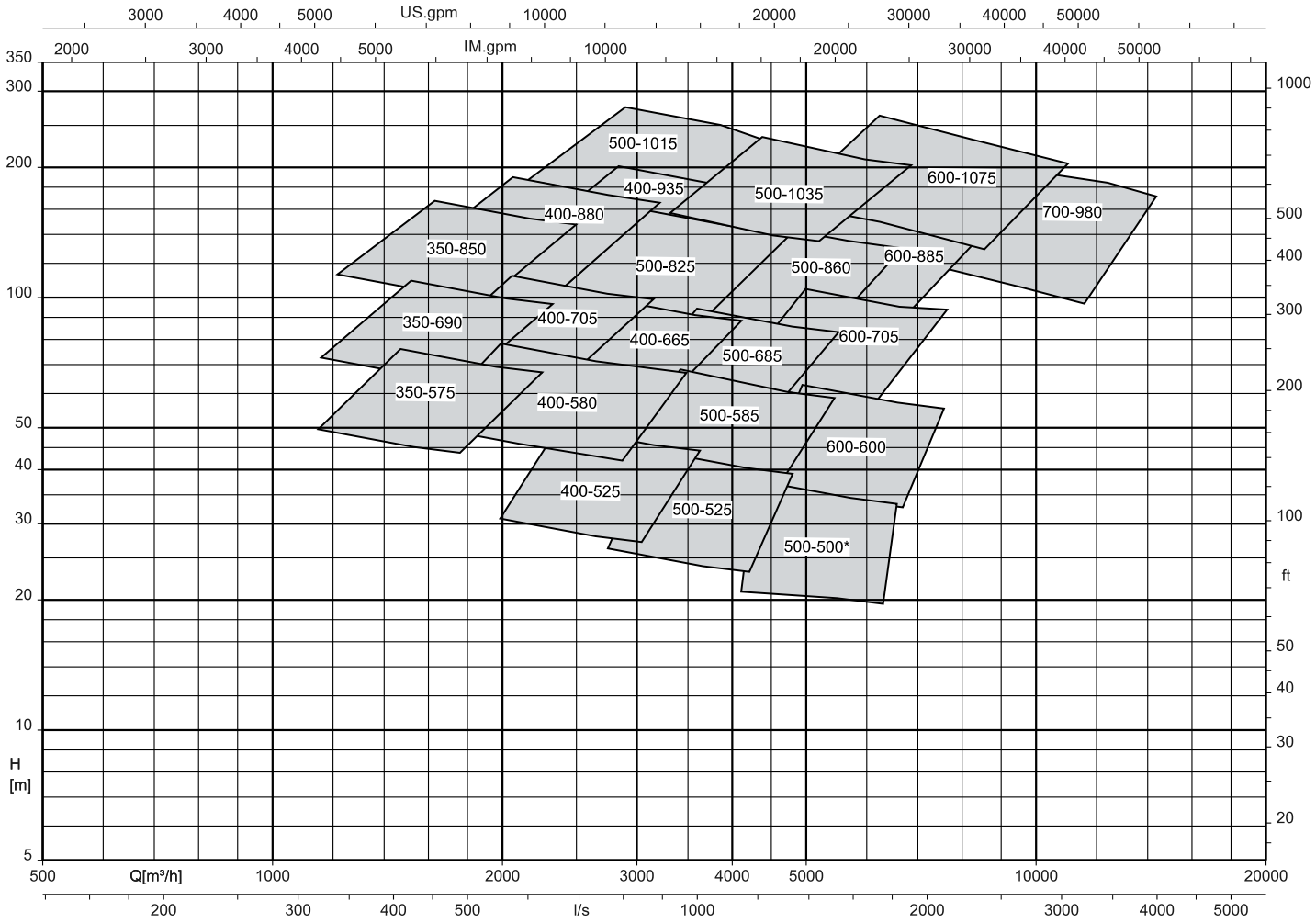

* New RDLO size

RDLO / RDLO V, n = 890 rpm

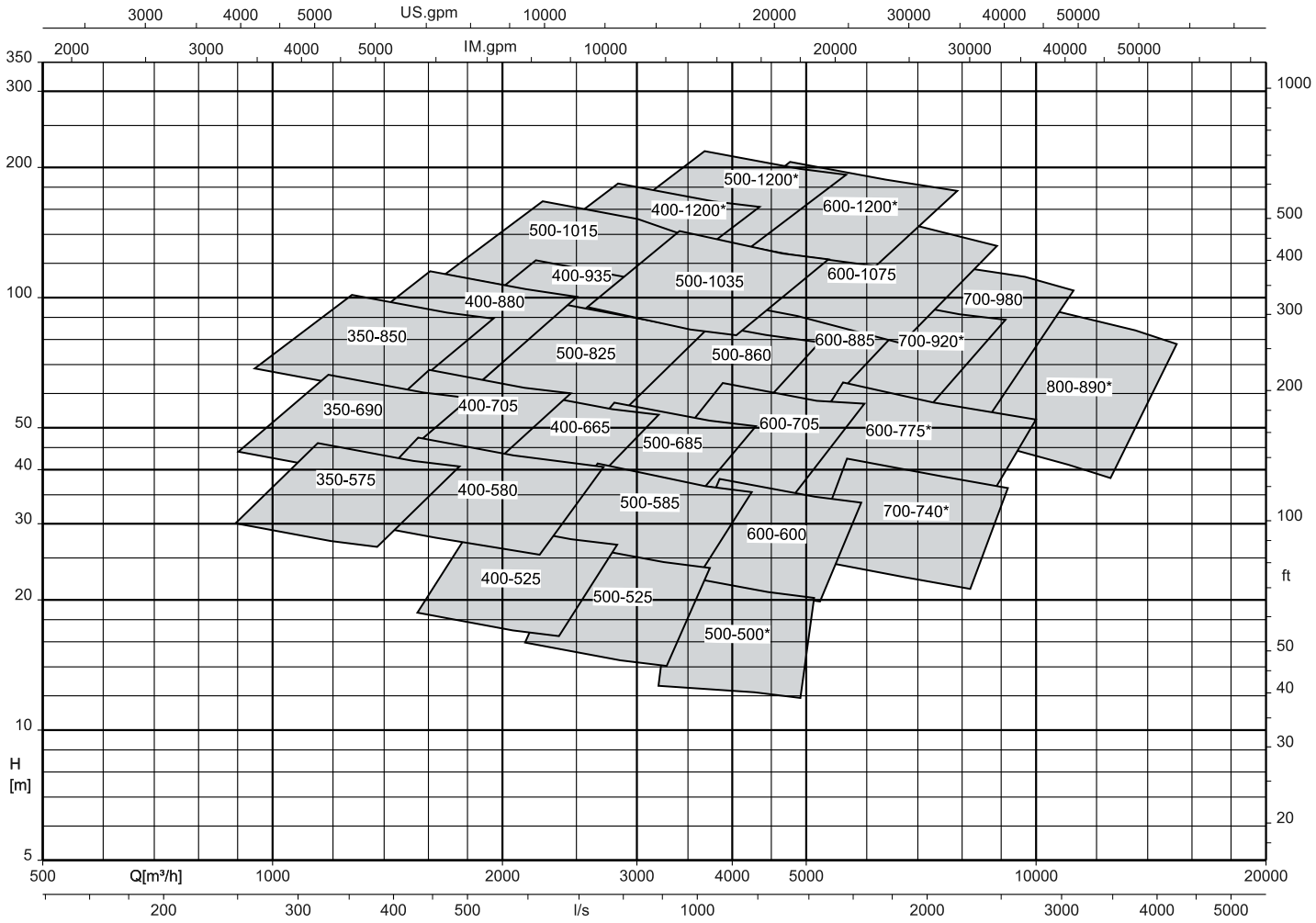

* New RDLO size

RDLO / RDLO V, n = 715 rpm

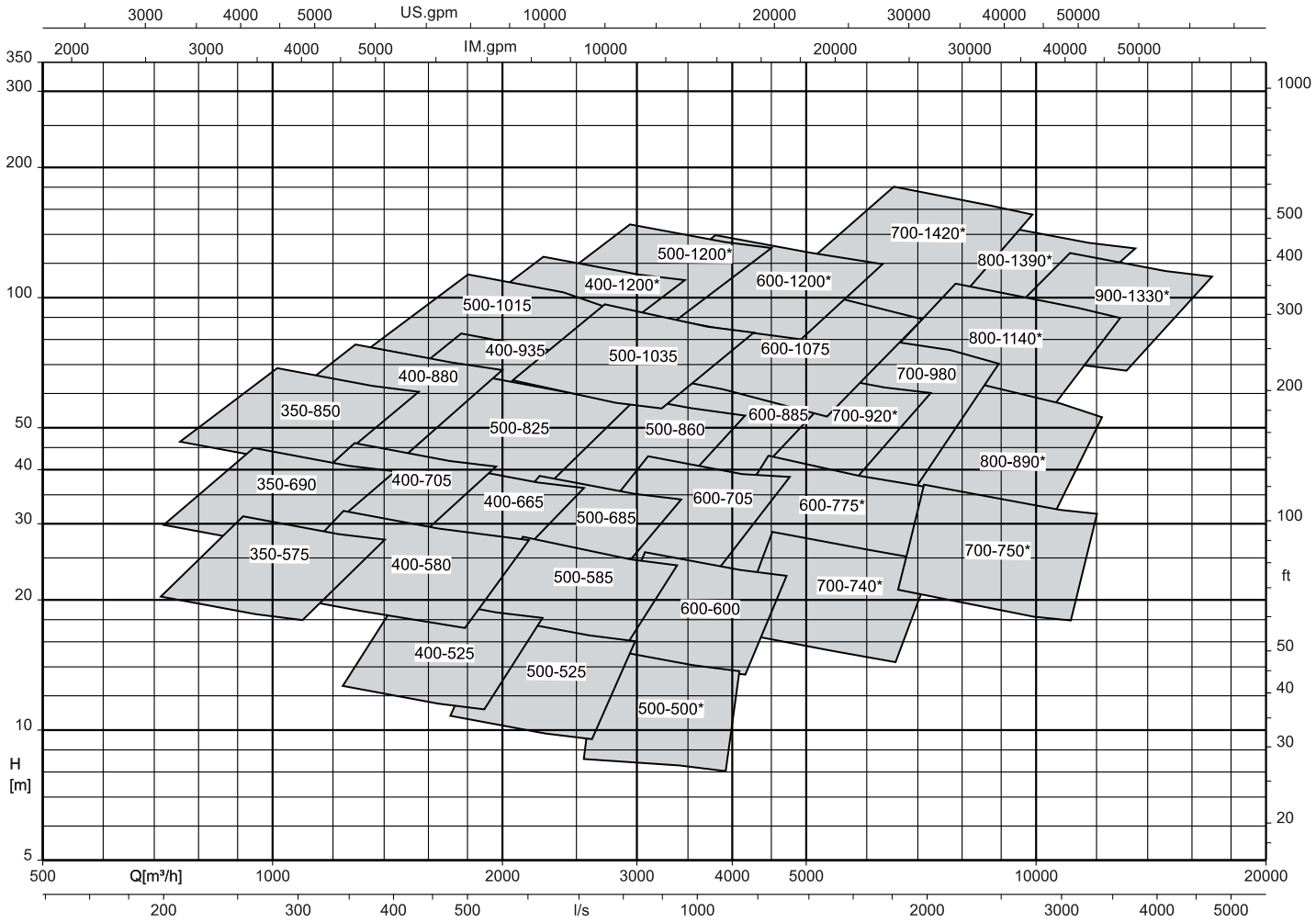

* New RDLO size

Installation types

Fig.0

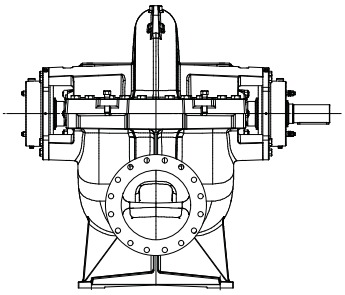

Fig. 1: Fig.0: Bare shaft pump

Options of installation parts:

- No optional equipment

Coupling options:

- Torsionally flexible 3-piece jaw coupling
- Torsion-resistant flexible disc coupling

Coupling guard options:

- Light-duty design, not tread-proof

Delivery/transport:

- Pump

2E

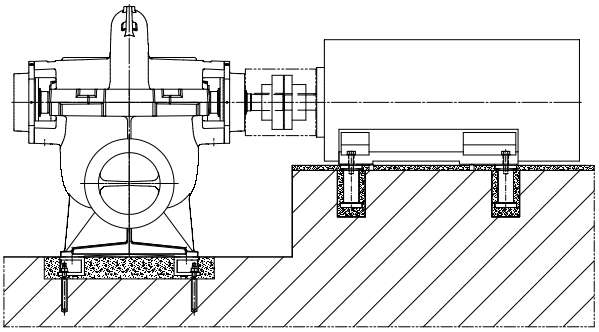

Fig. 2: 2E: pump and motor on foundation rails

Options of installation parts:

- Foundation rails for the pump, including chemical anchors, and foundation blocks for the motor
- Foundation rails for the pump, including chemical anchors

Coupling options:

- Torsionally flexible 3-piece jaw coupling
- Torsion-resistant flexible disc coupling with spacer

Coupling guard options:

- Light-duty design, not tread-proof

Delivery / transport:

- Pump and motor are supplied as separate units.

3E

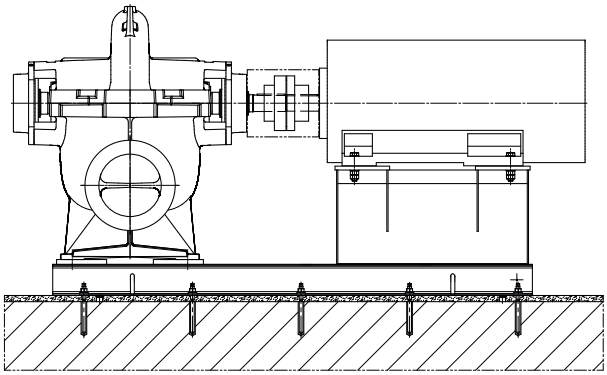

Fig. 3: 3E: Pump and motor on a common base frame

Options of installation parts:

- Base frame for pump and motor, including chemical anchors
- Special base frame for pump and motor, including chemical anchors

Coupling options:

- Torsionally flexible 3-piece jaw coupling
- Torsion-resistant flexible disc coupling with spacer[22)]

Coupling guard options:

- Light-duty design, not tread-proof
- Heavy-duty design, tread-proof

Delivery / transport:

- Pump, motor and base frame are supplied as separate units.

22 On request only

4E

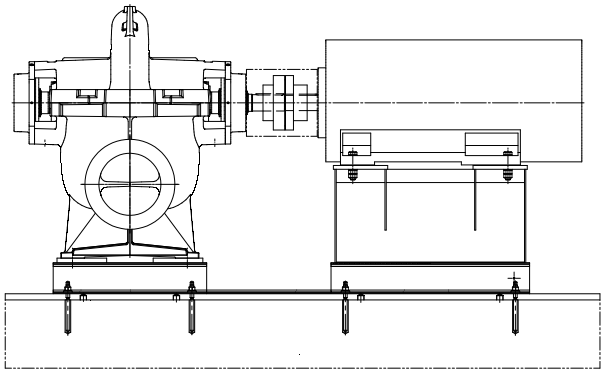

Fig. 4: 4E: Pump and motor on separate base frames

Options of installation parts:

- Base frame for the pump and base frame for the motor, including chemical anchors (without drip tray)
- Base frame for the pump, including chemical anchors (without drip tray)

Coupling options:

- Torsionally flexible 3-piece jaw coupling
- Torsion-resistant flexible disc coupling with spacer

Coupling guard options:

- Light-duty design, not tread-proof

Delivery / transport:

- Pump, motor and base frame are supplied as separate units.

DJ

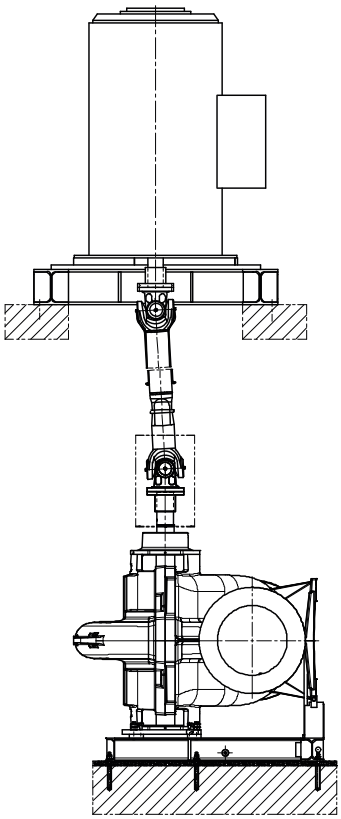

Fig. 5: DJ: Pump and motor on separate levels

Options of installation parts:

- Pump base frame (pump foot) including chemical anchors
- Pump base frame (pump foot) including chemical anchors, motor support frame, foundation rails and chemical anchors[23)]

Coupling options:

- Cardan shaft[23)]
- Coupling with spacer[23)]

Coupling guard options:

- Light-duty design, not tread-proof

Delivery / transport:

- Pump on corresponding pump base frame (pump foot), motor and motor support frame are supplied as separate units.

DP

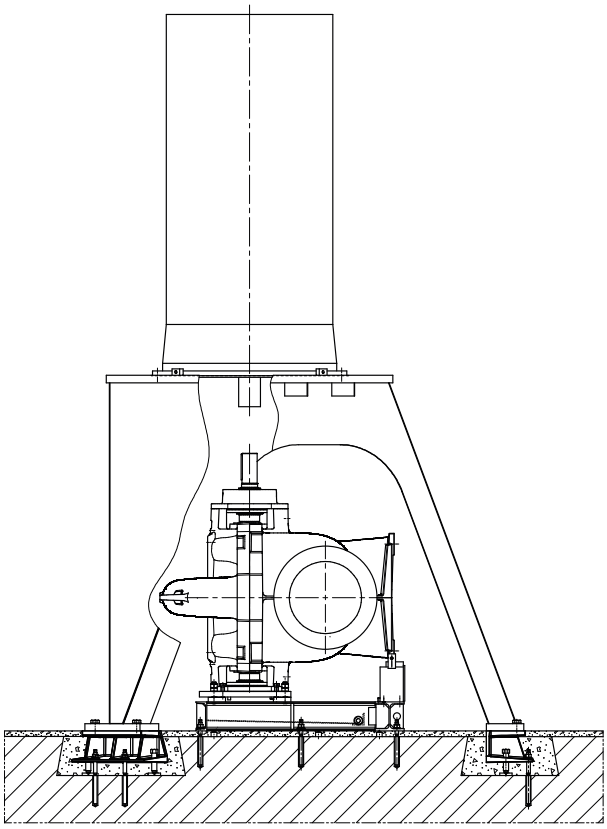

Fig. 6: DP: motor on separate drive lantern

Options of installation parts:

- Pump base frame (pump foot) including chemical anchors, and drive lantern (including foundation rails and chemical anchors)

Coupling options:

- Torsion-resistant flexible disc coupling with spacer

Coupling guard options:

- Light-duty design, not tread-proof

Delivery / transport:

- Pump with pump base frame (pump foot), motor and drive lantern supplied as individual units

23 On request only

Scope of supply

Depending on the model, the following items are included in the scope of supply:

- Pump
- Drive
- Baseplate
- Coupling
- Coupling guard
- Universal-joint shaft
- Fasteners for pump and base frame

Optional accessories:

- Vibration monitoring equipment
- Pt100 resistance thermometer
- Constant level oiler
- Pressure gauge
- Measuring nipple for shock pulse measurement
- Cyclone

1387.5/10-EN

General arrangement drawings with list of components

Horizontal installation (example)

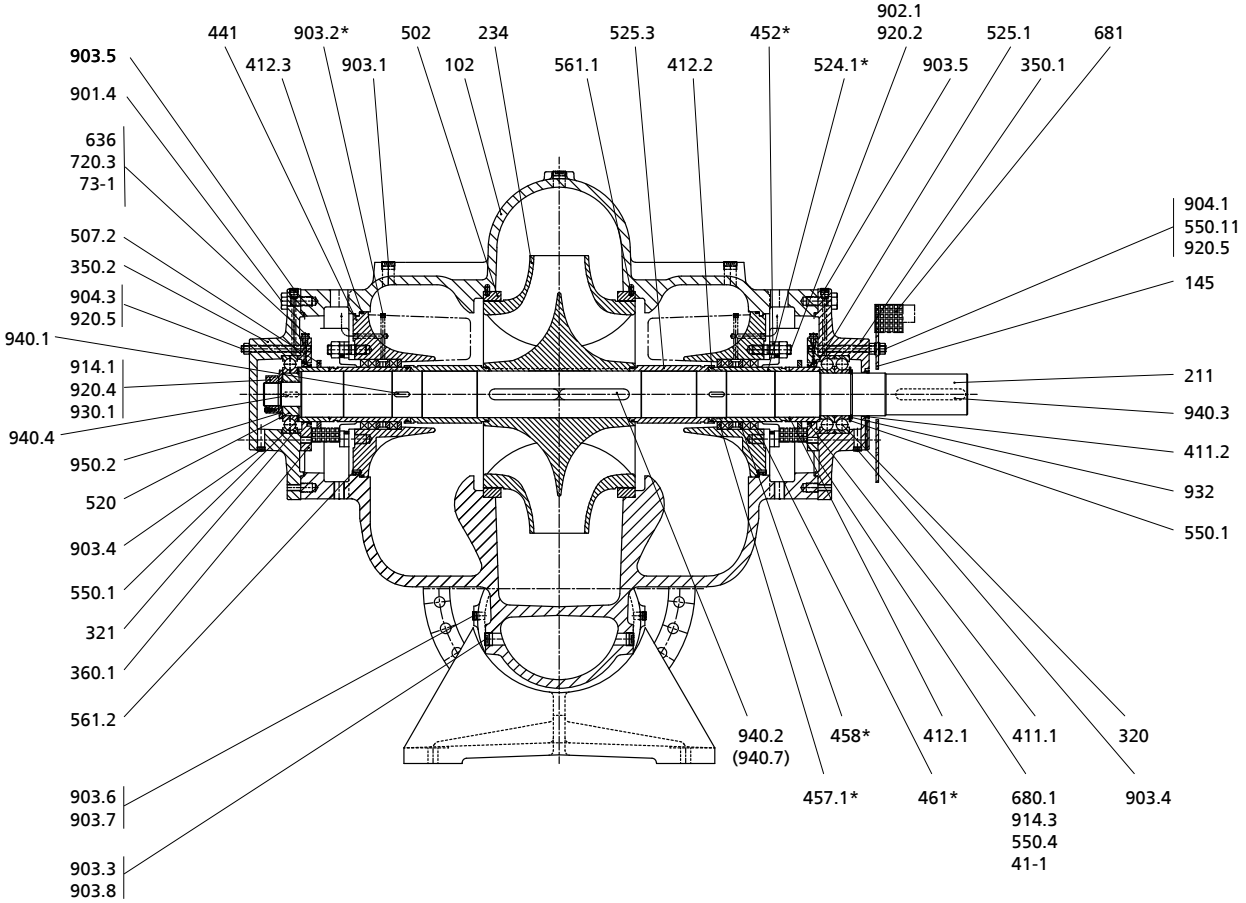

Fig. 7: Horizontal installation: * = only for pump sets with gland packing for pump discharge pressure < 7 bar [99.5 psi]

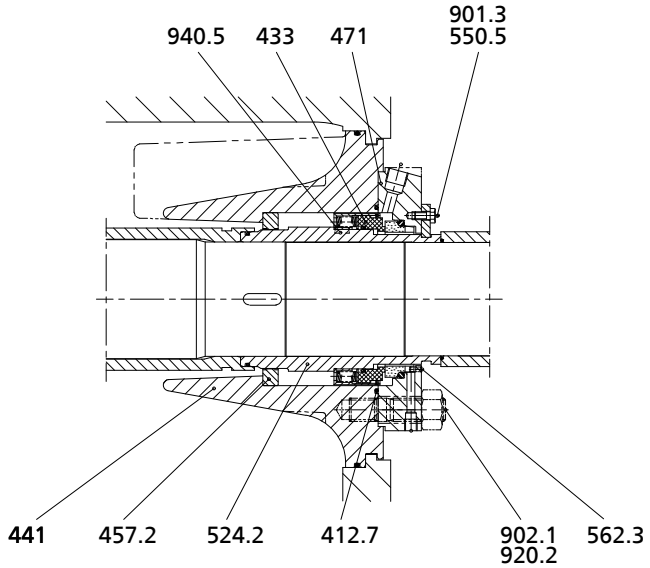

Detailed view: mechanical seal

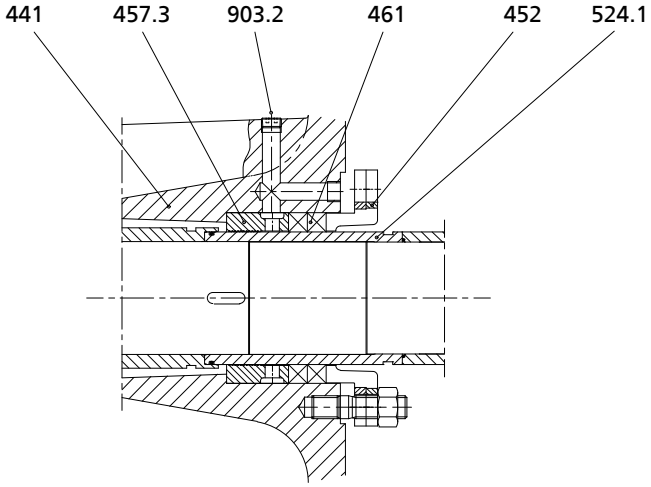

Detailed view: gland packing, pump discharge pressure ≥ 7 bar [99.5 psi]

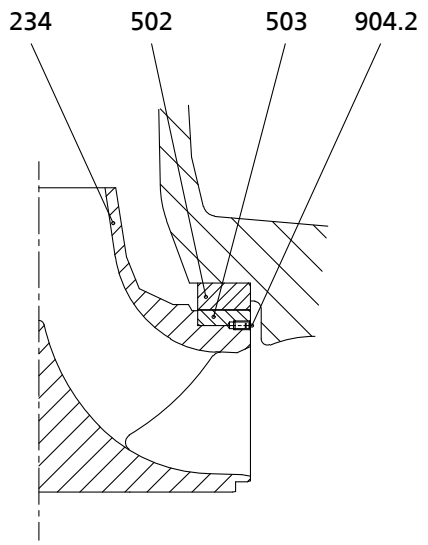

Detailed view: impeller with impeller wear ring

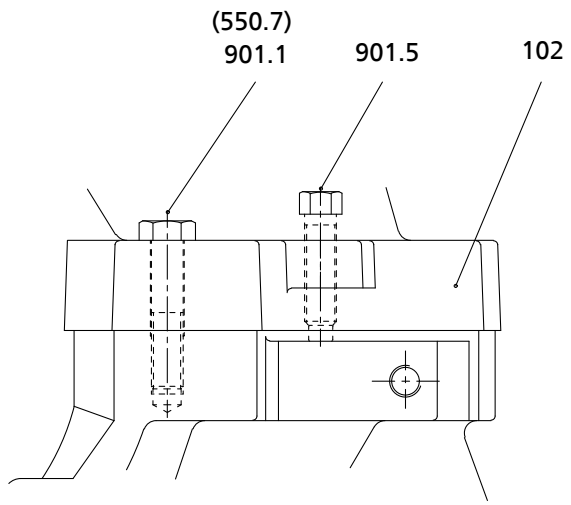

Detailed view: screwed connection of the casing split flange

Table 10: List of components

Part No.	Description	Part No.	Description
102	Volute casing	520	Sleeve
145	Adapter	524.1/.2	Shaft protecting sleeve
211	Pump shaft	525.1/.3	Spacer sleeve
234	Impeller	550.1/.4/.5/.7/.11	Disc
320	Rolling element bearing	561.1/.2	Grooved pin
321	Radial ball bearing	562.3	Parallel pin
350.1/.2	Bearing housing	636	Lubricating nipple
360.1	Bearing cover	680.1	Guard
41-1	Sealing washer	681	Coupling guard
411.1/.2	Joint ring	73-1	Socket
412.1/.2/.3/.7	O-ring	720.3	Spacer
433	Mechanical seal	901.1/.3/.4/.5	Hexagon head bolt
441	Shaft seal housing	902.1	Stud
452	Gland follower	903.1/.2/.3/.4/.5/.6/.7/.8	Screw plug
457.1/.2/.3	Neck ring	904.1/.2/.3	Grub screw
458	Lantern ring	914.1/.3	Hexagon socket head cap screw
461	Gland packing	920.2/.4/.5	Nut
471	Seal cover	930.1	Safety device
502	Casing wear ring	932	Circlip
503	Impeller wear ring	940.1/.2/.3/.4/.5/.7	Key
507.2	Thrower	950.2	Spring

Vertical installation (example)

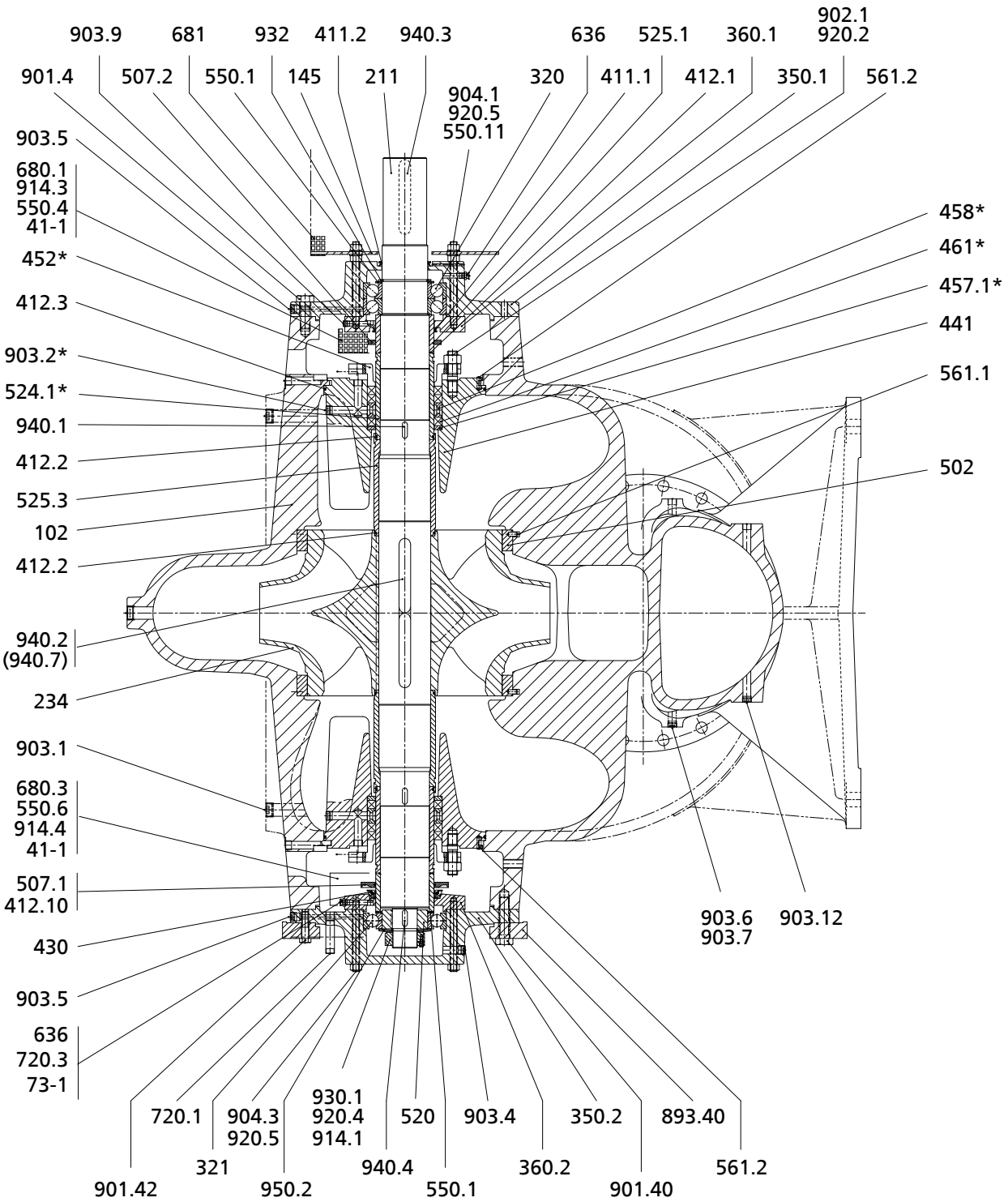

Fig. 8: Vertical installation: * = only for pump sets with gland packing for pump discharge pressure < 7 bar [99.5 psi]

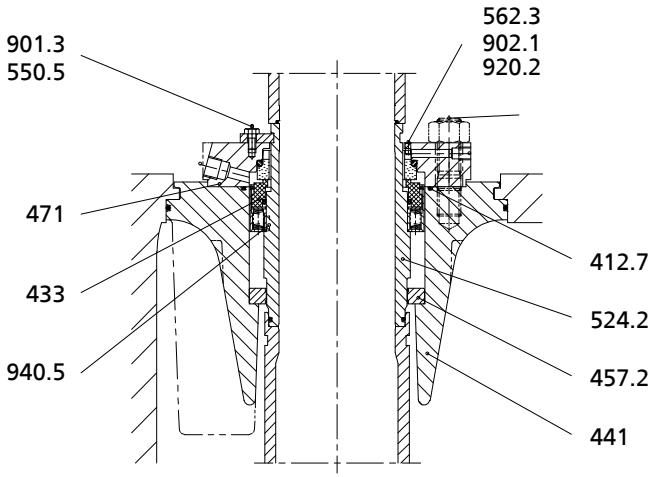

Detailed view: mechanical seal

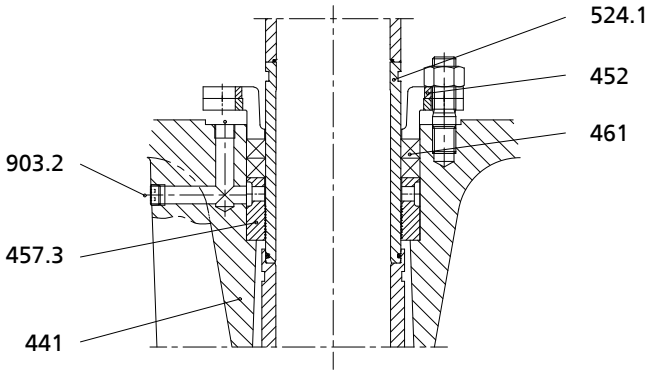

Detailed view: gland packing, pump discharge pressure ≥ 7 bar [99.5 psi]

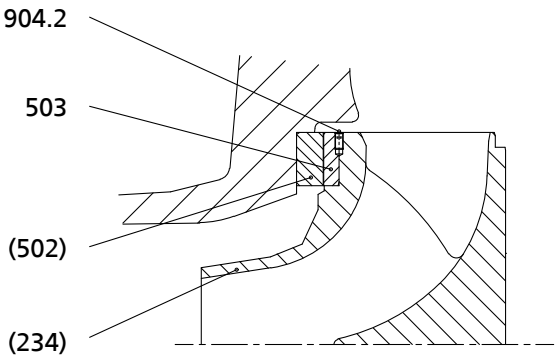

Detailed view: impeller with impeller wear ring

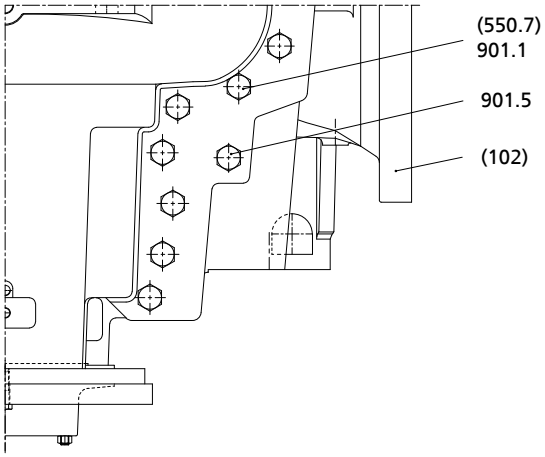

Detailed view: connecting elements of the volute casing

Table 11: List of components

Part No.	Description	Part No.	Description
102	Volute casing	520	Sleeve
145	Adapter	524.1/.2	Shaft protecting sleeve
211	Pump shaft	525.1/.3	Spacer sleeve
234	Impeller	550.1/.4/.5/.6/.7/.11	Disc
320	Rolling element bearing	561.1/.2	Grooved pin
321	Radial ball bearing	562.3	Parallel pin
350.1/.2	Bearing housing	636	Lubricating nipple
360.1/.2	Bearing cover	680.1/.3	Guard
41-1	Sealing washer	681	Coupling guard
411.1/.2	Joint ring	73-1	Socket
412.1/.2/.3/.7/.10	O-ring	720.1/.3	Spacer
430	Shaft seal	893.40	Soleplate
433	Mechanical seal	901.1/.3/.4/.5/.40/.42	Hexagon head bolt
441	Shaft seal housing	902.1	Stud
452	Gland follower	903.1/.2/.4/.5/.6/.7/.9/.12	Screw plug
457.1/.2/.3	Neck ring	904.1/.2/.3	Grub screw
458	Lantern ring	914.1/.3/.4	Hexagon socket head cap screw
461	Gland packing	920.2/.4/.5	Nut
471	Seal cover	930.1	Safety device
502	Casing wear ring	932	Circlip
503	Impeller wear ring	940.1/.2/.3/.4/.5/.7	Key
507.1/.2	Thrower	950.2	Spring

2024-04-01

1387.5/10-EN

LENNTECH
WATER TREATMENT SOLUTIONS
info@lenntech.com Tel. +31-152-610-900
www.lenntech.com Fax. +31-152-616-289

KSB