LENNTECH
WATER TREATMENT SOLUTIONS

KSB

# RPHb – Single-suction, Two-stage Heavy-duty BB2 Process Pump

**Applications:**

- Refineries
- Petrochemical and chemical industries
- Onshore and offshore processes

**More information: www.ksb.com**

# RPHb – Single-suction, Two-stage Heavy-duty BB2 Process Pump to API 610 / ISO 13709

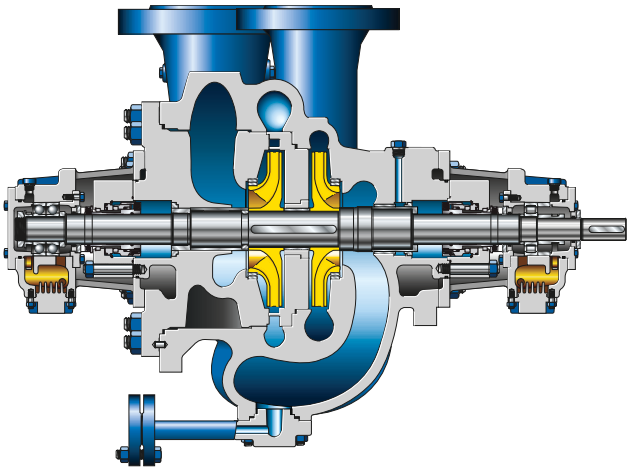

### Robust design for longer service life

- Process pump in heavy-duty design to API 610
- Optimised pressure boundary and hydraulic system with reinforced optimised shaft

### Wide range of variants for a broad application range and optimum adaptation to the system

- Numerous flange designs
- Large choice of materials
- Coolable/heatable seal housing
- Various bearing lubrication variants

### Long service life and high reliability of the bearings

- Heavy-duty paired 40° angular contact ball bearings
- Diffuser design and impellers in back-to-back arrangement
- Standard version with oil ring lubrication and labyrinth seals
- Version with hydrodynamic bearings for higher energy density

### Lower operating costs and higher system availability

- Comprehensive hydraulic selection chart for optimum selection
- Better efficiencies and NPSH values than OH2 pumps
- No need for a separate cooling circuit; integrated cooling fins and optional fan impeller ensure optimum cooling of the bearing brackets.

### Ease of service

- Easy to monitor and service due to top-top flange arrangement
- Suction-side casing cover simplifies rotor removal.
- Straightforward servicing due to mechanical seals to API 682 (cartridge design)
- Replaceable casing and impeller wear rings
- Modular design system reduces spare parts stock.

**Materials**

S5, S6, S8, C6, A8, D1, D2 and special materials

| Technical data | 50 Hz | 60 Hz |
|---|---|---|
| Max. flow rate | 2100 m³/h / 9246 US gpm | 1900 m³/h / 8365 US gpm |
| Max. head | 680 m / 2231 ft | 800 m / 2625 ft |
| Max. temperature | -80 °C to +450 °C / -112 °F to 842 °F | |
| Max. pressure | 100 bar / 1450 psi | |
| Nominal diameter | 80-300 mm / 3-12 in | |

Other values on request

LENNTECH
WATER TREATMENT SOLUTIONS
info@lenntech.com Tel. +31-152-610-900
www.lenntech.com Fax. +31-152-616-289

KSB

1321.028/05-EN / 03.24 / © KSB SE & Co. KGaA 2024 · Subject to technical modification without prior notice