RWCP, RWCN

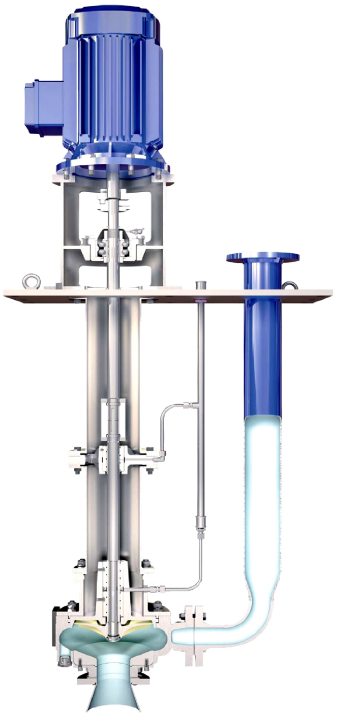

Vertical pumps for tanks
for loaded liquids

1. Fields of Application

RWCP and RWCN are vertical, centrifugal pumps designed for wells, ditches and tanks. For neutral or aggressive liquids with significant solid content.

The RWCP and RWCN Series of KSB ITUR may pump a wide range of fluids and applications, such as:

- Water with sand
- Water with mill scale
- Drain water
- Sea water with cinder
- Sewage water
- Canal water
- Chemical sludges
- Hydrocarbons

2. Operating Data

		50 Hz	60 Hz
Capacity, max.	[m^3/h]	700	890
Head, max.	[m]	100	95
Operating temp., max.	[ºC]	100	100
Operating temp., min.	[ºC]	-10	-10
Operating pressure, max.	[bar]	16	16
Operating speed, max.	[rpm]	3000	3600
Max. length of submerged pipe	[mm]	5785	5785

For any specific application beyond these limits, please consult KSB ITUR. All data given in this document are for fully standard construction

3. Design

Volute pump casing with axial suction and radial impulsion. Three variants of single stage impeller: semi-open (A), channel (C) or vortex (V).

The RWCP is equipped with a discharge pipe to the outside of the base plate.

Pump is for vertical installation in non pressurized tanks as standard. Special executions for very low pressurized tanks are available on demand.

4. Designation

RWCP 100 / 250 V

- RWCP: Type series
  - RWCP, with discharge pipe
  - RWCN, without discharge pipe
- 100: DN discharge nozzle at pump casing [mm]
- 250: DN impeller [mm]
- V: Impeller type:
  - A (semi-open)
  - C (channel)
  - V (vortex)…

5. Materials

		Material variant			
Denomination	**Ref.**	**00**	**02**	**05**	**12**
Volute Casing	**102**	JL1040 (1)	JL1040 (1)	CF8M (2)	JL1040 (1)
Pump Cover	**161**	JL1040 (1)	JL1040 (1)	CF8M (2)	JL1040 (1)
Pump shaft(s)	**211, 212**	F-114 (3)	F-114 (3)	AISI-316L (4)	F-114 (3)
Impeller	**230**	JL1040 (1)	CF8M (2)	CF8M (2)	CA6NM (5)
Pedestal	**341**	JL1040 (1)	JL1040 (1)	JL1040 (1)	JL1040 (1)
Wear Rings	**502**	JL1040 (1)	JL1040 (1)	CF8M(2)	CA6NM (5)
Shaft Sleeve	**520**	AISI-431B (6)	AISI-431B (6)	AISI-316L (4)	AISI-431B (6)
Friction Bearing bush	**545**	TFM (7)	TFM (7)	TFM (7)	TFM (7)
Discharge Pipe	**711**	St 37.0	St 37.0	AISI-316L (4)	St 37.0
Intermediate pipe	**712**	St 37.0	St 37.0	AISI-316L (4)	St 37.0
Base Plate	**890**	F-111 (8)	F-111 (8)	F-111 (8)(9)	F-111 (8)

(1) Grey cast iron to EN 1561 = GJL-250
(2) Cast chrome nickel molybdenum steel 1.4408
(3) Tempering steel = C45
(4) Hot Rolled chrome nickel molybdenum steel 1.4435
(5) Cast chrome steel 1.4313
(6) Chrome nickel steel 1.4057
(7) Special PTFE, Graphite charged
(8) Steel = C15
(9) Under request special variant with stainless steel base plate can be supplied

6. Components

6.1 Shaft Seal

Lip seal is supplied as standard. Single mechanical seal (cartridge or non cartridge) or packing can be supplied as options.

6.2 Drive

IEC frame electric motor IM V1.

6.3 Bearings / Lubrication

External angular contact ball bearings, grease lubricated, with external grease nipples, in a bearing bracket above the plate.

TFM (Special PTFE, Graphite charged) product lubricated friction bearing bushes in pump cover and intermediate column bearing supports. In case of poor lubricant, abrasives or solids, an external suitable fluid (e.g. fresh clean water) must be provided. Optionally an electric driven grease pump can be supplied.

6.4 Coupling

Flexible, rubber plug type coupling. Other types, upon request.

Coupling Guard: Transparent plastic protections are supplied as standard. Metallic protections can be supplied as option.

6.5 Base Plate

Standard base plate is rectangular shaped, and non sealing design. Circular base plate can be supplied as option

Circular base plate version

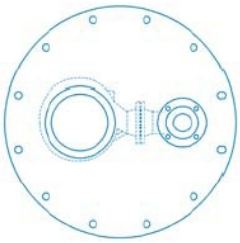

Where tank sealing is needed, blind flange shaped plates, with special bearing bracket and mechanical seal can be supplied as option.

7. Certification - ATEX

Certified quality management according to ISO-9001.

This series can be supplied as ATEX (94/9/EC) compliant.

8. Range Charts

Pump with semi-open impeller (A)
50 Hz

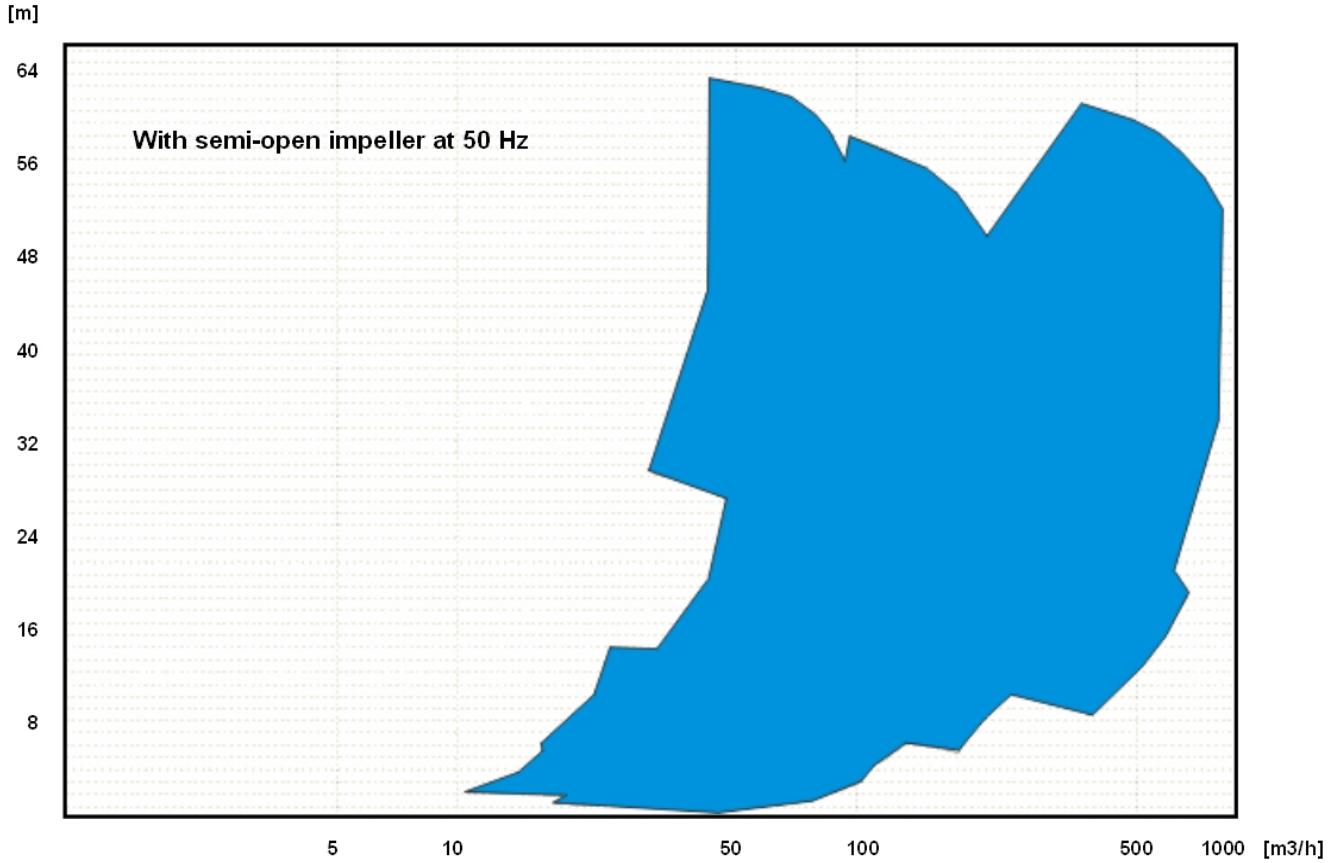

60 Hz

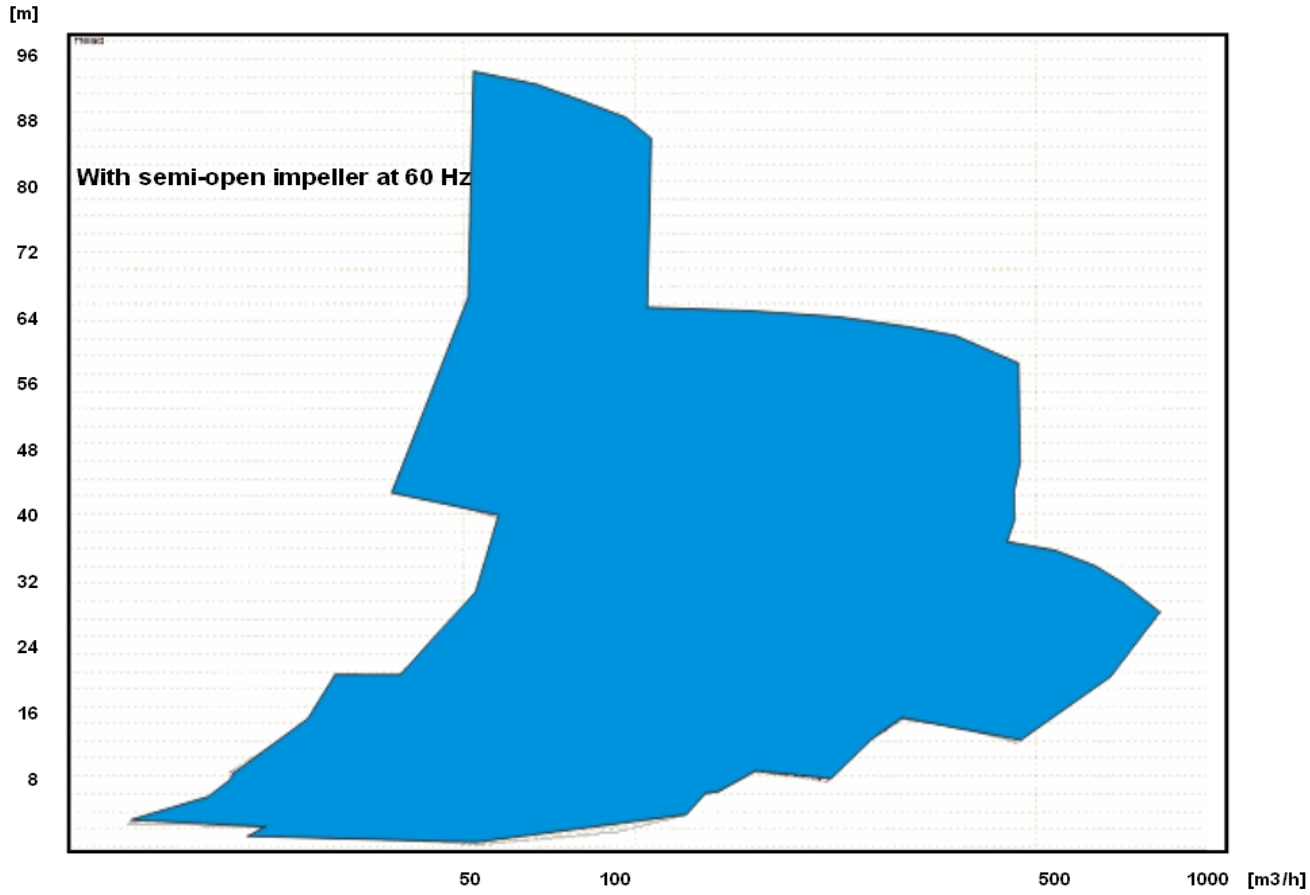

Pump with channel impeller (C)
50Hz

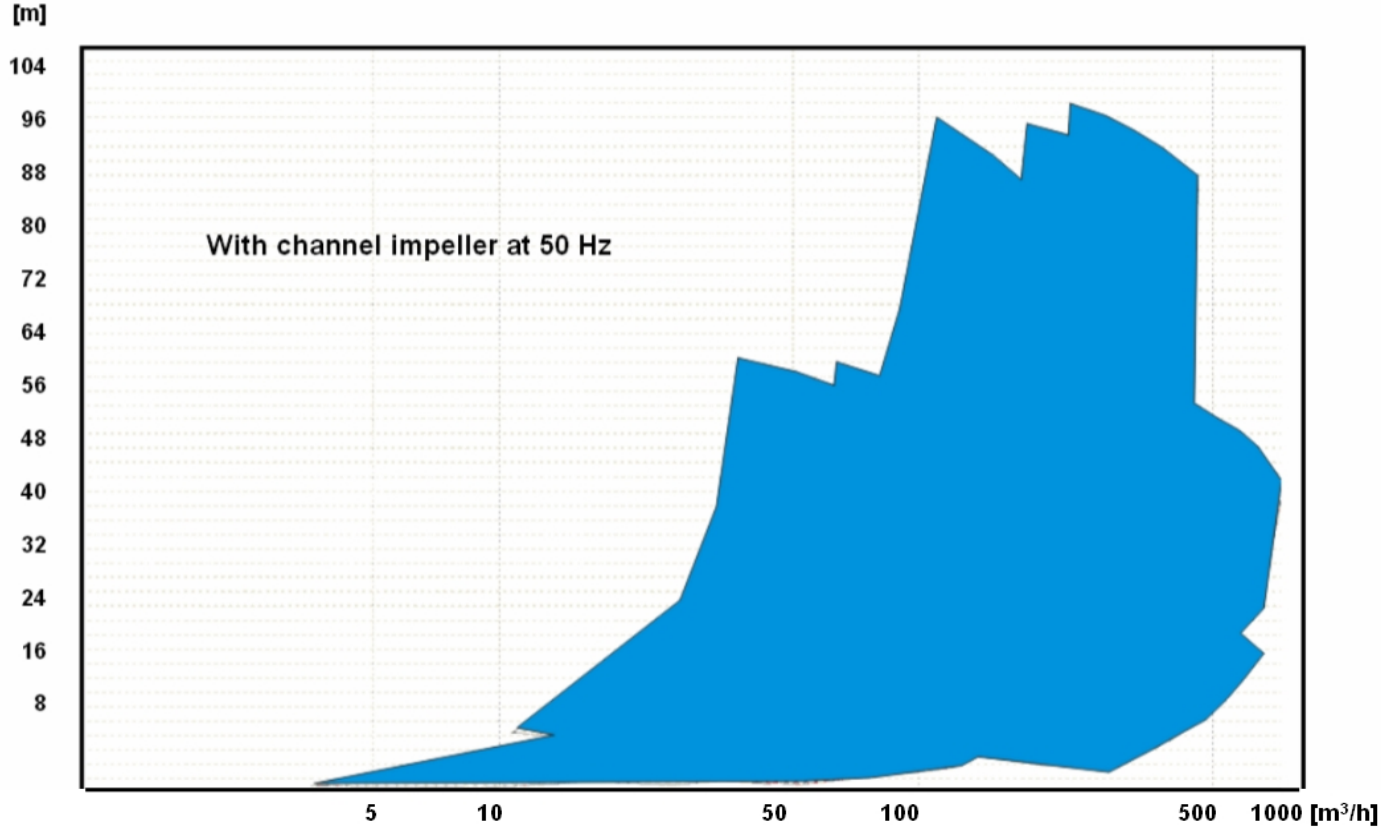

60Hz

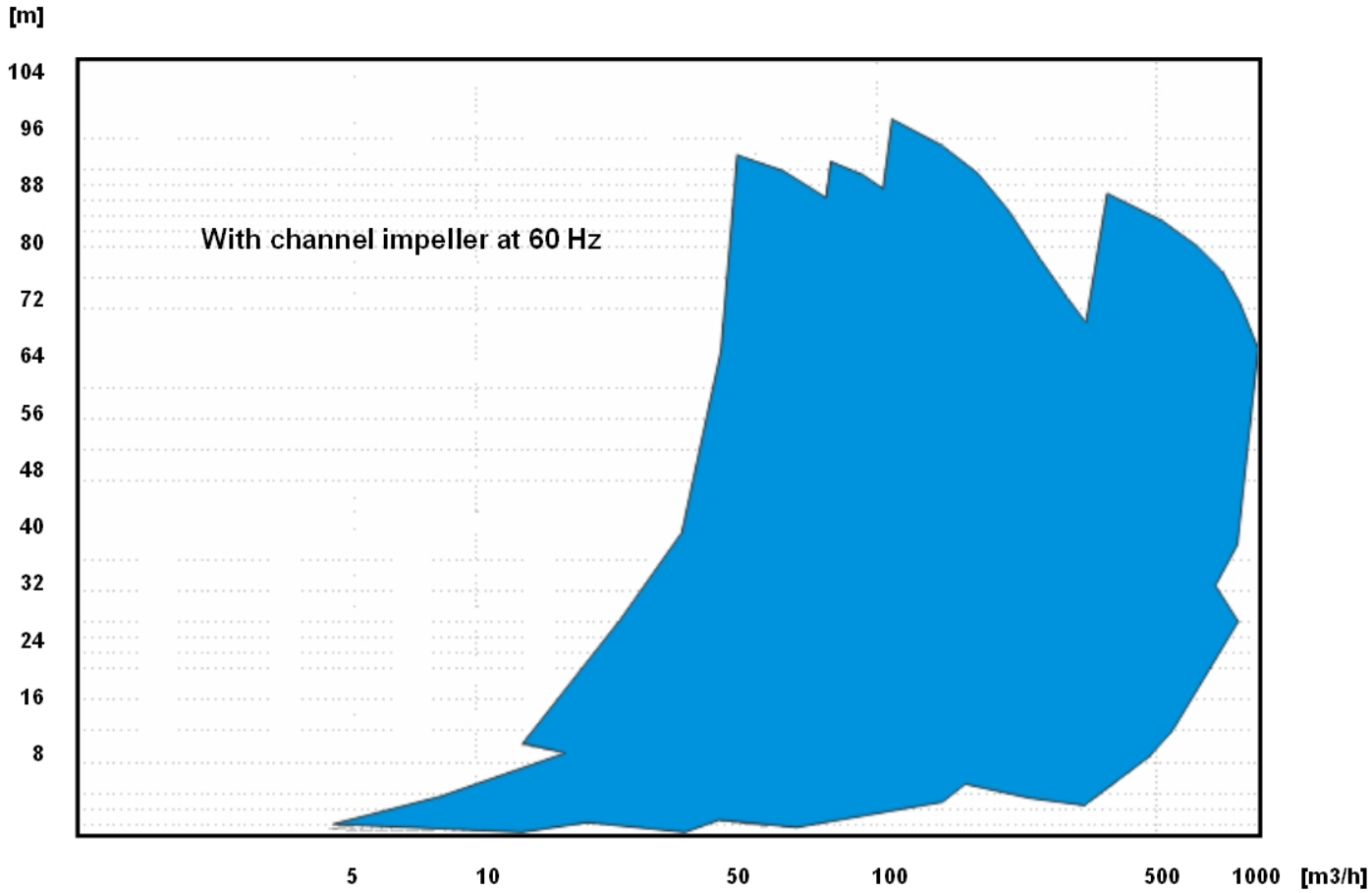

Pump with vortex impeller (V)
50 Hz

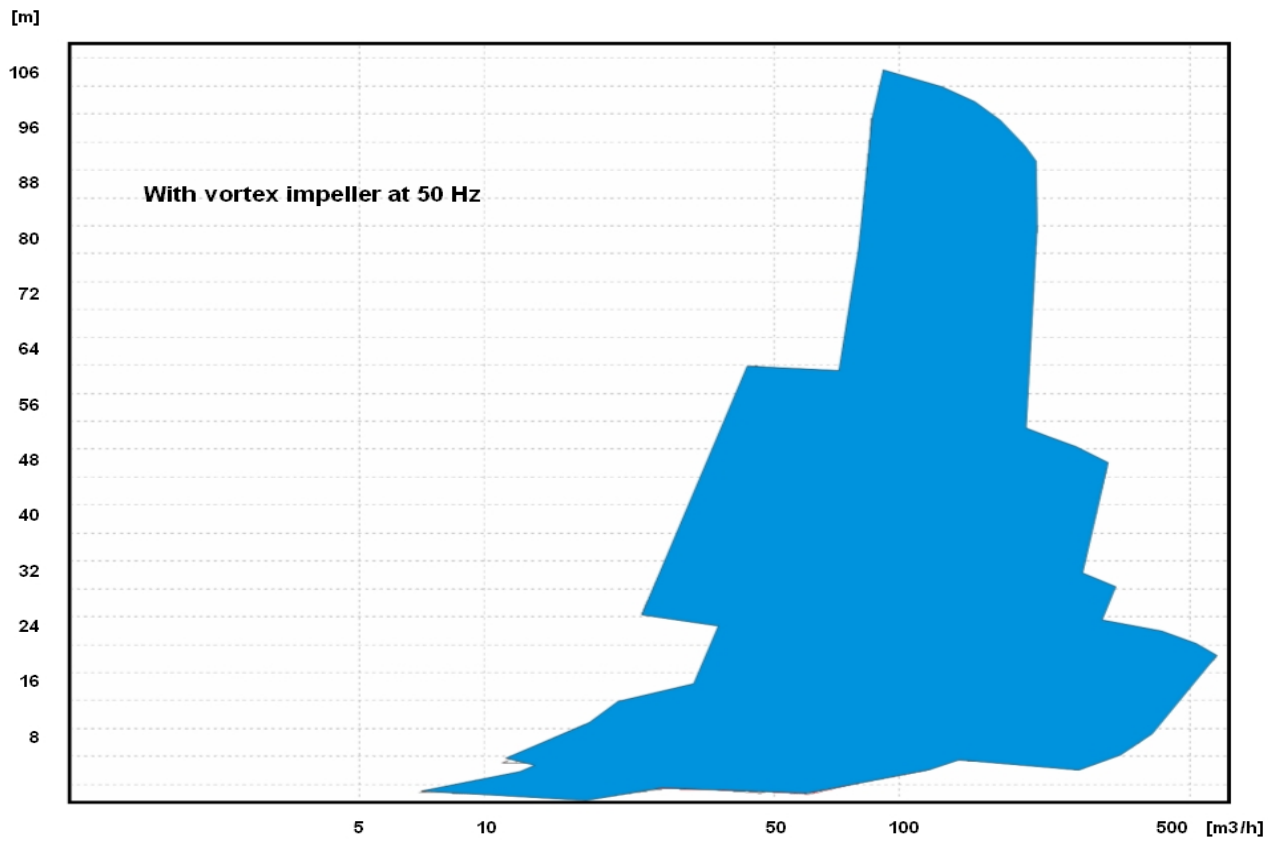

60 Hz

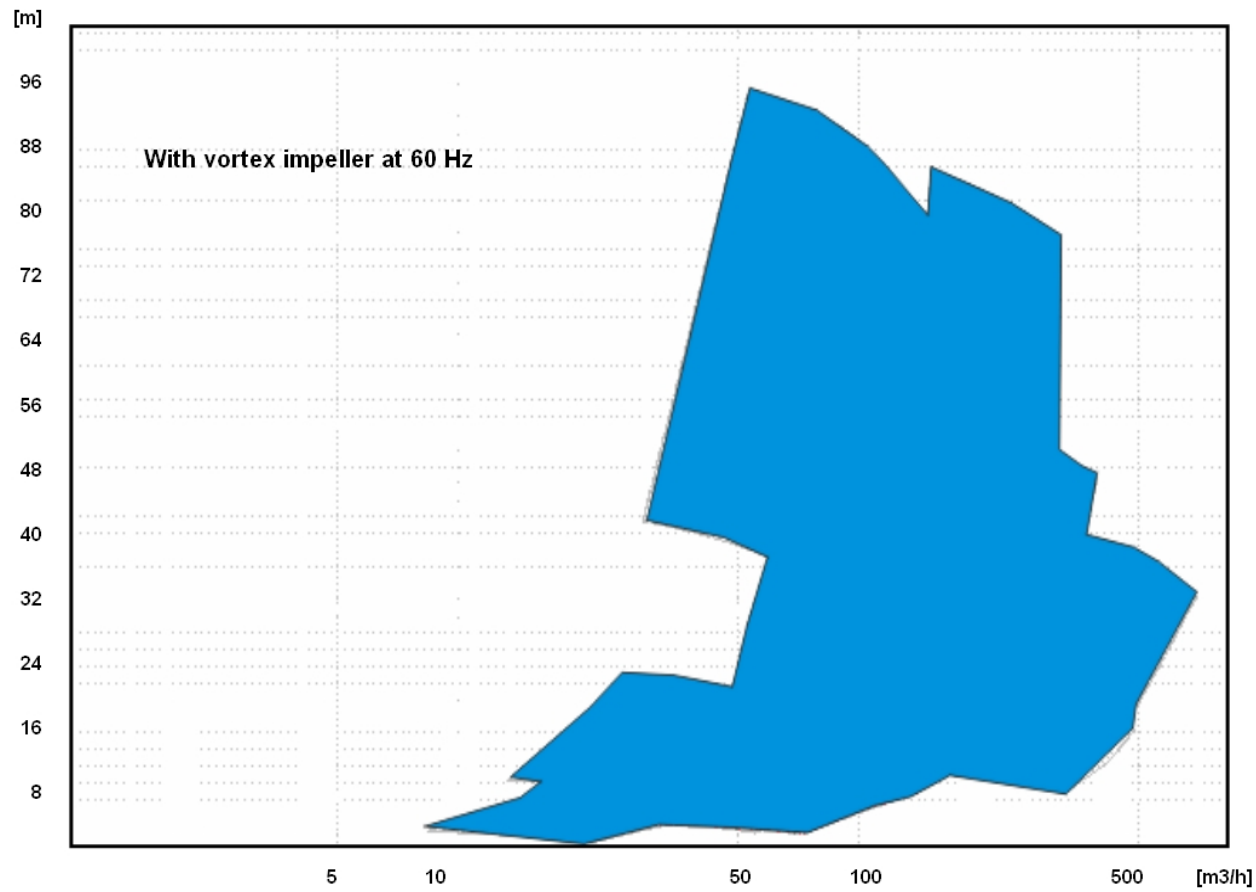

9. Benefits at a Glance

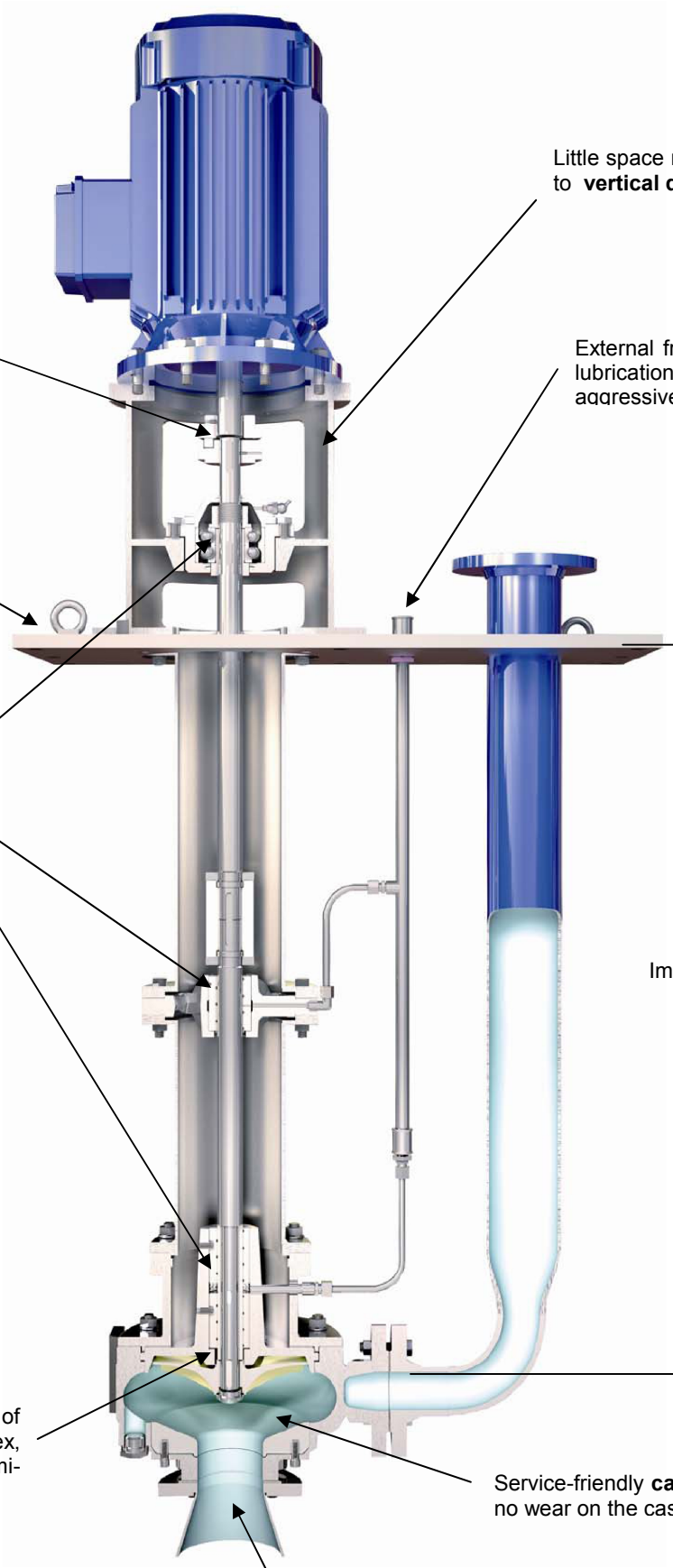

Flexible coupling allows easy motor mounting and avoids transmission of pump stresses into the motor

Little space required thanks to **vertical design**

External friction bearing bush lubrication in case of aggressive liquid pumped

Base plate is used as tank cover and for mounting the pump

Over Dimensioned bearings for reliable long service

Variable Immersion depth

Wide variety of applications due to a wide range of pump materials and variants, e.g. external plain bearing clean flushing

Three different kind of impeller, vortex, channel and semi-open.

Service-friendly **casing wear rings**, no wear on the casing / impeller

Suction bell allows big particles be suctioned.

10. Technical data

	Units	SEMI-OPEN IMPELLER "A" PUMP SIZE							
		50/200A	80/250A	65/315A	80/400A	100/400A	150/315A	150/500A	200/400A
General									
Impeller outlet width	[mm]	28	36	20	28	35	65	57	78
Impeller eye section	[cm2]	33	79	50	113	123	177	177	314
Max. & min. Impeller Ø	[mm]	See individual curve							
Maximum solid size	[mm]	24	32	16,5	24	34	61	53	74
% of solids	%	≤ 3%							
Sand contents	[g/l]	≤ 4 g/l							
Shaft Ø									
Pump end	[mm]	27		35	47			52	
Under ball bearings	[mm]	35			50			58	
At flexible coupling	[mm]	32			48			55	
Bearings									
Ball bearings (above base plate)		2 x 7307	2 x 7310		(1)			2 x 7314 + 6314	
Friction bearing bush (pump)		2 x 40/03	2 x 40/02	2 x 55/01	2 x 65/01				
Friction bearing bush (2) (column)		40/02			2 x 55/01			2 x 65/01	
Alowable motor frame		See "Dimensions per motor size" paragraph							
Drive rating	[P/n]	0,027		0,06	0,156			0,213	
External lubrication (per bearing) for friction bearing bushes	[l/h]	250	320		500			650	
Shaft seal									
Standard		Lip seal							
Option 1		Mechanical seal acc. To EN 12756 (DIN 24960)							
Size Ø (3)	[mm]	50			65			75	
Option 2		Gland packing							
Size	[mm]	Q8 x 1000							

(1) If motor frame ≥250M = Bearing 6314 + 2 x 7314 / If motor frame ≤225S-M = Bearing 2 x 7310
(2) Total number of bearing bushes in columns = table value x (number of columns - 1).See "Dimensions" paragraph for number of columns
(3) For cartridge mechanical seal, quit 10 mm to the diameter

	Units	CHANNEL IMPELLER "C" PUMP SIZES													
		50/160C	50/200C	65/200C	80/250C	65/315C	100/250C	100/315C	80/400C	100/400C	150/315C	200/315C	125/500C	150/500C	200/400C
General															
Impeller outlet width	[mm]	34	34	46	48	42	58	54	46	50	88	85	50	60	80
Impeller eye section	[cm2]	33	33	50	79	50	123	123	113	123	177	214	177	227	269
Max. & min. Impeller Ø	[mm]	See individual curve													
Maximum solid size	[mm]	30	30	42	44	38	54	50	42	46	84	81	46	56	76
Shaft Ø															
Pump end	[mm]	20	27			35			47				52		
Under ball bearings	[mm]	35							50				58		
At flexible coupling	[mm]	32							48				55		
Bearings															
Ball bearings (above base plate)		2 x 7307			2 x 7310				(1)				2 x 7314 + 6314		
Friction bearing bush (pump)		2 x 28/05	2 x 40/03		2 x 40/02	2 x 55/01			2 x 65/01						
Friction bearing bush (2) (column)		40/02							2 x 55/01				2 x 65/01		
Alowable motor frame		See “Dimensions per motor size” paragraph													
Drive rating	[P/n]	0,01	0,027			0,06			0,156				0,313		
External lubrication (per bearing) for friction bearing bushes	[l/h]	250			320					500				650	
Shaft seal															
Standard		Lip seal													
Option 1		Mechanical seal acc. To EN 12756 (DIN 24960)													
Size Ø (3)	[mm]	50							65				75		
Option 2		Gland packing													
Size	[mm]	Q8 x 1000													

(1) If motor frame ≥250M = Bearing 2 x 7314 + 6314 / If motor frame ≤225S-M = Bearing 2 x 7310
(2) Total number of bearing bushes in columns = table value x (number of columns - 1).See “dimensions” paragraph for number of columns
(3) For cartridge mechanical seal, quit 10 mm to the diameter

	Units	VORTEX IMPELLER "V"					
		PUMP SIZE					
		50/200V	80/250V	100/250V	100/400V	150/315V	200/315V
General							
Impeller outlet width	[mm]	45,38	71,2	76	76	113	124,5
Impeller eye section	[cm2]	44	79	123	123	177	314
Max. & min. Impeller Ø	[mm]	See individual curve					
Maximum solid size	[mm]	35	65	70	70	100	100
% of solids	%	≤ 6%					
Sand contents	[g/l]	≤ 5 g/l (4)					
Shaft Ø							
Pump end	[mm]	27		35	47		
Under ball bearings	[mm]	35			50		
At flexible coupling	[mm]	32			48		
Bearings							
Ball bearings (above base plate)		2 x 7307	2 x 7310		(1)		
Friction bearing bush (pump)		2 x 40/03		2 x 55/01	2 x 65/01		
Friction bearing bush (2) (column)		40/02			2 x 55/01		
Alowable motor frame		See "Dimensions per motor size" paragraph					
Drive rating	[P/n]	0,027		0,06	0,156		
External lubrication (per bearing) for friction bearing bushes	[l/h]	250	320			500	
Shaft seal							
Standard		Lip seal					
Option 1		Mechanical seal acc. To EN 12756 (DIN 24960)					
Size Ø (3)	[mm]	50			65		
Option 2		Gland packing					
Size	[mm]	Q8 x 1000					

(1) If motor frame ≥250M = Bearing 6314 + 2 x 7314 / If motor frame ≤225S-M = Bearing 2 x 7310
(2) Total number of bearing bushes in columns = table value x (number of columns - 1).See "Dimensions" paragraph for number of columns
(3) For cartridge mechanical seal, quit 10 mm to the diameter
(4) Severe hudroabrasive wear occurs if solids contents of approx. 0.5 g/l or higher are combined with circumferential speeds exceeding 20 m/s or low-flow conditions to the left of the duty point

11. Cross section drawings

Ref.	Denomination
102	Volute casing
135	Wear plate
138	Suction bell
161	Pump cover
211	Pump shaft
212	Intermediate drive shaft
230	Impeller
260	Impeller hub cup
301	Intermediate bearing
320	Bearing
341	Pedestal
344	Bearing housing lantern
360	Bearing cover
382	Bearing support
400	Gasket
411	Circular gasket
412	O'ring
420	Lip seal
422	Felt ring
520	Shaft sleeve
526	Centring sleeve
545	Friction bearing bush
554	Flat washer
636	Grease nipple
711	Discharge pipe
712	Intermediate pipe
800	Motor
840	Coupling
844	Rigid coupling
867	Coupling flexible
890	Base plate
901	Hexagon head screw
902	Bolt
904	Setscrew
914	Allen screw
920	Nut
923	Bearing nut
940	Key

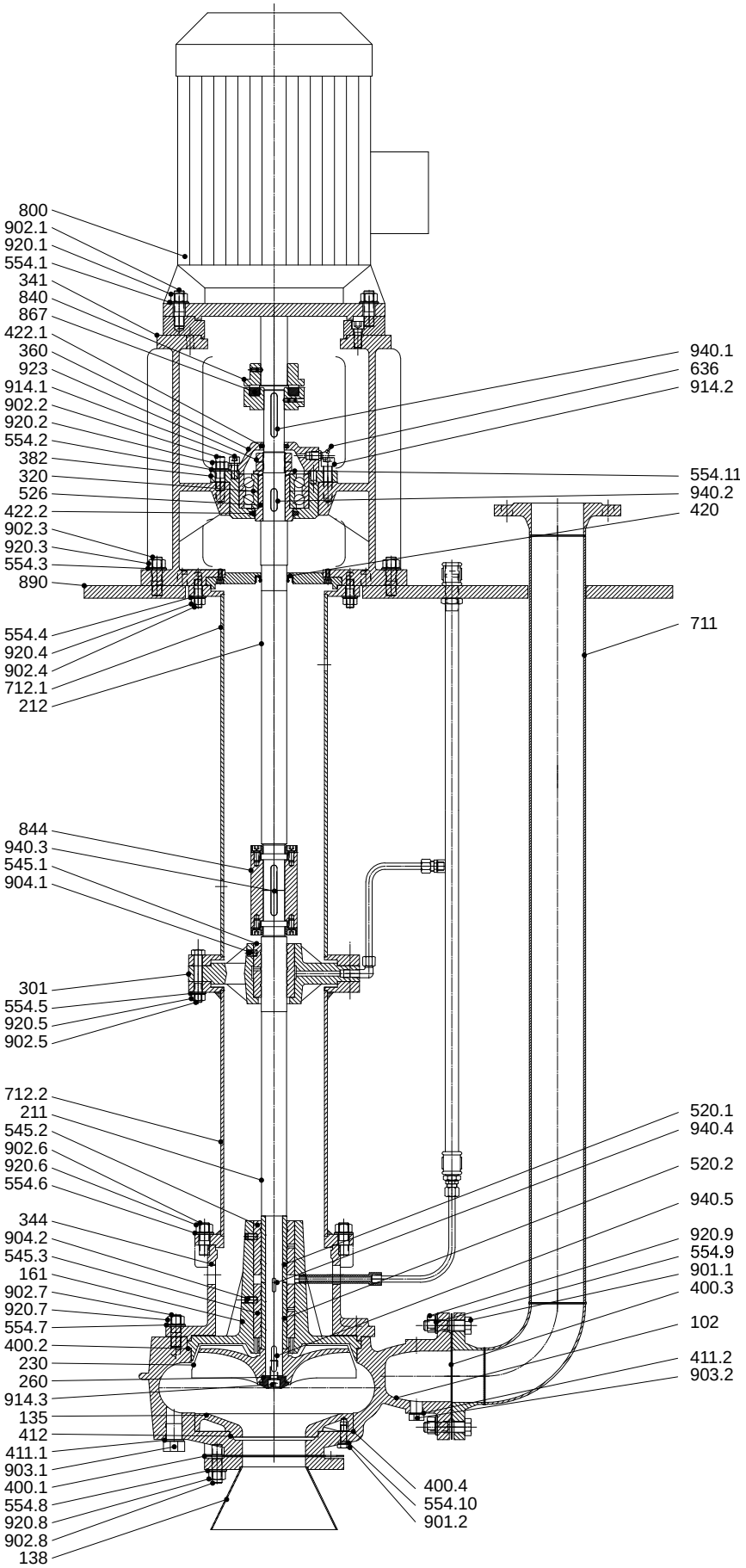

Variant with vortex (V) impeller

Variant with semi-open (A) impeller

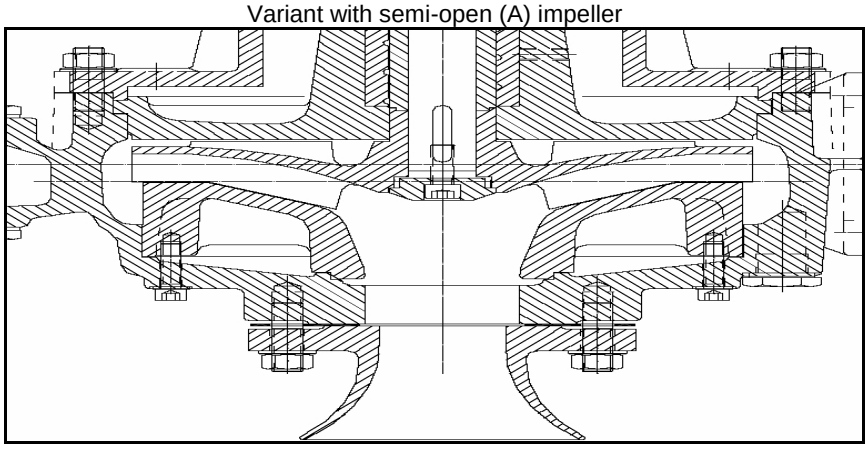

Variant with channel (C) impeller

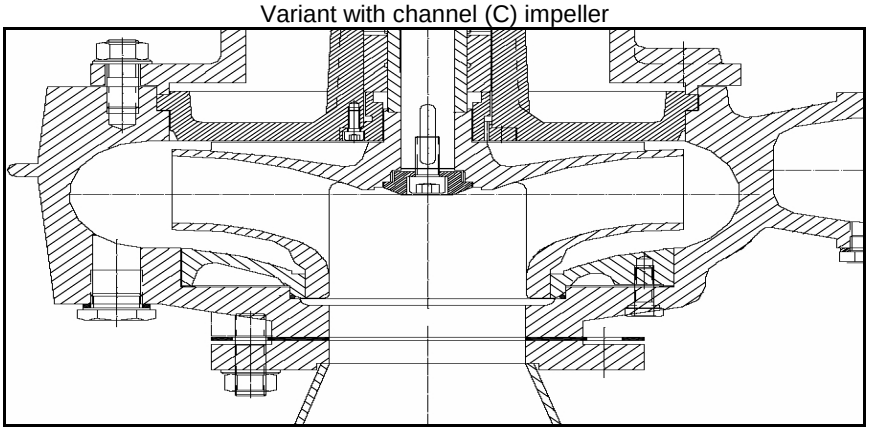

Variant detail with single mechanical seal

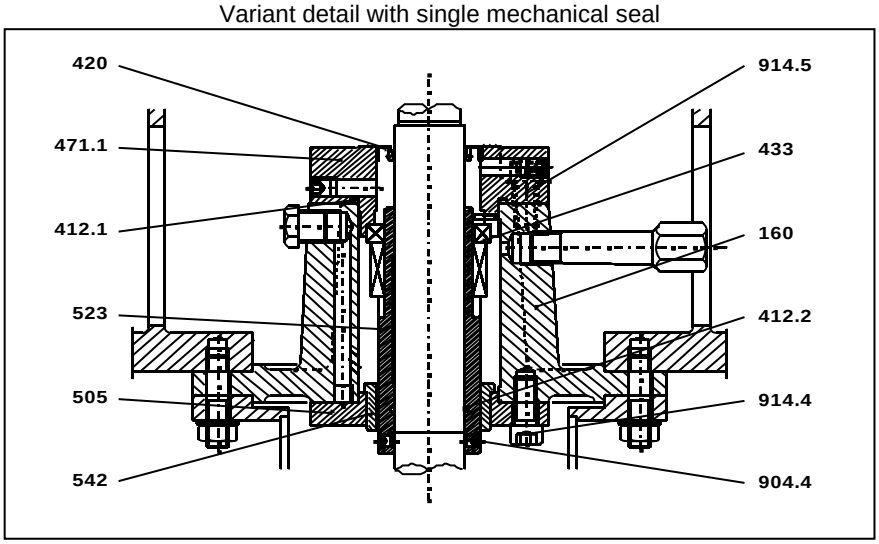

Variant detail with gland packing

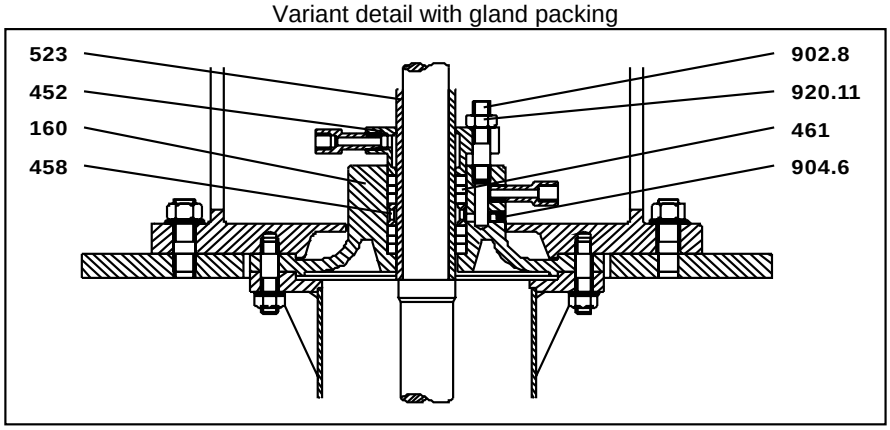

12. Dimensions

Dimensions in mm

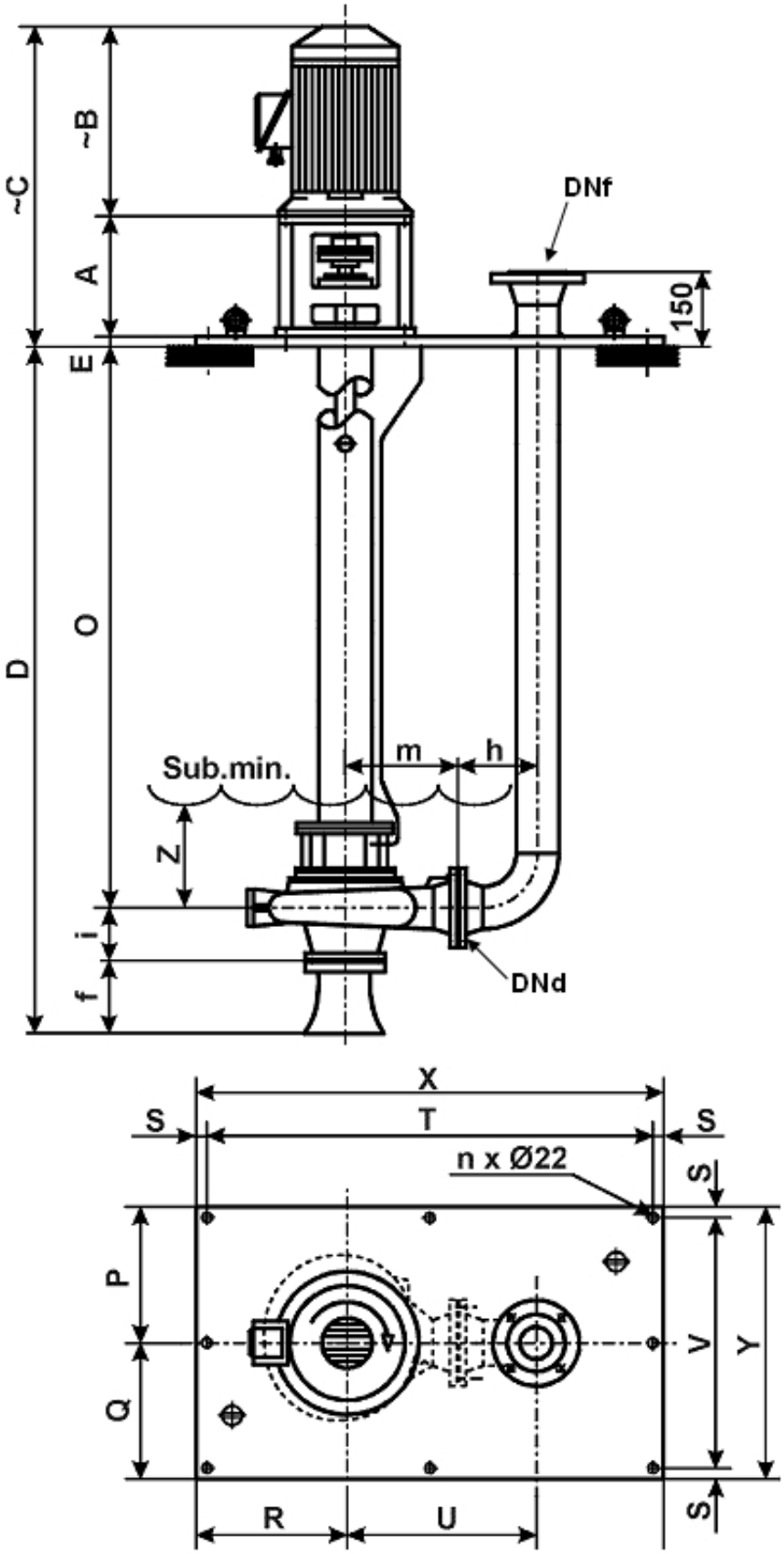

Pump	f	h	i	m	n	P	Q	R	S	T	U	V	X	Y	Z
50/160	100	124	100	180	8	220	220	220	30	660	304	380	720	440	270
50/200	100	124	112	200	8	230	230	220	30	640	324	400	700	460	270
65/200	100	143	125	225	8	260	260	255	30	740	368	460	800	520	270
65/315	100	143	140	280	8	300	300	310	30	870	423	540	930	600	270
80/250	115	167	125	280	8	300	300	300	30	870	447	540	930	600	270
80/400	115	167	140	355	8	345	345	345	30	980	522	630	1040	690	320
100/250	130	207	140	280	8	300	300	290	30	920	487	540	980	600	270
100/315	130	207	140	315	8	350	350	350	30	1020	522	640	1080	700	270
100/400	130	207	140	355	8	365	365	365	30	1080	562	670	1140	730	320
125/500	147	248	160	450	8	460	460	460	30	1460	698	860	1520	920	470
150/315	147	286	180	400	8	375	375	400	30	1280	686	690	1340	750	370
150/500	147	286	160	500	12	460	460	460	30	1460	786	860	1520	920	470
200/315	200	370	200	450	12	420	420	440	30	1480	820	780	1540	840	370
200/400	200	370	180	500	12	470	420	450	30	1560	870	830	1620	890	370

For A, B, C, and E values see “Dimensions per motor size” paragraph

For O and D values see “Available lengths” table

Available discharge flange dimensions

Pump casing flange DNd	Discharge flange DNf [mm/”] (1)					
	Option 1		Option 2		Option 3	
50	50	2"	65	2 1/2"	80	3"
65	65	2 1/2"	80	3"	100	4"
80	80	3"	100	4"	125	5"
100	100	4"	125	5"	150	6"
125	125	5"	150	6"	200	8"
150	150	6"	200	8"	250	10"
200	200	8"	250	10"	300	12"

(1) EN 1092 / DIN PN10

ANSI B16.5 150#

AVAILABLE "O" LENGTHS														
Pump	50/160	50/200	65/200	65/315	80/250	80/400	100/250	100/315	100/400	125/500	150/315	150/500	200/315	200/400
1 SECTION COLUMN	440	440	440	455	455	455	455	455	455	465	485	465	485	474
	640	640	640	655	655	655	655	655	655	665	685	665	685	674
	840	840	840	855	855	855	855	855	855	865	885	865	885	874
	1040	1040	1040	1055	1055	1055	1055	1055	1055	1065	1085	1065	1085	1074
	1290	1290	1290	1305	1305	1310	1305	1305	1310	1315	1340	1315	1340	1324
	1540	1540	1540	1555	1555	1555	1555	1555	1555	1565	1585	1565	1585	1574
	1790	1790	1790	1805	1805	1783	1805	1805	1783	1815	1813	1815	1813	1824
2 SECTION COLUMN	1960	1960	1960	1980	1980	1980	1980	1980	1980	1999	2010	1999	2010	1999
	2060	2060	2060	2080	2080	2093	2080	2080	2093	2090	2110	2090	2110	2099
	2210	2210	2210	2230	2230	2180	2230	2230	2180	2240	2238	2240	2238	2249
	2360	2360	2360	2380	2380	2208	2380	2380	2208	2390	2410	2390	2410	2399
	2560	2560	2560	2580	2580	2380	2580	2580	2380	2590	2610	2590	2610	2599
	2810	2810	2810	2930	2930	2580	2830	2830	2580	2840	2838	2840	2865	2849
	3060	3060	3060	3080	3080	2808	3080	3080	2808	3090	3110	3090	3110	3099
	3310	3310	3310	3330	3330	3080	3330	3330	3080	3340	3360	3340	2360	3349
	3560	3560	3560	3580	3580	3330	3580	3580	3330	3590	3615	3590	3615	3599
3 SECTION COLUMN	3830	3830	3830	3855	3855	3838	3855	3855	3838	3865	3868	3865	3868	3874
	4080	4080	4080	4105	4105	4105	4105	4105	4105	4115	4135	4115	4135	4124
	4580	4580	4580	4605	4605	4605	4605	4605	4605	4615	4635	4615	4635	4624
	4830	4830	4830	4855	4855	4855	4855	4855	4855	4865	4885	4865	4885	4874
	5080	5080	5080	5105	5105	5105	5105	5105	5105	5115	5135	5115	5135	5124
	5330	5330	5330	5330	5330	5355	5355	5355	5355	5365	5385	5365	5385	5374
	(1)			(2)						(3)	(2)	(3)	(2)	(3)

(1) If packing or mechanical seal option add 15 mm

(2) If packing or mechanical seal option and motor frame ≤ 225S/M add 15 mm / motor ≥ 250M add 20 mm

(3) If packing or mechanical seal option add 20 mm

AVAILABLE "D" LENGTHS (total)														
Pump	50/160	50/200	65/200	65/315	80/250	80/400	100/250	100/315	100/400	125/500	150/315	150/500	200/315	200/400
1 SECTION COLUMN	640	652	665	695	695	710	725	725	725	772	812	772	885	854
	840	852	865	895	895	910	925	925	925	972	1012	972	1085	1054
	1040	1052	1065	1095	1095	1110	1125	1125	1125	1172	1212	1172	1285	1254
	1240	1252	1265	1295	1295	1310	1325	1325	1325	1372	1412	1372	1485	1454
	1490	1502	1515	1545	1545	1565	1575	1575	1580	1622	1667	1622	1740	1704
	1740	1752	1765	1795	1795	1810	1825	1825	1825	1872	1912	1872	1985	1954
	1990	2002	2015	2045	2045	2038	2075	2075	2053	2122	2140	2122	2213	2204
2 SECTION COLUMN	2160	2172	2185	2220	2220	2235	2250	2250	2250	2306	2337	2306	2410	2379
	2260	2272	2285	2320	2320	2348	2350	2350	2363	2397	2437	2397	2510	2479
	2410	2422	2435	2470	2470	2435	2500	2500	2450	2547	2565	2547	2638	2629
	2560	2572	2585	2620	2620	2463	2650	2650	2478	2697	2737	2697	2810	2779
	2760	2772	2785	2820	2820	2635	2850	2850	2650	2897	2937	2897	3010	2979
	3010	3022	3035	3070	3070	2835	3100	3100	2850	3147	3165	3147	3265	3229
	3260	3272	3285	3320	3320	3063	3350	3350	3078	3397	3437	3397	3510	3479
	3510	3522	3535	3570	3570	3335	3600	3600	3350	3647	3687	3647	3760	3729
	3760	3772	3785	3820	3820	3585	3850	3850	3600	3897	3942	3897	4015	3979
3 SECTION COLUMN	4030	4042	4055	4095	4095	4093	4125	4125	4108	4172	4195	4172	4268	4254
	4280	4292	4305	4345	4345	4360	4375	4375	4375	4422	4462	4422	4535	4504
	4780	4792	4805	4845	4845	4860	4875	4875	4875	4922	4962	4922	5035	5004
	5030	5042	5055	5095	5095	5110	5125	5125	5125	5172	5212	5172	5285	5254
	5280	5292	5305	5345	5345	5360	5375	5375	5375	5422	5462	5422	5535	5504
	5530	5542	5555	5595	5595	5610	5625	5625	5625	5672	5712	5672	5785	5754
	(1)			(2)						(3)	(2)	(3)	(2)	(3)

(1) If packing or mechanical seal option add 15 mm

(2) If packing or mechanical seal option and motor frame ≤ 225S/M add 15 mm / motor ≥ 250M add 20 mm

(3) If packing or mechanical seal option add 20 mm

Dimensions per motor size

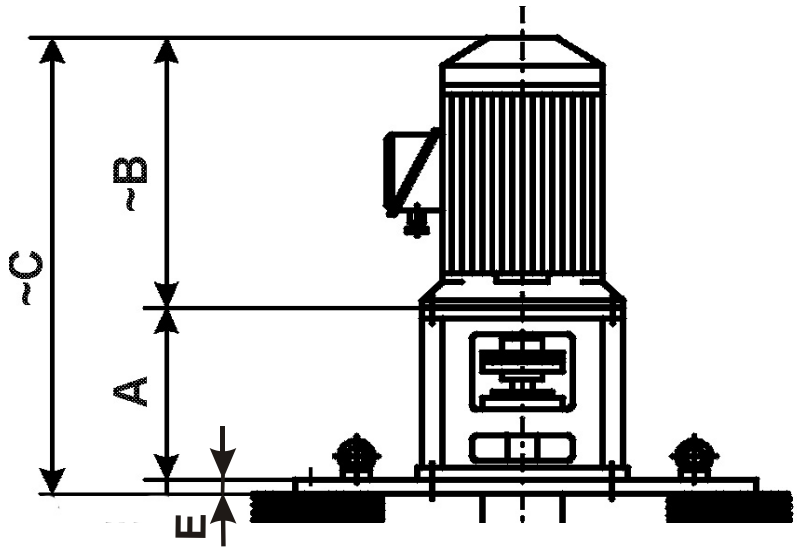

Pump Size	Motor Frame	A		B	E	C	
50/160 50/200 65/200	225 (4 poles)	460	(1)	666	20	1146	(1)
	225 (2 poles)	430				1116	
	200			660		1110	
	180	355	(2)	602		977	(2)
	160			478		853	
	132	325		373		718	
	112	305		333		658	
	100			312		637	
	90	335		281		636	
	80	325		234		579	
65/315 80/250 100/250 100/315	280	600	(3)	820	20	1440	(3)
	250			747		1367	
	225 (4 poles)	460	(2)	666		1146	(2)
	225 (2 poles)	430		666		1116	
	200			660		1110	
	180			602		1052	
	160			478		928	
	132	400		373		793	
	112			333		753	
	100			312		732	

Pump Size	Motor Frame	A		B	E	C	
80/400	280	600	(3)	820	20	1440	(3)
	250			747		1367	
	225 (4 poles)	460	(2)	666		1146	(2)
	225 (2 poles)	430				1116	
	200			660		1110	
	180			602		1052	
	160	430		478		928	
	132	400		373		793	
150/315 200/315 100/400	280	600	(3)	820	25	1445	(3)
	250			747		772	
	225 (4 poles)	460	(2)	666		1151	(2)
	225 (2 poles)	430				455	
	200			660		685	
	180			602		627	
	160			478		503	
	132	400		373		798	
125/500 150/500 200/400	315	630	(3)	932	30	1592	(3)
	280	600		820		1450	
	250			747		1377	
	225 (4 poles)			666		1296	
	225 (2 poles)					1296	
	200			660		1290	

(1) If packing or mechanical seal option add 55 mm

(2) If packing or mechanical seal option add 60 mm

(3) If packing or mechanical seal option add 80 mm

13. Coating

Single coat of 40 microns thickness water basis enamel with finish colour blue RAL 5010. Painted surface maximum temperature 70 ºC. Other coatings upon request.

14. Recommended spare parts stock for two years continuous operation

		Number of pumps (including stand-by pumps)						
Ref.	**Denomination**	**1-2**	**3**	**4**	**5**	**6-7**	**8-9**	**10 and more**
---	Joints (set)	2	3	4	5	6	7	90%
433	Mechanical seal	2	3	4	5	6	7	90%
461	Packing	2	3	4	5	6	7	90%
135	Wear plate	1	1	2	2	2	3	30%
320	Bearing (set)	1	1	2	2	2	3	30%
420	Lip seal (set)	1	1	2	2	2	3	30%
422	Felt ring (set)	1	1	2	2	2	3	30%
458	Lantern ring	1	1	2	2	2	3	30%
502	Wear ring (set)	1	1	2	2	2	3	30%
520	Shaft sleeve	1	1	2	2	2	3	30%
523	Shaft wearing sleeve	1	1	2	2	2	3	30%
545	Friction bearing bush (set)	1	1	2	2	3	4	50%
867	Coupling flexible (set)	1	1	2	2	2	3	30%
260+914	Impeller hub cup / Allen screw	1	1	2	2	2	3	30%
940	Key (set)	1	1	2	2	2	3	30%
211-212	Pump shaft (set)	1	1	2	2	2	3	30%
230	Impeller	1	1	2	2	2	3	30%
840	Coupling (set)	1	1	2	2	2	3	30%

Subject to technical modifications without prior notice

1912.5/02-EN

LENNTECH
WATER TREATMENT SOLUTIONS
info@lenntech.com Tel. +31-152-610-900
www.lenntech.com Fax. +31-152-616-289