LENNTECH
WATER TREATMENT SOLUTIONS

KSB

Hygienic Pump

Vitachrom

Type Series Booklet

KSB

Legal information/Copyright

Type Series Booklet Vitachrom

All rights reserved. The contents provided herein must neither be distributed, copied, reproduced, edited or processed for any other purpose, nor otherwise transmitted, published or made available to a third party without the manufacturer's express written consent.

Subject to technical modification without prior notice.

© KSB SE & Co. KGaA, Frankenthal 2023-06-02

Contents

Hygienic Pump **4**
Close-coupled Pump 4
Vitachrom 4
Main applications 4
Fluids handled 4
Operating data 4
Design details 4
Designation 5
Materials 7
Coating and preservation 7
Product benefits 7
Certifications 8
Acceptance tests and warranty 8
Overview of fluids handled 8
Mounting arrangements 11
Technical data 11
Selection charts 12
Characteristic curves 16
Dimensions and connections 17
Installation information 65
Pump accessories 65
Exploded view / List of components 66

Hygienic Pump

Close-coupled Pump

Vitachrom

The product illustrated as an example may include options incurring a surcharge.

Main applications

- Food industry / beverage industry
- Pharmaceutical industry
- Chemical industry

Fluids handled

- Fluids not chemically or mechanically aggressive to the materials

Operating data

Table 1: Operating properties

Characteristic		Value	
		50 Hz	60 Hz
Flow rate	Q [m³/h]	≤ 340	≤ 320
Head	H [m]	≤ 100	≤ 112
Fluid temperature	T [°C]	≥ -30	
		≤ +110	
Sterilisation temperature (SIP)	T [°C]	≤ +140	
Operating pressure	p [bar]	≤ 12	
Connection sizes	DN	50 - 125	

Design details

Design

- Centrifugal pump
- Close-coupled design
- Single-stage
- Wetted parts made of stainless steel 1.4404/1.4409 (AISI 316L/CF3M)
- CIP/SIP-compatible
- Standard design with materials to Regulation (EC) No. 1935/2004
- Fixed speed version (without PumpDrive 2 / PumpDrive 2 Eco / PumpDrive R) / variable speed version (with PumpDrive 2 / PumpDrive 2 Eco / PumpDrive R)

Pump casing

- Circular casing

Drive (fixed speed version)

Standard design:

- KSB/Siemens surface-cooled IEC frame three-phase squirrel-cage motor
- Efficiency class IE2 (size 71/80) / IE3 (from size 90) to IEC 60034-30
- Rated voltage (50 Hz) 230 V / 400 V ≤ 2.20 kW
- Rated voltage (50 Hz) 400 V / 690 V ≥ 3.00 kW
- Rated voltage (60 Hz) - / 460 V ≤ 2.20 kW
- Rated voltage (60 Hz) 460 V / - ≥ 3.00 kW
- Type of construction IM V1 ≤ 4.00 kW
- Type of construction IM V15 ≥ 5.50 kW
- Enclosure IP55
- Duty type: continuous duty S1
- Thermal class F with temperature sensor, 1 PTC thermistor (size 80/90) / 3 PTC thermistors (from size 100)

Explosion-proof design:

- KSB surface-cooled IEC three-phase current squirrel-cage motor
- Efficiency class IE2 / IE3 to IEC 60034-30
- Rated voltage (50 Hz) 230 V / 400 V ≤ 2.50 kW
- Rated voltage (50 Hz) 400 V / 690 V ≥ 3.30 kW
- Rated voltage (60 Hz) - / 460 V ≤ 2.50 kW
- Rated voltage (60 Hz) 460 V / - ≥ 3.30 kW
- Type of construction IM V1 ≤ 3.30 kW
- Type of construction IM V15 ≥ 4.60 kW
- Enclosure IP55
- Duty type: continuous duty S1
- Type of protection EEx eb II
- Temperature class T3

Drive (variable speed version)

KSB SuPremE motor:

- Surface-cooled KSB SuPremE motor, IEC-compatible, magnetless synchronous reluctance motor[1)] (PumpDrive required)
- Efficiency class IE4 / IE5 to IEC TS 60034-30-2:2016
- Mounting points to EN 50347:2001
- Envelope dimensions to DIN VDE 42673-4:2011-07
- Type of construction IM V1 ≤ 4.00 kW
- Type of construction IM V15 ≥ 5.50 kW
- Enclosure IP55

1966.5/12-EN

1 Motor sizes 0.55 kW / 0.75 kW with 1500 rpm are designed with permanent magnets.

- Duty type: continuous duty S1
- Thermal class F with temperature sensor, 3 PTC thermistors
- Shaft centreline height 71 to 225 mm
- Rated power 0.55 kW to 45 kW
- Rated speed 1500 rpm or 3000 rpm
- Frequency 50 Hz / 60 Hz (PumpDrive input)
- Voltage 380 V to 480 V (PumpDrive input)

KSB SuPremE C1/D1:

- With terminal box for connecting to PumpDrive 2 or PumpDrive R for mounting on walls and in control cabinets

KSB SuPremE C2/D2:

- Equipped for being fitted with a motor-mounted PumpDrive 2

PumpDrive 2 / PumpDrive 2 Eco:

- Self-cooling frequency inverter of modular design for the continuously variable speed control of asynchronous motors and synchronous reluctance motors by means of analog standard signals, a field bus or the control panel
- Identical design of frequency inverter for motor mounting, wall mounting and cabinet mounting
- Mains voltage 3~ 380 V AC -10 % to 480 V AC +10 %
- Mains frequency 50 Hz to 60 Hz ± 2 %

PumpDrive R:

- Self-cooling frequency inverter of modular design for the continuously variable speed control of asynchronous motors and synchronous reluctance motors, such as KSB SupremE motors or permanent magnet synchronous motors, by means of analog standard signals, a field bus or the control panel
- Identical design of frequency inverter for the mounting types wall mounting and cabinet mounting
- Mains voltage 3~ 380 V AC -10 % to 480 V AC +10 %
- Extended mains voltage range (on request)
- Mains frequency 50 Hz to 60 Hz ± 2 %
- Extended power range with a nominal power of 110 kW (standard) or 1400 kW (on request)

KSB Guard

- System for monitoring the pump's condition by means of temperature and vibration sensors
- Measured values and operating data may be retrieved via the KSB Guard app and the web portal at any time.

Shaft seal

- Single mechanical seal surrounded by fluid handled EN 12756
- Double mechanical seal in tandem arrangement with quench to EN 12756
- Hygienic design or sterile design

Impeller type

- Semi-open multi-vane impeller

Hygienic design:

- Inboard seal with spring surrounded by fluid handled, unidirectional

Sterile design:

- Inboard seal with covered spring, polished surface, bi-directional

Bearings

- No separate pump bearings

Connections

- Axial suction nozzle, tangential discharge nozzle
- Adjustable through 360°

Standard:

- Threaded connection to DIN 11851 (hygienic pipe union)
- Flange to EN 1092-1

Alternative:

- Flange to DIN 11864-2-NF-A
- Flange to EN 1092-1-F
- Flange to APV-FN
- Threaded connection to DIN 11864-1-GS-A
- Threaded connection to IDF (ISO 2853)
- Threaded connection to SMS standard
- Clamped connection to DIN 32676-A
- Clamped connection to ISO 2852
- Other connection types on request

Designation

Table 2: Designation example

Position																																									
1	2	3	4	5	6	7	8	9	10	11	12	13	14	15	16	17	18	19	20	21	22	23	24	25	26	27	28	29	30	31	32	33	34	35	36	37	38	39	40	41	42	43
V	C			0	5	0	-	0	5	0	-	1	2	5		C	C		I	0	1	M	A	1	3	0	0	2			A	P	D	2			K	S	B	I	E	3
See name plate and data sheet																									See data sheet																	

Table 3: Designation key

Position	Code	Description
1-4	Pump type	
	VC	Vitachrom
5-16	Size, e.g.	
	050	Nominal suction nozzle diameter [mm]
	050	Nominal discharge nozzle diameter [mm]
	125	Nominal impeller diameter [mm]
17	Pump casing material	

Position	Code	Description	
17	C	Stainless steel	1.4409
18	Impeller material		
	C	Stainless steel	1.4404
19	Design		
	[2]	Standard	
	X	Non-standard (BT3D, BT3)	
20-22	Seal code, single mechanical seal		
	I01	BQ1E1-04GG	Carbon/SiC/EPDM
	I02	BQ1V26GG	Carbon/SiC/Viton
	I03	Q12Q1E1-04GG	SiC/SiC/EPDM
	I04	Q12Q1V26GG	SiC/SiC/Viton
	I06	BQ1E1-04GG	Carbon/SiC/EPDM
	I07	BQ1V26GG	Carbon/SiC/Viton
	I08	Q12Q1E1-04GG	SiC/SiC/EPDM
	I09	Q12Q1V26GG	SiC/SiC/Viton
	I10	Q22Q2E1-04GG	Si-SiC/Si-SiC/EPDM
	I21	Q12Q1M1GG	SiC/SiC/PTFE
	Seal code, double mechanical seal in tandem arrangement		
	T11	BQ1E1-04GG	Carbon/SiC/EPDM
		BQ1EGG	Carbon/SiC/EPDM
	T12	BQ1V26GG	Carbon/SiC/Viton
		BQ1EGG	Carbon/SiC/EPDM
	T13	Q12Q1E1-04GG	SiC/SiC/EPDM
		BQ1EGG	Carbon/SiC/EPDM
	T14	Q12Q1V26GG	SiC/SiC/Viton
		BQ1EGG	Carbon/SiC/EPDM
	T16	BQ1E1-04GG	Carbon/SiC/EPDM
		BQ1EGG	Carbon/SiC/EPDM
	T17	BQ1V26GG	Carbon/SiC/Viton
		BQ1EGG	Carbon/SiC/EPDM
	T18	Q12Q1E1-04GG	SiC/SiC/EPDM
		BQ1EGG	Carbon/SiC/EPDM
	T19	Q12Q1V26GG	SiC/SiC/Viton
		BQ1EGG	Carbon/SiC/EPDM
	T20	Q22Q2E1-04GG	Si-SiC/Si-SiC/EPDM
		BQ1EGG	Carbon/SiC/EPDM
	T31	Q12Q1M1GG	SiC/SiC/PTFE
		BQ1EGG	Carbon/SiC/EPDM
23	Scope of supply		
	A	Angle foot	
	B	Soleplate G1 / G2	
	K	Ball feet	
	M	Motor feet	
	T	Round base feet	
24	Pipe connection		
	A	Flange	APV FN
	B	Thread	DIN 11864-1A
	C	Flange	DIN 11864-2A
	D	Clamped connection	DIN 11864-3A
	G	Flange	Varivent
	I	Thread	ISO 2853 (IDF)
	J	Small flange	Kieselmann
	L	Flange	EN 1092-1
	M	Thread	DIN 11851 (hygienic pipe union)
	N	Flange	Neumo
	R	Flange	DIN 2633 (EN 1092-1) with recess
	S	Thread	SMS

2 Blank

Position	Code	Description	
24	T	Clamped connection	EN 32676-A
25	O-ring material		
	1	EPDM	
	2	Viton	
	3	PTFE	
26-28	Motor rating P_N [kW]		
	075	7,50	
	...	...	
	100	10,00	
29	Number of motor poles		
30-31	Explosion protection		
	ex	With explosion-proof motor	
	--	Without explosion-proof motor	
32	Product generation		
	A	Vitachrom	
33-36	PumpDrive		
	[2]	Without PumpDrive	
	PD2	PumpDrive 2	
	PD2E	PumpDrive 2 Eco	
37	PumpMeter		
	[2]	Without PumpMeter	
	M	PumpMeter	
38-40	Motor manufacturer		
	KSB	KSB	
	SIE	Siemens	
	LOH	Loher	
	HAL	Halter	
41-43	Efficiency class		

Materials

Table 4: Overview of available materials

Part No.	Description	Material
103	Circular casing[3]	1.4404/1.4409 (AISI 316L/CF3M)
163	Discharge cover[3]	1.4409 (AISI CF3M)
230	Impeller[3]	1.4404 (AISI 316L)
922	Impeller nut[3]	1.4404 (AISI 316L)
210	Pump shaft	1.4571 (AISI 316 Ti)
341	Drive lantern	GJL with cataphoretic coating

All materials that will be in contact with the fluid handled conform with Regulation (EC) No 1935/2004 and Commission Regulation (EC) No. 2023/2006.

Coating and preservation

- Coating and preservation to KSB standard

Product benefits

- Easy to clean with very little dead volume and excellent flushing capability
- Service-friendly design, easy and fast to dismantle
- Can be driven by all common standardised motors via stub shaft
- High surface quality thanks to special polishing techniques
- Corrosion-resistant design with high-quality stainless steel
- Operating costs reduced by trimming the nominal impeller diameter to match the specified duty point
- Highly suitable for CIP/SIP routines

3 Wetted components

Certifications

Table 5: Overview

Label	Effective in:	Comment
	All countries	Certified quality management to ISO 9001
	All countries	European Hygienic Engineering & Design Group
	All countries	Elastomers certified to FDA, 3A, USP Class VI
	France	Approved in accordance with the French drinking water regulation

Acceptance tests and warranty

- Materials testing
  - Material test report 2.2 on request
  - Material test report 3.1 on request
- Final inspection
  - Inspection certificate 3.1 to EN 10204 on request
- Hydraulic test against surcharge
  - To ISO 9906/2B or ISO 9906/3B
  - NPSH test
- Other tests
  Other tests (e.g. vibrations, strength, noise characteristics) on request.
- Warranties
  Warranties are given within the scope of the valid terms and conditions of sale and delivery.

Overview of fluids handled

Table 6: Fluid selection table

			Mechanical seal design											
			Single mechanical seal						Double mechanical seal in tandem arrangement					
									Secondary seal BQ1EGG					
			BQ1E1-04GG	Q12Q1E1-04GG	BQ1V26GG	Q12Q1V26GG	Q22Q2E1-04GG	Q12Q1M1GG	BQ1E1-04GG	Q12Q1E1-04GG	BQ1V26GG	Q12Q1V26GG	Q22Q2E1-04GG	Q12Q1M1GG
			Design code											
Mechanical seal with spring surrounded by fluid handled			I01	I03	I02	I04	-	I21	T11	T13	T12	T14	-	T31
Mechanical seal with covered spring			I06	I08	I07	I09	I10	-	T16	T18	T17	T19	T20	-
Fluid handled	**Concentration [%]**	**$t_{max.}$ [°C]**												
Alcohol (ethanol)	-	60	✗	-	-	-	-	-	-	-	-	-	-	-
Alcohol (methanol)	-	60	✗	-	-	-	-	-	-	-	-	-	-	-
Alcohol (propanol)	-	60	✗	-	-	-	-	-	-	-	-	-	-	-
Aluminium sulphate	Up to 5	30	-	✗	-	-	-	-	-	-	-	-	-	-
	Up to 10	30	-	-	-	-	-	-	-	✗	-	-	-	-
Formic acid	10	20	✗	-	-	-	-	-	-	-	-	-	-	-
Malic acid	Unsaturated solution	60	-	✗	-	-	-	-	-	-	-	-	-	-
Apple purée	-	20	✗	-	-	-	-	-	-	-	-	-	-	-
Apple juice	-	60	✗	-	-	-	-	-	-	-	-	-	-	-
Cider	-	60	✗	-	-	-	-	-	-	-	-	-	-	-
Benzoic acid	10	100	-	-	-	✗	-	-	-	-	-	-	-	-
Beer	-	100	✗	-	-	-	-	-	-	-	-	-	-	-
Beer hops	-	100	-	-	-	-	-	-	-	✗	-	-	-	-
Beer mash	-	100	-	✗	-	-	-	-	-	-	-	-	-	-
Beer trub	-	100	-	✗	-	-	-	-	-	-	-	-	-	-
Beer wort	-	100	-	-	-	-	-	-	-	✗	-	-	-	-
Spirits	10	60	✗	-	-	-	-	-	-	-	-	-	-	-
Buttermilk	-	60	✗	-	-	-	-	-	-	-	-	-	-	-
Calcium nitrate	10	30	-	✗	-	-	-	-	-	-	-	-	-	-
Potassium acetate	Unsaturated solution	100	✗	-	-	-	-	-	-	-	-	-	-	-
Fluids for CIP	-	90	-	-	-	-	-	✗	-	-	-	-	-	-
Coke	-	20	✗	-	-	-	-	-	-	-	-	-	-	-
Coke concentrate	-	20	-	✗	-	-	-	-	-	-	-	-	-	-
Deionised water (fully desalinated water)	-	-	✗	-	-	-	-	-	-	-	-	-	-	-
Egg, liquid	-	100	-	-	-	✗	-	-	-	-	-	-	-	-
Egg, liquid mixed with sugar	-	100	-	-	-	-	-	-	-	-	-	✗	-	
Liqueur with egg yolks	-	50	✗	-	-	-	-	-	-	-	-	-	-	-
Vinegar (wine vinegar)	-	60	✗	-	-	-	-	-	-	-	-	-	-	-
Vinegar concentrate	25	25	✗	-	-	-	-	-	-	-	-	-	-	-
Acetic acid	10	60	✗	-	-	-	-	-	-	-	-	-	-	-
	50	20	-	-	-	-	-	-	✗	-	-	-	-	-
Fruit juices and fruit acids	-	60	✗	-	-	-	-	-	-	-	-	-	-	-

1966.5/12-EN

			Mechanical seal design											
			Single mechanical seal						Double mechanical seal in tandem arrangement					
									Secondary seal BQ1EGG					
			BQ1E1-04GG	Q12Q1E1-04GG	BQ1V26GG	Q12Q1V26GG	Q22Q2E1-04GG	Q12Q1M1GG	BQ1E1-04GG	Q12Q1E1-04GG	BQ1V26GG	Q12Q1V26GG	Q22Q2E1-04GG	Q12Q1M1GG
			Design code											
Mechanical seal with spring surrounded by fluid handled			I01	I03	I02	I04	-	I21	T11	T13	T12	T14	-	T31
Mechanical seal with covered spring			I06	I08	I07	I09	I10	-	T16	T18	T17	T19	T20	-
Fluid handled	**Concentration [%]**	**$t_{max.}$ [°C]**												
Fruit liqueur	-	60	-	-	-	-	-	-	✗	-	-	-	-	-
Gallic acid	Unsaturated solution	100	-	-	✗	-	-	-	-	-	-	-	-	-
Vegetable juice	-	100	✗	-	-	-	-	-	-	-	-	-	-	-
Tannic acid	Unsaturated solution	100	✗	-	-	-	-	-	-	-	-	-	-	-
Glucose	Unsaturated aqueous solution	50	-	✗	-	-	-	-	-	-	-	-	-	-
Glycerine	45	100	✗	-	-	-	-	-	-	-	-	-	-	-
Glycol (ethylene glycol)	100	60	-	-	-	-	-	-	✗	-	-	-	-	-
	50	60	✗	-	-	-	-	-	-	-	-	-	-	-
Yeast	-	60	-	✗	-	-	-	-	-	-	-	-	-	-
Sal volatile (ammonium carbonate) (ammonium bicarbonate)	Unsaturated solution	20	✗	-	-	-	-	-	-	-	-	-	-	-
Coffee (extract)	-	60	-	-	-	✗	-	-	-	-	-	-	-	-
Cocoa milk	-	60	✗	-	-	-	-	-	-	-	-	-	-	-
Evaporated milk	-	60	✗	-	-	-	-	-	-	-	-	-	-	-
Evaporated milk, with sugar	-	60	-	✗	-	-	-	-	-	-	-	-	-	-
Herbal liqueur	-	60	✗	✗	-	-	-	-	-	-	-	-	-	-
Linseed oil	-	60	-	-	✗	-	-	-	-	-	-	-	-	-
Linseed oil (3 % sulphuric acid)	-	20	-	-	✗	-	-	-	-	-	-	-	-	-
Lemonade	-	90	-	✗	-	-	-	-	-	-	-	-	-	-
Lysol	-	60	-	-	✗	-	-	-	-	-	-	-	-	-
Skim milk	-	40	✗	-	-	-	-	-	-	-	-	-	-	-
Skim milk, sour	-	40	✗	-	-	-	-	-	-	-	-	-	-	-
Malt	-	100	-	✗	-	-	-	-	-	-	-	-	-	-
Methyl alcohol	-	60	-	-	-	-	-	-	✗	-	-	-	-	-
Milk	-	40	✗	-	-	-	-	-	-	-	-	-	-	-
Milk concentrate	15	50	-	-	-	-	-	-	-	-	-	✗	-	-
Lactic acid	10	20	✗	-	-	-	-	-	-	-	-	-	-	-
	Unsaturated solution	80	-	-	✗	-	-	-	-	-	-	-	-	-
Must	-	60	✗	-	-	-	-	-	-	-	-	-	-	-
Sodium chloride (= common table salt)	2	20	✗	-	-	-	-	-	-	-	-	-	-	-
Sodium hydroxide	Up to 20	80	-	✗	-	-	-	-	-	-	-	-	-	-
	Up to 50	80	-	-	-	-	-	-	-	✗	-	-	-	-
Fruit pulp	-	20	-	✗	-	-	-	-	-	-	-	-	-	-
Oxalic acid	Unsaturated solution	20	-	-	-	-	-	-	✗	-	-	-	-	-
Orange juice	-	-	✗	-	-	-	-	-	-	-	-	-	-	-
Sap	-	50	✗	-	-	-	-	-	-	-	-	-	-	-
Cream (sour/sweet)	-	40	✗	-	-	-	-	-	-	-	-	-	-	-
High-purity water, ultra-pure water	-	100	-	-	-	-	✗	-	-	-	-	-	-	-
Sparkling wine	-	50	-	✗	-	-	-	-	-	-	-	-	-	-
Syrup	-	40	-	✗	-	-	-	-	-	-	-	-	-	-
Sweet permeate (milk)	-	90	-	-	✗	-	-	-	-	-	-	-	-	-
Water (fresh water)[4]	-	110	✗	-	-	-	-	-	-	-	-	-	-	-
Wine (white and red wine)	-	60	✗	-	-	-	-	-	-	-	-	-	-	-
Wine vinegar	See vinegar	-	✗	-	-	-	-	-	-	-	-	-	-	-
Spirits of wine	See alcohol	-	✗	-	-	-	-	-	-	-	-	-	-	-
Tartaric acid	Unsaturated solution	60	✗	-	-	-	-	-	-	-	-	-	-	-
Water for injection	-	100	-	-	-	-	✗	-	-	-	-	-	-	-
Wort, hot wort	-	100	-	-	-	-	-	-	-	✗	-	-	-	-
Citric acid	Unsaturated solution	80	✗	-	-	-	-	-	-	-	-	-	-	-

4 General assessment criteria for results of water analysis: pH ≥ 7; chlorides content (Cl) ≤ 250 mg/kg. Chlorine (Cl2) ≤ 0.6 mg/kg

			Mechanical seal design											
			Single mechanical seal						Double mechanical seal in tandem arrangement					
									Secondary seal BQ1EGG					
			BQ1E1-04GG	Q12Q1E1-04GG	BQ1V26GG	Q12Q1V26GG	Q22Q2E1-04GG	Q12Q1M1GG	BQ1E1-04GG	Q12Q1E1-04GG	BQ1V26GG	Q12Q1V26GG	Q22Q2E1-04GG	Q12Q1M1GG
			Design code											
Mechanical seal with spring surrounded by fluid handled			I01	I03	I02	I04	-	I21	T11	T13	T12	T14	-	T31
Mechanical seal with covered spring			I06	I08	I07	I09	I10	-	T16	T18	T17	T19	T20	-
Fluid handled	**Concentration [%]**	**$t_{max.}$ [°C]**												
Sugar solution	< 65	100	✗	-	-	-	-	-	-	-	-	-	-	-
	> 65	100	-	-	-	-	-	-	-	✗	-	-	-	-
Oils													-	-
Anise oil	-	100	-	-	✗	-	-	-	-	-	-	-	-	-
Cotton seed oil	-	100	-	-	✗	-	-	-	-	-	-	-	-	-
Peanut oil	-	100	-	-	✗	-	-	-	-	-	-	-	-	-
Lavender oil	-	100	-	-	✗	-	-	-	-	-	-	-	-	-
Corn oil	-	100	-	-	✗	-	-	-	-	-	-	-	-	-
Olive oil	-	100	-	-	✗	-	-	-	-	-	-	-	-	-
Rapeseed oil	-	100	-	-	✗	-	-	-	-	-	-	-	-	-
Castor oil	-	100	-	-	✗	-	-	-	-	-	-	-	-	-
Soy-bean oil	-	100	-	-	✗	-	-	-	-	-	-	-	-	-
Sunflower oil	-	100	-	-	✗	-	-	-	-	-	-	-	-	-
Edible oil	-	100	-	-	✗	-	-	-	-	-	-	-	-	-
Walnut oil	-	100	-	-	✗	-	-	-	-	-	-	-	-	-

Mounting arrangements

Table 7: Mounting arrangements for horizontal installation

Mounting arrangement	Description
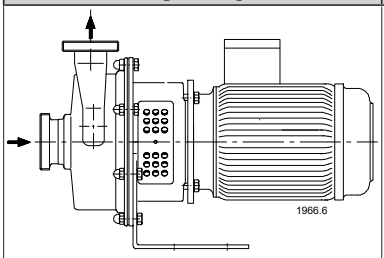	Pump set angle foot mounted ▪ Motor frame size 90 to 112
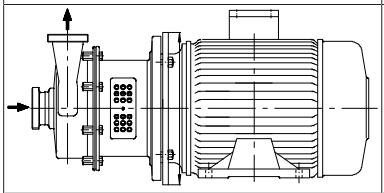	Pump set motor foot mounted ▪ Motor frame size 90 to 280
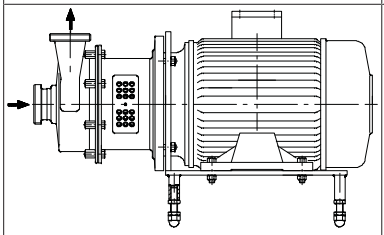	Pump set ball feet mounted ▪ Motor frame size 90 to 280 ▪ Alternatively mounted on rubber-padded round base feet
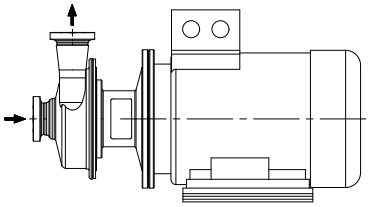	Pump set soleplate mounted ▪ Motor frame size 90 to 280

Technical data

Table 8: Technical data

Size	Shaft unit	Impeller			Speed limits	
		Impeller outlet width	Free passage	Nominal impeller diameter	Maximum	Minimum
		[mm]			[rpm]	
050-050-125	25.1	16	11	138 - 100	3600	500
050-050-160	25.1	14,8	11	166 - 130	3600	500
050-050-200	25.1	13,5	11	196 - 160	3600	500
050-050-250	25.2	4	4	265 - 180	3600	500
065-065-125	25.1	21,5	11	136 - 100	3600	500
065-065-160	25.1	20,3	11	166 - 130	3600	500
065-065-200	25.1	19	11	196 - 160	3600	500
065-065-250	25.2	10	10	265 - 180	3600	500
080-080-125	25.1	31,3	11	145 - 110	3600	500
080-080-160	25.1	30	11	170 - 130	3600	500
080-080-250	25.2	22	16	265 - 180	3600	500
100-100-200	25.2	20	16	220 - 150	3600	500
125-125-200	35	40	25	240 - 150	3600[5)]	500

5 For impeller diameters of 220 mm and larger, the maximum speed equals 3000 rpm.

Selection charts

Vitachrom, n = 1450 rpm

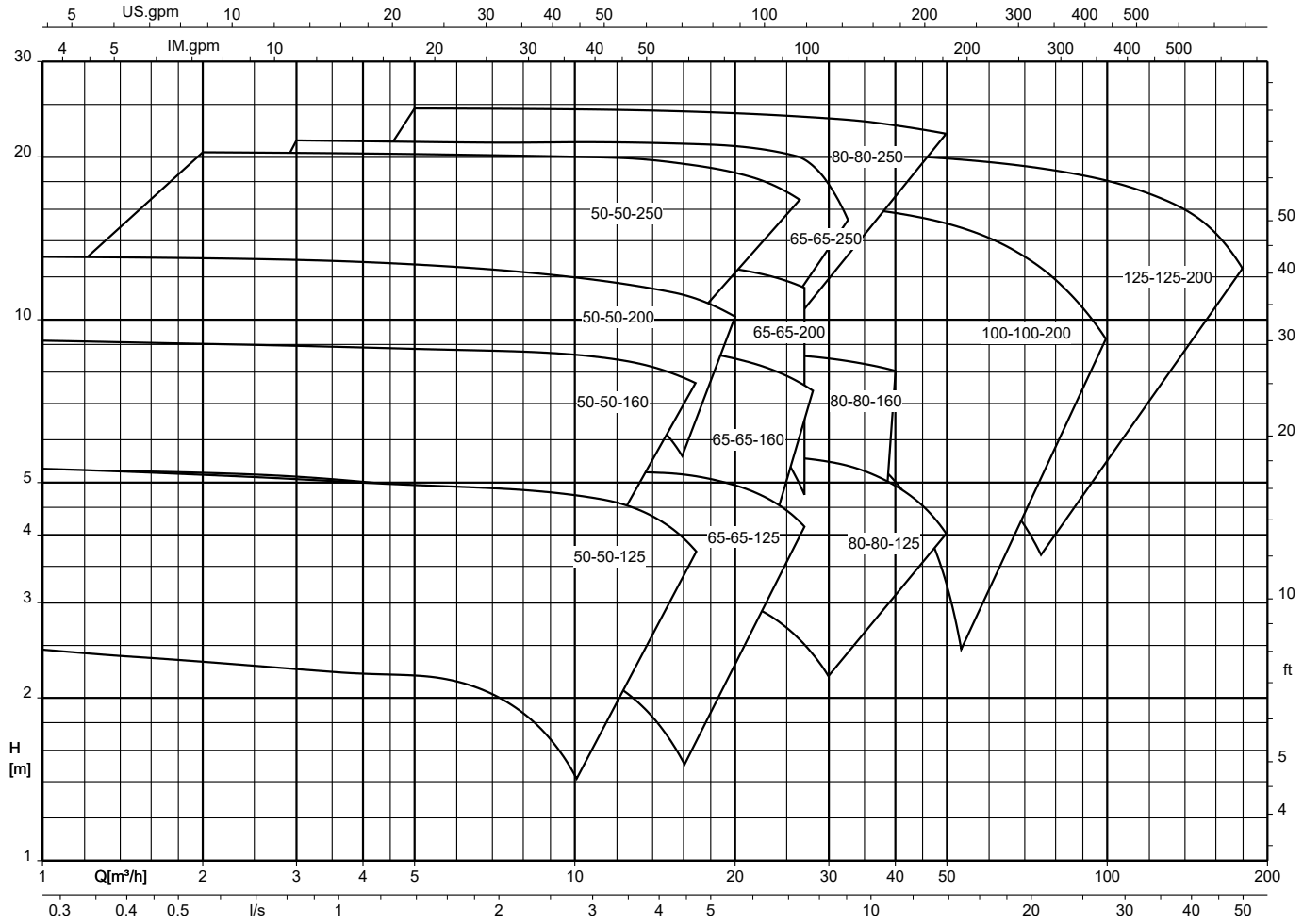

Vitachrom, n = 1750 rpm

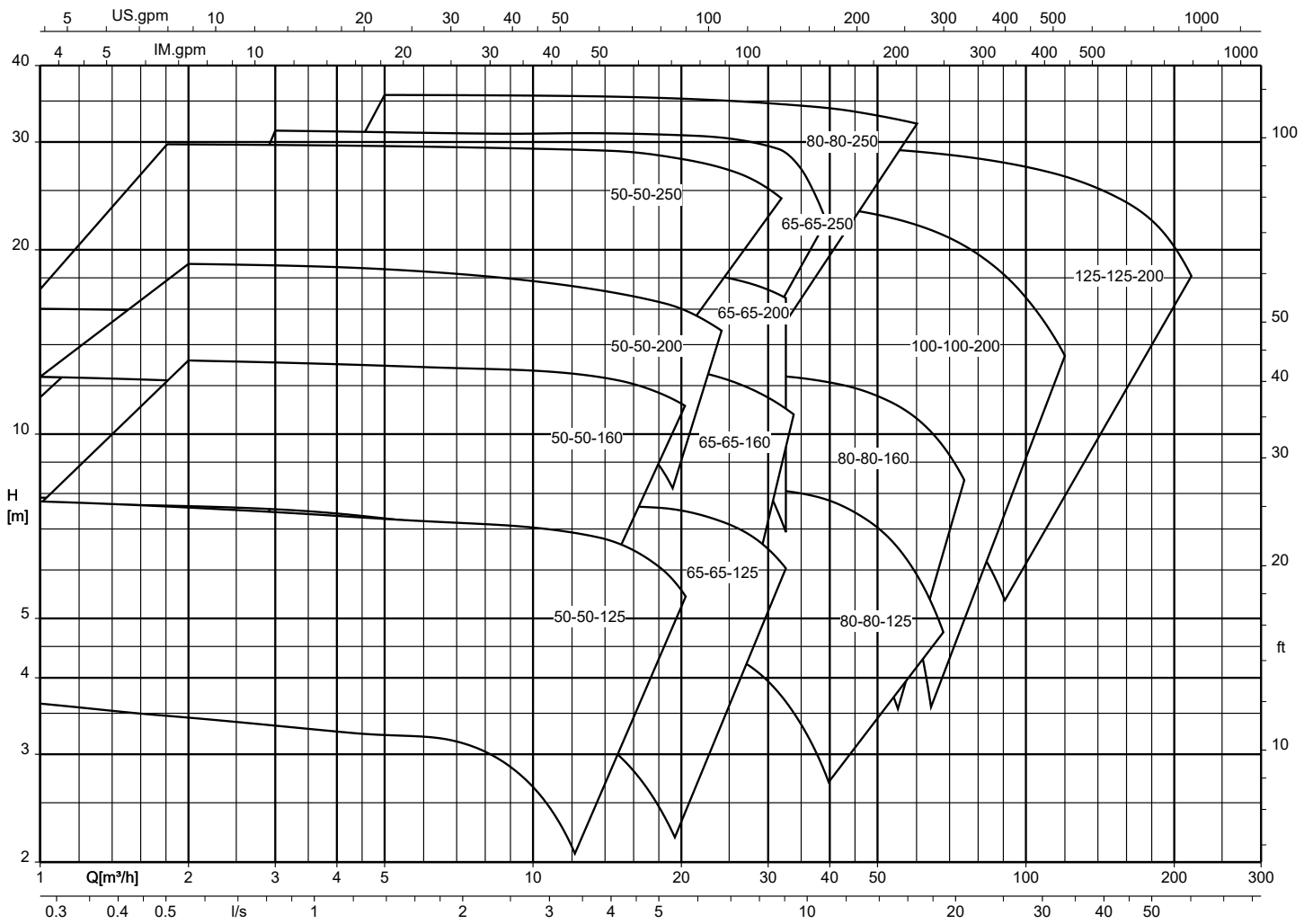

Vitachrom, n = 2900 rpm

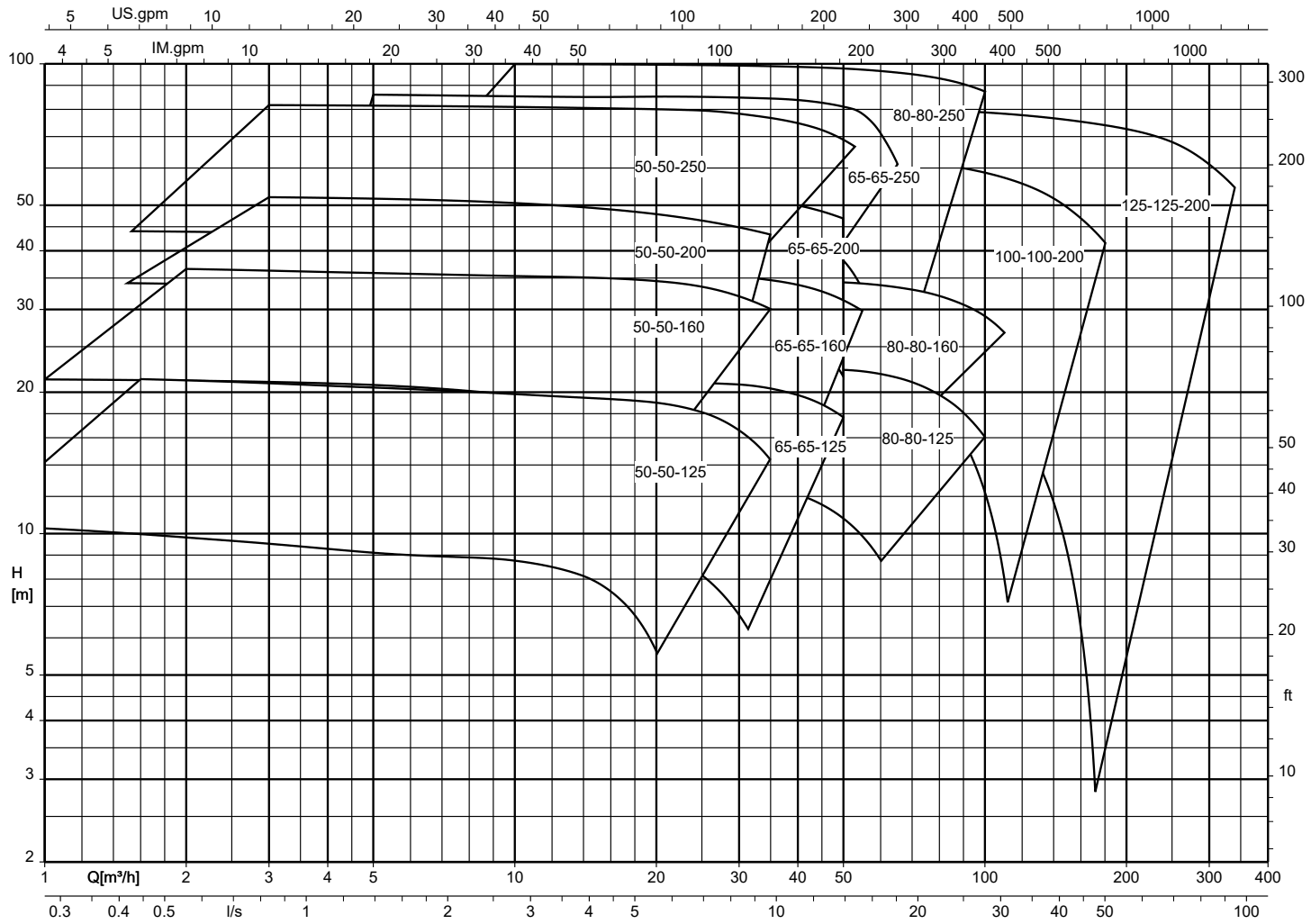

Vitachrom, n = 3500 rpm

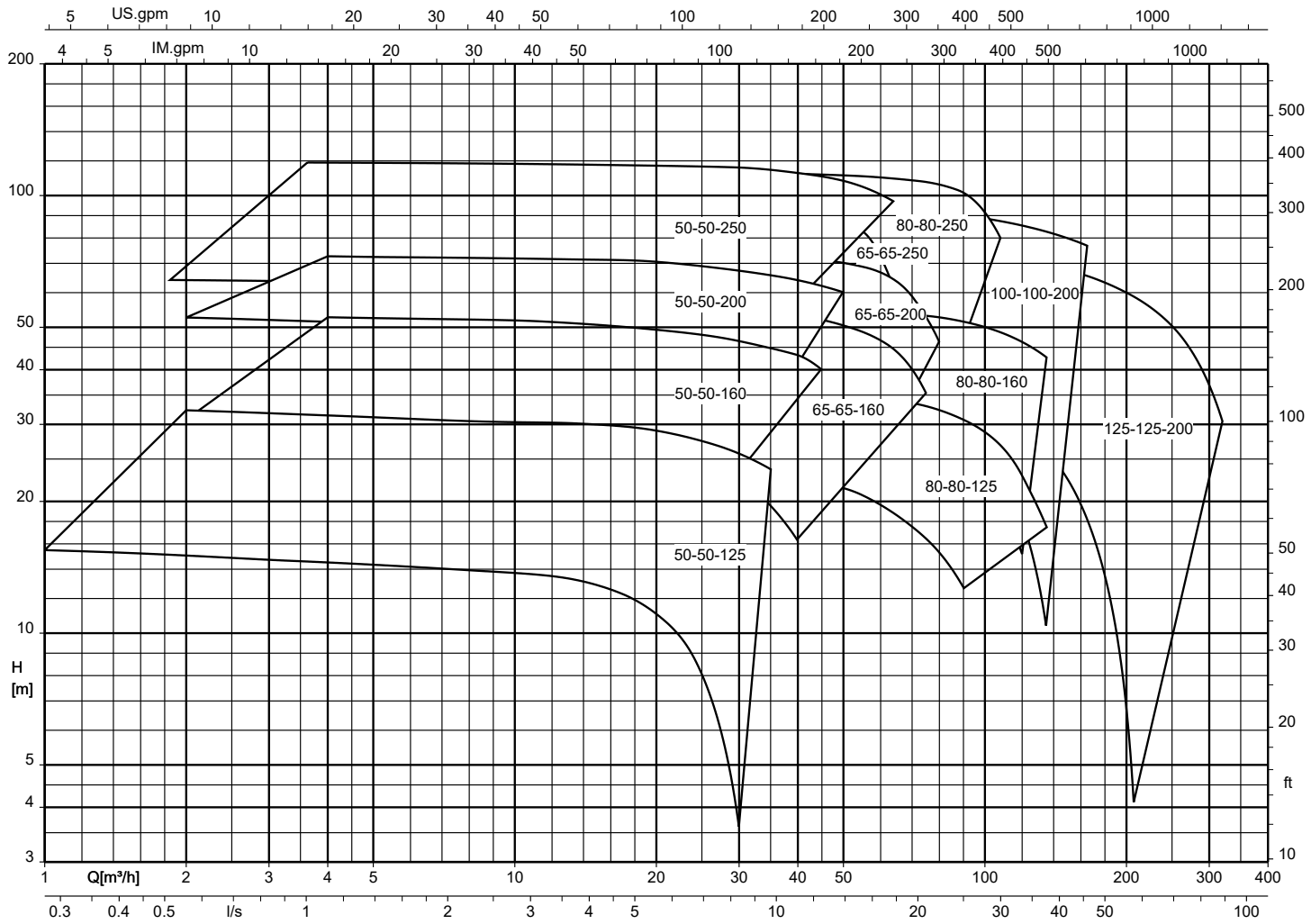

Characteristic curves

Vitachrom (fixed speed version)

Related documents

Table 9: Information/documents

Document	Reference number
Characteristic curves booklet (50 Hz/60 Hz) Fixed speed version	1966.41

Vitachrom (variable speed version)

Related documents

Table 10: Information/documents

Document	Reference number
Characteristic curves booklet (50 Hz) Variable speed version	1966.4

Dimensions and connections

Overview of general arrangement drawings

Table 11: Overview

Size	Speed [rpm]				Installation type				See
	1450	1750	2900	3500	With motor feet	With angle foot	With ball feet	With motor shroud	
DN 50	-	-	✘	✘	✘	✘	-	-	(⇨ Page 19)
	-	-	✘	✘	-	-	✘	✘	(⇨ Page 21)
	✘	✘	-	-	✘	✘	-	-	(⇨ Page 47)
	✘	✘	-	-	-	-	✘	✘	(⇨ Page 48)
DN 65	-	-	✘	✘	✘	✘	-	-	(⇨ Page 25)
	-	-	✘	✘	-	-	✘	✘	(⇨ Page 27)
	✘	✘	-	-	✘	✘	-	-	(⇨ Page 51)
	✘	✘	-	-	-	-	✘	✘	(⇨ Page 52)
DN 80	-	-	✘	✘	✘	✘	-	-	(⇨ Page 32)
	-	-	✘	✘	-	-	✘	✘	(⇨ Page 34)
	✘	✘	-	-	✘	✘	-	-	(⇨ Page 55)
	✘	✘	-	-	-	-	✘	✘	(⇨ Page 56)
DN 100	-	-	✘	✘	✘	-	-	-	(⇨ Page 41)
	-	-	✘	✘	-	-	✘	✘	(⇨ Page 42)
	✘	✘	-	-	✘	✘	-	-	(⇨ Page 59)
	✘	✘	-	-	-	-	✘	✘	(⇨ Page 60)
DN 125	-	-	✘	✘	✘	-	-	-	(⇨ Page 44)
	-	-	✘	✘	-	-	✘	✘	(⇨ Page 45)
	✘	✘	-	-	✘	✘	-	-	(⇨ Page 62)
	✘	✘	-	-	-	-	✘	✘	(⇨ Page 63)

Applies to all of the following general arrangement drawings:

- Tolerances of mating dimensions to EN 735
- Mating dimensions for pumps with different pump connections on request

Overview of motor soleplates

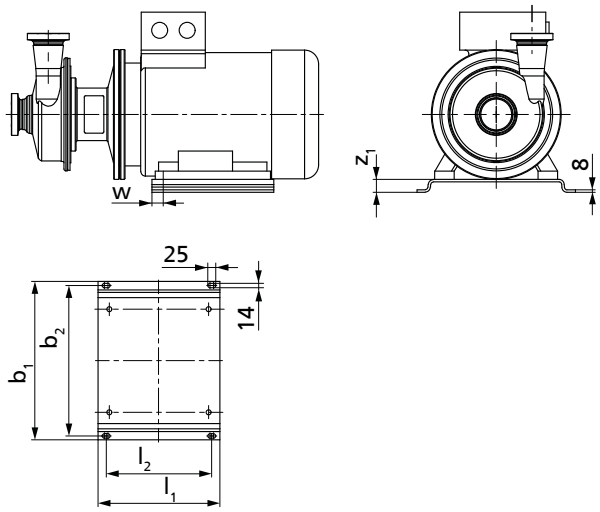

Fig. 1: Motor soleplate dimensions [mm]

Table 12: Combinations

Motor	Motor soleplate	Dimensions [mm]						Variant
		b_1	b_2	l_1	l_2	w	z_1	
90S	G1	400	375	350	300	28	70	05
90L	G1	400	375	350	300	28	70	08
100L	G1	400	375	350	300	28	70	04
112M	G1	400	375	350	300	28	70	01
132S	G1	400	375	350	300	30	70	06
132M	G1	400	375	350	300	30	70	07
160M	G2	488	463	375	325	33	40	04
160L	G2	488	463	375	325	33	40	05
180M	G2	488	463	375	325	33	40	02
180L	G2	488	463	375	325	33	40	07
200L	G2	488	463	375	325	35	40	03

1966.5/12-EN

Vitachrom DN 50, n ≈ 2900 rpm / 3500 rpm

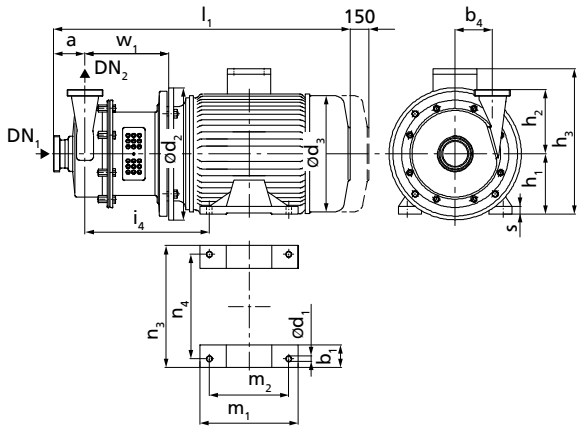

Pump set with motor feet

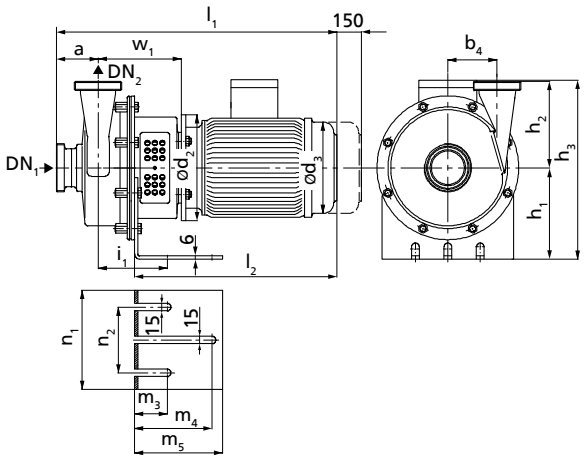

Pump set with angle foot

Table 13: Overview of mating dimensions DN 50, pump set with motor feet or angle foot, dimensions in [mm]

Size	DN_1	DN_2	a	$\approx b_1$	b_4	d_1	d_2	$\approx d_3$	h_1	h_2 6)	h_2 7)	$\approx h_3$	i_1	i_4	$\approx l_1$ 6)	$\approx l_1$ 7)	$\approx l_2$	m_1	m_2	m_3	m_4	m_5	n_1	n_2	n_3	n_4	w_1	s
050-050-125 /152	50	50	70	-	70	10	200	190	160	145	160	288	140	220	516	516	371	165	140	65	155	176	225	130	143	100	164	10
050-050-125 /222	50	50	70	-	70	10	200	190	160	145	160	288	140	220	542	542	397	165	140	65	155	176	225	130	143	125	164	10
050-050-125 /302	50	50	70	-	70	12	250	213	160	145	160	295	140	237	591	591	446	196	160	65	155	176	225	130	176	140	174	12
050-050-125 /402	50	50	70	-	70	12	250	234	160	145	160	308	140	244	615	615	470	226	190	65	155	176	225	130	176	140	174	12
050-050-160 /222	50	50	70	-	85	10	200	190	160	170	185	288	140	220	542	542	397	165	140	65	155	176	236	130	143	125	164	10
050-050-160 /302	50	50	70	-	85	12	250	213	160	170	185	295	140	237	591	591	446	196	160	65	155	176	236	130	176	140	174	12
050-050-160 /402	50	50	70	-	85	12	250	234	160	170	185	308	140	244	615	615	470	226	190	65	155	176	236	130	176	140	174	12
050-050-160 /552	50	50	70	55	85	12	300	266	132	170	185	299	-	283	677	677	-	220	140	-	-	-	-	-	270	216	194	15
050-050-160 /752	50	50	70	55	85	12	300	266	132	170	185	299	-	283	677	677	-	220	140	-	-	-	-	-	270	216	194	15
050-050-160 /1102	50	50	70	70	85	15	350	325	160	170	185	357	-	332	840	840	-	300	210	-	-	-	-	-	320	254	224	21
050-050-160 /1502	50	50	70	70	85	15	350	325	160	170	185	357	-	332	840	840	-	300	210	-	-	-	-	-	320	254	224	21
050-050-200 /302	50	50	70	-	100	12	250	213	160	170	185	295	140	237	591	591	446	196	160	65	155	176	264	130	176	140	174	12
050-050-200 /402	50	50	70	-	100	12	250	234	160	170	185	308	140	244	615	615	470	226	190	65	155	176	264	130	176	140	174	12
050-050-200 /552	50	50	70	55	100	12	300	266	132	170	185	299	-	283	677	677	-	220	140	-	-	-	-	-	270	216	194	15
050-050-200 /752	50	50	70	55	100	12	300	266	132	170	185	299	-	283	677	677	-	220	140	-	-	-	-	-	270	216	194	15
050-050-200 /1102	50	50	70	70	100	15	350	325	160	170	185	357	-	332	840	840	-	300	210	-	-	-	-	-	320	254	224	21
050-050-200 /1502	50	50	70	70	100	15	350	325	160	170	185	357	-	332	840	840	-	300	210	-	-	-	-	-	320	254	224	21

6 Applicable to connections as per DIN 11851 (hygienic pipe union)
7 Applicable to flanged connections to EN 1092-1

Size	DN_1	DN_2	a	$\approx b_1$	b_4	d_1	d_2	$\approx d_3$	h_1	h_2 [6]	h_2 [7]	$\approx h_3$	i_1	i_4	$\approx l_1$ [6]	$\approx l_1$ [7]	$\approx l_2$	m_1	m_2	m_3	m_4	m_5	n_1	n_2	n_3	n_4	w_1	s
050-050-200 /1852	50	50	70	70	100	15	350	325	160	170	185	357	-	332	846	846	-	314	254	-	-	-	-	-	320	254	224	21
050-050-200 /2202	50	50	70	80	100	15	350	370	180	170	185	442	-	345	904	904	-	320	241	-	-	-	-	-	360	279	224	23
050-050-250 /552	50	50	95[6] (90)[7]	55	125	12	300	266	132	185	195	299	-	285,5	711	706	-	220	140	-	-	-	-	-	270	216	196,5	15
050-050-250 /752	50	50		55	125	12	300	266	132	185	195	299	-	285,5	711	706	-	220	140	-	-	-	-	-	270	216	196,5	15
050-050-250 /1102	50	50		70	125	15	350	325	160	185	195	357	-	337,5	877	872	-	300	210	-	-	-	-	-	320	254	229,5	21
050-050-250 /1502	50	50		70	125	15	350	325	160	185	195	357	-	337,5	877	872	-	300	210	-	-	-	-	-	320	254	229,5	21
050-050-250 /1852	50	50		70	125	15	350	325	160	185	195	357	-	337,5	883	878	-	314	254	-	-	-	-	-	320	254	229,5	21
050-050-250 /2202	50	50		80	125	15	350	370	180	185	195	442	-	350,5	941	936	-	320	241	-	-	-	-	-	360	279	229,5	23
050-050-250 /3002	50	50		85	125	19	400	422	200	185	195	505	-	362,5	1000	995	-	388	305	-	-	-	-	-	400	318	229,5	30
050-050-250 /3702	50	50		85	125	19	400	422	200	185	195	505	-	362,5	1000	995	-	388	305	-	-	-	-	-	400	318	229,5	30
050-050-250 /4502	50	50		100	125	19	450	468	225	185	195	550	-	378,5	1086	1081	-	410	311	-	-	-	-	-	450	356	229,5	35
050-050-250 /5502	50	50		100	125	24	550	520	250	185	195	642	-	431,5	1182	1177	-	425	349	-	-	-	-	-	506	406	263,5	40

Vitachrom DN 50, n ≈ 2900 rpm / 3500 rpm, pump set with ball feet and motor shroud

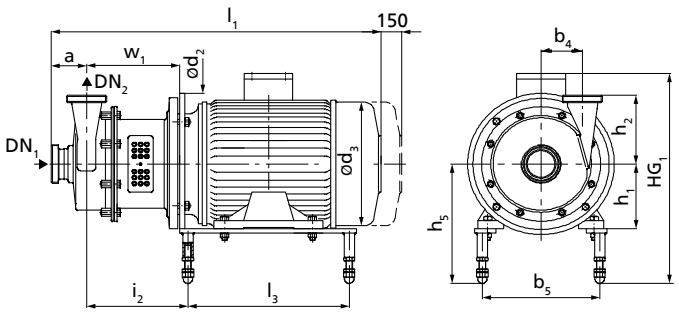

Pump set with ball feet

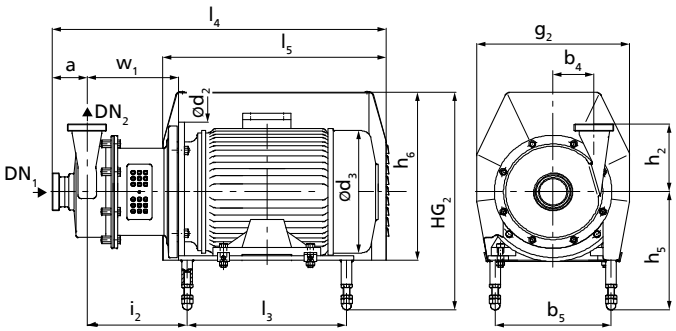

Pump set with ball feet and motor shroud

Table 14: Overview of mating dimensions DN 50, pump set with ball feet and motor shroud, dimensions in [mm]

Size	DN 1	DN 2	a	b_4	b_5	d_2	d_3	g_2	h_1	h_2 [8]	h_2 [9]	h_5 min	h_5 max	h_6	≈HG_1 max	≈HG_2 max	i_2	l_1 [8]	l_1 [9]	l_3	l_4	l_5	w_1
050-050-125 /152	50	50	70	70	200	200	190	264	90	145	160	213	248	305	376	437	158	516	516	225	646,5	450	164
050-050-125 /222	50	50	70	70	200	200	190	264	90	145	160	213	248	305	376	437	170	542	542	225	646,5	450	164
050-050-125 /302	50	50	70	70	200	250	213	264	100	145	160	223	258	305	393	437	175	591	591	265	686,5	470	174
050-050-125 /402	50	50	70	70	200	250	234	264	112	145	160	222	257	305	405	437	182	615	615	265	682,5	470	174
050-050-160 /222	50	50	70	85	200	200	190	264	90	170	185	213	248	305	376	437	170	542	542	225	646,5	450	164
050-050-160 /302	50	50	70	85	200	250	213	264	100	170	185	223	258	305	393	437	175	591	591	265	686,5	470	174
050-050-160 /402	50	50	70	85	200	250	234	264	112	170	185	222	257	305	405	437	182	615	615	265	682,5	470	174
050-050-160 /552	50	50	70	85	230	300	266	314	132	170	185	242	277	350	444	482	211	677	677	285	749,5	550	194
050-050-160 /752	50	50	70	85	230	300	266	314	132	170	185	242	277	350	444	482	211	677	677	285	749,5	550	194
050-050-160 /1102	50	50	70	85	280	350	325	372	160	170	185	270	305	423	502	555	245	840	840	385	915,5	720	224
050-050-160 /1502	50	50	70	85	280	350	325	372	160	170	185	270	305	423	502	555	245	840	840	385	915,5	720	224
050-050-200 /302	50	50	70	100	200	250	213	264	100	170	185	223	258	305	393	437	175	591	591	265	686,5	470	174
050-050-200 /402	50	50	70	100	200	250	234	264	112	170	185	222	257	305	405	437	182	615	615	265	682,5	470	174
050-050-200 /552	50	50	70	100	230	300	266	314	132	170	185	242	277	350	444	482	211	677	677	285	749,5	550	194
050-050-200 /752	50	50	70	100	230	300	266	314	132	170	185	242	277	350	444	482	211	677	677	285	749,5	550	194
050-050-200 /1102	50	50	70	100	280	350	325	372	160	170	185	270	305	423	502	555	245	840	840	385	915,5	720	224
050-050-200 /1502	50	50	70	100	280	350	325	372	160	170	185	270	305	423	502	555	245	840	840	385	915,5	720	224
050-050-200 /1852	50	50	70	100	280	350	325	372	160	170	185	270	305	423	502	555	267	846	846	385	915,5	720	224
050-050-200 /2202	50	50	70	100	305	350	370	402	180	170	185	290	325	493	587	626	292	904	904	385	970,5	740	224

8 Applicable to connections as per DIN 11851 (hygienic pipe union)
9 Applicable to flanged connections to EN 1092-1

Size	DN 1	DN 2	a	b_4	b_5	d_2	d_3	g_2	h_1	h_2 8)	h_2 9)	h_5 min	h_5 max	h_6	≈HG_1 max	≈HG_2 max	i_2	l_1 8)	l_1 9)	l_3	l_4	l_5	w_1
050-050-250 /552	50	50	95 8) (90) 9)	125	230	300	266	314	132	185	195	242	277	350	444	482	153	711	706	345	870,0	550	196,5
050-050-250 /752	50	50		125	230	300	266	314	132	185	195	242	277	350	444	482	153	711	706	345	870,0	550	196,5
050-050-250 /1102	50	50		125	280	350	325	372	160	185	195	270	305	423	502	555	250	877	872	385	991,0	720	229,5
050-050-250 1502	50	50		125	280	350	325	372	160	185	195	270	305	423	502	555	250	877	872	385	991,0	720	229,5
050-050-250 /1852	50	50		125	280	350	325	372	160	185	195	270	305	423	502	555	272	883	878	385	991,0	720	229,5
050-050-250 /2202	50	50		125	305	350	370	402	180	185	195	290	325	493	587	626	297,5	941	936	385	1075	740	229,5
050-050-250 /3002	50	50		125	345	400	422	452	200	185	195	331	353	545	658	686	307,5	1000	995	415	1144	830	229,5
050-050-250 /3702	50	50		125	345	400	422	452	200	185	195	331	353	545	658	686	307,5	1000	995	415	1144	830	229,5
050-050-250 /4502	50	50		125	390	450	468	527	225	185	195	356	378	616	703	744	306,5	1086	1081	455	1279	950	229,5
050-050-250 /5502	50	50		125	440	550	520	602	250	185	195	381	403	716	795	844	358,5	1182	1177	495	1411	1055	263,5

Vitachrom DN 50, n ≈ 2900 rpm / 3500 rpm, pump set with levelling feet and motor shroud

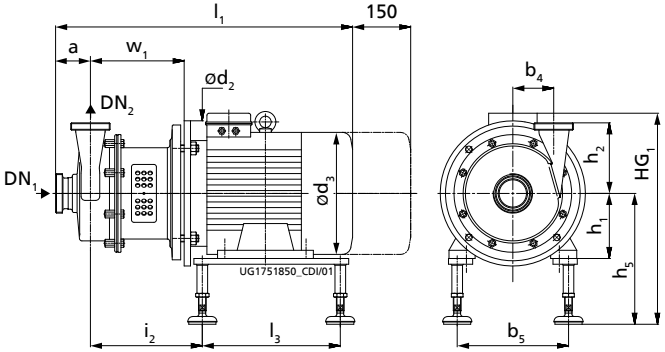

Pump set with levelling feet

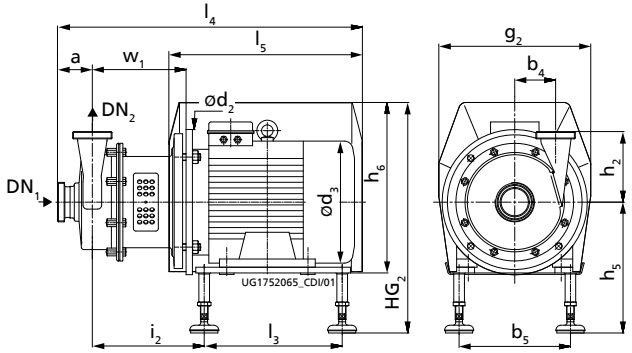

Pump set with levelling feet and motor shroud

Table 15: Overview of mating dimensions DN 50, pump set with levelling feet, dimensions in [mm]

Vitachrom	DN 1	DN 2	a	b_4	b_5	d_2	d_3	g_2	h_1	h_2 [10]	h_2 [11]	h_5 min	h_5 max	h_6	≈HG_1 max	≈HG_2 max	i_2	l_1 [10]	l_1 [11]	l_3	l_4	l_5	w_1
050-050-125 /152	50	50	70	70	200	200	190	264	90	145	160	234	256	305	384	446	158	516	516	225	646,5	450	164
050-050-125 /222	50	50	70	70	200	200	190	264	90	145	160	234	256	305	384	446	170	542	542	225	646,5	450	164
050-050-125 /302	50	50	70	70	200	250	213	264	100	145	160	244	266	305	401	446	175	591	591	265	686,5	470	174
050-050-125 /402	50	50	70	70	200	250	234	264	112	145	160	243	265	305	413	446	182	615	615	265	682,5	470	174
050-050-160 /222	50	50	70	85	200	200	190	264	90	170	185	234	256	305	384	446	170	542	542	225	646,5	450	164
050-050-160 /302	50	50	70	85	200	250	213	264	100	170	185	244	266	305	401	446	175	591	591	265	686,5	470	174
050-050-160 /402	50	50	70	85	200	250	234	264	112	170	185	243	265	305	413	446	182	615	615	265	682,5	470	174
050-050-160 /552	50	50	70	85	230	300	266	314	132	170	185	263	285	350	452	491	211	677	677	285	749,5	550	194
050-050-160 /752	50	50	70	85	230	300	266	314	132	170	185	263	285	350	452	491	211	677	677	285	749,5	550	194
050-050-160 /1102	50	50	70	85	280	350	325	372	160	170	185	291	313	423	510	564	245	840	840	385	915,5	720	224
050-050-160 /1502	50	50	70	85	280	350	325	372	160	170	185	291	313	423	510	564	245	840	840	385	915,5	720	224
050-050-160 /1852	50	50	70	85	280	350	325	372	160	170	185	291	313	423	510	564	267	846	846	385	931	720	224
050-050-160 /2202	50	50	70	85	305	350	370	402	180	170	185	311	333	493	595	634	273	904	904	385	1045	740	224
050-050-200 /302	50	50	70	100	200	250	213	264	100	170	185	244	266	305	401	446	175	591	591	265	686,5	470	174
050-050-200 /402	50	50	70	100	200	250	234	264	112	170	185	243	265	305	413	446	182	615	615	265	682,5	470	174
050-050-200 /552	50	50	70	100	230	300	266	314	132	170	185	263	285	350	452	491	211	677	677	285	749,5	550	194
050-050-200 /752	50	50	70	100	230	300	266	314	132	170	185	263	285	350	452	491	211	677	677	285	749,5	550	194
050-050-200 /1102	50	50	70	100	280	350	325	372	160	170	185	291	313	423	510	564	245	840	840	385	915,5	720	224
050-050-200 /1502	50	50	70	100	280	350	325	372	160	170	185	291	313	423	510	564	245	840	840	385	915,5	720	224

10 Applicable to connections as per DIN 11851 (hygienic pipe union)
11 Applicable to flanged connections to EN 1092-1

Vitachrom	DN 1	DN 2	a	b_4	b_5	d_2	d_3	g_2	h_1	h_2[10]	h_2[11]	h_5 min	h_5 max	h_6	≈HG_1 max	≈HG_2 max	i_2	l_1[10]	l_1[11]	l_3	l_4	l_5	w_1
050-050-200 /1852	50	50	70	100	280	350	325	372	160	170	185	291	313	423	510	564	267	846	846	385	915,5	720	224
050-050-200 /2202	50	50	70	100	305	350	370	402	180	170	185	311	333	493	595	634	292	904	904	385	970,5	740	224
050-050-250 /552	50	50	95[10] (90) [11]	125	230	300	266	314	132	185	195	275[12]	285	350	452	491	153	711	706	345	870,0	550	196,5
050-050-250 /752	50	50		125	230	300	266	314	132	185	195	275[12]	285	350	452	491	153	711	706	345	870,0	550	196,5
050-050-250 /1102	50	50		125	280	350	325	372	160	185	195	291	313	423	510	564	250	877	872	385	991,0	720	229,5
050-050-250 1502	50	50		125	280	350	325	372	160	185	195	291	313	423	510	564	250	877	872	385	991,0	720	229,5
050-050-250 /1852	50	50		125	280	350	325	372	160	185	195	291	313	423	510	564	272	883	878	385	991,0	720	229,5
050-050-250 /2202	50	50		125	305	350	370	402	180	185	195	311	333	493	595	634	297,5	941	936	385	1075	740	229,5
050-050-250 /3002	50	50		125	345	400	422	452	200	185	195	360	382	545	687	702	307,5	1000	995	415	1144	830	229,5
050-050-250 /3702	50	50		125	345	400	422	452	200	185	195	360	382	545	687	702	307,5	1000	995	415	1144	830	229,5
050-050-250 /4502	50	50		125	390	450	468	527	225	185	195	385	407	616	732	773	306,5	1086	1081	455	1279	950	229,5
050-050-250 /5502	50	50		125	440	550	520	602	250	185	195	410	432	716	824	873	358,5	1182	1177	495	1411	1055	263,5

12 Extended foot

Vitachrom DN 65, n ≈ 2900 rpm / 3500 rpm

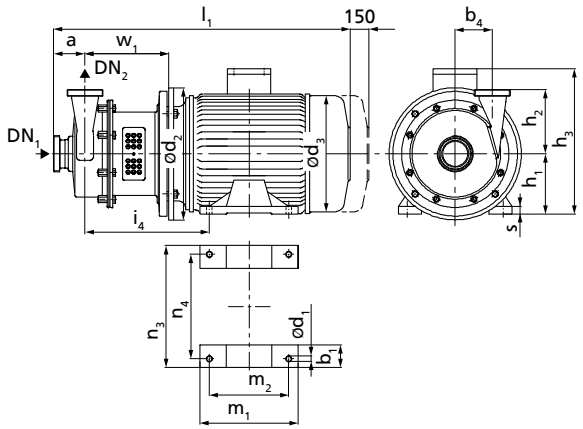

Pump set with motor feet

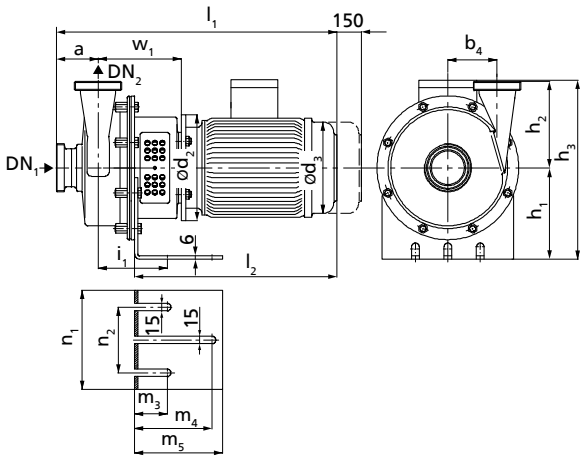

Pump set with angle foot

Table 16: Overview of mating dimensions DN 65, pump set with motor feet or angle foot, dimensions in [mm]

Size	DN_1	DN_2	a	$\approx b_1$	b_4	d_1	d_2	$\approx d_3$	h_1	h_2 [13]	h_2 [14]	$\approx h_3$	i_1	i_4	$\approx l_1$ [13]	$\approx l_1$ [14]	$\approx l_2$	m_1	m_2	m_3	m_4	m_5	n_1	n_2	n_3	n_4	w_1	s
065-065-125 /152	65	65	85	-	70	10	200	190	160	145	160	288	137	217	528	528	371	165	140	65	155	176	225	130	143	100	161	10
065-065-125 /222	65	65	85	-	70	10	200	190	160	145	160	288	137	217	554	554	397	165	140	65	155	176	225	130	143	125	161	10
065-065-125 /302	65	65	85	-	70	12	250	213	160	145	160	295	137	234	603	603	446	196	160	65	155	176	225	130	176	140	171	12
065-065-125 /402	65	65	85	-	70	12	250	234	160	145	160	308	137	241	627	627	470	226	190	65	155	176	225	130	176	140	171	12
065-065-160 /302	65	65	85	-	85	12	250	213	160	170	185	295	137	234	603	603	446	196	160	65	155	176	236	130	176	140	171	12
065-065-160 /402	65	65	85	-	85	12	250	234	160	170	185	308	137	241	627	627	470	226	190	65	155	176	236	130	176	140	171	12
065-065-160 /552	65	65	85	55	85	12	300	266	132	170	185	299	-	280	689	689	-	220	140	-	-	-	-	-	270	216	191	15
065-065-160 /752	65	65	85	55	85	12	300	266	132	170	185	299	-	280	689	689	-	220	140	-	-	-	-	-	270	216	191	15
065-065-160 /1102	65	65	85	70	85	15	350	325	160	170	185	357	-	329	852	852	-	300	210	-	-	-	-	-	320	254	221	21
065-065-160 /1502	65	65	85	70	85	15	350	325	160	170	185	357	-	329	852	852	-	300	210	-	-	-	-	-	320	254	221	21
065-065-160 /1852	65	65	85	70	85	15	350	325	160	170	185	357	-	329	858	858	-	314	254	-	-	-	-	-	320	254	221	21
065-065-200 /402	65	65	85	80	100	15	350	370	160	170	185	442	-	292	866	866	-	320	241	-	-	-	-	-	360	279	171	23
065-065-200 /552	65	65	85	55	100	12	300	266	132	170	185	299	-	280	689	689	-	220	140	-	-	-	-	-	270	216	191	15
065-065-200 /752	65	65	85	55	100	12	300	266	132	170	185	299	-	280	689	689	-	220	140	-	-	-	-	-	270	216	191	15
065-065-200 /1102	65	65	85	70	100	15	350	325	160	170	185	357	-	329	852	852	-	300	210	-	-	-	-	-	320	254	221	21
065-065-200 /1502	65	65	85	70	100	15	350	325	160	170	185	357	-	329	852	852	-	300	210	-	-	-	-	-	320	254	221	21
065-065-200 /1852	65	65	85	70	100	15	350	325	160	170	185	357	-	329	858	858	-	314	254	-	-	-	-	-	320	254	221	21

13 Applicable to connections as per DIN 11851 (hygienic pipe union)
14 Applicable to flanged connections to EN 1092-1

Size	DN_1	DN_2	a	$\approx b_1$	b_4	d_1	d_2	$\approx d_3$	h_1	h_2 [13]	h_2 [14]	$\approx h_3$	i_1	i_4	$\approx l_1$ [13]	$\approx l_1$ [14]	$\approx l_2$	m_1	m_2	m_3	m_4	m_5	n_1	n_2	n_3	n_4	w_1	s
065-065-200 /2202	65	65	85	80	100	15	350	370	180	170	185	442	-	342	916	916	-	320	241	-	-	-	-	-	360	279	221	23
065-065-250 /552	65	65	105 [13] (90) [14]	55	130	12	300	266	132	220	205	299	-	282	717	702	-	220	140	-	-	-	-	-	270	216	193	15
065-065-250 /752	65	65		55	130	12	300	266	132	220	205	299	-	282	717	702	-	220	140	-	-	-	-	-	270	216	193	15
065-065-250 /1102	65	65		70	130	15	350	325	160	220	205	357	-	334	883	868	-	300	210	-	-	-	-	-	320	254	226	21
065-065-250 /1502	65	65		70	130	15	350	325	160	220	205	357	-	334	883	868	-	300	210	-	-	-	-	-	320	254	226	21
065-065-250 /1852	65	65		70	130	15	350	325	160	220	205	357	-	334	889	874	-	314	254	-	-	-	-	-	320	254	226	21
065-065-250 /2202	65	65		80	130	15	350	370	180	220	205	442	-	347	947	932	-	320	241	-	-	-	-	-	360	279	226	23
065-065-250 /3002	65	65		85	130	19	400	422	200	220	205	505	-	359	1006	991	-	388	305	-	-	-	-	-	400	318	226	30
065-065-250 /3702	65	65		85	130	19	400	422	200	220	205	505	-	359	1006	991	-	388	305	-	-	-	-	-	400	318	226	30
065-065-250 /4502	65	65		100	130	19	450	468	250	220	205	550	-	375	1092	1077	-	410	311	-	-	-	-	-	450	356	226	35
065-065-250 /5502	65	65		100	130	24	550	520	250	220	205	642	-	428	1188	1173	-	425	349	-	-	-	-	-	506	406	260	40

Vitachrom DN 65, n ≈ 2900 rpm / 3500 rpm, pump set with ball feet and motor shroud

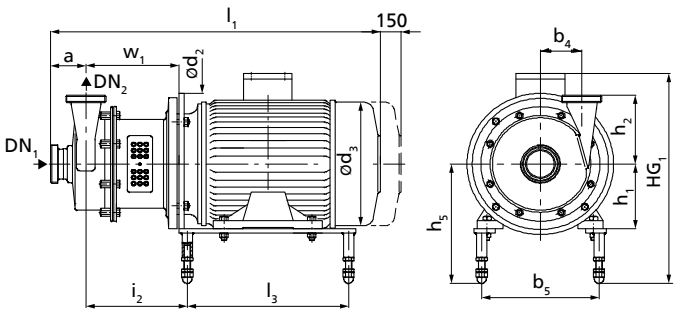

Pump set with ball feet

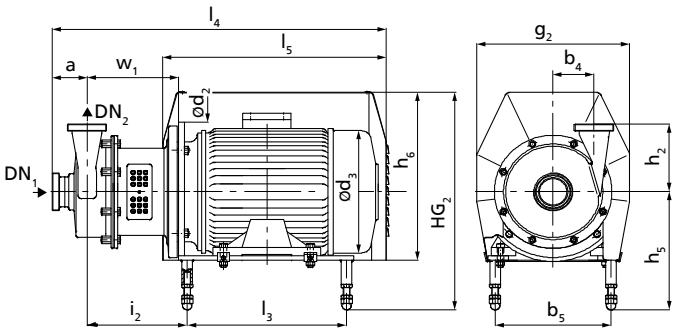

Pump set with ball feet and motor shroud

Table 17: Overview of mating dimensions DN 65, pump set with ball feet and motor shroud, dimensions in [mm]

Size	DN_1	DN_2	a	b_4	b_5	d_2	d_3	g_2	h_1	h_2[15]	h_2[16]	h_5 min	h_5 max	h_6	≈HG_1 max	≈HG_2 max	i_2	l_1[15]	l_1[16]	l_3	l_4	l_5	w_1
065-065-125 /152	65	65	85	70	200	200	190	264	90	145	160	213	248	305	376	437	155	528	528	225	658,5	450	161
065-065-125 /222	65	65	85	70	200	200	190	264	90	145	160	213	248	305	376	437	167	554	554	225	658,5	450	161
065-065-125 /302	65	65	85	70	200	250	213	264	100	145	160	223	258	305	393	437	172	603	603	265	698,5	470	171
065-065-125 /402	65	65	85	70	200	250	234	264	112	145	160	222	257	305	405	437	179	627	627	265	698,5	470	171
065-065-160 /302	65	65	85	85	200	250	213	264	100	170	185	223	258	305	393	437	172	603	603	265	698,5	470	171
065-065-160 /402	65	65	85	85	200	250	234	264	112	170	185	222	257	305	405	437	179	627	627	265	694,5	470	171
065-065-160 /552	65	65	85	85	230	300	266	314	132	170	185	242	277	350	444	482	208	689	689	285	761,5	550	191
065-065-160 /752	65	65	85	85	230	300	266	314	132	170	185	242	277	350	444	482	208	689	689	285	761,5	550	191
065-065-160 /1102	65	65	85	85	280	350	325	372	160	170	185	270	305	423	502	555	242	852	852	385	927,5	720	221
065-065-160 /1502	65	65	85	85	280	350	325	372	160	170	185	270	305	423	502	555	242	852	852	385	927,5	720	221
065-065-160 /1852	65	65	85	85	280	350	325	372	160	170	185	270	305	423	502	555	264	858	858	385	927,5	720	221
065-065-200 /402	65	65	85	100	200	350	370	264	180	170	185	290	325	305	587	437	230	866	866	265	694,5	470	171
065-065-200 /552	65	65	85	100	230	300	266	314	132	170	185	242	277	350	444	482	208	689	689	285	761,5	550	191
065-065-200 /752	65	65	85	100	230	300	266	314	132	170	185	242	277	350	444	482	208	689	689	285	761,5	550	191
065-065-200 /1102	65	65	85	100	280	350	325	372	160	170	185	270	305	423	502	555	242	852	852	385	927,5	720	221
065-065-200 /1502	65	65	85	100	280	350	325	372	160	170	185	270	305	423	502	555	242	852	852	385	927,5	720	221
065-065-200 /1852	65	65	85	100	280	350	325	372	160	170	185	270	305	423	502	555	264	858	858	385	927,5	720	221
065-065-200 /2202	65	65	85	100	305	350	370	402	180	170	185	290	325	493	587	626	251	916	916	385	982,5	740	221
065-065-250 /552	65	65	105[15] (90)[16]	130	230	300	266	314	132	220	205	242	277	350	444	482	149,5	717	702	345	876,0	550	193
065-065-250 /752	65	65		130	230	300	266	314	132	220	205	242	277	350	444	482	168,5	717	702	345	876,0	550	193

15 Applicable to connections as per DIN 11851 (hygienic pipe union)
16 Applicable to flanged connections to EN 1092-1

Size	DN_1	DN_2	a	b_4	b_5	d_2	d_3	g_2	h_1	h_2 [15]	h_2 [16]	h_5 min	h_5 max	h_6	$\approx HG_1$ max	$\approx HG_2$ max	i_2	l_1 [15]	l_1 [16]	l_3	l_4	l_5	w_1
065-065-250 /1102	65	65	105[15] (90)[16]	130	280	350	325	372	160	220	205	270	305	423	502	555	246,5	883	868	385	997,0	720	226
065-065-250 /1502	65	65		130	280	350	325	372	160	220	205	270	305	423	502	555	246,5	883	868	385	997,0	720	226
065-065-250 /1852	65	65		130	280	350	325	372	160	220	205	270	305	423	502	555	268,5	889	874	385	997,0	720	226
065-065-250 /2202	65	65		130	305	350	370	402	180	220	205	290	325	493	587	626	294	947	932	385	1081	740	226
065-065-250 /3002	65	65		130	345	400	422	452	200	220	205	331	353	545	658	686	304	1006	991	415	1148	830	226
065-065-250 /3702	65	65		130	345	400	422	452	200	220	205	331	353	545	658	686	304	1006	991	415	1148	830	226
065-065-250 /4502	65	65		130	390	450	468	527	225	220	205	356	378	616	703	744	303	1092	1077	455	1285	950	226
065-065-250 /5502	65	65		130	440	550	520	602	250	220	205	381	403	716	795	844	355	1188	1173	495	1417	1055	260

Vitachrom DN 65, n ≈ 2900 rpm / 3500 rpm, pump set with levelling feet and motor shroud

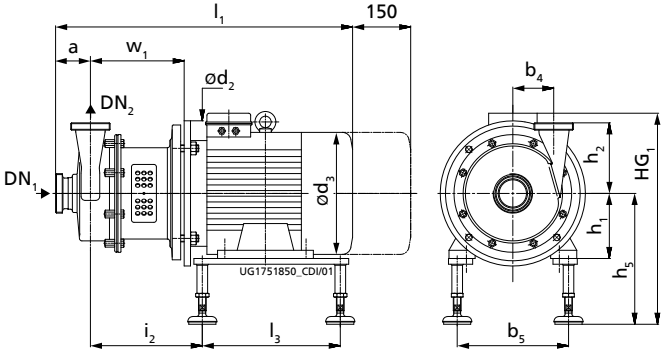

Pump set with levelling feet

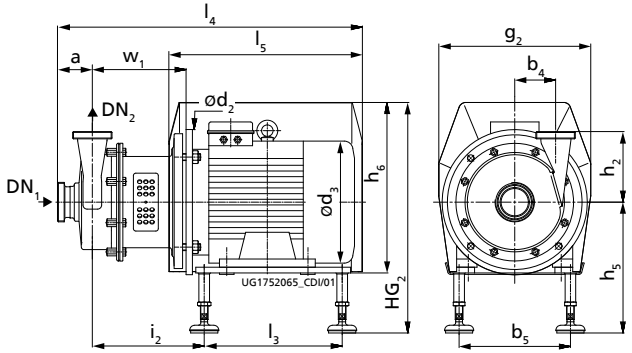

Pump set with levelling feet and motor shroud

Table 18: Overview of mating dimensions DN 65, pump set with levelling feet and motor shroud, dimensions in [mm]

Vitachrom	DN_1	DN_2	a	b_4	b_5	d_2	d_3	g_2	h_1	h_2 [17]	h_2 [18]	h_5 min	h_5 max	h_6	≈HG_1 max	≈HG_2 max	i_2	l_1 [17]	l_1 [18]	l_3	l_4	l_5	w_1
065-065-125 /152	65	65	85	70	200	200	190	264	90	145	160	234	256	305	384	446	155	528	528	225	658,5	450	161
065-065-125 /222	65	65	85	70	200	200	190	264	90	145	160	234	256	305	384	446	167	554	554	225	658,5	450	161
065-065-125 /302	65	65	85	70	200	250	213	264	100	145	160	244	266	305	401	446	172	603	603	265	698,5	470	171
065-065-125 /402	65	65	85	70	200	250	234	264	112	145	160	243	265	305	413	446	179	627	627	265	698,5	470	171
065-065-160 /302	65	65	85	85	200	250	213	264	100	170	185	244	266	305	401	446	172	603	603	265	698,5	470	171
065-065-160 /402	65	65	85	85	200	250	234	264	112	170	185	243	265	305	413	446	179	627	627	265	694,5	470	171
065-065-160 /552	65	65	85	85	230	300	266	314	132	170	185	263	285	350	452	491	208	689	689	285	761,5	550	191
065-065-160 /752	65	65	85	85	230	300	266	314	132	170	185	263	285	350	452	491	208	689	689	285	761,5	550	191
065-065-160 /1102	65	65	85	85	280	350	325	372	160	170	185	291	313	423	510	564	242	852	852	385	927,5	720	221
065-065-160 /1502	65	65	85	85	280	350	325	372	160	170	185	291	313	423	510	564	242	852	852	385	927,5	720	221
065-065-160 /1852	65	65	85	85	280	350	325	372	160	170	185	291	313	423	510	564	264	858	858	385	927,5	720	221
065-065-160 /2202	65	65	85	85	305	350	370	402	180	170	185	311	333	493	595	634	270	916	916	385	1057	740	221
065-065-200 /402	65	65	85	100	200	350	370	264	112	170	185	243	265	305	413	446	230	866	866	265	694,5	470	171
065-065-200 /552	65	65	85	100	230	300	266	314	132	170	185	263	285	350	452	491	208	689	689	285	761,5	550	191
065-065-200 /752	65	65	85	100	230	300	266	314	132	170	185	263	285	350	452	491	208	689	689	285	761,5	550	191
065-065-200 /1102	65	65	85	100	280	350	325	372	160	170	185	291	313	423	510	564	242	852	852	385	927,5	720	221
065-065-200 /1502	65	65	85	100	280	350	325	372	160	170	185	291	313	423	510	564	242	852	852	385	927,5	720	221
065-065-200 /1852	65	65	85	100	280	350	325	372	160	170	185	291	313	423	510	564	264	858	858	385	927,5	720	221
065-065-200 /2202	65	65	85	100	305	350	370	402	180	170	185	311	333	493	595	634	251	916	916	385	982,5	740	221

17 Applicable to connections as per DIN 11851 (hygienic pipe union)
18 Applicable to flanged connections to EN 1092-1

Vitachrom	DN_1	DN_2	a	b_4	b_5	d_2	d_3	g_2	h_1	h_2[17]	h_2[18]	h_5 min	h_5 max	h_6	≈HG_1 max	≈HG_2 max	i_2	l_1[17]	l_1[18]	l_3	l_4	l_5	w_1
065-065-250 /552	65	65	105[17] (90)[18]	130	230	300	266	314	132	220	205	275[19]	285	350	452	491	149,5	717	702	345	876,0	550	193
065-065-250 /752	65	65		130	230	300	266	314	132	220	205	275[19]	285	350	452	491	168,5	717	702	345	876,0	550	193
065-065-250 /1102	65	65		130	280	350	325	372	160	220	205	291	313	423	510	564	246,5	883	868	385	997,0	720	226
065-065-250 /1502	65	65		130	280	350	325	372	160	220	205	291	313	423	510	564	246,5	883	868	385	997,0	720	226
065-065-250 /1852	65	65		130	280	350	325	372	160	220	205	291	313	423	510	564	268,5	889	874	385	997,0	720	226
065-065-250 /2202	65	65		130	305	350	370	402	180	220	205	311	333	493	595	634	294	947	932	385	1081	740	226
065-065-250 /3002	65	65		130	345	400	422	452	200	220	205	360	382	545	687	702	304	1006	991	415	1148	830	226
065-065-250 /3702	65	65		130	345	400	422	452	200	220	205	360	382	545	687	702	304	1006	991	415	1148	830	226
065-065-250 /4502	65	65		130	390	450	468	527	225	220	205	385	407	616	732	773	303	1092	1077	455	1285	950	226
065-065-250 /5502	65	65		130	440	550	520	602	250	220	205	410	432	716	824	873	355	1188	1173	495	1417	1055	260

19 Extended foot

Vitachrom DN 65 with inducer, n ≈ 2900 rpm / 3500 rpm, pump set with levelling feet and motor shroud

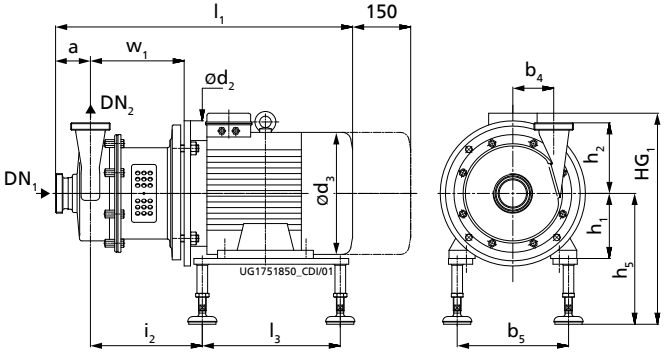

Pump set with levelling feet

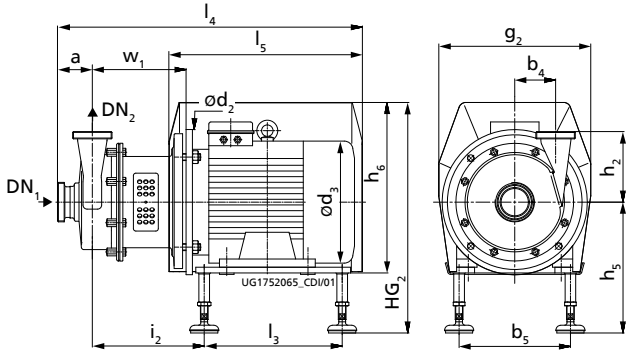

Pump set with levelling feet and motor shroud

Table 19: Overview of mating dimensions DN 65, pump set with inducer, levelling feet and motor shroud, dimensions in [mm]

Vitachrom with inducer	Inducer	DN_1	DN_2	a	b_4	b_5	d_2	$\approx d_3$	g_2	h_1	h_2[20]	h_2[21]	h_5 min	h_5 max	h_6	$\approx HG_1$ max	$\approx HG_2$ max	i_2	$\approx l_1$	l_3	l_4	l_5	w_1
065-065-160 /552	0	100	65	115	85	230	300	266	314	132	170	185	263	285	350	452	491	208	719	285	762	550	191
065-065-160 /752	0	100	65	115	85	230	300	266	314	132	170	185	263	285	350	452	491	208	719	285	762	550	191
065-065-160 /1102	0	100	65	115	85	280	350	325	372	160	170	185	291	313	423	510	564	242	882	385	928	720	221
065-065-160 /1502	0	100	65	115	85	280	350	325	372	160	170	185	291	313	423	510	564	242	882	385	928	720	221
065-065-160 /1852	0	100	65	115	85	280	350	325	372	160	170	185	291	313	423	510	564	264	888	385	928	720	221
065-065-160 /2202	0	100	65	115	85	305	350	370	402	180	170	185	311	333	493	595	634	289	946	385	1013	740	221
065-065-160 /552	1	100	65	115	85	230	300	266	314	132	170	185	263	285	350	452	491	208	719	285	762	550	191
065-065-160 /752	1	100	65	115	85	230	300	266	314	132	170	185	263	285	350	452	491	208	719	285	762	550	191
065-065-160 /1102	1	100	65	115	85	280	350	325	372	160	170	185	291	313	423	510	564	242	882	385	928	720	221
065-065-160 /1502	1	100	65	115	85	280	350	325	372	160	170	185	291	313	423	510	564	242	882	385	928	720	221
065-065-160 /1852	1	100	65	115	85	280	350	325	372	160	170	185	291	313	423	510	564	264	888	385	928	720	221
065-065-160 /2202	1	100	65	115	85	305	350	370	402	180	170	185	311	333	493	595	634	289	946	385	1013	740	221
065-065-160 /552	2	100	65	115	85	230	300	266	314	132	170	185	263	285	350	452	491	208	719	285	762	550	191
065-065-160 /752	2	100	65	115	85	230	300	266	314	132	170	185	263	285	350	452	491	208	719	285	762	550	191
065-065-160 /1102	2	100	65	115	85	280	350	325	372	160	170	185	291	313	423	510	564	242	882	385	928	720	221
065-065-160 /1502	2	100	65	115	85	280	350	325	372	160	170	185	291	313	423	510	564	242	882	385	928	720	221
065-065-160 /1852	2	100	65	115	85	280	350	325	372	160	170	185	291	313	423	510	564	264	888	385	928	720	221
065-065-160 /2202	2	100	65	115	85	305	350	370	402	180	170	185	311	333	493	595	634	289	946	385	1013	740	221

20 Applicable to connections as per DIN 11851 (hygienic pipe union)
21 Applicable to flanged connections to EN 1092-1

Vitachrom DN 80, n ≈ 2900 rpm / 3500 rpm

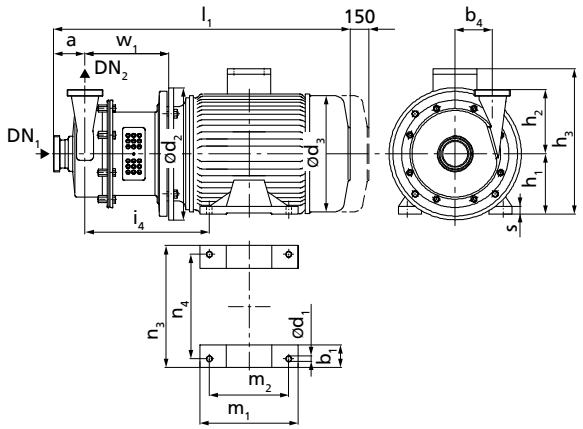

Pump set with motor feet

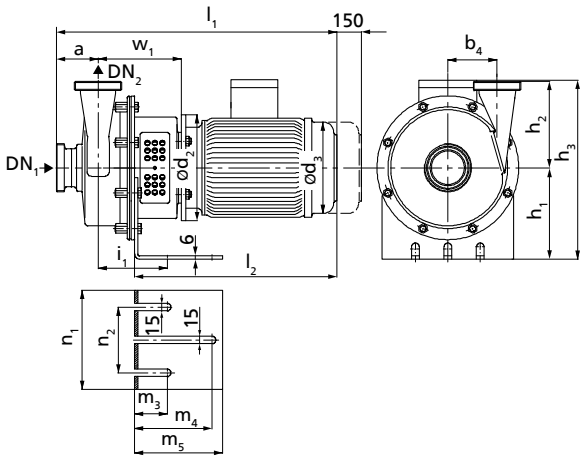

Pump set with angle foot

Table 20: Overview of mating dimensions DN 80, pump set with motor feet or angle foot, dimensions in [mm]

Size	DN_1	DN_2	a	$\approx b_1$	b_4	d_1	d_2	$\approx d_3$	h_1	h_2 22)	h_2 23)	$\approx h_3$	i_1	i_4	$\approx l_1$ 22)	$\approx l_1$ 23)	$\approx l_2$	m_1	m_2	m_3	m_4	m_5	n_1	n_2	n_3	n_4	w_1	s
080-080-125 /402	80	80	100	-	85	12	250	234	160	170	185	308	144,5	248,5	650	650	470	226	190	65	155	176	236	130	176	140	178,5	12
080-080-125 /552	80	80	100	55	85	12	300	266	132	170	185	299	-	287,5	712	712	-	220	140	-	-	-	-	-	270	216	198,5	15
080-080-125 /752	80	80	100	55	85	12	300	266	132	170	185	299	-	287,5	712	712	-	220	140	-	-	-	-	-	270	216	198,5	15
080-080-125 /1102	80	80	100	70	85	15	350	325	160	170	185	357	-	336,5	875	875	-	300	210	-	-	-	-	-	320	254	228,5	21
080-080-125 /1502	80	80	100	70	85	15	350	325	160	170	185	357	-	336,5	875	875	-	300	210	-	-	-	-	-	320	254	228,5	21
080-080-125 /1852	80	80	100	70	85	15	350	325	160	170	185	357	-	336,5	881	881	-	314	254	-	-	-	-	-	320	254	228,5	21
080-080-160 /552	80	80	100	55	85	12	300	266	132	170	185	299	-	287,5	712	712	-	220	140	-	-	-	-	-	270	216	198,5	15
080-080-160 /752	80	80	100	55	85	12	300	266	132	170	185	299	-	287,5	712	712	-	220	140	-	-	-	-	-	270	216	198,5	15
080-080-160 /1102	80	80	100	70	85	15	350	325	160	170	185	357	-	336,5	875	875	-	300	210	-	-	-	-	-	320	254	228,5	21
080-080-160 /1502	80	80	100	70	85	15	350	325	160	170	185	357	-	336,5	875	875	-	300	210	-	-	-	-	-	320	254	228,5	21
080-080-160 /1852	80	80	100	70	85	15	350	325	160	170	185	357	-	336,5	881	891	-	314	254	-	-	-	-	-	320	254	228,5	21
080-080-160 /2202	80	80	100	80	85	15	350	370	180	170	185	442	-	349,5	939	939	-	320	241	-	-	-	-	-	360	279	228,5	23
080-080-250 /752	80	80	115 22) (95) 23)	55	125	12	300	266	132	225	205	299	-	279,5	725	705	-	220	140	-	-	-	-	-	270	216	190,5	15
080-080-250 /1102	80	80		70	125	15	350	325	160	225	205	357	-	331,5	891	871	-	300	210	-	-	-	-	-	320	254	223,5	21
080-080-250 /1502	80	80		70	125	15	350	325	160	225	205	357	-	331,5	891	871	-	300	210	-	-	-	-	-	320	254	223,5	21
080-080-250 /1852	80	80		70	125	15	350	325	160	225	205	357	-	331,5	897	877	-	314	254	-	-	-	-	-	320	254	223,5	21
080-080-250 /2202	80	80		80	125	15	350	370	180	225	205	442	-	344,5	955	935	-	320	241	-	-	-	-	-	360	279	223,5	23

22 Applicable to connections as per DIN 11851 (hygienic pipe union)
23 Applicable to flanged connections to EN 1092-1

Size	DN_1	DN_2	a	$\approx b_1$	b_4	d_1	d_2	$\approx d_3$	h_1	h_2 [22]	h_2 [23]	$\approx h_3$	i_1	i_4	$\approx l_1$ [22]	$\approx l_1$ [23]	$\approx l_2$	m_1	m_2	m_3	m_4	m_5	n_1	n_2	n_3	n_4	w_1	s
080-080-250 /3002	80	80	115 [22] (95) [23]	85	125	19	400	422	200	225	205	505	-	356,5	1014	994	-	388	305	-	-	-	-	-	400	318	223,5	30
080-080-250 /3702	80	80		85	125	19	400	422	200	225	205	505	-	356,5	1014	994	-	388	305	-	-	-	-	-	400	318	223,5	30
080-080-250 /4502	80	80		100	125	19	450	468	225	225	205	550	-	372,5	1100	1080	-	410	311	-	-	-	-	-	450	356	223,5	35
080-080-250 /5502	80	80		100	125	24	550	520	250	225	205	642	-	425,5	1196	1176	-	425	349	-	-	-	-	-	506	406	257,5	40

Vitachrom DN 80, n ≈ 2900 rpm / 3500 rpm, pump set with ball feet and motor shroud

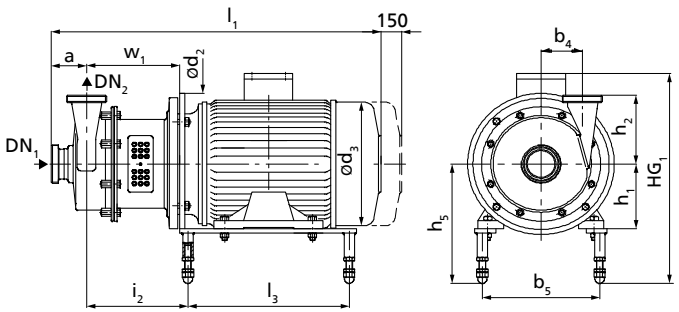

Pump set with ball feet

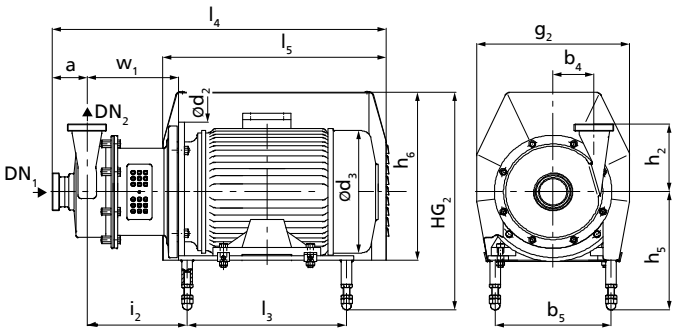

Pump set with ball feet and motor shroud

Table 21: Overview of mating dimensions DN 80, pump set with ball feet and motor shroud, dimensions in [mm]

Size	DN_1	DN_2	a	b_4	b_5	d_2	d_3	g_2	h_1	h_2[24]	h_2[25]	h_5 min	h_5 max	h_6	≈HG_1 max	≈HG_2 max	i_2	l_1[24]	l_1[25]	l_3	l_4	l_5	w_1
080-080-125 /402	80	80	100	85	200	250	234	264	112	170	185	222	257	305	405	437	186	650	650	265	717	470	179
080-080-125 /552	80	80	100	85	230	300	266	314	132	170	185	242	277	350	444	482	215	712	712	285	784	550	199
080-080-125 /752	80	80	100	85	230	300	266	314	132	170	185	242	277	350	444	482	215	712	712	285	784	550	199
080-080-125 /1102	80	80	100	85	280	350	325	372	160	170	185	270	305	423	502	555	249	875	875	385	950	720	229
080-080-125 /1502	80	80	100	85	280	350	325	372	160	170	185	270	305	423	502	555	249	875	875	385	950	720	229
080-080-125 /1852	80	80	100	85	280	350	325	372	160	170	185	270	305	423	502	555	271	881	881	385	950	720	229
080-080-160 /552	80	80	100	85	230	300	266	314	132	170	185	242	277	350	444	482	215	712	712	285	784	550	199
080-080-160 /752	80	80	100	85	230	300	266	314	132	170	185	242	277	350	444	482	215	712	712	285	784	550	199
080-080-160 /1102	80	80	100	85	280	350	325	372	160	170	185	270	305	423	502	555	249	875	875	385	950	720	229
080-080-160 /1502	80	80	100	85	280	350	325	372	160	170	185	270	305	423	502	555	249	875	875	385	950	720	229
080-080-160 /1852	80	80	100	85	280	350	325	372	160	170	185	270	305	423	502	555	271	881	881	385	950	720	229
080-080-160 /2202	80	80	100	85	305	350	370	402	180	170	185	290	325	493	587	626	259	939	939	385	1005	740	229
080-080-250 /752	80	80	115[24] (95)[25]	125	230	300	266	314	132	225	205	242	277	350	444	482	147	725	705	345	884	550	190,5
080-080-250 /1102	80	80		125	280	350	325	372	160	225	205	270	305	423	502	555	244	891	871	385	1005	720	223,5
080-080-250 /1502	80	80		125	280	350	325	372	160	225	205	270	305	423	502	555	244	891	871	385	1005	720	223,5
080-080-250 /1852	80	80		125	280	350	325	372	160	225	205	270	305	423	502	555	266	897	877	385	1005	720	223,5
080-080-250 /2202	80	80		125	305	350	370	402	180	225	205	290	325	493	587	626	291	955	935	385	1091	740	223,5
080-080-250 /3002	80	80		125	345	400	422	452	200	225	205	331	353	545	658	686	301,5	1014	994	415	1156	830	223,5
080-080-250 /3702	80	80		125	345	400	422	452	200	225	205	331	353	545	658	686	301,5	1014	994	415	1156	830	223,5
080-080-250 /4502	80	80		125	390	450	468	527	225	225	205	356	378	616	703	744	300,5	1100	1080	455	1148	950	223,5

24 Applicable to connections as per DIN 11851 (hygienic pipe union)
25 Applicable to flanged connections to EN 1092-1

Size	DN_1	DN_2	a	b_4	b_5	d_2	d_3	g_2	h_1	h_2[24]	h_2[25]	h_5 min	h_5 max	h_6	$\approx HG_1$ max	$\approx HG_2$ max	i_2	l_1[24]	l_1[25]	l_3	l_4	l_5	w_1
080-080-250 /5502	80	80	115[24] (95)[25]	125	440	550	520	602	250	225	205	381	403	716	795	844	352,5	1196	1176	495	1425	1055	257,5

Vitachrom DN 80, n ≈ 2900 rpm / 3500 rpm, pump set with levelling feet and motor shroud

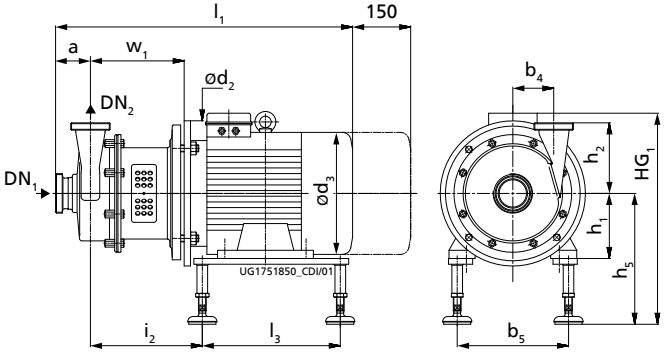

Pump set with levelling feet

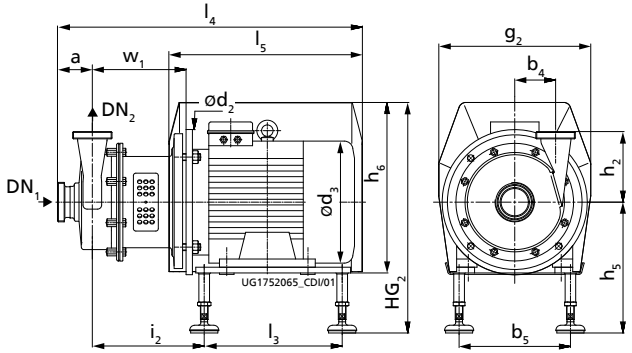

Pump set with levelling feet and motor shroud

Table 22: Overview of mating dimensions DN 80, pump set with levelling feet and motor shroud, dimensions in [mm]

Vitachrom	DN_1	DN_2	a	b_4	b_5	d_2	d_3	g_2	h_1	h_2[26]	h_2[27]	h_5 min	h_5 max	h_6	≈HG_1 max	≈HG_2 max	i_2	l_1[26]	l_1[27]	l_3	l_4	l_5	w_1
080-080-125 /402	80	80	100	85	200	250	234	264	112	170	185	243	265	305	413	446	186	650	650	265	717	470	179
080-080-125 /552	80	80	100	85	230	300	266	314	132	170	185	263	285	350	452	491	215	712	712	285	784	550	199
080-080-125 /752	80	80	100	85	230	300	266	314	132	170	185	263	285	350	452	491	215	712	712	285	784	550	199
080-080-125 /1102	80	80	100	85	280	350	325	372	160	170	185	291	313	423	510	564	249	875	875	385	950	720	229
080-080-125 /1502	80	80	100	85	280	350	325	372	160	170	185	291	313	423	510	564	249	875	875	385	950	720	229
080-080-125 /1852	80	80	100	85	280	350	325	372	160	170	185	291	313	423	510	564	271	881	881	385	950	720	229
080-080-125 /2202	80	80	100	85	305	350	370	402	180	170	185	311	333	493	595	634	278	939	939	385	1080	740	229
080-080-160 /552	80	80	100	85	230	300	266	314	132	170	185	263	285	350	452	491	215	712	712	285	784	550	199
080-080-160 /752	80	80	100	85	230	300	266	314	132	170	185	263	285	350	452	491	215	712	712	285	784	550	199
080-080-160 /1102	80	80	100	85	280	350	325	372	160	170	185	291	313	423	510	564	249	875	875	385	950	720	229
080-080-160 /1502	80	80	100	85	280	350	325	372	160	170	185	291	313	423	510	564	249	875	875	385	950	720	229
080-080-160 /1852	80	80	100	85	280	350	325	372	160	170	185	291	313	423	510	564	271	881	881	385	950	720	229
080-080-160 /2202	80	80	100	85	305	350	370	402	180	170	185	311	333	493	595	634	259	939	939	385	1005	740	229
080-080-250 /752	80	80	115[26] (95)[27]	125	230	300	266	314	132	225	205	275[28]	285	350	452	491	147	725	705	345	884	550	190,5
080-080-250 /1102	80	80		125	280	350	325	372	160	225	205	291	313	423	510	564	244	891	871	385	1005	720	223,5
080-080-250 /1502	80	80		125	280	350	325	372	160	225	205	291	313	423	510	564	244	891	871	385	1005	720	223,5
080-080-250 /1852	80	80		125	280	350	325	372	160	225	205	291	313	423	510	564	266	897	877	385	1005	720	223,5
080-080-250 /2202	80	80		125	305	350	370	402	180	225	205	311	333	493	595	634	291	955	935	385	1091	740	223,5

26 Applicable to connections as per DIN 11851 (hygienic pipe union)
27 Applicable to flanged connections to EN 1092-1
28 Extended foot

Vitachrom	DN_1	DN_2	a	b_4	b_5	d_2	d_3	g_2	h_1	h_2[26]	h_2[27]	h_5 min	h_5 max	h_6	≈HG_1 max	≈HG_2 max	i_2	l_1[26]	l_1[27]	l_3	l_4	l_5	w_1
080-080-250 /3002	80	80	115[26] (95)[27]	125	345	400	422	452	200	225	205	360	382	545	687	702	301,5	1014	994	415	1156	830	223,5
080-080-250 /3702	80	80		125	345	400	422	452	200	225	205	360	382	545	687	702	301,5	1014	994	415	1156	830	223,5
080-080-250 /4502	80	80		125	390	450	468	527	225	225	205	385	407	616	732	773	300,5	1100	1080	455	1148	950	223,5
080-080-250 /5502	80	80		125	440	550	520	602	250	225	205	410	432	716	824	873	352,5	1196	1176	495	1425	1055	257,5

Vitachrom DN 80 with inducer, n ≈ 2900 rpm, pump set with levelling feet and motor shroud

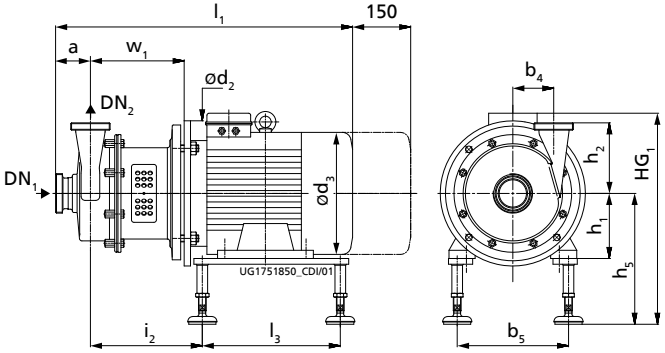

Pump set with levelling feet

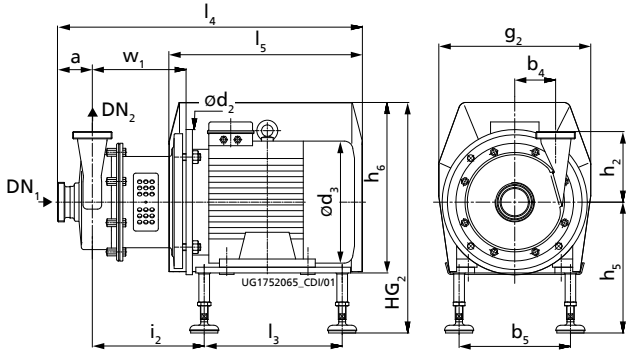

Pump set with levelling feet and motor shroud

Table 23: Overview of mating dimensions DN 80, pump set with inducer, levelling feet and motor shroud, dimensions in [mm]

Vitachrom with inducer	Inducer	DN_1	DN_2	a	b_4	b_5	d_2	$\approx d_3$	g_2	h_1	h_2	h_2	h_5 min	h_5 max	h_6	$\approx HG_1$ max	$\approx HG_2$ max	i_2	$\approx l_1$	l_3	l_4	l_5	w_1
080-080-250 /1502	0	100	80	115	125	280	350	325	372	160	225	205	291	313	423	510	564	244	891	385	1005	720	223,5
080-080-250 /1852	0	100	80	115	125	280	350	325	372	160	225	205	291	313	423	510	564	266	897	385	1005	720	223,5
080-080-250 /2202	0	100	80	115	125	305	350	370	402	180	225	205	311	333	493	595	634	291,5	955	385	1091	740	223,5
080-080-250 /3002	0	100	80	115	125	345	400	422	452	200	225	205	360	382	545	687	702	301,5	1014	415	1155	830	223,5
080-080-250 /3702	0	100	80	115	125	345	400	422	452	200	225	205	360	382	545	687	702	301,5	1014	415	1155	830	223,5
080-080-250 /4502	0	100	80	115	125	390	450	468	527	225	225	205	385	407	616	732	773	300,5	1100	455	1148	950	223,5
080-080-250 /5502	0	100	80	115	125	440	550	520	602	250	225	205	410	432	716	824	873	352,5	1196	495	1425	1055	257,5
080-080-250 /1502	1	100	80	115	125	280	350	325	372	160	225	205	291	313	423	510	564	244	891	385	1005	720	223,5
080-080-250 /1852	1	100	80	115	125	280	350	325	372	160	225	205	291	313	423	510	564	266	897	385	1005	720	223,5
080-080-250 /2202	1	100	80	115	125	305	350	370	402	180	225	205	311	333	493	595	634	291,5	955	385	1091	740	223,5
080-080-250 /3002	1	100	80	115	125	345	400	422	452	200	225	205	360	382	545	687	702	301,5	1014	415	1155	830	223,5
080-080-250 /3702	1	100	80	115	125	345	400	422	452	200	225	205	360	382	545	687	702	301,5	1014	415	1155	830	223,5
080-080-250 /4502	1	100	80	115	125	390	450	468	527	225	225	205	385	407	616	732	773	300,5	1100	455	1148	950	223,5
080-080-250 /5502	1	100	80	115	125	440	550	520	602	250	225	205	410	432	716	824	873	352,5	1196	495	1425	1055	257,5
080-080-250 /1502	2	100	80	115	125	280	350	325	372	160	225	205	291	313	423	510	564	244	891	385	1005	720	223,5
080-080-250 /1852	2	100	80	115	125	280	350	325	372	160	225	205	291	313	423	510	564	266	897	385	1005	720	223,5
080-080-250 /2202	2	100	80	115	125	305	350	370	402	180	225	205	311	333	493	595	634	291,5	955	385	1091	740	223,5
080-080-250 /3002	2	100	80	115	125	345	400	422	452	200	225	205	360	382	545	687	702	301,5	1014	415	1155	830	223,5
080-080-250 /3702	2	100	80	115	125	345	400	422	452	200	225	205	360	382	545	687	702	301,5	1014	415	1155	830	223,5
080-080-250 /4502	2	100	80	115	125	390	450	468	527	225	225	205	385	407	616	732	773	300,5	1100	455	1148	950	223,5
080-080-250 /5502	2	100	80	115	125	440	550	520	602	250	225	205	410	432	716	824	873	352,5	1196	495	1425	1055	257,5

Vitachrom DN 80 with inducer, n ≈ 3500 rpm, pump set with levelling feet and motor shroud

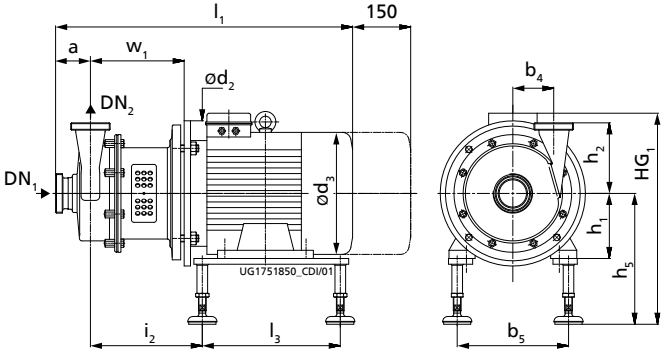

Pump set with levelling feet

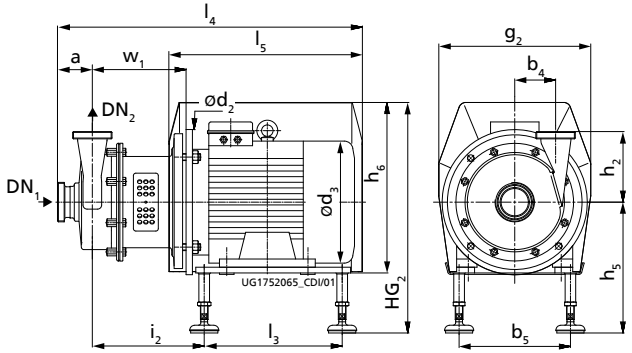

Pump set with levelling feet and motor shroud

Table 24: Overview of mating dimensions DN 80, pump set with inducer, levelling feet and motor shroud, dimensions in [mm]

Vitachrom with inducer	Inducer	DN_1	DN_2	a	b_4	b_5	d_2	$\approx d_3$	g_2	h_1	h_2 [29]	h_2 [30]	h_5 min	h_5 max	h_6	$\approx HG_1$ max	$\approx HG_2$ max	i_2	$\approx l_1$	l_3	l_4	l_5	w_1
080-080-250.1 /1502	0	100	80	115	125	280	350	325	372	160	225	205	291	313	423	510	564	244	891	385	1005	720	223,5
080-080-250.1 /1852	0	100	80	115	125	280	350	325	372	160	225	205	291	313	423	510	564	266	897	385	1005	720	223,5
080-080-250.1 /2202	0	100	80	115	125	305	350	370	402	180	225	205	311	333	493	595	634	291,5	955	385	1091	740	223,5
080-080-250.1 /3002	0	100	80	115	125	345	400	422	452	200	225	205	360	382	545	687	702	301,5	1014	415	1155	830	223,5
080-080-250.1 /3702	0	100	80	115	125	345	400	422	452	200	225	205	360	382	545	687	702	301,5	1014	415	1155	830	223,5
080-080-250.1 /4502	0	100	80	115	125	390	450	468	527	225	225	205	385	407	616	732	773	300,5	1100	455	950	950	223,5
080-080-250.1 /5502	0	100	80	115	125	440	550	520	602	250	225	205	410	432	716	824	873	352,5	1196	495	1055	1055	257,5
080-080-250.1 /1502	1	100	80	115	125	280	350	325	372	160	225	205	291	313	423	510	564	244	891	385	1005	720	223,5
080-080-250.1 /1852	1	100	80	115	125	280	350	325	372	160	225	205	291	313	423	510	564	266	897	385	1005	720	223,5
080-080-250.1 /2202	1	100	80	115	125	305	350	370	402	180	225	205	311	333	493	595	634	291,5	955	385	1091	740	223,5
080-080-250.1 /3002	1	100	80	115	125	345	400	422	452	200	225	205	360	382	545	687	702	301,5	1014	415	1155	830	223,5
080-080-250.1 /3702	1	100	80	115	125	345	400	422	452	200	225	205	360	382	545	687	702	301,5	1014	415	1155	830	223,5
080-080-250.1 /4502	1	100	80	115	125	390	450	468	527	225	225	205	385	407	616	732	773	300,5	1100	455	950	950	223,5
080-080-250.1 /5502	1	100	80	115	125	440	550	520	602	250	225	205	410	432	716	824	873	352,5	1196	495	1055	1055	257,5
080-080-250.1 /1502	2	100	80	115	125	280	350	325	372	160	225	205	291	313	423	510	564	244	891	385	1005	720	223,5
080-080-250.1 /1852	2	100	80	115	125	280	350	325	372	160	225	205	291	313	423	510	564	266	897	385	1005	720	223,5
080-080-250.1 /2202	2	100	80	115	125	305	350	370	402	180	225	205	311	333	493	595	634	291,5	955	385	1091	740	223,5
080-080-250.1 /3002	2	100	80	115	125	345	400	422	452	200	225	205	360	382	545	687	702	301,5	1014	415	1155	830	223,5

29 Applicable to connections as per DIN 11851 (hygienic pipe union)
30 Applicable to flanged connections as per EN 1092-1

Vitachrom with inducer	Inducer	DN_1	DN_2	a	b_4	b_5	d_2	$\approx d_3$	g_2	h_1	h_2 [29]	h_2 [30]	h_5 min	h_5 max	h_6	$\approx HG_1$ max	$\approx HG_2$ max	i_2	$\approx l_1$	l_3	l_4	l_5	w_1
080-080-250.1 /3702	2	100	80	115	125	345	400	422	452	200	225	205	360	382	545	687	702	301,5	1014	415	1155	830	223,5
080-080-250.1 /4502	2	100	80	115	125	390	450	468	527	225	225	205	385	407	616	732	773	300,5	1100	455	950	950	223,5
080-080-250.1 /5502	2	100	80	115	125	440	550	520	602	250	225	205	410	432	716	824	873	352,5	1196	495	1055	1055	257,5

Vitachrom DN 100, n ≈ 2900 rpm / 3500 rpm

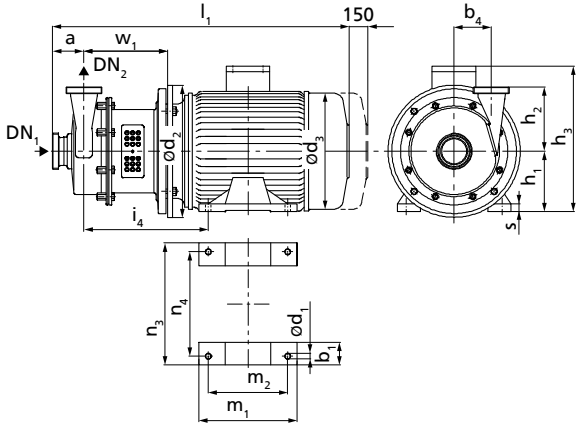

Pump set with motor feet

Table 25: Overview of mating dimensions DN 100, pump set with motor feet, dimensions in [mm]

Size	DN_1	DN_2	a	$\approx b_1$	b_4	d_1	d_2	$\approx d_3$	h_1	h_2[31]	h_2[32]	$\approx h_3$	i_4	$\approx l_1$[31]	$\approx l_1$[32]	m_1	m_2	n_3	n_4	w_1	s
100-100-200 /752	100	100	100[31] (115)[32]	55	110	12	300	266	132	250	235	299	277	707	722	220	140	270	216	188	15
100-100-200 /1102	100	100		70	110	15	350	325	160	250	235	357	329	873	888	300	210	320	254	221	21
100-100-200 /1502	100	100		70	110	15	350	325	160	250	235	357	329	873	888	300	210	320	254	221	21
100-100-200 /1852	100	100		70	110	15	350	325	160	250	235	357	329	879	894	314	254	320	254	221	21
100-100-200 /2202	100	100		80	110	15	350	370	180	250	235	442	342	937	952	320	241	360	279	221	23
100-100-200 /3002	100	100		85	110	19	400	422	200	250	235	505	354	996	1011	388	305	400	318	221	30
100-100-200 /3702	100	100		85	110	19	400	422	200	250	235	505	354	996	1011	388	305	400	318	221	30
100-100-200 /4502	100	100		100	110	19	450	468	225	250	235	550	370	1082	1097	410	311	450	356	221	35
100-100-200 /5502	100	100		100	110	24	550	520	250	250	235	642	423	1178	1193	425	349	506	406	255	40

31 Applicable to connections as per DIN 11851 (hygienic pipe union)
32 Applicable to flanged connections to EN 1092-1

Vitachrom DN 100, n ≈ 2900 rpm / 3500 rpm, pump set with ball feet and motor shroud

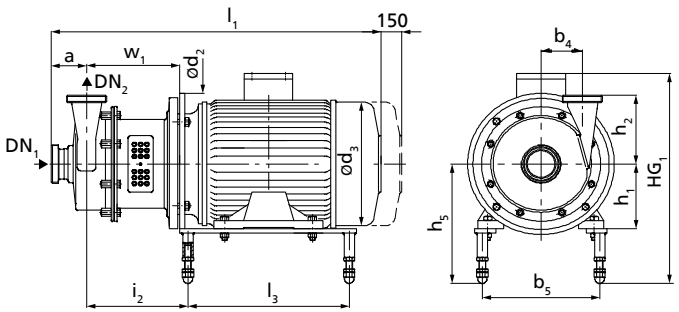

Pump set with ball feet

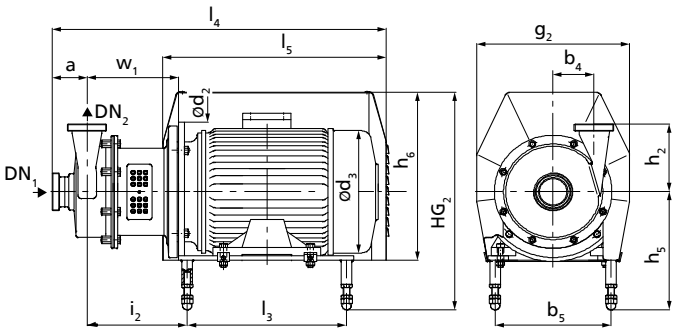

Pump set with ball feet and motor shroud

Table 26: Overview of mating dimensions DN 100, pump set with ball feet and motor shroud, dimensions in [mm]

Size	DN_1	DN_2	a	b_4	b_5	d_2	$\approx d_3$	g_2	h_1	h_2[33]	h_2[34]	h_5 min	h_5 max	h_6	$\approx HG_1$ max	$\approx HG_2$ max	i_2	$\approx l_1$[33]	l_1[34]	l_3	l_4	l_5	w_1
100-100-200 /752	100	100	100[33] (115)[34]	110	230	300	266	314	132	250	235	242	277	350	444	482	144,5	707	722	345	881	550	188
100-100-200 /1102	100	100		110	280	350	325	372	160	250	235	270	305	423	502	555	241,5	873	888	385	1002	720	221
100-100-200 /1502	100	100		110	280	350	325	372	160	250	235	270	305	423	502	555	241,5	873	888	385	1002	720	221
100-100-200 /1852	100	100		110	280	350	325	372	160	250	235	270	305	423	502	555	273,5	879	894	385	1002	720	221
100-100-200 /2202	100	100		110	305	350	370	402	180	250	235	290	325	493	587	626	289	937	952	385	1086	740	221
100-100-200 /3002	100	100		110	345	400	422	452	200	250	235	331	353	545	658	686	299	996	1011	415	1153	830	221
100-100-200 /3702	100	100		110	345	400	422	452	200	250	235	331	353	545	658	686	299	996	1011	415	1153	830	221
100-100-200 /4502	100	100		110	390	450	468	527	225	250	235	356	378	616	703	744	298	1082	1097	455	1290	950	221
100-100-200 /5502	100	100		110	440	550	520	602	250	250	235	381	403	716	795	844	350	1178	1193	495	1422	1055	255

33 Applicable to connections as per DIN 11851 (hygienic pipe union)
34 Applicable to flanged connections to EN 1092-1

Vitachrom DN 100, n ≈ 2900 rpm / 3500 rpm, pump set with levelling feet and motor shroud

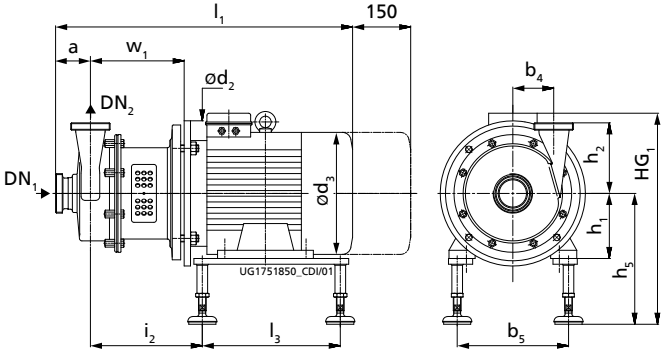

Pump set with levelling feet

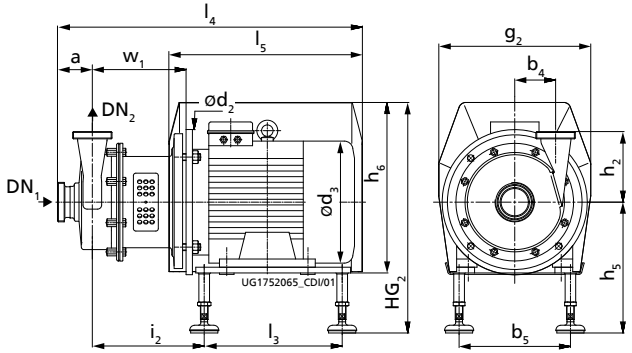

Pump set with levelling feet and motor shroud

Table 27: Overview of mating dimensions DN 100, pump set with levelling feet and motor shroud, dimensions in [mm]

Vitachrom	DN_1	DN_2	a	b_4	b_5	d_2	$\approx d_3$	g_2	h_1	h_2[35]	h_2[36]	h_5 min	h_5 max	h_6	$\approx HG_1$ max	$\approx HG_2$ max	i_2	$\approx l_1$[35]	l_1[36]	l_3	l_4	l_5	w_1
100-100-200 /752	100	100	100[35] (115)[36]	110	230	300	266	314	132	250	235	242[37]	285	350	452	491	144,5	707	722	345	881	550	188
100-100-200 /1102	100	100		110	280	350	325	372	160	250	235	270	313	423	510	564	241,5	873	888	385	1002	720	221
100-100-200 /1502	100	100		110	280	350	325	372	160	250	235	270	313	423	510	564	241,5	873	888	385	1002	720	221
100-100-200 /1852	100	100		110	280	350	325	372	160	250	235	270	313	423	510	564	273,5	879	894	385	1002	720	221
100-100-200 /2202	100	100		110	305	350	370	402	180	250	235	290	333	493	595	634	289	937	952	385	1086	740	221
100-100-200 /3002	100	100		110	345	400	422	452	200	250	235	331	382	545	687	702	299	996	1011	415	1153	830	221
100-100-200 /3702	100	100		110	345	400	422	452	200	250	235	331	382	545	687	702	299	996	1011	415	1153	830	221
100-100-200 /4502	100	100		110	390	450	468	527	225	250	235	356	407	616	732	773	298	1082	1097	455	1290	950	221
100-100-200 /5502	100	100		110	440	550	520	602	250	250	235	381	432	716	824	873	350	1178	1193	495	1422	1055	255

35 Applicable to connections as per DIN 11851 (hygienic pipe union)
36 Applicable to flanged connections to EN 1092-1
37 Extended foot

Vitachrom DN 125, n ≈ 2900 rpm

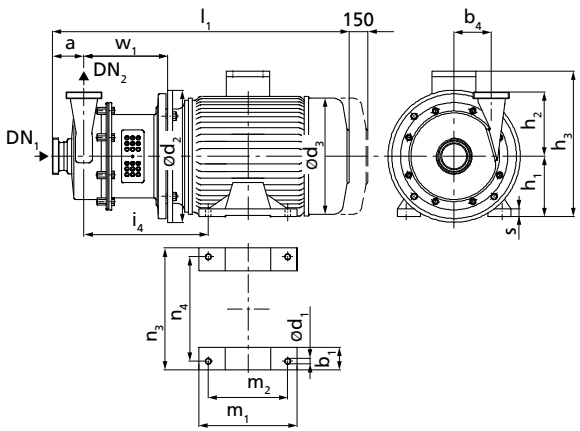

Pump set with motor feet

Table 28: Overview of mating dimensions DN 125, pump set with motor feet, dimensions in [mm]

Size	DN_1	DN_2	a	$\approx b_1$	b_4	d_1	d_2	$\approx d_3$	h_1	h_2 [38]	h_2 [39]	$\approx h_3$	i_4	$\approx l_1$ [38]	$\approx l_1$ [39]	m_1	m_2	n_3	n_4	w_1	s
125-125-200 /752	125	125	120[38] (135)[39]	55	110	12	300	266	132	250	235	299	298	748	763	220	140	270	216	209	15
125-125-200 /1102	125	125		70	110	15	350	325	160	250	235	357	350	914	929	300	210	320	254	242	21
125-125-200 /1502	125	125		70	110	15	350	325	160	250	235	357	350	914	929	300	210	320	254	242	21
125-125-200 /1852	125	125		70	110	15	350	325	160	250	235	357	350	920	935	314	254	320	254	242	21
125-125-200 /2202	125	125		80	110	15	350	370	180	250	235	442	363	978	993	320	241	360	279	242	23
125-125-200 /3002	125	125		85	110	19	400	422	200	250	235	505	375	1037	1052	388	305	400	318	242	30
125-125-200 /3702	125	125		85	110	19	400	422	200	250	235	505	375	1037	1052	388	305	400	318	242	30
125-125-200 /4502	125	125		100	110	19	450	468	225	250	235	550	391	1123	1138	410	311	450	356	242	35
125-125-200 /5502	125	125		100	110	24	550	520	250	250	235	642	444	1219	1234	425	349	506	406	276	40
125-125-200 /7502	125	125		100	110	24	550	575	280	250	235	712	466	1327	1342	480	368	557	457	276	40
125-125-200 /9002	125	125		100	110	24	550	575	280	250	235	712	466	1382	1397	530	419	557	457	276	40

38 Applicable to connections as per DIN 11851 (hygienic pipe union)
39 Applicable to flanged connections to EN 1092-1

Vitachrom DN 125, n ≈ 2900 rpm, pump set with ball feet and motor shroud

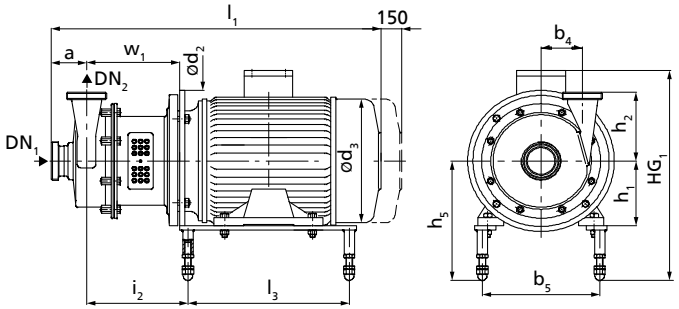

Pump set with ball feet

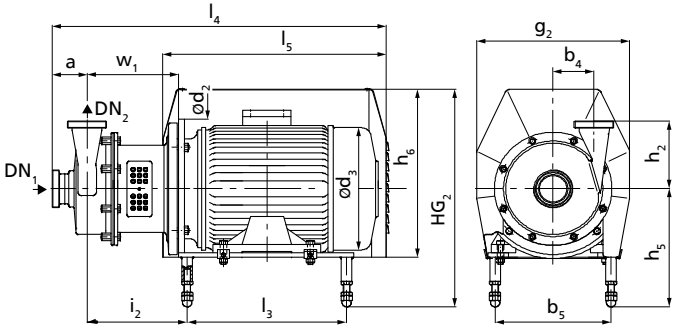

Pump set with ball feet and motor shroud

Table 29: Overview of mating dimensions DN 125, pump set with ball feet and motor shroud, dimensions in [mm]

Size	DN_1	DN_2	a	b_4	b_5	d_2	$\approx d_3$	g_2	h_1	h_2[40]	h_2[41]	h_5 min	h_5 max	h_6	$\approx HG_1$ max	$\approx HG_2$ max	i_2	$\approx l_1$[40]	l_1[41]	l_3	l_4	l_5	w_1
125-125-200 /752	125	125	120[40] (135)[41]	110	230	300	266	314	132	250	235	242	277	350	444	482	165,5	748	763	345	954	550	209
125-125-200 /1102	125	125		110	280	350	325	372	160	250	235	270	305	423	502	555	262,5	914	929	385	1042	720	242
125-125-200 /1502	125	125		110	280	350	325	372	160	250	235	270	305	423	502	555	262,5	914	929	385	1042	720	242
125-125-200 /1852	125	125		110	280	350	325	372	160	250	235	270	305	423	502	555	284,5	920	935	385	1042	720	242
125-125-200 /2202	125	125		110	305	350	370	402	180	250	235	290	325	493	587	626	310	978	993	385	1126	740	242
125-125-200 /3002	125	125		110	345	400	422	452	200	250	235	331	353	545	658	686	320	1037	1052	415	1193	830	242
125-125-200 /3702	125	125		110	345	400	422	452	200	250	235	331	353	545	658	686	320	1037	1052	415	1193	830	242
125-125-200 /4502	125	125		110	390	450	468	527	225	250	235	356	378	616	703	744	319	1123	1138	455	1330	950	242
125-125-200 /5502	125	125		110	440	550	520	602	250	250	235	381	403	716	795	844	371	1219	1234	495	1471	1055	276
125-125-200 /7502	125	125		110	490	550	575	672	280	250	235	411	433	786	865	914	393	1327	1342	565	1669	1250	276
125-125-200 /9002	125	125		110	490	550	575	672	280	250	235	411	433	786	865	914	393	1382	1397	565	1669	1250	276

40 Applicable to connections as per DIN 11851 (hygienic pipe union)
41 Applicable to flanged connections to EN 1092-1

Vitachrom DN 125, n ≈ 2900 rpm, pump set with levelling feet and motor shroud

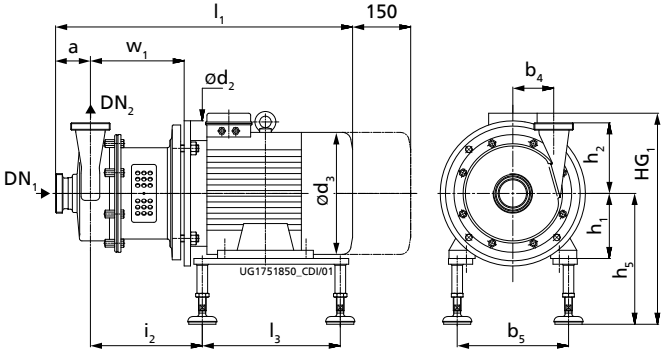

Pump set with levelling feet

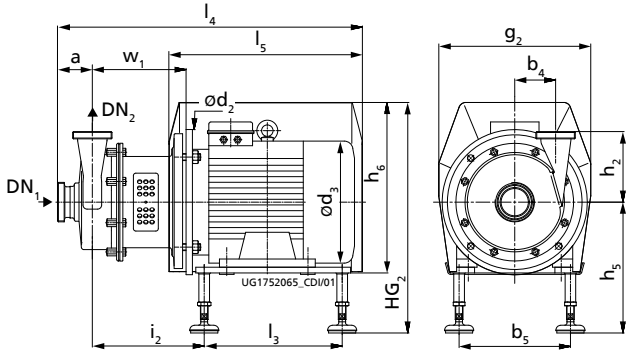

Pump set with levelling feet and motor shroud

Table 30: Overview of mating dimensions DN 125, pump set with levelling feet and motor shroud, dimensions in [mm]

Vitachrom	DN_1	DN_2	a	b_4	b_5	d_2	$≈d_3$	g_2	h_1	h_2 [42]	h_2 [43]	h_5 min	h_5 max	h_6	$≈HG_1$ max	$≈HG_2$ max	i_2	$≈l_1$ [42]	l_1 [43]	l_3	l_4	l_5	w_1
125-125-200 /752	125	125	120[42] (135)[43]	110	230	300	266	314	132	250	235	275[44]	285	350	452	491	165,5	748	763	345	954	550	209
125-125-200 /1102	125	125		110	280	350	325	372	160	250	235	291	313	423	510	564	262,5	914	929	385	1042	720	242
125-125-200 /1502	125	125		110	280	350	325	372	160	250	235	291	313	423	510	564	262,5	914	929	385	1042	720	242
125-125-200 /1852	125	125		110	280	350	325	372	160	250	235	291	313	423	510	564	284,5	920	935	385	1042	720	242
125-125-200 /2202	125	125		110	305	350	370	402	180	250	235	311	333	493	595	634	310	978	993	385	1126	740	242
125-125-200 /3002	125	125		110	345	400	422	452	200	250	235	360	382	545	687	702	320	1037	1052	415	1193	830	242
125-125-200 /3702	125	125		110	345	400	422	452	200	250	235	360	382	545	687	702	320	1037	1052	415	1193	830	242
125-125-200 /4502	125	125		110	390	450	468	527	225	250	235	385	407	616	732	773	319	1123	1138	455	1330	950	242
125-125-200 /5502	125	125		110	440	550	520	602	250	250	235	410	432	716	724	873	371	1219	1234	495	1471	1055	276
125-125-200 /7502	125	125		110	490	550	575	672	280	250	235	440	462	786	894	943	393	1327	1342	565	1669	1250	276
125-125-200 /9002	125	125		110	490	550	575	672	280	250	235	440	462	786	894	943	393	1382	1397	565	1669	1250	276

42 Applicable to connections as per DIN 11851 (hygienic pipe union)
43 Applicable to flanged connections to EN 1092-1
44 Extended foot

Vitachrom DN 50, n ≈ 1450 rpm / 1750 rpm

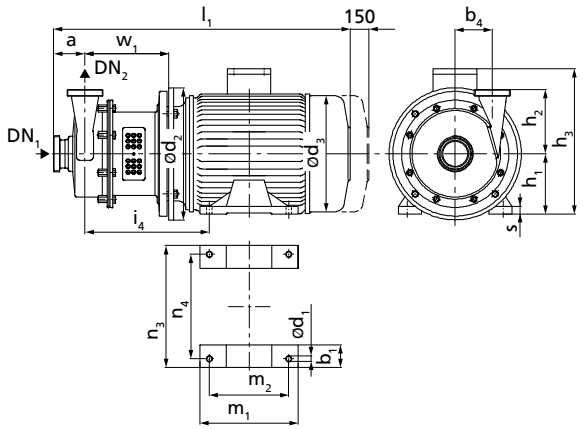

Pump set with motor feet

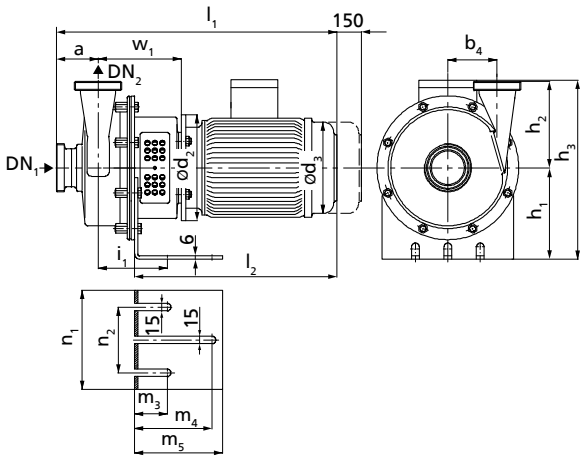

Pump set with angle foot

Table 31: Overview of mating dimensions DN 50, pump set with motor feet or angle foot, dimensions in [mm]

Size	DN_1	DN_2	a	$≈b_1$	b_4	d_1	d_2	$≈d_3$	h_1	h_2[45]	h_2[46]	$≈h_3$	i_1	i_4	$≈l_1$[45]	$≈l_1$[46]	$≈l_2$	m_1	m_2	m_3	m_4	m_5	n_1	n_2	n_3	n_4	w_1	s
050-050-125 /154	50	50	70	-	70	10	200	190	160	145	160	288	138,5	220	542	542	397	165	140	65	155	176	225	130	143	125	164	10
050-050-160 /154	50	50	70	-	85	10	200	190	160	170	185	288	138,5	220	542	542	397	165	140	65	155	176	236	130	143	125	164	10
050-050-160 /224	50	50	70	-	85	12	250	213	160	170	185	295	138,5	237	591	591	446	196	160	65	155	176	236	130	176	140	174	12
050-050-200 /154	50	50	70	-	100	10	200	190	160	170	185	288	138,5	220	542	542	397	165	140	65	155	176	264	130	143	125	164	10
050-050-200 /224	50	50	70	-	100	12	250	213	160	170	185	295	138,5	237	591	591	446	196	160	65	155	176	264	130	176	140	174	12
050-050-200 /304	50	50	70	-	100	12	250	213	160	170	185	295	138,5	237	626	626	481	196	160	65	155	176	264	130	176	140	174	12
050-050-250 /154	50	50	95[45] (90)[46]	-	125	10	200	190	180	185	195	308	121,5	215,5	569	564	399	165	140	30	120	160	225	130	143	125	159,5	10
050-050-250 /224	50	50		-	125	12	250	213	180	185	195	315	121,5	236,5	622	617	452	196	160	30	120	160	225	130	176	140	173,5	12
050-050-250 /304	50	50		-	125	12	250	213	180	185	195	315	121,5	236,5	657	652	487	196	160	30	120	160	225	130	176	140	173,5	12
050-050-250 /404	50	50		-	125	12	250	234	180	185	195	328	121,5	243,5	646	641	476	226	190	30	120	160	225	130	176	140	173,5	12
050-050-250 /554	50	50		55	125	12	300	266	132	185	195	299	-	285,5	711	706	-	220	140	-	-	-	-	-	270	216	196,5	15
050-050-250 /754	50	50		59	125	12	300	298	132	185	195	299	-	285,5	739	734	-	240	178	-	-	-	-	-	270	216	196,5	15
050-050-250 /1104	50	50		70	125	15	350	325	160	185	195	357	-	337,5	877	872	-	300	210	-	-	-	-	-	320	254	229,5	21
050-050-250 /1504	50	70		70	125	15	350	325	160	185	195	357	-	337,5	883	878	-	314	254	-	-	-	-	-	320	254	229,5	21

45 Applicable to connections as per DIN 11851 (hygienic pipe union)
46 Applicable to flanged connections to EN 1092-1

Vitachrom DN 50, n ≈ 1450 rpm / 1750 rpm, pump set with ball feet and motor shroud

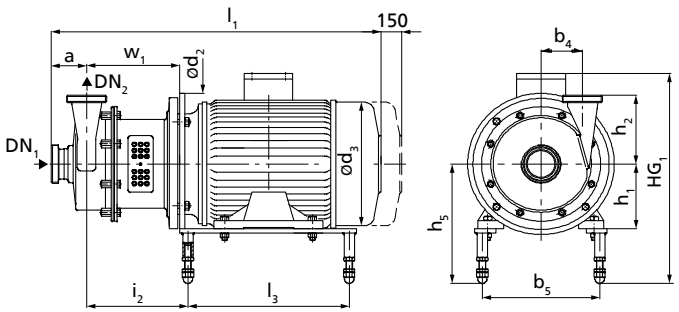

Pump set with ball feet

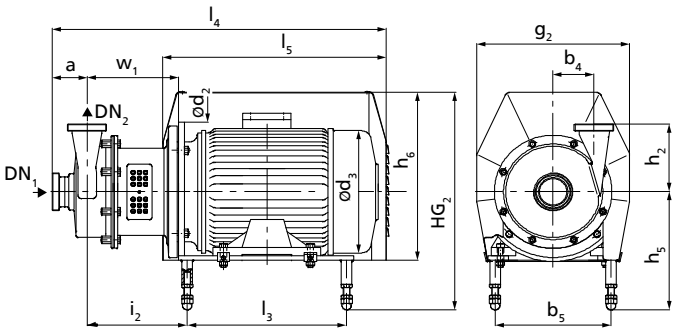

Pump set with ball feet and motor shroud

Table 32: Overview of mating dimensions DN 50, pump set with ball feet and motor shroud, dimensions in [mm]

Size	DN_1	DN_2	a	b_4	b_5	d_2	d_3	g_2	h_1	h_2[47]	h_2[48]	h_5 min	h_5 max	h_6	≈HG_1 max	≈HG_2 max	i_2	l_1[47]	l_1[48]	l_3	l_4	l_5	w_1
050-050-125 /154	50	50	70	70	200	200	190	264	90	145	160	213	247,5	304,7	376	437	150	542	542	225	646,5	450	164
050-050-160 /154	50	50	70	85	200	200	190	264	90	170	185	213	247,5	304,7	376	437	150	542	542	225	646,5	450	164
050-050-160 /224	50	50	70	85	200	250	213	264	100	170	185	223	257,5	304,7	393	437	174,5	591	591	265	686,5	470	174
050-050-200 /154	50	50	70	100	200	200	190	264	90	170	185	213	247,5	304,7	376	437	150	542	542	225	646,5	450	164
050-050-200 /224	50	50	70	100	200	250	213	264	100	170	185	223	257,5	304,7	393	437	174,5	591	591	265	686,5	470	174
050-050-200 /304	50	50	70	100	200	250	213	264	100	170	185	223	257,5	304,7	393	437	174,5	626	626	265	686,5	470	174
050-050-250 /154	50	50	95[47] (90)[48]	125	200	200	190	264	90	185	195	213	247,5	304,7	376	437	105,5	568,5	563,5	285	722	450	159,5
050-050-250 /224	50	50		125	200	250	213	264	100	185	195	223	257,5	304,7	393	437	129	621,5	616,5	310	751	470	173,5
050-050-250 /304	50	50		125	200	250	213	264	100	185	195	223	257,5	304,7	393	437	129	656,5	651,5	310	751	470	173,5
050-050-250 /404	50	50		125	200	250	234	264	112	185	195	222	256,5	304,7	405	437	116	645,5	640,5	330	757	470	173,5
050-050-250 /554	50	50		125	230	300	266	314	132	185	195	242	276,5	349,7	444	482	153	710,5	705,5	345	814	550	196,5
050-050-250 /754	50	50		125	230	300	298	314	132	185	195	242	276,5	349,7	444	482	172	738,5	733,5	345	814	550	196,5
050-050-250 /1104	50	50		125	280	350	325	372	160	185	195	270	304,5	422,7	502	555	250	876,5	871,5	385	986	720	229,5
050-050-250 /1504	50	50		125	280	350	325	372	160	185	195	270	304,5	422,7	502	555	272	882,5	877,5	385	986	720	229,5

47 Applicable to connections as per DIN 11851 (hygienic pipe union)
48 Applicable to flanged connections as per EN 1092-1

Vitachrom DN 50, n ≈ 1450 rpm / 1750 rpm, pump set with levelling feet and motor shroud

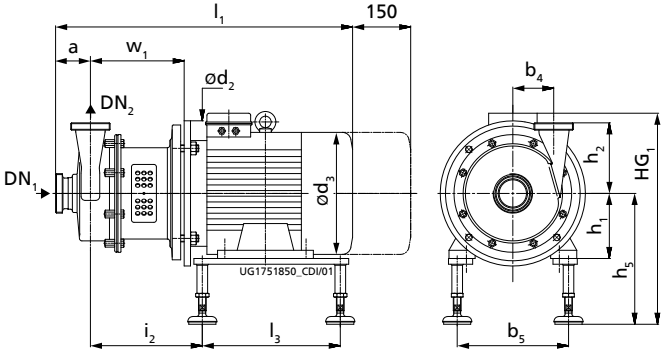

Pump set with levelling feet

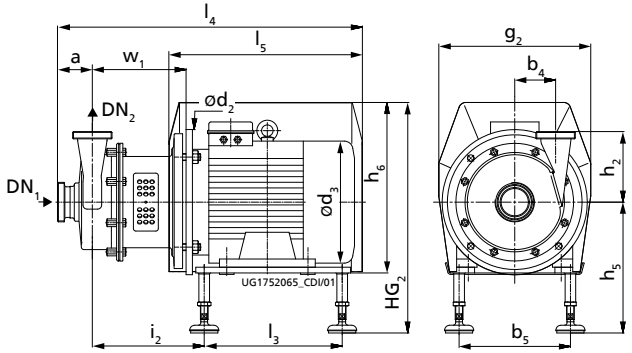

Pump set with levelling feet and motor shroud

Table 33: Overview of mating dimensions DN 50, pump set with levelling feet and motor shroud, dimensions in [mm]

Vitachrom	DN_1	DN_2	a	b_4	b_5	d_2	d_3	g_2	h_1	h_2 [49]	h_2 [50]	h_5 min	h_5 max	h_6	≈HG_1 max	≈HG_2 max	i_2	l_1 [49]	l_1 [50]	l_3	l_4	l_5	w_1
050-050-125 /154	50	50	70	70	200	200	190	264	90	145	160	234	256	305	384	446	170	542	542	225	646,5	450	164
050-050-125 /224	50	50	70	70	200	250	213	264	100	145	160	244	266	305	401	446	174,5	591	591	265	686,5	470	174
050-050-125 /304	50	50	70	70	200	250	213	264	100	145	160	244	266	305	401	446	174,5	591	591	265	686,5	470	174
050-050-160 /154	50	50	70	85	200	200	190	264	90	170	185	234	256	305	384	446	170	542	542	225	646,5	450	164
050-050-160 /224	50	50	70	85	200	250	213	264	100	170	185	244	266	305	401	446	174,5	591	591	265	686,5	470	174
050-050-160 /304	50	50	70	85	200	250	213	264	100	170	185	244	266	305	401	446	174,5	591	591	265	686,5	470	174
050-050-160 /404	50	50	70	85	200	250	234	264	100	170	185	243	265	305	413	445	181,5	621	621	265	682,5	470	174
050-050-200 /154	50	50	70	100	200	200	190	264	90	170	185	234	256	305	384	446	170	542	542	225	646,5	450	164
050-050-200 /224	50	50	70	100	200	250	213	264	100	170	185	244	266	305	401	446	174,5	591	591	265	686,5	470	174
050-050-200 /304	50	50	70	100	200	250	213	264	100	170	185	244	266	305	401	446	174,5	626	626	265	686,5	470	174
050-050-200 /404	50	50	70	100	200	250	234	264	112	170	185	243	265	305	413	446	181,5	621	621	265	682,5	470	174
050-050-200 /554	50	50	70	100	230	300	266	314	132	170	185	263	285	350	452	491	210,5	683	683	285	782,5	550	194
050-050-250 /154	50	50	95[49] (90)[50]	125	200	200	190	264	90	185	195	246[51]	256	305	384	446	105,5	568,5	563,5	285	722	450	159,5
050-050-250 /224	50	50		125	200	250	213	264	100	185	195	256[51]	266	305	401	446	129	621,5	616,5	310	751	470	173,5
050-050-250 /304	50	50		125	200	250	213	264	100	185	195	256[51]	266	305	401	446	129	656,5	651,5	310	751	470	173,5
050-050-250 /404	50	50		125	200	250	234	264	112	185	195	255[51]	265	305	413	446	116	645,5	640,5	330	757	470	173,5
050-050-250 /554	50	50		125	230	300	266	314	132	185	195	275[51]	285	350	452	491	153	710,5	705,5	345	814	550	196,5
050-050-250 /754	50	50		125	230	300	298	314	132	185	195	275[51]	285	350	452	491	172	738,5	733,5	345	814	550	196,5

49 Applicable to connections as per DIN 11851 (hygienic pipe union)
50 Applicable to flanged connections as per EN 1092-1
51 Extended foot

Vitachrom	DN_1	DN_2	a	b_4	b_5	d_2	d_3	g_2	h_1	h_2 [49]	h_2 [50]	h_5 min	h_5 max	h_6	$\approx HG_1$ max	$\approx HG_2$ max	i_2	l_1 [49]	l_1 [50]	l_3	l_4	l_5	w_1
050-050-250 /1104	50	50	95 [49] (90) [50]	125	280	350	325	372	160	185	195	291	313	423	510	564	250	876,5	871,5	385	986	720	229,5
050-050-250 /1504	50	50		125	280	350	325	372	160	185	195	291	313	423	510	564	272	882,5	877,5	385	986	720	229,5

Vitachrom DN 65, n ≈ 1450 rpm / 1750 rpm

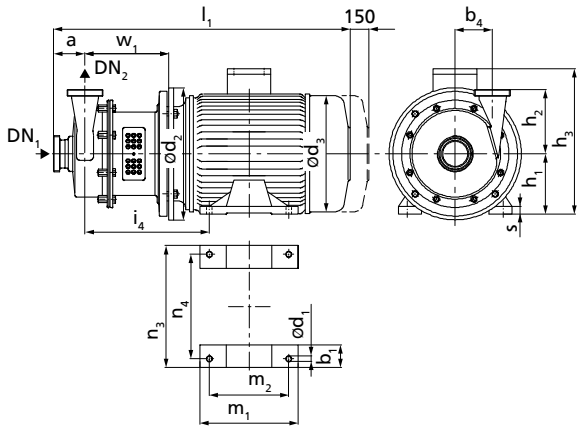

Pump set with motor feet

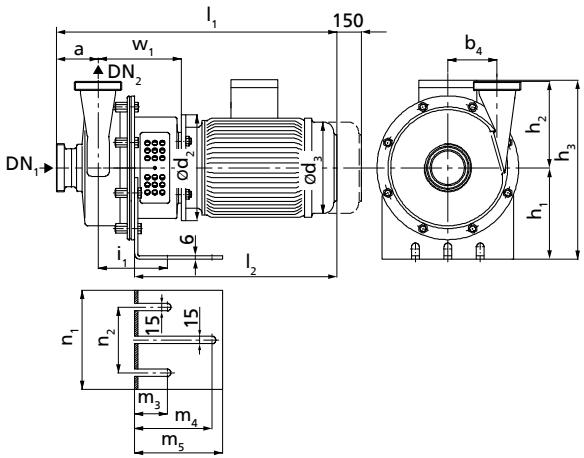

Pump set with angle foot

Table 34: Overview of mating dimensions DN 65, pump set with motor feet or angle foot, dimensions in [mm]

Size	DN_1	DN_2	a	$≈b_1$	b_4	d_1	d_2	$≈d_3$	h_1	h_2 [52]	h_2 [53]	$≈h_3$	i_1	i_4	$≈l_1$ [52]	$≈l_1$ [53]	$≈l_2$	m_1	m_2	m_3	m_4	m_5	n_1	n_2	n_3	n_4	w_1	s
065-065-125 /154	65	65	85	-	70	10	200	190	160	145	160	288	135,5	217	554	554	397	165	140	65	155	176	225	130	143	125	161	10
065-065-125 /224	65	65	85	-	70	12	250	213	160	145	160	295	135,5	234	603	603	446	196	160	65	155	176	225	130	176	140	171	12
065-065-160 /154	65	65	85	-	85	10	200	190	160	170	185	288	135,5	217	554	554	397	165	140	65	155	176	236	130	143	125	161	10
065-065-160 /224	65	65	85	-	85	12	250	213	160	170	185	295	135,5	234	603	603	446	196	160	65	155	176	236	130	176	140	171	12
065-065-160 /304	65	65	85	-	85	12	250	213	160	170	185	295	135,5	234	638	638	481	196	160	65	155	176	236	130	176	140	171	12
065-065-200 /154	65	65	85	-	100	10	200	190	160	170	185	288	135,5	217	554	554	397	165	140	65	155	176	264	130	143	125	161	10
065-065-200 /224	65	65	85	-	100	12	250	213	160	170	185	295	135,5	234	603	603	446	196	160	65	155	176	264	130	176	140	171	12
065-065-200 /304	65	65	85	-	100	12	250	213	160	170	185	295	135,5	234	638	638	481	196	160	65	155	176	264	130	176	140	171	12
065-065-200 /404	65	65	85	-	100	12	250	234	160	170	185	308	135,5	241	627	627	470	226	190	65	155	176	264	130	176	140	171	12
065-065-250 /154	65	65	90 [53] (105) [52]	-	130	10	200	190	180	220	205	308	118	212	575	560	399	165	140	30	120	160	225	130	143	125	156	10
065-065-250 /224	65	65		-	130	12	250	213	180	220	205	315	118	233	628	613	452	196	160	30	120	160	225	130	176	140	170	12
065-065-250 /304	65	65		-	130	12	250	213	180	220	205	315	118	233	663	648	487	196	160	30	120	160	225	130	176	140	170	12
065-065-250 /404	65	65		-	130	12	250	234	180	220	205	328	118	240	652	637	476	226	190	30	120	160	225	130	176	140	170	12
065-065-250 /554	65	65		55	130	12	300	266	132	220	205	299	-	282	717	702	-	220	140	-	-	-	-	-	270	216	193	15
065-065-250 /754	65	65		59	130	12	300	298	132	220	205	299	-	282	745	730	-	240	178	-	-	-	-	-	270	216	193	15
065-065-250 /1104	65	65		70	130	15	350	325	160	220	205	357	-	334	883	868	-	300	210	-	-	-	-	-	320	254	226	21
065-065-250 /1504	65	65		70	130	15	350	325	160	220	205	357	-	334	889	874	-	314	254	-	-	-	-	-	320	254	226	21

52 Applicable to connections as per DIN 11851 (hygienic pipe union)
53 Applicable to flanged connections as per EN 1092-1

Vitachrom DN 65, n ≈ 1450 rpm / 1750 rpm, pump set with ball feet and motor shroud

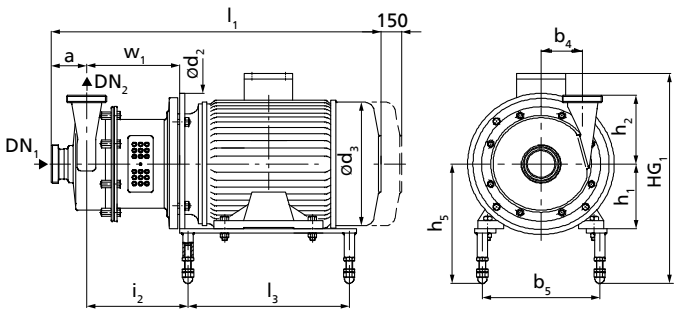

Pump set with ball feet

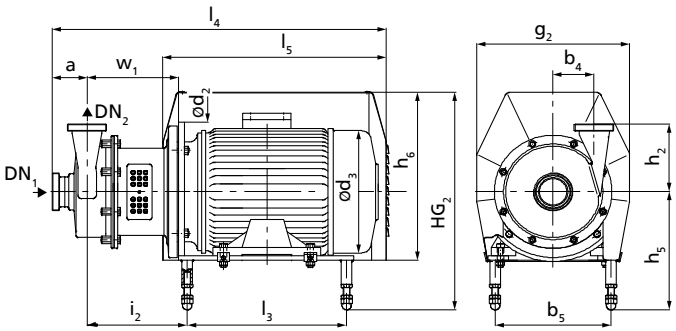

Pump set with ball feet and motor shroud

Table 35: Overview of mating dimensions DN 65, pump set with ball feet and motor shroud, dimensions in [mm]

Size	DN_1	DN_2	a	b_4	b_5	d_2	d_3	g_2	h_1	h_2[54]	h_2[55]	h_5 min	h_5 max	h_6	≈HG_1 max	≈HG_2 max	i_2	l_1[54]	l_1[55]	l_3	l_4	l_5	w_1
065-065-125 /154	65	65	85	70	200	200	190	264	90	145	160	213	247,5	304,7	376	437	147	554	554	225	658,5	450	161
065-065-125 /224	65	65	85	70	200	250	213	264	100	145	160	223	257,5	304,7	393	437	171,5	603	603	265	698,5	470	171
065-065-160 /154	65	65	85	85	200	200	190	264	90	170	185	213	247,5	304,7	376	437	147	554	554	225	658,5	450	161
065-065-160 /224	65	65	85	85	200	250	213	264	100	170	185	223	257,5	304,7	393	437	171,5	603	603	265	698,5	470	171
065-065-160 /304	65	65	85	85	200	250	213	264	100	170	185	223	257,5	304,7	393	437	171,5	638	638	265	698,5	470	171
065-065-200 /154	65	65	85	100	200	200	190	264	90	170	185	213	247,5	304,7	376	437	147	554	554	225	658,5	450	161
065-065-200 /224	65	65	85	100	200	250	213	264	100	170	185	223	257,5	304,7	393	437	171,5	603	603	265	698,5	470	171
065-065-200 /304	65	65	85	100	200	250	213	264	100	170	185	223	257,5	304,7	393	437	171,5	638	638	265	698,5	470	171
065-065-200 /404	65	65	85	100	200	250	234	264	112	170	185	222	256,5	304,7	405	437	178,5	627	627	265	694,5	470	171
065-065-250 /154	65	65	90[55] (105)[54]	130	200	200	190	264	90	220	205	213	247,5	304,7	376	437	102	575	560	285	733	450	156
065-065-250 /224	65	65		130	200	250	213	264	100	220	205	223	257,5	304,7	393	437	125,5	628	613	310	762	470	170
065-065-250 /304	65	65		130	200	250	213	264	100	220	205	223	257,5	304,7	393	437	125,5	663	648	310	762	470	170
065-065-250 /404	65	65		130	200	250	234	264	112	220	205	222	256,5	304,7	405	437	112,5	652	637	330	778	470	170
065-065-250 /554	65	65		130	230	300	266	314	132	220	205	242	276,5	349,7	444	482	149,5	717	702	345	876	550	193
065-065-250 /754	65	65		130	230	300	298	314	132	220	205	242	276,5	349,7	444	482	168,5	745	730	345	876	550	193
065-065-250 /1104	65	65		130	280	350	325	372	160	220	205	270	304,5	422,7	502	555	246,5	883	868	385	997	720	226
065-065-250 /1504	65	65		130	280	350	325	372	160	220	205	270	304,5	422,7	502	555	268,5	889	874	385	997	720	226

54 Applicable to connections as per DIN 11851 (hygienic pipe union)
55 Applicable to flanged connections to EN 1092-1

Vitachrom DN 65, n ≈ 1450 rpm / 1750 rpm, pump set with levelling feet and motor shroud

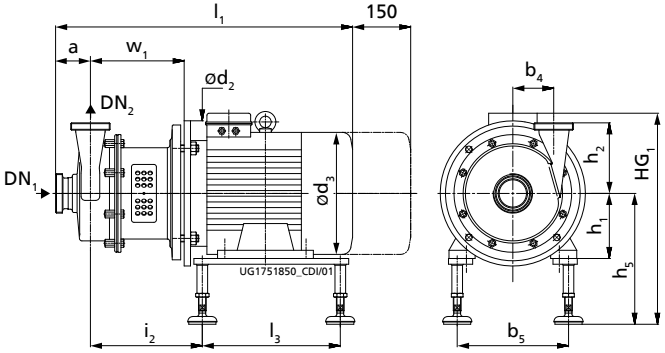

Pump set with levelling feet

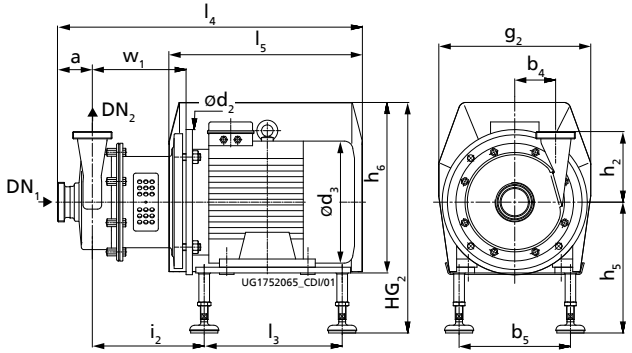

Pump set with levelling feet and motor shroud

Table 36: Overview of mating dimensions DN 65, pump set with levelling feet and motor shroud, dimensions in [mm]

Vitachrom	DN_1	DN_2	a	b_4	b_5	d_2	d_3	g_2	h_1	h_2[56]	h_2[57]	h_5 min	h_5 max	h_6	≈HG_1 max	≈HG_2 max	i_2	l_1[56]	l_1[57]	l_3	l_4	l_5	w_1
065-065-125 /154	65	65	85	70	200	200	190	264	90	145	160	234	256	305	384	446	147	554	554	225	658,5	450	161
065-065-125 /224	65	65	85	70	200	250	213	264	100	145	160	244	266	305	401	446	171,5	603	603	265	698,5	470	171
065-065-125 /304	65	65	85	70	200	250	213	264	100	145	160	244	266	305	401	446	171,5	603	603	265	698,5	470	171
065-065-125 /404	65	65	85	70	200	250	234	264	112	145	160	243	265	305	413	446	178,5	633	633	265	694,5	470	171
065-065-160 /154	65	65	85	85	200	200	190	264	90	170	185	234	256	305	384	446	147	554	554	225	658,5	450	161
065-065-160 /224	65	65	85	85	200	250	213	264	100	170	185	244	266	305	401	446	171,5	603	603	265	698,5	470	171
065-065-160 /304	65	65	85	85	200	250	213	264	100	170	185	244	266	305	401	446	171,5	638	638	265	698,5	470	171
065-065-160 /404	65	65	85	85	200	250	234	264	112	170	185	243	265	305	413	446	178,5	633	633	265	694,5	470	171
065-065-160 /554	65	65	85	85	230	300	266	314	132	170	185	263	285	350	452	491	207,5	695	695	285	794,5	550	191
065-065-200 /154	65	65	85	100	200	200	190	264	90	170	185	234	256	305	384	446	147	554	554	225	658,5	450	161
065-065-200 /224	65	65	85	100	200	250	213	264	100	170	185	244	266	305	401	446	171,5	603	603	265	698,5	470	171
065-065-200 /304	65	65	85	100	200	250	213	264	100	170	185	244	266	305	401	446	171,5	638	638	265	698,5	470	171
065-065-200 /404	65	65	85	100	200	250	234	264	112	170	185	243	265	305	413	446	178,5	627	627	265	694,5	470	171
065-065-200 /554	65	65	85	100	230	300	266	314	132	170	185	263	285	350	452	491	207,5	695	695	285	794,5	550	191
065-065-250 /154	65	65	90[57] (105)[56]	130	200	200	190	264	90	220	205	246[58]	256	305	384	446	102	575	560	285	733	450	156
065-065-250 /224	65	65		130	200	250	213	264	100	220	205	256[58]	266	305	401	446	125,5	628	613	310	762	470	170
065-065-250 /304	65	65		130	200	250	213	264	100	220	205	256[58]	266	305	401	446	125,5	663	648	310	762	470	170
065-065-250 /404	65	65		130	200	250	234	264	112	220	205	255[58]	265	305	413	446	112,5	652	637	330	778	470	170

56 Applicable to connections as per DIN 11851 (hygienic pipe union)
57 Applicable to flanged connections to EN 1092-1
58 Extended foot

Vitachrom	DN_1	DN_2	a	b_4	b_5	d_2	d_3	g_2	h_1	h_2[56]	h_2[57]	h_5 min	h_5 max	h_6	$\approx HG_1$ max	$\approx HG_2$ max	i_2	l_1[56]	l_1[57]	l_3	l_4	l_5	w_1
065-065-250 /554	65	65	90[57] (105)[56]	130	230	300	266	314	132	220	205	275[58]	285	350	452	491	149,5	717	702	345	876	550	193
065-065-250 /754	65	65		130	230	300	298	314	132	220	205	275[58]	285	350	452	491	168,5	745	730	345	876	550	193
065-065-250 /1104	65	65		130	280	350	325	372	160	220	205	291	313	423	510	564	246,5	883	868	385	997	720	226
065-065-250 /1504	65	65		130	280	350	325	372	160	220	205	291	313	423	510	564	268,5	889	874	385	997	720	226

Vitachrom DN 80, n ≈ 1450 rpm / 1750 rpm

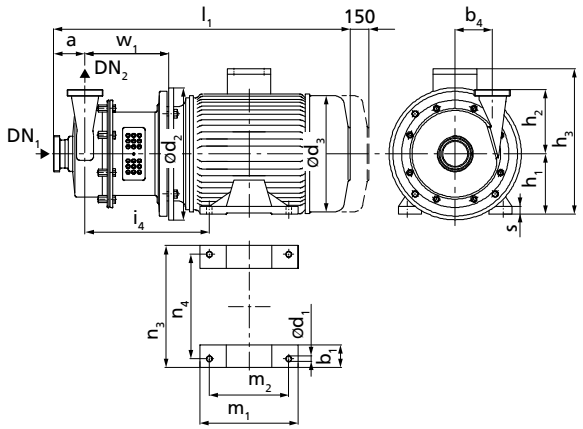

Pump set with motor feet

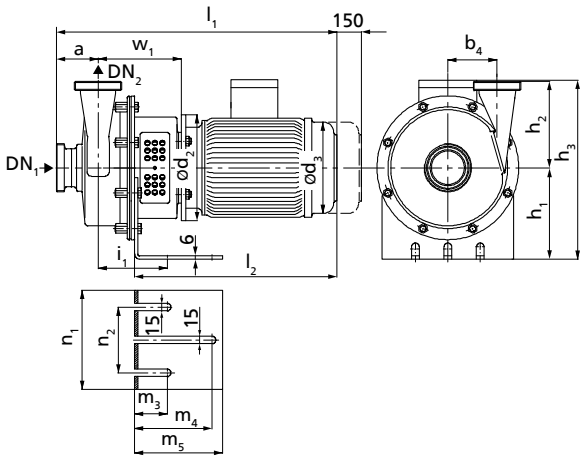

Pump set with angle foot

Table 37: Overview of mating dimensions DN 80, pump set with motor feet or angle foot, dimensions in [mm]

Size	DN_1	DN_2	a	$\approx b_1$	b_4	d_1	d_2	$\approx d_3$	h_1	h_2 59)	h_2 60)	$\approx h_3$	i_1	i_4	$\approx l_1$ 59)	$\approx l_1$ 60)	$\approx l_2$	m_1	m_2	m_3	m_4	m_5	n_1	n_2	n_3	n_4	w_1	s
080-080-125 /154	80	80	100	-	85	10	200	190	160	170	185	288	143	224,5	577	577	397	165	140	65	155	176	236	130	143	125	168,5	10
080-080-125 /224	80	80	100	-	85	12	250	213	160	170	185	295	143	241,5	626	626	446	196	160	65	155	176	236	130	176	140	178,5	12
080-080-125 /304	80	80	100	-	85	12	250	213	160	170	185	295	143	241,5	661	661	481	196	160	65	155	176	236	130	176	140	178,5	12
080-080-160 /154	80	80	100	-	85	10	200	190	160	170	185	288	143	224,5	577	577	397	165	140	65	155	176	236	130	143	125	168,5	10
080-080-160 /224	80	80	100	-	85	12	250	213	160	170	185	295	143	241,5	626	626	446	196	160	65	155	176	236	130	176	140	178,5	12
080-080-160 /304	80	80	100	-	85	12	250	213	160	170	185	295	143	241,5	661	661	481	196	160	65	155	176	236	130	176	140	178,5	12
080-080-160 /404	80	80	100	-	85	12	250	234	160	170	185	308	143	248,5	650	650	470	226	190	65	155	176	236	130	176	140	178,5	12
080-080-160 /554	80	80	100	55	85	12	300	266	132	170	185	299	-	287,5	712	712	-	220	140	-	-	-	-	-	270	216	198,5	15
080-080-250 /154	80	80	95 60) (115) 59)	-	125	10	200	190	180	225	205	308	115,5	209,5	583	563	399	165	140	30	120	160	225	130	143	125	153,5	10
080-080-250 /224	80	80		-	125	12	250	213	180	225	205	315	115,5	230,5	636	616	452	196	160	30	120	160	225	130	176	140	167,5	12
080-080-250 /304	80	80		-	125	12	250	213	180	225	205	315	115,5	230,5	671	651	487	196	160	30	120	160	225	130	176	140	167,5	12
080-080-250 /404	80	80		-	125	12	250	234	180	225	205	328	115,5	237,5	660	640	476	226	190	30	120	160	225	130	176	140	167,5	12
080-080-250 /554	80	80		55	125	12	300	266	132	225	205	299	-	279,5	725	705	-	220	140	-	-	-	-	-	270	216	190,5	15
080-080-250 /754	80	80		59	125	12	300	298	132	225	205	299	-	279,5	753	733	-	240	178	-	-	-	-	-	270	216	190,5	15
080-080-250 /1104	80	80		70	125	15	350	325	160	225	205	357	-	331,5	891	871	-	300	210	-	-	-	-	-	320	254	223,5	21
080-080-250 /1504	80	80		70	125	15	350	325	160	225	205	357	-	331,5	897	877	-	314	254	-	-	-	-	-	320	254	223,5	21

59 Applicable to connections as per DIN 11851 (hygienic pipe union)
60 Applicable to flanged connections to EN 1092-1

Vitachrom DN 80, n ≈ 1450 rpm / 1750 rpm, pump set with ball feet and motor shroud

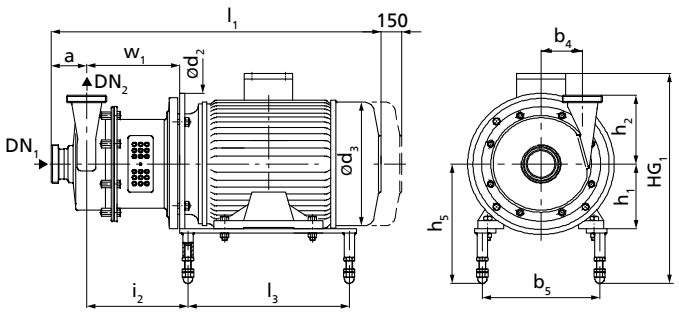

Pump set with ball feet

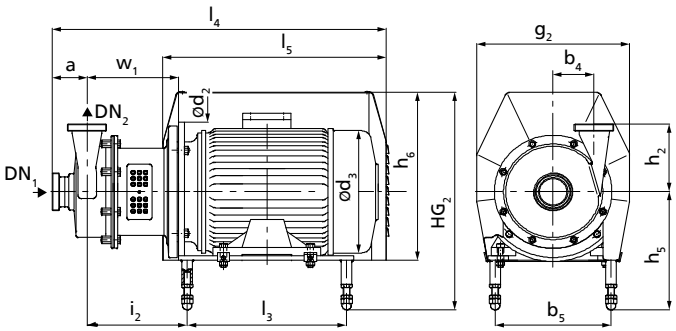

Pump set with ball feet and motor shroud

Table 38: Mating dimensions DN 80, pump set with ball feet and motor shroud, dimensions in [mm]

Size	DN_1	DN_2	a	b_4	b_5	d_2	d_3	g_2	h_1	h_2[61]	h_2[62]	h_5 min	h_5 max	h_6	≈HG_1 max	≈HG_2 max	i_2	l_1[61]	l_1[62]	l_3	l_4	l_5	w_1
080-080-125 /154	80	80	100	85	200	200	190	264	90	170	185	213	248	305	376	437	154,5	577	577	225	681	450	168,5
080-080-125 /224	80	80	100	85	200	250	213	264	100	170	185	223	258	305	393	437	179	626	626	265	721	470	178,5
080-080-125 /304	80	80	100	85	200	250	213	264	100	170	185	223	258	305	393	437	179	661	661	265	721	470	178,5
080-080-160 /154	80	80	100	85	200	200	190	264	90	170	185	213	248	305	376	437	154,5	577	577	225	681	450	168,5
080-080-160 /224	80	80	100	85	200	250	213	264	100	170	185	223	258	305	393	437	179	626	626	265	721	470	178,5
080-080-160 /304	80	80	100	85	200	250	213	264	100	170	185	223	258	305	393	437	179	661	661	265	721	470	178,5
080-080-160 /404	80	80	100	85	200	250	234	264	112	170	185	222	257	305	405	437	186	650	650	265	628	470	178,5
080-080-160 /554	80	80	100	85	230	300	266	314	132	170	185	242	277	350	444	482	215	712	712	285	784	550	198,5
080-080-250 /154	80	80	95[62] (115)[61]	125	200	200	190	264	90	225	205	213	248	305	376	437	99,5	583	562,5	285	628	450	153,5
080-080-250 /224	80	80		125	200	250	213	264	100	225	205	223	258	305	393	437	123	636	615,5	310	681	470	167,5
080-080-250 /304	80	80		125	200	250	213	264	100	225	205	223	258	305	393	437	123	671	650,5	310	681	470	167,5
080-080-250 /404	80	80		125	200	250	234	264	112	225	205	222	257	305	405	437	110	660	639,5	330	786	470	167,5
080-080-250 /554	80	80		125	230	300	266	314	132	225	205	242	277	350	444	482	147	725	704,5	345	884	550	190,5
080-080-250 /754	80	80		125	230	300	298	314	132	225	205	242	277	350	444	482	166	753	732,5	345	884	550	190,5
080-080-250 /1104	80	80		125	280	350	325	372	160	225	205	270	305	423	502	555	244	891	870,5	385	1005	720	223,5
080-080-250 /1504	80	80		125	280	350	325	372	160	225	205	270	305	423	502	555	266	897	876,5	385	1005	720	223,5

61 Applicable to connections as per DIN 11851 (hygienic pipe union)
62 Applicable to flanged connections to EN 1092-1

Vitachrom DN 80, n ≈ 1450 rpm / 1750 rpm, pump set with levelling feet and motor shroud

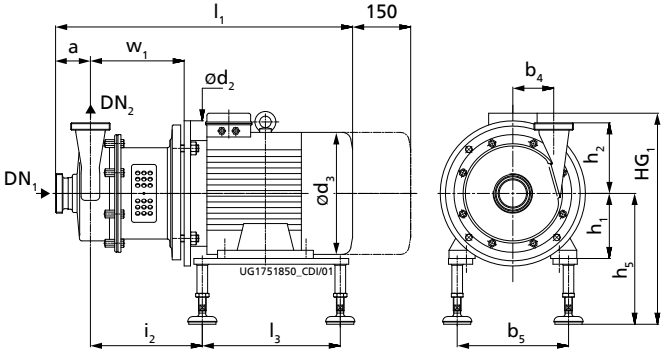

Pump set with levelling feet

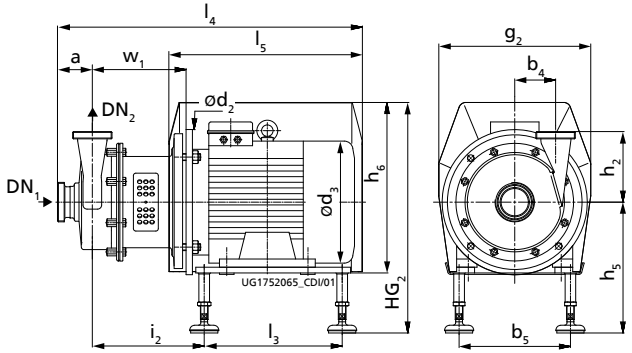

Pump set with levelling feet and motor shroud

Table 39: Mating dimensions DN 80, pump set with levelling feet and motor shroud, dimensions in [mm]

Vitachrom	DN_1	DN_2	a	b_4	b_5	d_2	d_3	g_2	h_1	h_2[63]	h_2[64]	h_5 min	h_5 max	h_6	≈HG_1 max	≈HG_2 max	i_2	l_1[63]	l_1[64]	l_3	l_4	l_5	w_1
080-080-125 /154	80	80	100	85	200	200	190	264	90	170	185	234	256	305	384	446	154,5	577	577	225	681	450	168,5
080-080-125 /224	80	80	100	85	200	250	213	264	100	170	185	244	266	305	401	446	179	626	626	265	721	470	178,5
080-080-125 /304	80	80	100	85	200	250	213	264	100	170	185	244	266	305	401	446	179	661	661	265	721	470	178,5
080-080-125 /404	80	80	100	85	200	250	234	264	112	170	185	243	265	305	413	446	186	656	656	265	717	470	178,5
080-080-125 /554	80	80	100	85	230	300	266	314	132	170	185	263	285	350	452	491	215	718	718	285	817	550	198,5
080-080-160 /154	80	80	100	85	200	200	190	264	90	170	185	234	256	305	384	446	154,5	577	577	225	681	450	168,5
080-080-160 /224	80	80	100	85	200	250	213	264	100	170	185	244	266	305	401	446	179	626	626	265	721	470	178,5
080-080-160 /304	80	80	100	85	200	250	213	264	100	170	185	244	266	305	401	446	179	661	661	265	721	470	178,5
080-080-160 /404	80	80	100	85	200	250	234	264	112	170	185	243	265	305	413	446	186	650	650	265	628	470	178,5
080-080-160 /554	80	80	100	85	230	300	266	314	132	170	185	263	285	350	452	491	215	712	712	285	784	550	198,5
080-080-160 /754	80	80	100	85	230	300	298	314	132	170	185	275[65]	285	350	452	491	234	746	746	345	817	550	198,5
080-080-160 /1104	80	80	100	85	280	350	325	372	160	170	185	291	313	423	510	564	249	881	881	385	995	720	228,5
080-080-250 /154	80	80	95[64] (115)[63]	125	200	200	190	264	90	225	205	246[65]	256	305	384	446	99,5	583	562,5	285	628	450	153,5
080-080-250 /224	80	80		125	200	250	213	264	100	225	205	256[65]	266	305	401	446	123	636	615,5	310	681	470	167,5
080-080-250 /304	80	80		125	200	250	213	264	100	225	205	256[65]	266	305	401	446	123	671	650,5	310	681	470	167,5
080-080-250 /404	80	80		125	200	250	234	264	112	225	205	255[65]	265	305	413	446	110	660	639,5	330	786	470	167,5
080-080-250 /554	80	80		125	230	300	266	314	132	225	205	275[65]	285	350	452	491	147	725	704,5	345	884	550	190,5
080-080-250 /754	80	80		125	230	300	298	314	132	225	205	275[65]	285	350	452	491	166	753	732,5	345	884	550	190,5

63 Applicable to connections as per DIN 11851 (hygienic pipe union)
64 Applicable to flanged connections to EN 1092-1
65 Extended foot

Vitachrom	DN_1	DN_2	a	b_4	b_5	d_2	d_3	g_2	h_1	h_2 63)	h_2 64)	h_5 min	h_5 max	h_6	≈HG_1 max	≈HG_2 max	i_2	l_1 63)	l_1 64)	l_3	l_4	l_5	w_1
080-080-250 /1104	80	80	95 64) (115) 63)	125	280	350	325	372	160	225	205	291	313	423	510	564	244	891	870,5	385	1005	720	223,5
080-080-250 /1504	80	80		125	280	350	325	372	160	225	205	291	313	423	510	564	266	897	876,5	385	1005	720	223,5

Vitachrom DN 100, n ≈ 1450 rpm / 1750 rpm

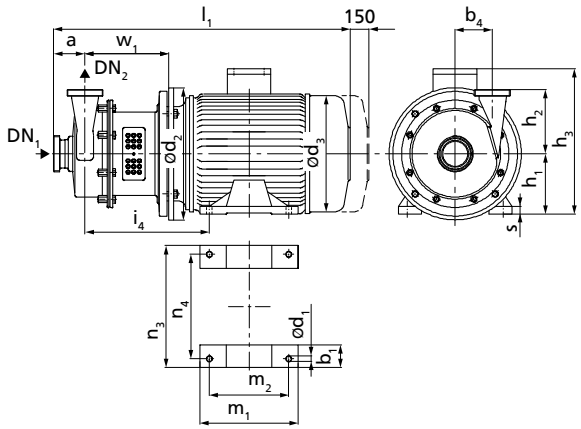

Pump set with motor feet

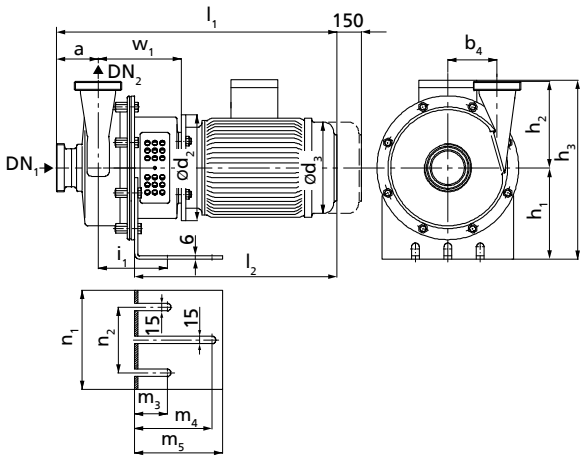

Pump set with angle foot

Table 40: Overview of mating dimensions DN 100, pump set with motor feet or angle foot, dimensions in [mm]

Size	DN_1	DN_2	a	$\approx b_1$	b_4	d_1	d_2	$\approx d_3$	h_1	h_2 [66]	h_2 [67]	$\approx h_3$	i_1	i_4	$\approx l_1$ [66]	$\approx l_1$ [67]	$\approx l_2$	m_1	m_2	m_3	m_4	m_5	n_1	n_2	n_3	n_4	w_1	s
100-100-200 /154	100	100	100[67] (115)[66]	-	110	10	200	190	180	250	235	308	113	207	565	580	399	165	140	30	120	160	225	130	143	125	151	10
100-100-200 /224	100	100		-	110	12	250	213	180	250	235	315	113	228	618	633	452	196	160	30	120	160	225	130	176	140	165	12
100-100-200 /304	100	100		-	110	12	250	213	180	250	235	315	113	228	653	668	487	196	160	30	120	160	225	130	176	140	165	12
100-100-200 /404	100	100		-	110	12	250	234	180	250	235	328	113	235	642	657	476	226	190	30	120	160	225	130	176	140	165	12
100-100-200 /554	100	100		55	110	12	300	266	132	250	235	299	-	277	707	722	-	220	140	-	-	-	-	-	270	216	188	15
100-100-200 /754	100	100		59	110	12	300	298	132	250	235	299	-	277	735	750	-	240	178	-	-	-	-	-	270	216	188	15
100-100-200 /1104	100	100		70	110	15	350	325	160	250	235	357	-	329	873	888	-	300	210	-	-	-	-	-	320	254	221	21
100-100-200 /1504	100	100		70	110	15	350	325	160	250	235	357	-	329	879	894	-	314	254	-	-	-	-	-	320	254	221	21

66 Applicable to connections as per DIN 11851 (hygienic pipe union)
67 Applicable to flanged connections to EN 1092-1

Vitachrom DN 100, n ≈ 1450 rpm / 1750 rpm, pump set with ball feet and motor shroud

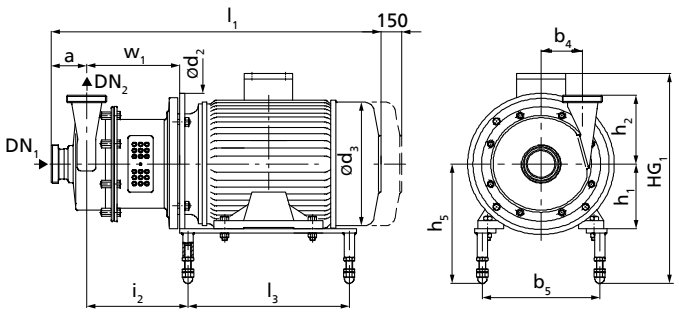

Pump set with ball feet

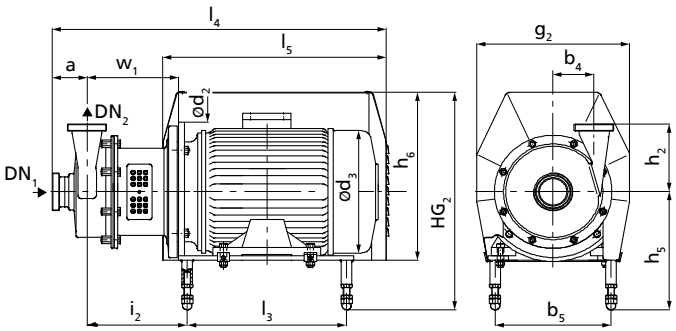

Pump set with ball feet and motor shroud

Table 41: Overview of mating dimensions DN 100, pump set with ball feet and motor shroud, dimensions in [mm]

Size	DN_1	DN_2	a	b_4	b_5	d_2	d_3	g_2	h_1	h_2[68]	h_2[69]	h_5 min	h_5 max	h_6	≈HG_1 max	≈HG_2 max	i_2	l_1[68]	l_1[69]	l_3	l_4	l_5	w_1
100-100-200 /154	100	100	100[68] (115)[69]	200	110	200	190	264	90	250	235	213	247,5	304,7	376	437	97	565	580	285	676	450	151
100-100-200 /224	100	100		200	110	250	213	264	100	250	235	223	257,5	304,7	393	437	120,5	618	633	310	720	470	165
100-100-200 /304	100	100		200	110	250	213	264	100	250	235	223	257,5	304,7	393	437	120,5	653	668	310	720	470	165
100-100-200 /404	100	100		200	110	250	234	264	112	250	235	222	256,5	304,7	405	437	107,5	642	657	330	716	470	165
100-100-200 /554	100	100		230	110	300	266	314	132	250	235	242	276,5	349,7	444	482	144,5	707	722	345	819	550	188
100-100-200 /754	100	100		230	110	300	298	314	132	250	235	242	276,5	349,7	444	482	163,5	735	750	345	819	550	188
100-100-200 /1104	100	100		280	110	350	325	372	160	250	235	270	304,5	422,7	502	555	241,5	873	888	385	1000	720	221
100-100-200 /1504	100	100		280	110	350	325	372	160	250	235	270	304,5	422,7	502	555	263,5	879	894	385	1000	720	221

68 Applicable to connections as per DIN 11851 (hygienic pipe union)
69 Applicable to flanged connections to EN 1092-1

Vitachrom DN 100, n ≈ 1450 rpm / 1750 rpm, pump set with levelling feet and motor shroud

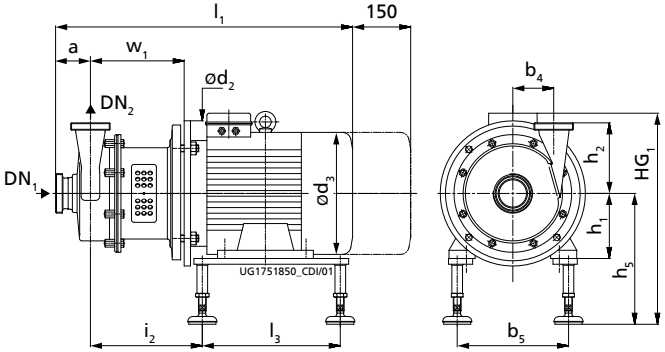

Pump set with levelling feet

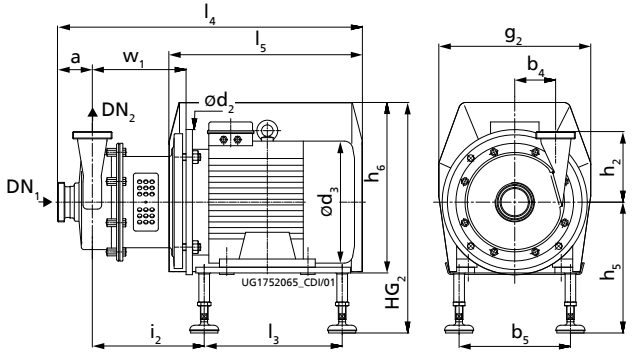

Pump set with levelling feet and motor shroud

Table 42: Overview of mating dimensions DN 100, pump set with levelling feet and motor shroud, dimensions in [mm]

Vitachrom	DN_1	DN_2	a	b_4	b_5	d_2	d_3	g_2	h_1	h_2[70]	h_2[71]	h_5 min	h_5 max	h_6	≈HG_1 max	≈HG_2 max	i_2	l_1[70]	l_1[71]	l_3	l_4	l_5	w_1
100-100-200 /154	100	100	100[70] (115)[71]	200	110	200	190	264	90	250	235	246[72]	256	305	384	446	97	565	580	285	676	450	151
100-100-200 /224	100	100		200	110	250	213	264	100	250	235	256[72]	266	305	401	446	120,5	618	633	310	720	470	165
100-100-200 /304	100	100		200	110	250	213	264	100	250	235	256[72]	266	305	401	446	120,5	653	668	310	720	470	165
100-100-200 /404	100	100		200	110	250	234	264	112	250	235	255[72]	265	305	413	446	107,5	642	657	330	716	470	165
100-100-200 /554	100	100		230	110	300	266	314	132	250	235	275[72]	285	350	452	491	144,5	707	722	345	819	550	188
100-100-200 /754	100	100		230	110	300	298	314	132	250	235	275[72]	285	350	452	491	163,5	735	750	345	819	550	188
100-100-200 /1104	100	100		280	110	350	325	372	160	250	235	291	313	423	510	564	241,5	873	888	385	1000	720	221
100-100-200 /1504	100	100		280	110	350	325	372	160	250	235	291	313	423	510	564	263,5	879	894	385	1000	720	221

70 Applicable to connections as per DIN 11851 (hygienic pipe union)
71 Applicable to flanged connections to EN 1092-1
72 Extended foot

Vitachrom DN 125, n ≈ 1450 rpm / 1750 rpm

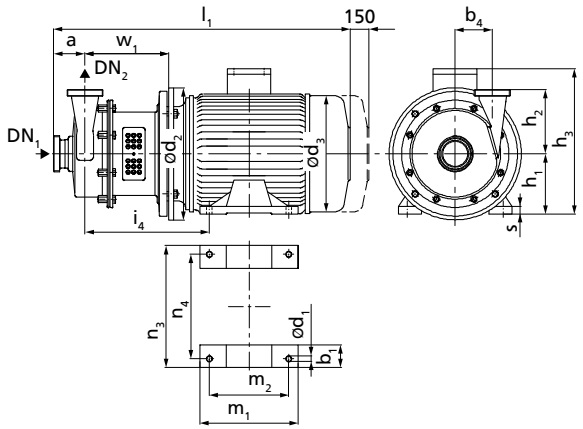

Pump set with motor feet

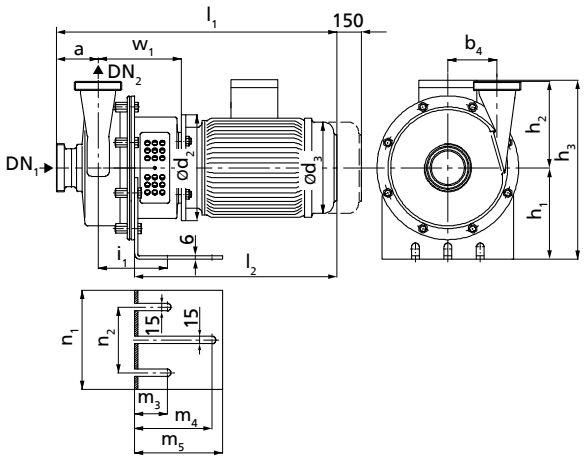

Pump set with angle foot

Table 43: Overview of mating dimensions DN 125, pump set with motor feet or angle foot, dimensions in [mm]

Size	DN_1	DN_2	a	$\approx b_1$	b_4	d_1	d_2	$\approx d_3$	h_1	h_2[73]	h_2[74]	$\approx h_3$	i_1	i_4	$\approx l_1$[73]	$\approx l_1$[74]	$\approx l_2$	m_1	m_2	m_3	m_4	m_5	n_1	n_2	n_3	n_4	w_1	s
125-125-200 /224	125	125	120[73] (135)[74]	-	110	12	250	213	180	250	235	315	138	249	659	674	377	196	160	30	120	160	260	180	176	140	186	12
125-125-200 /304	125	125		-	110	12	250	213	180	250	235	315	138	249	694	709	412	196	160	30	120	160	260	180	176	140	186	12
125-125-200 /404	125	125		-	110	12	250	234	180	250	235	328	138	256	683	698	401	226	190	30	120	160	260	180	176	140	186	12
125-125-200 /554	125	125		55	110	12	300	266	132	250	235	299	-	298	748	763	-	220	140	-	-	-	-	-	270	216	209	15
125-125-200 /754	125	125		59	110	12	300	298	132	250	235	299	-	298	776	791	-	240	178	-	-	-	-	-	270	216	209	15
125-125-200 /1104	125	125		70	110	15	350	325	160	250	235	357	-	350	914	929	-	300	210	-	-	-	-	-	320	254	242	21
125-125-200 /1504	125	125		70	110	15	350	325	160	250	235	357	-	350	920	935	-	314	254	-	-	-	-	-	320	254	242	21
125-125-200 /1854	125	125		70	110	15	350	325	160	250	235	357	-	350	920	935	-	314	254	-	-	-	-	-	320	254	242	21
125-125-200 /2204	125	125		80	110	15	350	370	160	250	235	442	-	363	978	993	-	320	241	-	-	-	-	-	360	279	242	23
125-125-200 /3004	125	125		85	110	19	400	422	200	250	235	505	-	375	1037	1052	-	388	305	-	-	-	-	-	400	318	242	30

73 Applicable to connections as per DIN 11851 (hygienic pipe union)
74 Applicable to flanged connections to EN 1092-1

Vitachrom DN 125, n ≈ 1450 rpm / 1750 rpm, pump set with ball feet and motor shroud

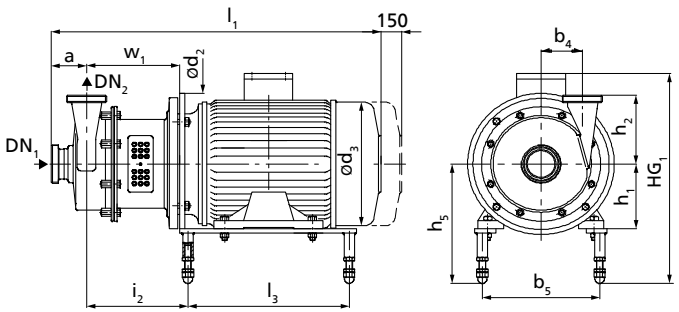

Pump set with ball feet

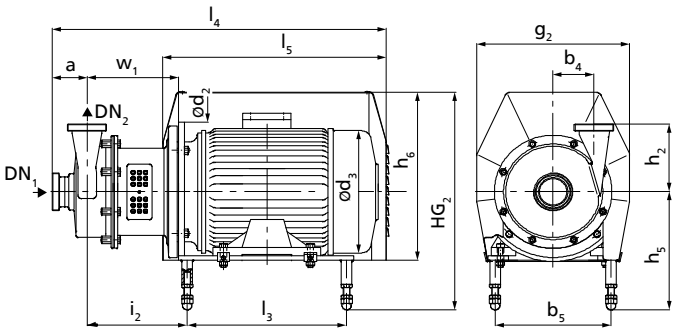

Pump set with ball feet and motor shroud

Table 44: Overview of mating dimensions DN 125, pump set with ball feet and motor shroud, dimensions in [mm]

Size	DN_1	DN_2	a	b_4	b_5	d_2	d_3	g_2	h_1	h_2[75]	h_2[76]	h_5 min	h_5 max	h_6	≈HG_1 max	≈HG_2 max	i_2	l_1[75]	l_1[76]	l_3	l_4	l_5	w_1
125-125-200 /224	125	125	120[75] (135)[76]	200	110	250	213	264	100	250	235	223	257,5	304,7	393	437	141,5	659	674	310	807	470	186
125-125-200 /304	125	125		200	110	250	213	264	100	250	235	223	257,5	304,7	393	437	141,5	694	709	310	807	470	186
125-125-200 /404	125	125		200	110	250	234	264	112	250	235	222	256,5	304,7	405	437	128,5	683	698	330	823	470	186
125-125-200 /554	125	125		230	110	300	266	314	132	250	235	242	276,5	349,7	444	482	165,5	748	763	345	921	550	209
125-125-200 /754	125	125		230	110	300	298	314	132	250	235	242	276,5	349,7	444	482	184,5	776	791	345	921	550	209
125-125-200 /1104	125	125		280	110	350	325	372	160	250	235	270	304,5	422,7	502	555	262,5	914	929	385	1042	720	242
125-125-200 /1504	125	125		280	110	350	325	372	160	250	235	270	304,5	422,7	502	555	284,5	920	935	385	1042	720	242
125-125-200 /1854	125	125		280	110	350	325	372	160	250	235	270	304,5	422,7	502	555	284,5	920	935	385	1042	720	242
125-125-200 /2204	125	125		305	110	350	370	402	180	250	235	290	325	493	587	626	310	978	993	385	1126	740	242
125-125-200 /3004	125	125		345	110	400	422	452	200	250	235	331	353	545	658	686	320	1037	1052	415	1193	830	242

75 Applicable to connections as per DIN 11851 (hygienic pipe union)
76 Applicable to flanged connections to EN 1092-1

Vitachrom DN 125, n ≈ 1450 rpm / 1750 rpm, pump set with levelling feet and motor shroud

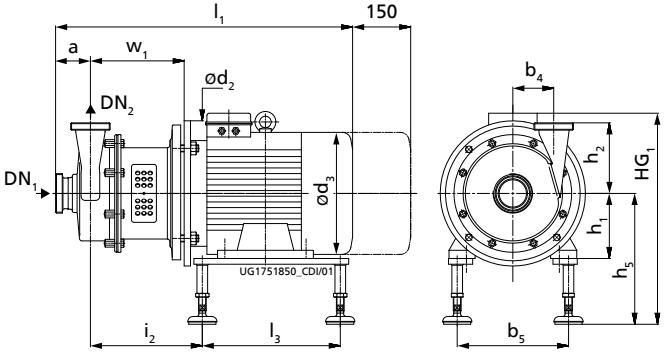

Pump set with levelling feet

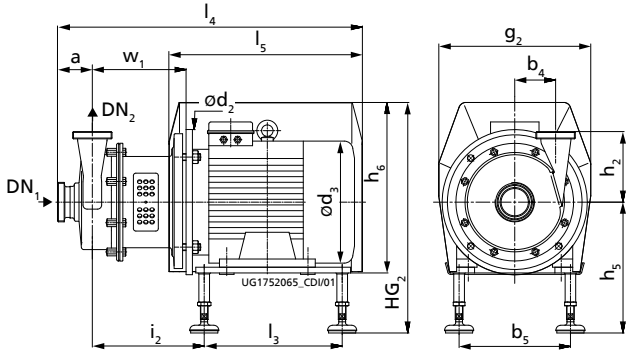

Pump set with levelling feet and motor shroud

Table 45: Overview of mating dimensions DN 125, pump set with levelling feet and motor shroud, dimensions in [mm]

Vitachrom	DN_1	DN_2	a	b_4	b_5	d_2	d_3	g_2	h_1	h_2[77]	h_2[78]	h_5 min	h_5 max	h_6	≈HG_1 max	≈HG_2 max	i_2	l_1[77]	l_1[78]	l_3	l_4	l_5	w_1
125-125-200 /224	125	125	120[77] (135)[78]	200	110	250	213	264	100	250	235	256[79]	266	305	401	446	141,5	659	674	310	807	470	186
125-125-200 /304	125	125		200	110	250	213	264	100	250	235	256[79]	266	305	401	446	141,5	694	709	310	807	470	186
125-125-200 /404	125	125		200	110	250	234	264	112	250	235	255[79]	265	305	413	446	128,5	683	698	330	823	470	186
125-125-200 /554	125	125		230	110	300	266	314	132	250	235	275[79]	285	350	452	491	165,5	748	763	345	921	550	209
125-125-200 /754	125	125		230	110	300	298	314	132	250	235	275[79]	285	350	452	491	184,5	776	791	345	921	550	209
125-125-200 /1104	125	125		280	110	350	325	372	160	250	235	291	313	423	510	564	262,5	914	929	385	1042	720	242
125-125-200 /1504	125	125		280	110	350	325	372	160	250	235	291	313	423	510	564	284,5	920	935	385	1042	720	242
125-125-200 /1854	125	125		280	110	350	325	372	160	250	235	291	313	423	510	564	284,5	920	935	385	1042	720	242
125-125-200 /2204	125	125		305	110	350	370	402	180	250	235	311	333	493	595	634	310	978	993	385	1126	740	242
125-125-200 /3004	125	125		345	110	400	422	452	200	250	235	360	382	545	687	702	320	1037	1052	415	1193	830	242

77 Applicable to connections as per DIN 11851 (hygienic pipe union)
78 Applicable to flanged connections to EN 1092-1
79 Extended foot

Installation information

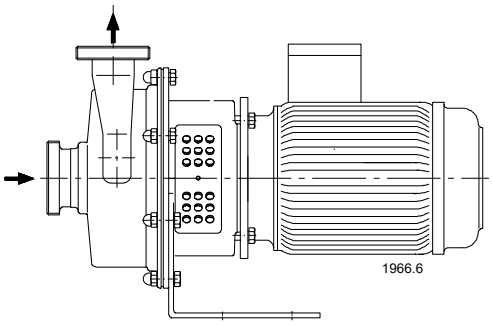

Fig. 2: Pump with angle foot

As-delivered condition for horizontal installation, fastened below

For any other installation positions, contact KSB.

NOTE!
Vertical installation with the motor below is impermissible.

Pump accessories

- Standard pump foot (angle foot)
- Vertically adjustable ball feet / levelling feet
- Motor shroud made of stainless steel
- System for supplying the mechanical seal
- Motor soleplate
- Residual drainage of pump casing

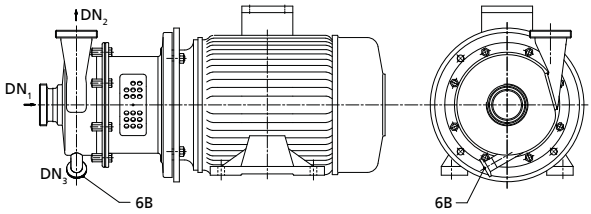

Fig. 3: Connection for residual drainage

Exploded view / List of components

Exploded view, size group I with ball feet

This illustration applies to the following pump sizes:

050-050-125	065-065-125	080-080-125
050-050-160	065-065-160	080-080-160
050-050-200	065-065-200	

[Supplied in packaging units only

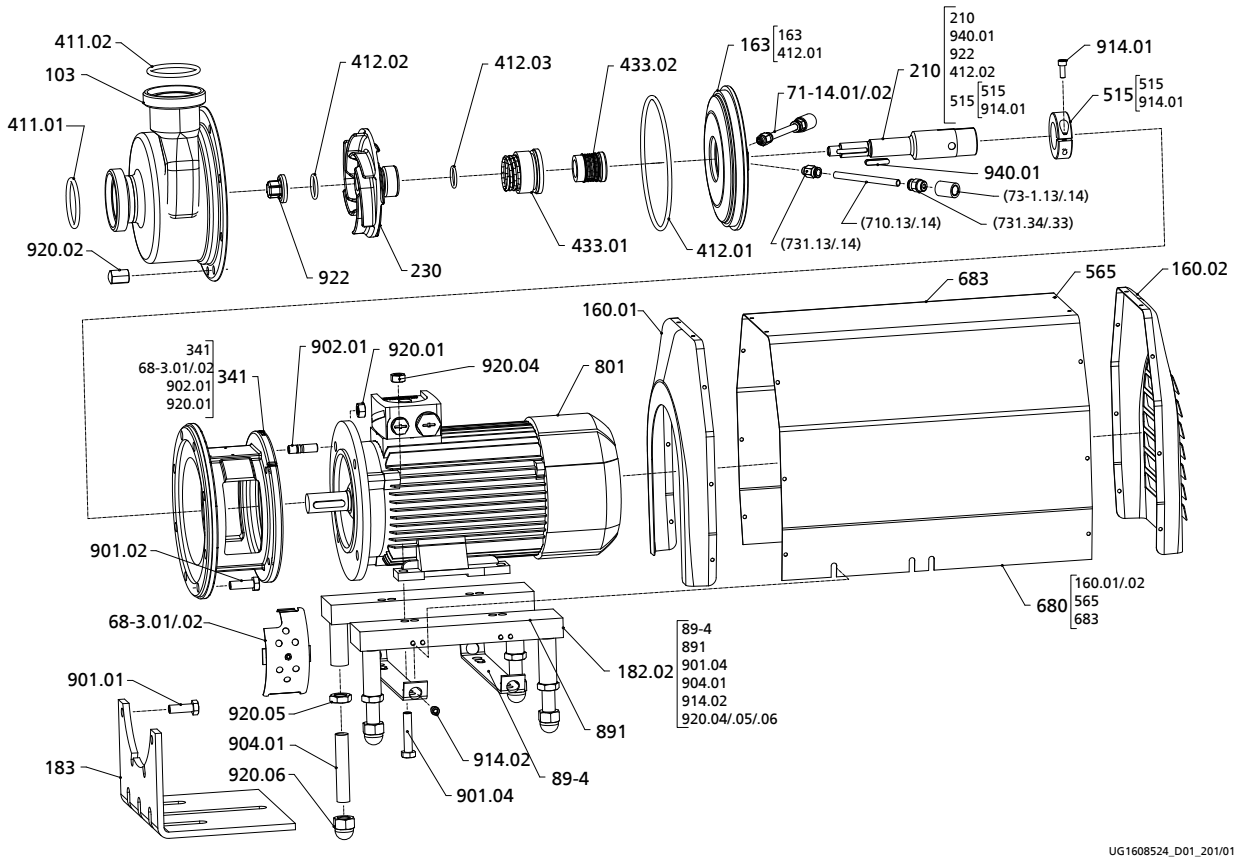

Fig. 4: Exploded view

Table 46: List of components

Part No.	Description	Part No.	Description
103	Pump casing	683	Hood
160.01/.02	Cover	71-14.01/.02	Connection pipe
163	Discharge cover	73-1.13/.14	Socket
182.02	Ball feet	710.13/.14	Pipe
183	Support foot[80)]	731.13/.14/.33/.34	Pipe union
210	Shaft	89-4	Shim
230	Impeller	801	Flanged motor
341	Drive lantern	891	Base frame
411.01/.02	Joint ring	901.01/.02/.04	Hexagon head bolt
412.01/.02/.03	O-ring	902.01	Stud
433.01/.02	Mechanical seal	904.01	Grub screw
515	Locking ring	914.01/.02	Hexagon socket head cap screw
565	Rivet	920.01/.02/.04/.05/.06	Nut
68-3.01/.02	Cover plate	922	Impeller nut
680	Guard	940.01	Key

80 Up to motor size 112M

Exploded view, size group I with levelling feet

This illustration applies to the following pump sizes:

050-050-125	065-065-125	080-080-125
050-050-160	065-065-160	080-080-160
050-050-200	065-065-200	

[Supplied in packaging units only

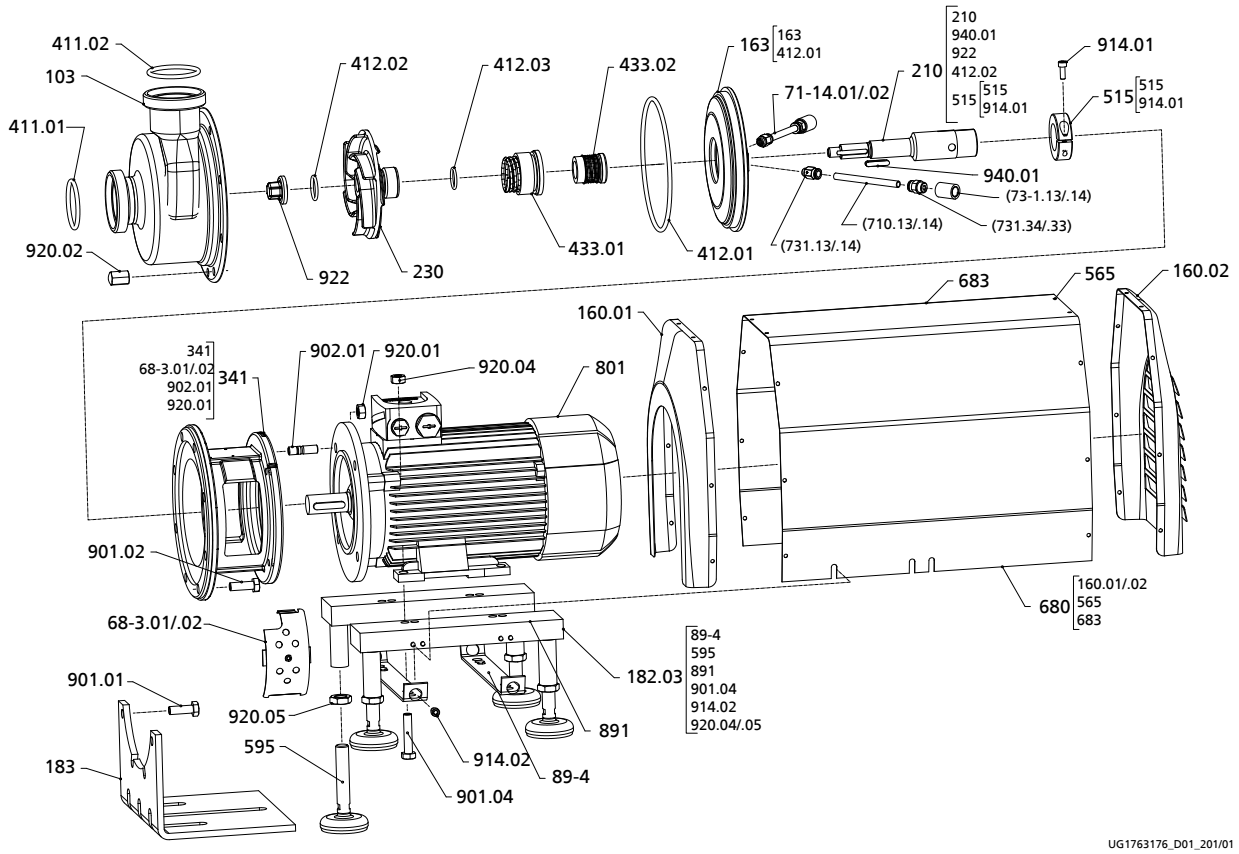

Fig. 5: Exploded view

Table 47: List of components

Part No.	Description	Part No.	Description
103	Pump casing	680	Guard
160.01/.02	Cover	683	Hood
163	Discharge cover	71-14.01/.02	Connection pipe
182.03	Levelling feet	73-1.13/.14	Socket
183	Support foot[81)]	710.13/.14	Pipe
210	Shaft	731.13/.14/.33/.34	Pipe union
230	Impeller	89-4	Shim
341	Drive lantern	801	Flanged motor
411.01/.02	Joint ring	891	Base frame
412.01/.02/.03	O-ring	901.01/.02/.04	Hexagon head bolt
433.01/.02	Mechanical seal	902.01	Stud
515	Locking ring	914.01/.02	Hexagon socket head cap screw
565	Rivet	920.01/.02/.04/.05	Nut
595	Support	922	Impeller nut
68-3.01/.02	Cover plate	940.01	Key

81 Up to motor size 112M

Exploded view, size group II with ball feet

This illustration applies to the following pump sizes:

050-050-250 065-065-250 080-080-250 100-100-200 125-125-200

[Supplied in packaging units only

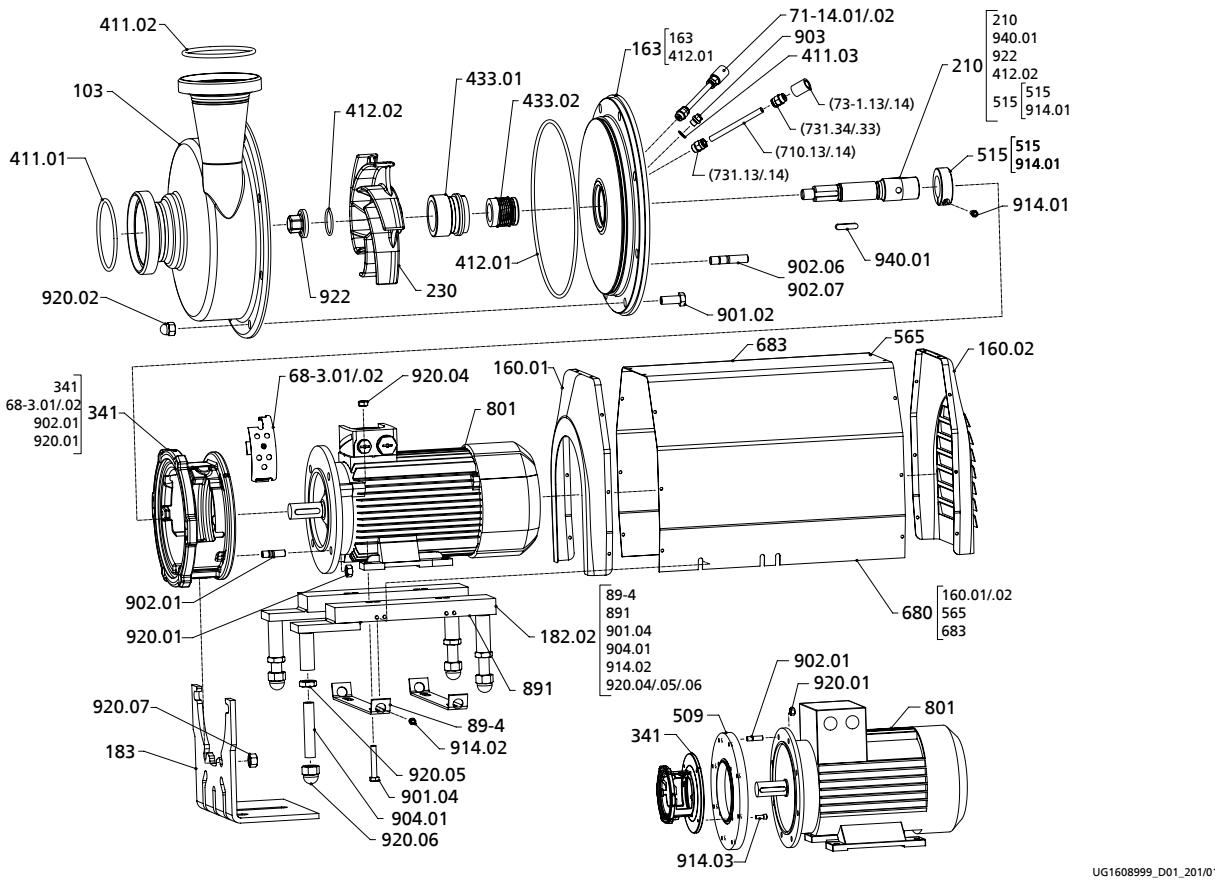

Fig. 6: Exploded view

Table 48: List of components

Part No.	Description	Part No.	Description
103	Circular casing	683	Hood
160.01/.02	Cover	71-14.01/.02	Connection pipe
163	Discharge cover	73-1.13/.14	Socket
182.02	Ball feet	710.13/.14	Pipe
183	Support foot	731.13/.14/.33/.34	Pipe union
210	Shaft	801	Flanged motor
230	Impeller	89-4	Shim
341	Drive lantern	891	Base frame
411.01/.02/.03/.04	Joint ring	901.02/.04	Hexagon head bolt
412.01/.02	O-ring	902.01/.06/.07	Stud
433.01/.02	Mechanical seal	903	Screw plug
509	Intermediate ring	904.01	Grub screw
515	Locking ring	914.01/.02/.03	Hexagon socket head cap screw
565	Rivet	920.01/.02/.04/.05/.06/.07	Nut
68-3.01/.02	Cover plate	922	Impeller nut
680	Motor shroud	940.01	Key

2023-06-02

1966.5/12-EN

LENNTECH
WATER TREATMENT SOLUTIONS
info@lenntech.com Tel. +31-152-610-900
www.lenntech.com Fax. +31-152-616-289