for a greener tomorrow

LENNTECH
WATER TREATMENT SOLUTIONS

MITSUBISHI ELECTRIC
Changes for the Better

FACTORY AUTOMATION

INVERTER
FR-A800

Unparalleled Performance. Uncompromising Quality.
[Addition of CC-Link IE TSN models]

800 series

- Approach to the leading drive performance
- Security & safety
- Easy setup & easy to use
- Eco-friendly factories
- System support

GLOBAL IMPACT OF MITSUBISHI ELECTRIC

Through Mitsubishi Electric's vision, "Changes for the Better" are possible for a brighter future.

Changes for the Better

We bring together the best minds to create the best technologies. At Mitsubishi Electric, we understand that technology is the driving force of change in our lives. By bringing greater comfort to daily life, maximizing the efficiency of businesses and keeping things running across society, we integrate technology and innovation to bring changes for the better.

Mitsubishi Electric is involved in many areas including the following

Energy and Electric Systems
A wide range of power and electrical products from generators to large-scale displays.

Electronic Devices
A wide portfolio of cutting-edge semiconductor devices for systems and products.

Home Appliance
Dependable consumer products like air conditioners and home entertainment systems.

Information and Communication Systems
Commercial and consumer-centric equipment, products and systems.

Industrial Automation Systems
Maximizing productivity and efficiency with cutting-edge automation technology.

Features	4	1
Application Example, PLC Function, FR Configurator2	24	2
Connection Example	32	3
Standard Specifications	33	4
Outline Dimension Drawings	40	5
Terminal Connection Diagram, Terminal Specification Explanation	52	6
Operation Panel (FR-DU08(-01)), LCD Operation Panel (FR-LU08(-01))	67	7
Parameter List	72	8
Explanations of Parameters	117	9
Protective Functions	177	10
Option and Peripheral Devices	181	11
Low-Voltage Switchgear/Cables	211	12
Precaution on Selection and Operation	217	13
Compatible Motors	223	14
Compatibility	245	15
Warranty, Inquiry	249	16

Unparalleled Performance. Uncom

What is required of inverters in this constantly changing world?

At Mitsubishi Electric, we have pursued the answer to this question through constant innovation and evolution.

Introducing our extensive range of high-value,

next-generation inverters delivering outstanding drive performance in any environment,

and a wealth of functionality covering startup to maintenance.

We utilized the traditional Mitsubishi Electric philosophy to further perfect our inverters.

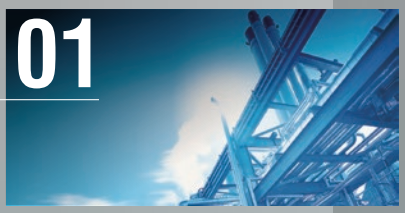

APPROACH TO THE LEADING DRIVE PERFORMANCE

The enhanced Real sensorless vector control and vector control serve the needs of all machinery types.

SECURITY & SAFETY

Rapid response is obtained when an unexpected trouble occurs.

EASY SETUP & EASY TO USE

Fully equipped with a variety of simple functions and equipment to improve work efficiency.

ECO-FRIENDLY FACTORIES

Save energy while increasing factory production.

SYSTEM SUPPORT

Numerous functions and the extensive lineup of models are ready to support various systems.

A800

promising Quality.

APPROACH TO THE LEADING DRIVE PERFORMANCE

The new series is equipped with the new state-of-the-art high-speed processor developed by Mitsubishi Electric. With better control performance and response level, safe and accurate operation is assured in a diverse range of applications.

Swift, Smooth, yet Robust

The enhanced Real sensorless vector control and vector control serve the needs of all machinery types.

The vector control is available when a vector control compatible option is installed.

(1) For high-quality products

High response

Response speed Real sensorless vector control **50 Hz**[*1] A700: 20 Hz
Vector control **130 Hz**[*2] A700: 50 Hz

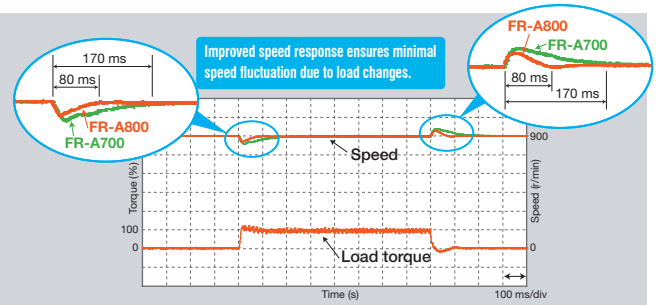

[Example of changes in actual rotation speed with impact load]
(With Real sensorless vector control, SF-PR 4P motor (3.7 kW))

Fast response terminal
The response delay time is reduced.

•**Terminal response**
A700: 5 to 20 ms ➡ A800: 2 to 3 ms

Line control

Line control is necessary for the machining of elongated products such as paper, thread, wires, all kinds of sheet, and tape. This will respond rapidly to changes in line speed and suppress the occurrences of winding unevenness. This contributes to a steady supply of high-quality products.

*1 : At 3.7 kW with no load. Differs depending on the load conditions and motor capacity.
*2 : The option (FR-A8AP, FR-A8AL, or FR-A8TP) is required.
Speed response: The speed response indicates how fast the inverter follows the change in the speed command. (The larger value indicates the better speed trackability.)

(2) Perform ultra-fine processing

High-speed rotation

Operating frequency Real sensorless vector control and vector control **400 Hz** A700: 120 Hz
V/F control **590 Hz**[*3] A700: 400 Hz

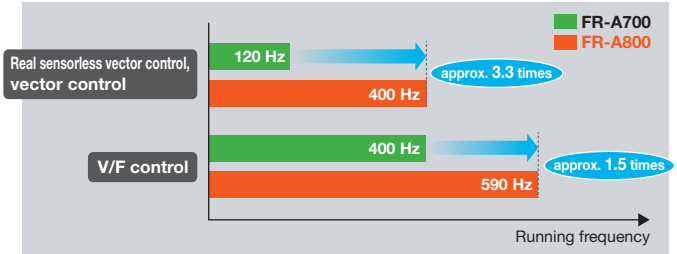

Machine tool

Cutting-edge machine tools are harder and thinner than ever before to be applicable to diverse new materials.
High-speed rotation is required more than ever before in order to be applicable for fine and precise cutting on hard and difficult-to-grind materials.

*3: According to the review result of the export control order about frequency changers, the upper limit of output frequency was determined to be 590 Hz for standard models.

(3) Swiftly move heavy weights

High torque at low speed

Starting torque (When at 0.3 Hz)
Real sensorless vector control **200%** (ND rating)[*4],
Vector control **200%** (ND rating)[*4]
(150% of initial setting for 5.5K and higher)

Zero-speed torque
Vector control **200%**. (Select HD rating.)[*4]

Speed control range
V/F control **1:10** (6 to 60 Hz: Driving)
Advanced magnetic flux vector control **1:120** (0.5 to 60 Hz: Driving)
Real sensorless vector control **1:200** (0.3 to 60 Hz: Driving)
Vector control **1:1500** (1 to 1500 r/min: Both driving/regeneration)

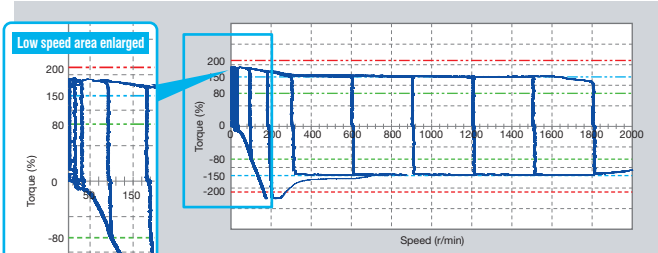

[Example of speed-torque characteristics with Real sensorless vector control]
When offline auto tuning is performed for the SF-PR 4P motor (15 kW). In the low-speed range, the torque increases by the increased magnetic excitation. Torque characteristics in the low-speed range can be set in the parameters.

Cranes

Cranes are in operation daily at ports carrying fully-laden containers in response to strong demand from all over the world. Our new inverter realizes smooth cargo handling work at low speed and high torque for the slow and stable movements required for heavy objects.

*4: Refer to page 17 for the multiple rating setting.

(4) For accurate and stable transport between machines

PM sensorless vector control

• What is a permanent magnet (PM) motor?

A PM motor is a synchronous motor with strong permanent magnets embedded in its rotor. The two major PM motor types are: the interior permanent magnet (IPM) motor with its magnets embedded inside the rotor, and the surface permanent magnet (SPM) motor with its permanent magnets attached on the rotor surface.

• What is PM sensorless vector control?

The speed and magnetic pole positions, the two essential bits of information to control a PM motor, are detected without a sensor (encoder). The speed detection internally-performed in an inverter enables highly accurate control of a PM motor, almost as accurate as an AC servo system, without the need of a sensor (encoder)*5.
Combining with Mitsubishi Electric MM-CF series IPM motors facilitates aspects of high-level control with no encoder such as **"simple positioning"***6 and **"zero speed torque"**.

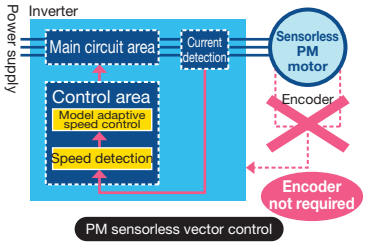

• Easy maintenance for sensor (encoder)-less motor

- No additional cables means less wiring space required.
- Improved reliability is obtained in unfavorable operating environments. (e.g. high vibration)
- PM motors are usually smaller and lighter than induction motors.

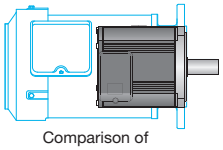

Comparison of SF-PRF 1.5 kW 4P and MM-CF152

Transfer of circuit boards

The Simple positioning control delivers a precision workpiece, such as a printed substrate, to a precise position.
Transfer of fragile glass substrates can be performed with a highly accurate driving system.

*5: Speed fluctuation ratio: ±0.05% (digital input)

$$\text{Speed fluctuation ratio} = \frac{\text{Speed under no load} - \text{Speed under rated load}}{\text{Rated speed}} \times 100(\%)$$

*6: Positional accuracy (with no load) of 1.5K and lower: ±1.8°, 2K and higher: ±3.6°

(5) Taking motor performance to the max

Induction motors and magnet motors can be combined freely

• The cutting-edge auto tuning function

The PM motor auto tuning function, which has been newly developed, enables sensorless operation of other manufacturers' permanent magnet (PM) motors.
Operation with all Mitsubishi Electric induction motors and PM motors, in addition to induction motors and PM motors from other manufacturers*7, is possible. That means you need less motors for spare and stocks.
(With IPM motors other than MM-CF and PM motors manufactured by other companies, starting torque is limited to 50%, and simple positioning control and zero speed torque cannot be used even if tuned.)

*7: Tuning may not be available depending on its motor characteristics.

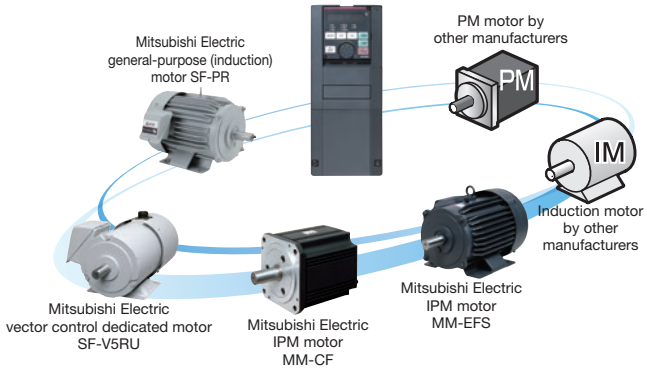

• Low speed, high torque realized with SF-PR motor

By combining with Mitsubishi Electric's high-performance, energy-saving motor SF-PR, 100% continuous operation is possible from a low speed of 0.3 Hz for inverters of any capacity.
(when using Real sensorless vector control)

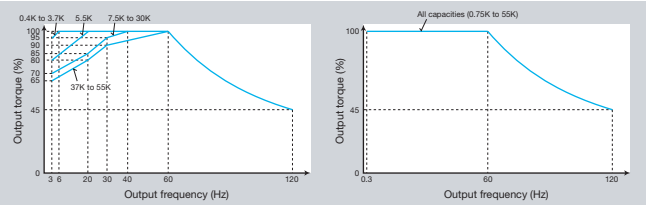

SF-JR continuous operation torque characteristics (Motor input voltage: 200 V)

SF-PR continuous operation torque characteristics (Motor input voltage: 200 V)

• Sharing the spare inverter

One spare inverter is enough for the two types of motors (IM and PM).

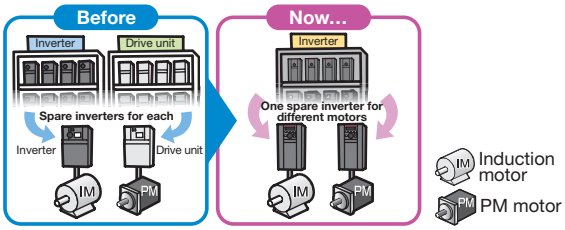

SECURITY & SAFETY

Swift recovery ensured by preventing trouble beforehand.
The FR-A800 has been developed with reliability and safety foremost in mind.

For Improved Equipment Reliability

Rapid response is obtained when an unexpected trouble occurs.

(1) Improved system safety

Safety standards compliance NEW

Controls with safety functions can be easily performed.
The Safe Torque Off (STO) safety function is supported by the inverter. The inverter with the safety function can comply with the safety standards without incurring much expenses.

- PLe and SIL3 are supported as standard.
  - ISO13849-1:2015 Category 3/PLe
  - IEC62061:2015 / IEC61800-5-2:2016 / IEC61508:2010 SIL3

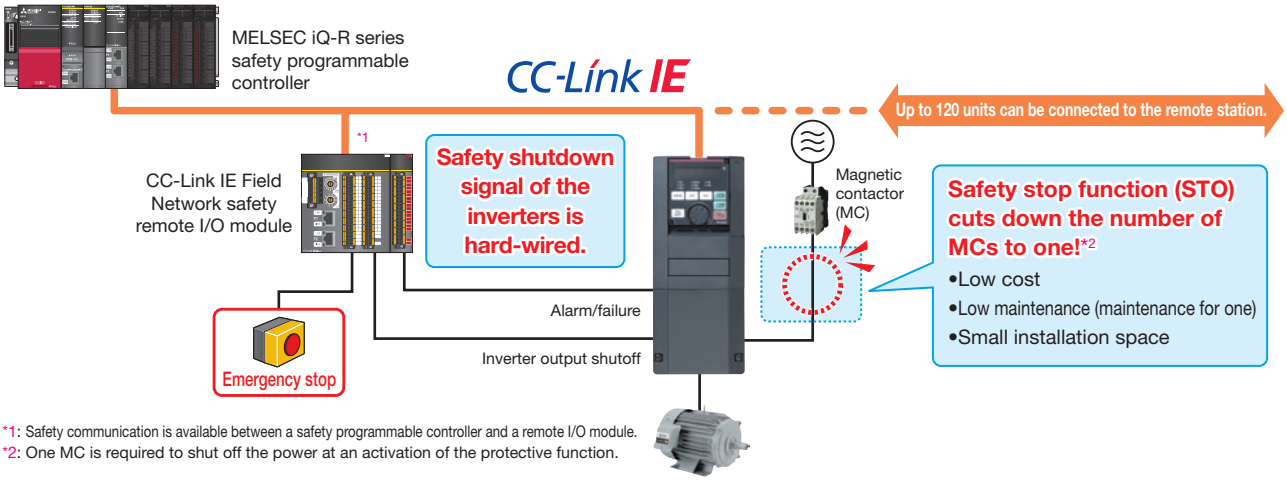

*1: Safety communication is available between a safety programmable controller and a remote I/O module.
*2: One MC is required to shut off the power at an activation of the protective function.

(2) Reliable and secure maintenance

Standard 24 VDC power supply for the control circuit NEW

In addition to the existing power supply input terminals (R1 and S1) of the control circuit, 24 VDC input is equipped as standard. The 24 VDC power supplied from outside can be fed to the control circuit locally, enabling the parameter settings, communication operation and safety maintenance without turning ON the main power.

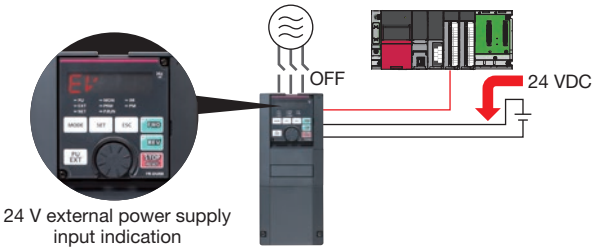

Prevention of trouble with temperature monitoring NEW

The inverter is equipped with an internal temperature sensor, which outputs a signal when the ambient temperature is high.
This facilitates the detection of rises in temperature inside the inverter following cooling fan malfunction, or rises in ambient temperature due to inverter operating conditions.

(3) Long life components and life check function

Long life components

- The service life of the cooling fans is now 10 years*3.
  The service life can be further extended by ON/OFF control of the cooling fan.
- Capacitors with a design life of 10 years*3*4 are adapted.
  With these capacitors, the service of the inverter is further extended.
- Estimated service lifespan of the long-life parts

Components	Estimated lifespan of the FR-A800*3	Guideline of JEMA*5
Cooling fan	10 years	2 to 3 years
Main circuit smoothing capacitor	10 years*4	5 years
Printed board smoothing capacitor	10 years*4	5 years

*3: Surrounding air temperature: Annual average of 40°C (free from corrosive gas, flammable gas, oil mist, dust and dirt).
The design life is a calculated value from the LD rating and is not a guaranteed product life.
*4: Output current: 80% of the inverter LD rating
*5: Excerpts from "Periodic check of the transistorized inverter" of JEMA (Japan Electrical Manufacturer's Association).

Enhanced life diagnosis function

- An internal thermal sensor is equipped to all inverters as standard, which enables monitoring of the installation environment.
  Use this function as a guide for the life diagnosis. NEW
- Maintenance timers are available for up to three peripheral devices, such as motor and bearing.

"Maintenance 1 output" warning

(4) Quick reaction to troubles

Easy fault diagnosis NEW

- The operating status (output frequency, etc.) immediately before the protection function activates can be stored in the inverter built-in RAM with the trace function. The stored data (trace data) can be copied to a USB memory device or directly imported to a computer, facilitating trouble analysis using the inverter setup software (FR Configurator2).

Trace data stored in the built-in RAM is deleted when the power is turned OFF or the inverter is reset.

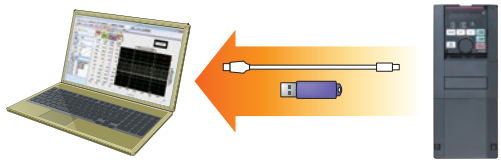

- Clock setting is now available in addition to the already-available cumulative energization time. The time and date at a protective function activation are easily identified. (The clock is reset at power-OFF.) The date and time are also saved with the trace data, making the fault analysis easier. By using the real-time clock function with the optional liquid crystal display (LCD) operation panel (FR-LU08) (when using battery), the time is not reset even when the power supply is turned OFF.

Backup/restore NEW

- The GOT can be used for backing up inverter's parameter settings and the data used in the PLC function of inverter, and the backup stored in the GOT can be used to restore the data in the inverter.

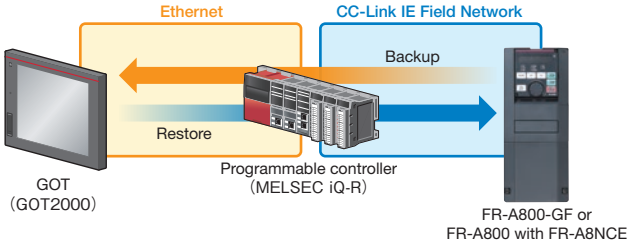

(5) Renewal assurance

Intercompatibility with existing models

- The inverter installation method is the same as that for the FR-A700 series, eliminating any concerns over replacement.

  Furthermore, FR-A700 series control circuit terminal blocks can be installed with the use of an option (FR-A8TAT).

- The terminal response adjustment function allows a user to adjust the response speed in accordance with the existing facility. NEW
- The conversion function of Inverter Setup Software (FR Configurator2) enables parameter copy from an FR-A700 and even from an FR-A500 (to be supported soon).

For the compatibilities and differences with the FR-A700 series, refer to page 245.

(6) Reasons for high quality

Design considering the hazardous environment

3D-vibration analysis is performed to confirm the vibration resistance. The analysis is also useful to find the best layout position and to further improve the product's rigidity.

Assuming a hazardous service condition, the product reliability is thoroughly assessed in the design stage. Every effort is made to ensure the best quality of the Mitsubishi Electric inverter.*6

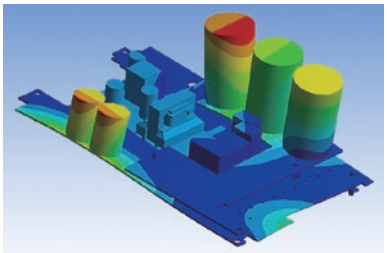

3D-vibration analysis

Heat control for high quality

Resistance against heat is what makes an inverter reliable. A well-designed heat-resistant power module is essential in a reliable inverter. From the power module's design stage, its heat resistance is carefully considered.*6

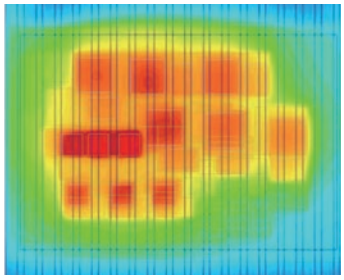

Hydraulic analysis and heat simulation

*6: The usage beyond the product's specified service condition is not guaranteed.

EASY SETUP & EASY TO USE

A range of equipment and functions are prepared allowing work to be performed anywhere to suit product life cycles.

From Startup to Maintenance

Fully equipped with a variety of simple functions and equipment to improve work efficiency.

(1) Streamlining the startup process

Parameter copying with USB memory NEW

- A USB host connecter (A type), which allows external device connections, has been added.
  Parameters can be copied to commercial USB memory devices.
  (Refer to page 69)

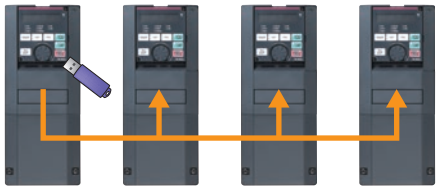

USB 2.0 (full speed) supported

Easy setup with the Inverter Setup Software (FR Configurator2)

- It is a software which is easy to use and has unity as Mitsubishi Electric FA products with MELSOFT common design and good operability.
- Easy plug-and-play connection to USB terminal equipped as standard

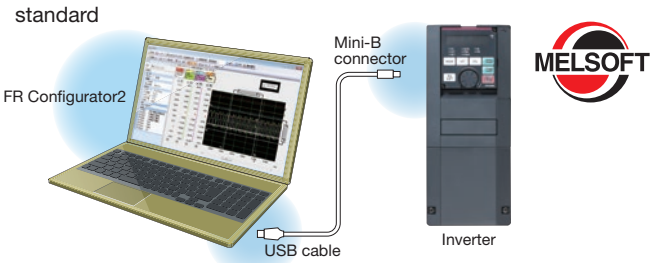

- Free trial version, which contains start-up functions, is available. It can be downloaded at Mitsubishi Electric FA Global Website.

For FR Configurator2, please refer to page 30.

Easy wiring to the control circuit NEW

Spring clamp terminals have been adopted for control circuit terminals. Wires can be protected against loosening under vibrations during transportation of the inverter. Ten additional terminals are used as compared to the FR-A700 series. Round crimping terminals can also be used by employing a control terminal option (FR-A8TR).

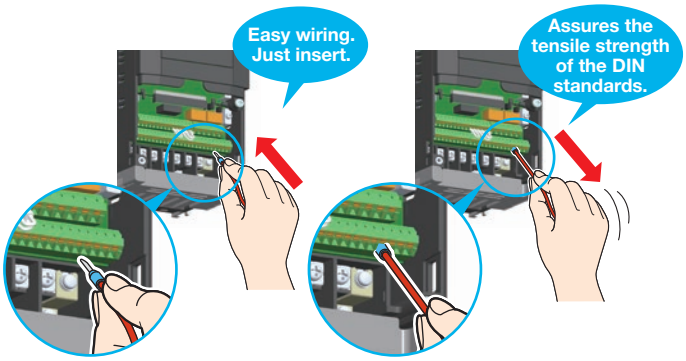

(2) Easy-to-follow display improves the operability

Easy operation with GOT NEW

- Automatic communication is possible without specifying any parameter settings simply by connecting to the GOT2000 series.
- The PLC function device monitor can be displayed at the GOT2000 series.
  Batch control of multiple inverter device monitors is possible with a single GOT unit.
- The sample screen data for the A800 can be found in the screen design software of the GOT2000 series. The newest version of the screen design software can be downloaded from the Mitsubishi Electric FA Global Website.

Easy-to-follow parameter configuration NEW

One of the selectable mode by the operation panel is the Group parameter mode, which provides intuitive and simple parameter settings. (The conventional parameter setting mode is selected by default.)

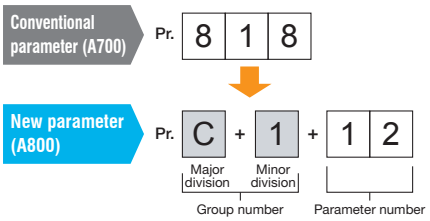

Major division	Name
E	Environment
F	Acceleration/deceleration
D	Start and frequency commands
H	Protective function
M	Monitor
T	Multi function I/O terminal
C	Motor constant
A	Applications
B	Applications (position control)
N	Communication
G	Control

Easy-to-read operation panel NEW

A 5-digit, 12-segment display has been adopted for the operation panel (FR-DU08) for a more natural character display. Furthermore, an optional LCD operation panel (FR-LU08) adopting an LCD panel capable of displaying text and menus is also available.

FR-DU08 (12-segment type)

FR-LU08 (LCD type) (option)

(3) To aid with maintenance

Reduced wiring check time

Split-type covers are adapted for all capacity models.
Maintenance is now easy because all an operator has to do is to remove the cover for the target wiring area.

Maintenance and control of multiple inverters (Option) NEW

Serial number reading is possible using the optional LCD operation panel (FR-LU08) or the Inverter Setup Software (FR Configurator2). Administration of different inverters has become much more simple.

ECO-FRIENDLY FACTORIES

The power consumption by motors is said to amount about the half of all power consumption made by the Japanese manufacturing industry. Factories can save more energy without dropping their production. Less energy and more production—the FR-A800 series will help you to get the both.

The Next Step — Go Green

Save energy while increasing factory production.

(1) Energy-saving function tailored to system, application

Variety of functions

• Check the energy saving effect at a glance

- You can check the energy saving effect on the energy saving monitor.
- The measured output power amount can be output in pulses.

• Reduce power consumption during standby

- Control circuits other than those for power-related parts can be operated with 24 VDC power supplied from an external power source. NEW
  Since the control circuit can use the external 24 VDC, other power control circuits can stay OFF while no driving is required, and that saves the standby energy.
- By turning the cooling fan ON/OFF based on the inverter status, wasteful power consumption during stoppages can be reduced.

• Save energy with Optimum excitation control NEW

The excitation current is constantly adjusted to drive the motor in the most efficient method which leads to energy saving.
For example, with optimum excitation control with motor load torque of 10% when using the SF-JR, motor efficiency has increased by approximately 15% over the previous V/F control method.

• Effective use of regenerative energy (option)

Multiple inverters can be connected to the power regeneration common converter (FR-CV)/high power factor converter (FR-HC2) via a common PN bus.

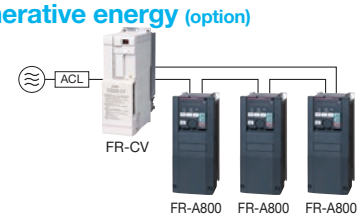

Regenerative power is used at other inverters, and surplus energy is returned to the power supply, resulting in energy saving. The 315K or higher models are inverter-converter separated types, which are suitable for power regeneration. NEW

(2) PM motor contributes to the energy saving in factories

PM motor

If the inverter is being used for an application requiring constant-torque, such as a conveyor, factory energy savings can be achieved by replacing your current induction motors with permanent magnet motors (PM motors).
(Tuning is required for an IPM motor other than MM-CF, and for the PM motors of other manufacturers.)

• Why is a PM motor so efficient?

- The current does not flow to the rotor (secondary side), so there is no secondary copper loss.
- Magnetic flux is generated by permanent magnets, so less current is required to drive a motor.

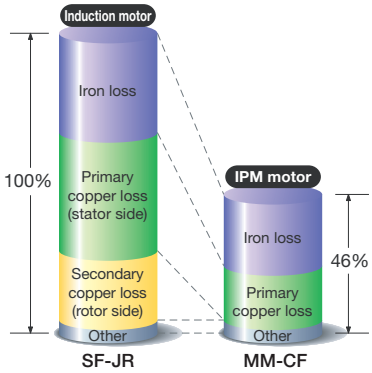

[Comparison of motor losses]
(Example of 1.5 kW motors)

Conveyor

A conveyor transports different goods and products according to its application. A PM motor can keep the carrying speed constant while saving energy.

05 System Support

SYSTEM SUPPORT (NETWORK)

Further Visualization of Information

A seamless data interface is offered.

(1) Ethernet communication function integrated

Inverter with communication function NEW

FR-A800-GN CC-Link IE TSN

With the CC-Link IE TSN (Time Sensitive Networking) communication function, data can be transmitted to IT systems while performing real-time cyclic communication control. This will contribute to startup time reduction and maintainability improvement.

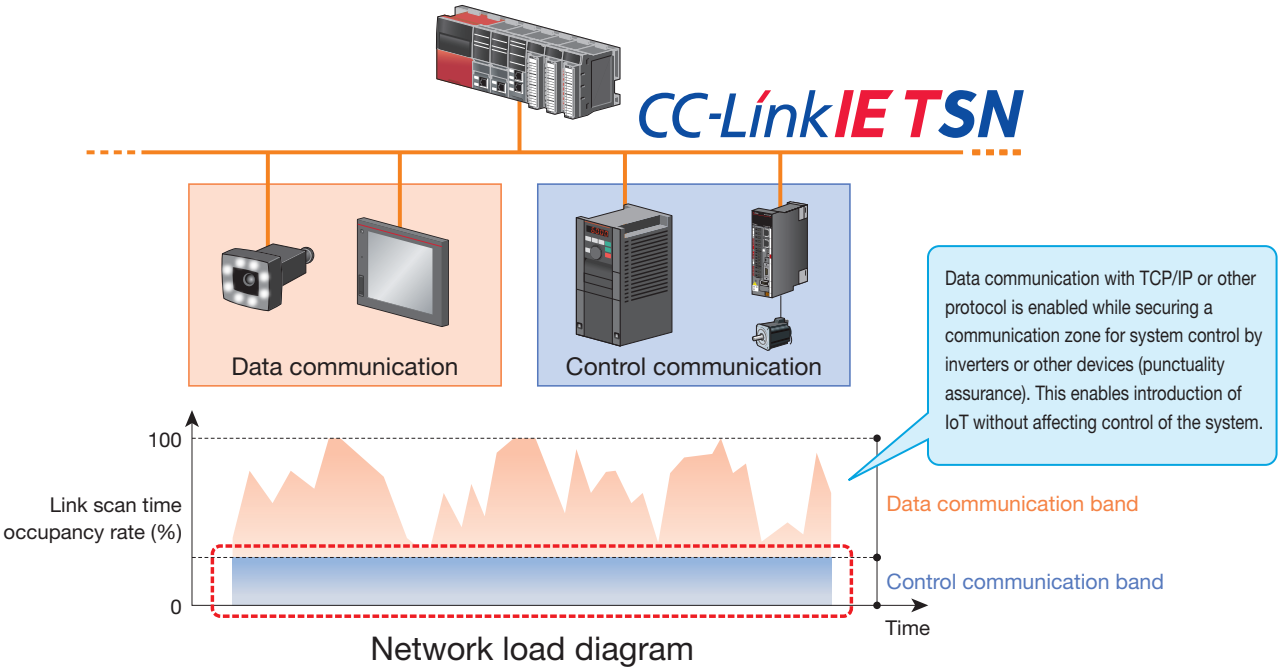

Startup time reduction

Station numbers are easily set with rotary switches.

Automatic detection of the network configuration by the engineering software (GX Works3) reduces the startup time.

Problems at startup such as line faults can be discovered at a glance with the diagnostic function.

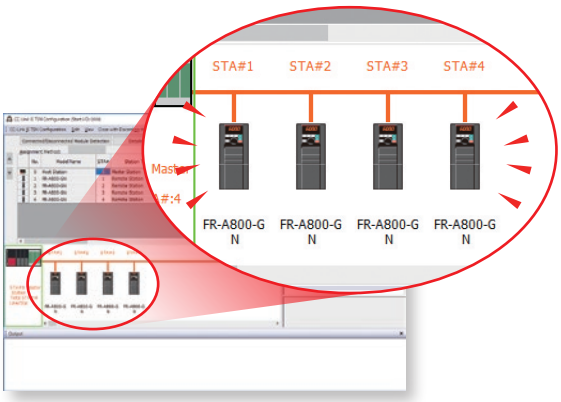

Example of GX Works3 screen

Improved maintainability

Time synchronization allows for real-time monitoring.

This enables trouble analysis to be performed right after an error has occurred.

FR Configurator2 can be connected via Ethernet, which makes maintenance work easier.

FR-A800-GF CC-Link IE Field

The inverter has the CC-Link IE Field Network communication function, which enables immediate operation via the CC-Link IE Field Network.

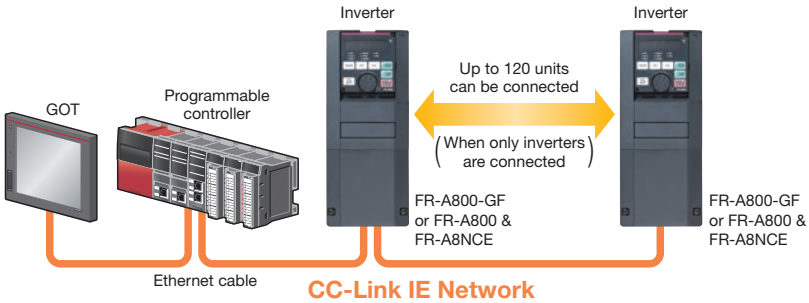

FR-A800-E CC-Link IE Field Basic

The CC-Link IE Field Network Basic is supported, so the network can be created easily. The inverter's status can be monitored and the parameters can be set via Internet. (MODBUS/TCP is also supported.)

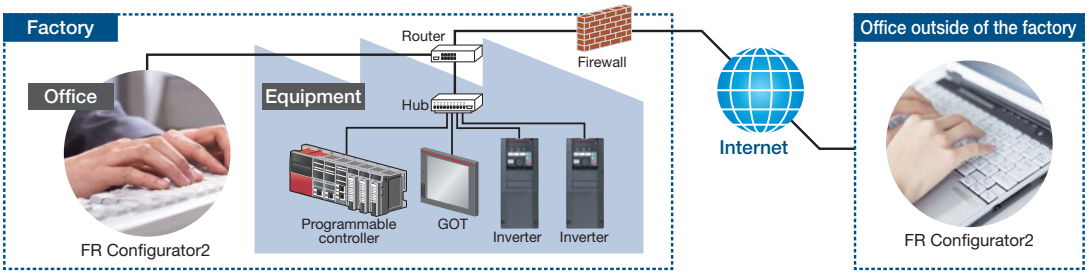

CC-Link family compatible with the FR-A800 series inverters

Item		CC-Link IE TSN	CC-Link IE Field	CC-Link IE Field Basic	CC-Link
Compatible inverter		FR-A800-GN, FR-A800 & FR-A8NCG	FR-A800-GF, FR-A800 & FR-A8NCE	FR-A800-E	FR-A800 & FR-A8NC
Communication speed		1 Gbps	1 Gbps	100 Mbps	10 Mbps
Cable		Ethernet category 5e or higher	Ethernet category 5e or higher	Ethernet category 5 or higher	Dedicated cable
Number of connectable inverters		121 (sum of master and slave stations)	64	64 (open specification)*1	42 (maximum)
Cyclic communication		Compatible	Compatible	Compatible	Compatible
Number of links*2	RX	64	64	64	64
	RY	64	64	64	64
	RWr	128 (256 bytes)	128 (256 bytes)	32 (64 bytes)	32 (64 bytes)
	RWw	128 (256 bytes)	128 (256 bytes)	32 (64 bytes)	32 (64 bytes)
Combination with TCP/IP		Supported	Not supported	Supported	Not supported
Topology		Line, star, ring*3, line-star	Line, star, ring, line-star	Star	Bus

*1: The actual number of connectable inverters differs according to the setting of the master.
*2: The numbers of inverter's remote I/O devices and the addresses of inverter's remote registers are common between CC-Link and CC-Link IE Field Network Basic.
*3: Ring topology will be supported later.

(2) Other network communication

Communication option

- CC-Link, SSCNET III (/H), DeviceNet™, PROFIBUS-DPV0 are supported using a compatible communication option. Other Ethernet-based communication such as the CC-Link IE Field Network communication and the FL remote communication can be also supported.
- A function block (FB) programming for CC-Link communication is available for the MELSEC-Q/L series to create the inverter control sequence programs easily. (The FB library (collection of FB elements) can be downloaded from the Mitsubishi Electric FA Global Website.)
- The standard model with an RS-485 interface (Mitsubishi inverter protocol, MODBUS® RTU protocol) enables communication with other devices without using a communication option.

SYSTEM SUPPORT (ENVIRONMENT ADAPTABILITY)

Installation Anywhere

Compliant with a variety of standards, our extensive range of the FR-A800 series inverter covers various applications.

(1) Comprehensive noise countermeasures

Compliance with EU EMC Directive with inverter alone

Troublesome acquisition of standards is unnecessary.

- The FR-A800 series is equipped with an EMC filter as standard for compliance with EMC Directive with the inverter alone. (EN 61800-3 2nd Environment Category C3)
- The newly developed drive technology and the power supply technology minimize the EMI emitted from inverters.

	Capacitive filter (radio noise filter)	Input-side common mode choke (line noise filter)	DC reactor
55K or lower	Standard (built-in)	Standard (built-in)	Option (sold separately)
75K or higher	Standard (built-in)	Option (sold separately)	Option (sold separately)

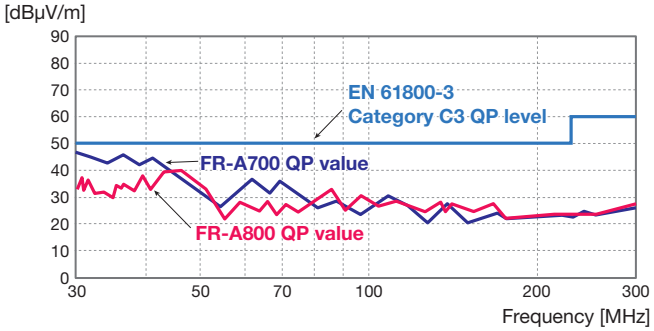

(2) Global compatibility

Compliance with a variety of standards

- Complies with UL, cUL, and EC Directives (CE marking), and the Radio Waves Act (South Korea) (KC marking). It is also certified as compliant with the Eurasian Conformity (EAC).
- The inverters are compliant with the EU RoHS Directive (Restriction of the Use of Certain Hazardous Substances in Electrical and Electronic Equipment), friendly to people and to the environment.
- For the 400 V class*1, compliance with various countries ship classifications allows use on ship equipment. (A noise filter is required for the FR-A840 inverter and the FR-CC2 converter unit, and a ferrite core is required for the FR-A846 inverter. (Refer to page 210.))

Certification body	
NK	(Nippon Kaiji Kyokai)
ABS	(American Bureau of Shipping)
BV	(Bureau Veritas)
LR	(Lloyd's Register of Shipping)
DNV GL	(DNV GL AS)
CCS	(China Classification Society)
KR	(Korean Register of Shipping)

*1: The IP55 compatible model with a built-in C3 filter is not compliant with the ship classification standards.

For details of the models compliant with global standards, contact your local sales office.

(3) Protected in hazardous environment

Circuit board coating

The inverters with PCB coating (IEC60721-3-3 3C2/3S2) and conductive plating are available for improved environmental resistance. ("-60" or "-06" is affixed to the end of the inverter model name.)

(4) Wire saving, space saving

Built-in brake transistor NEW

In addition to the 22K and lower, 400 V class 30 to 55K models have also been equipped with a built-in brake transistor. In an application where the motor is hardly decelerated, connecting a brake resistor can shorten the deceleration time; no brake unit or power regeneration converter is required. Wiring, space, and ultimately the cost will be all saved.

(5) Direct installation by the machine

IP55 compatible NEW

- Inverters can be installed nearby the machine, minimizing cable length between the inverter and motor.
- Support is available for use even in high-humidity or dusty environments, facilitating a more flexible choice of installation locations.
- By enclosing a DC reactor, it requires less wiring and less space.
- Compatible with cable glands to meet the IP55 specification at the wiring section.

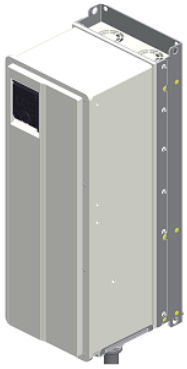

IP 5 5

- **First digit** (protection rating against solid objects)

IP rating	Description
Class 5	Protection against dust. No ingress of dust that may inhibit normal operation.

- **Second digit** (protection rating against water)

IP rating	Description
Class 5	Protection against water jets from all directions.

(6) Flexible configuration to meet the needs

Separate inverter and converter modules NEW

The inverter module and the converter module are physically separated for the 315K or higher capacity models.

Inverter module : FR-A842
Converter module : FR-CC2

This facilitates flexible support for a variety of systems such as common bus line (to be supported soon) and parallel operation. The fuse in the FR-A842 inverter eliminates the need of a fuse between terminals P/+ and N/-. These features allow the installation space to be minimized and costs to be reduced. The converter unit can be run with 12-phase rectifier power supply. Motors up to 1350 kW (LD rating) can be driven by the inverters with parallel operation function (FR-A842-P) and the converter units (FR-CC2-P).

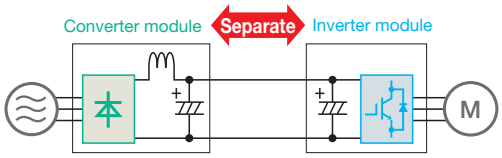

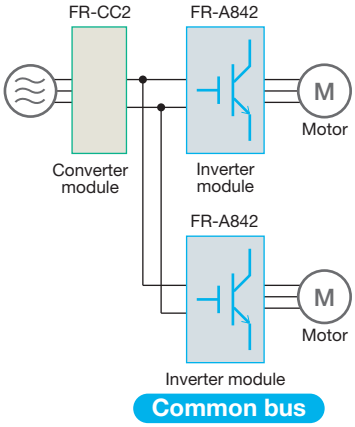

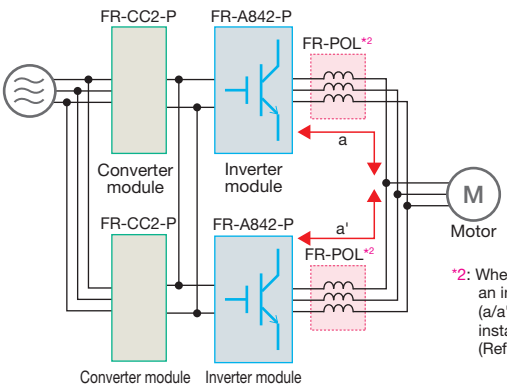

*2: When the cable length from an inverter to the node point (a/a') is less than 10 m, install the FR-POL. (Refer to page 193.)

Some functions from the standard inverter are limited or not available. (Refer to page 248.)

SYSTEM SUPPORT (FUNCTION)

High Equipment Functionality

Numerous functions and the extensive lineup of models are ready to support various systems.

(1) Turn spare inverters into converters

Changeover between inverter and high power factor converter NEW

Install the FR-A8AVP (option) in a separated converter type inverter to use it as a high power factor converter. To use the converter, the following options are needed: phase detection transformer box, dedicated filter reactor, dedicated reactor for PWM control, dedicated filter capacitor, inrush current limit resistor, etc.
They can be switched to a converter and back to an inverter again to match process requirements.
The converter is classified as the self-excitation three-phase bridge circuit, and achieves K5 (the conversion factor) = 0. The total harmonic distortion of the input current (THDi) is 5% or less*1, which facilitates compliance with the overseas standards related to harmonic suppression.

*1: When the input voltage is distorted, harmonic contents increase because power harmonics flow into the converter.

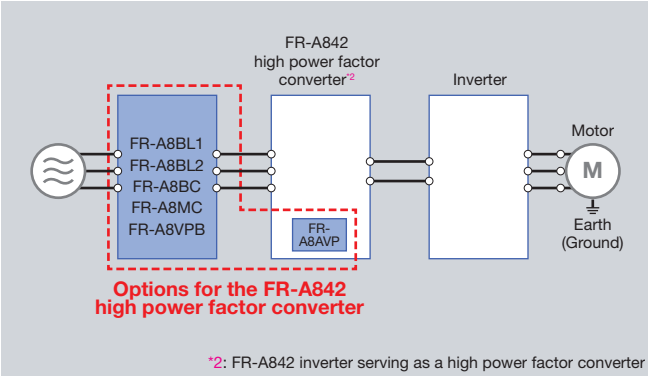

*2: FR-A842 inverter serving as a high power factor converter

(2) Reduce the shock caused by switching the power source

Phase-synchronized bypass switching (400 V class only) NEW

The FR-A8AVP (option) and the FR-A8VPB (option) make it possible to detect the phase of the commercial power supply. (For wiring details, refer to page 186.)
By synchronizing the inverter output with the phase of the commercial power supply, the spike in the motor current can be suppressed and shock reduced.
Furthermore, the time required for the switching is reduced, which is more beneficial for larger inverters.

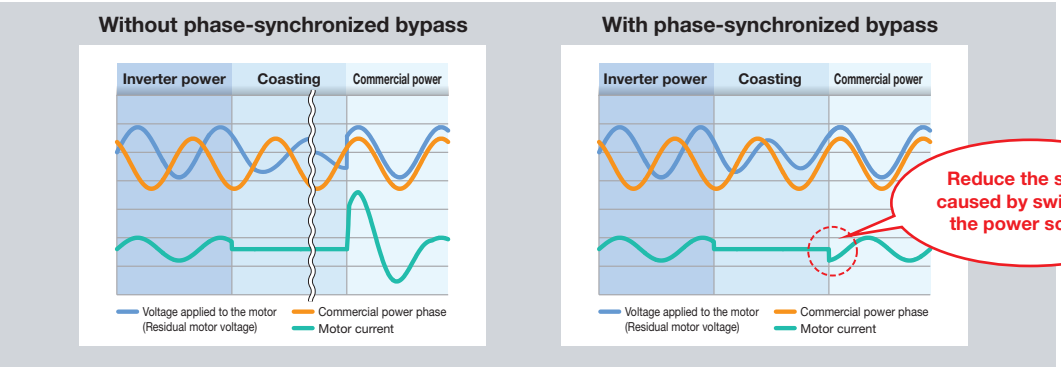

(3) Reduced tact time with functionality suited to the application

Anti-sway control NEW

When an object is moved by a crane, swinging at the time of stopping is suppressed on the crane's transverse axis or traveling axis. This control cuts down the tact time and facilitates efficient operation.

Increased magnetic excitation deceleration NEW

Deceleration time can be reduced without a brake resistor.
Tact time can be eliminated at conveyor lines, etc.

(4) Selection of optimum capacity to suit the application

Multiple rating NEW

Rated current and four different overload capacity ratings (SLD rating (super light duty), LD rating (light duty), ND rating (normal duty), HD rating (heavy duty)) can be selected with parameters. The optimum inverter can be selected to suit the application, and by selecting an inverter with SLD or LD rating, equipment size can be reduced when compared with the FR-A700 series. The HD rating is best suited for applications requiring low speed and high torque.
If using an inverter with capacity of 75K or higher, or motor with capacity of 75 kW or higher, always select and install the inverter based on the capacity of the motor with DC reactor.

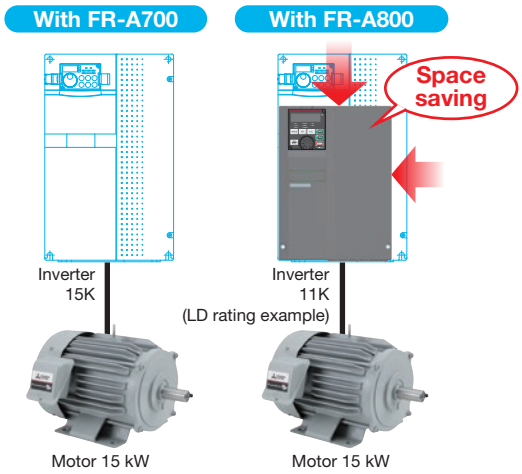

Rating	SLD	LD	ND	HD
	Super light duty	Light duty	Normal duty	Heavy duty
Application	Fan and Pump	Fan and Pump; Tunnel Boring Machines, Winding and Unwinding, Printing Machines; Conveyor	Fan and Pump; Cranes, Press; Conveyor	Fan and Pump; Cranes, Press; Conveyor
Pr.570 (E301) setting	0	1	2 (Initial value)	3
Overload current rating (inverse-time characteristics)	110% 60 s, 120% 3 s	120% 60 s, 150% 3 s	150% 60 s, 200% 3 s	200% 60 s, 250% 3 s
Surrounding air temperature	40°C	50°C	50°C	50°C

Refer to page 16 for the inverter rating selection.

(5) PLC control with an inverter

Built-in PLC function in an inverter NEW

- Parameters and setting frequency can be changed at the program.
- Inverter control such as inverter operations triggered by input signals, signal output based on inverter operation status, and monitor output can be freely customized based on the machine specifications.
- All machines can be controlled by the inverter alone, and control can also be dispersed.
- Time-based operation is possible by using in combination with the real-time clock function (optional LCD operation panel (FR-LU08)).
- The FR-A800-E enables communication between multiple inverters using the I/O devices and special registers of the PLC function, which can create a small-scale system by Ethernet using the inverter-to-inverter link function.

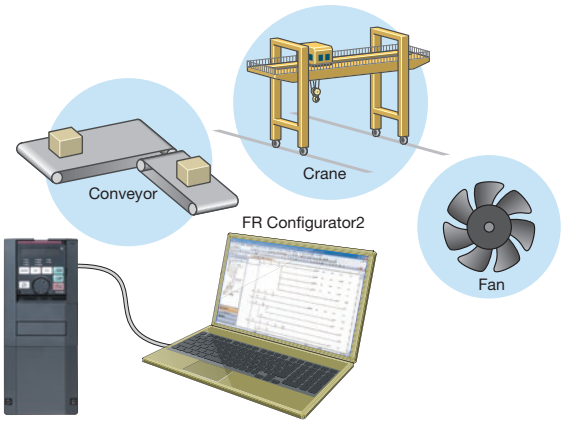

Refer to page 28 for the details.

Extensive lineup

For the details of the lineup, please contact your sales representative.

•Standard model

F R - A 8 [2] [0] - [0.4K] - [1] - [ ] [ ]

Symbol	Voltage class
2	200 V class
4	400 V class

Symbol	Structure, functionality
0	Standard model

Symbol[*1]	Description
0.4K to 280K	Inverter ND rated capacity (kW)

Symbol	Type[*2]	Communication type
1	FM	RS-485
2	CA	

Symbol	Circuit board coating (IEC60721-3-3 3C2/3S2 compatible)	Plated conductor
None	Without	Without
60	With	Without
06[*3]	With	With

Symbol	Function
None	Standard type
GF	With built-in CC-Link IE Field Network function
GN	CC-Link IE TSN communication function

F R - A 8 [2] [0] - [0.4K] - [E1] - [ ]

Symbol	Voltage class
2	200 V class
4	400 V class

Symbol	Structure, functionality
0	Standard model

Symbol[*1]	Description
0.4K to 280K	Inverter ND rated capacity (kW)

Symbol	Type[*2]	Communication type
E1	FM	Ethernet
E2	CA	

Symbol	Circuit board coating (IEC60721-3-3 3C2/3S2 compatible)	Plated conductor
None	Without	Without
60	With	Without
06[*3]	With	With

Three-phase 200V class FR-A820-□[*4]	0.4K	0.75K	1.5K	2.2K	3.7K	5.5K	7.5K	11K	15K	18.5K	22K	30K	37K	45K	55K	75K	90K
	00046	00077	00105	00167	00250	00340	00490	00630	00770	00930	01250	01540	01870	02330	03160	03800	04750
	●	●	●	●	●	●	●	●	●	●	●	●	●	●	●	●	●
Three-phase 400V class FR-A840-□[*4]	0.4K	0.75K	1.5K	2.2K	3.7K	5.5K	7.5K	11K	15K	18.5K	22K	30K	37K	45K	55K	75K	90K
	00023	00038	00052	00083	00126	00170	00250	00310	00380	00470	00620	00770	00930	01160	01800	02160	02600
	●	●	●	●	●	●	●	●	●	●	●	●	●	●	●	●	●
	110K	132K	160K	185K	220K	250K	280K										
	03250	03610	04320	04810	05470	06100	06830										
	●	●	●	●	●	●	●										

•IP55 compatible model

F R - A 8 [4] [6] - [7.5K] - [1] - [60] [C3]

Symbol	Voltage class
4	400 V class

Symbol	Structure, functionality
6	IP55 compatible model

Symbol[*1]	Description
0.4K to 132K	Inverter ND rated capacity (kW)

Symbol	Type[*2]	Communication type
1	FM	RS-485
2	CA	
E1	FM	Ethernet
E2	CA	

Symbol	Circuit board coating (IEC60721-3-3 3C2/3S2 compatible)	Plated conductor
60	With	Without
06	With	With

Symbol	EMC filter
C2	Built-in C2 filter
C3	Built-in C3 filter

Three-phase 400V class FR-A846-□ (with a built-in DC reactor)	0.4K	0.75K	1.5K	2.2K	3.7K	5.5K	7.5K	11K	15K	18.5K	22K	30K	37K	45K	55K	75K	90K
	00023	00038	00052	00083	00126	00170	00250	00310	00380	00470	00620	00770	00930	01160	01800	02160	02600
	●	●	●	●	●	●	●	●	●	●	●	●	●	●	●	●	●
	110K	132K															
	03250	03610															
	●	●															

•Separated converter type

[Inverter]

F R - A 8 4 2 - 315K - 1 - ☐ ☐

Symbol	Voltage class
4	400 V class

Symbol	Structure, functionality
2	Separated converter type

Symbol*1	Description
315K to 500K	Inverter ND rated capacity (kW)

Symbol	Type*2	Communication type
1	FM	RS-485
2	CA	

Symbol	Circuit board coating (IEC60721-3-3 3C2/3S2 compatible)	Plated conductor
None	Without	Without
60	With	Without
06	With	With

Symbol	Function
None	Standard type
GF	With built-in CC-Link IE Field Network function
P	Parallel operation
GN	CC-Link IE TSN communication function

F R - A 8 4 2 - 315K - E1 - ☐

Symbol	Voltage class
4	400 V class

Symbol	Structure, functionality
2	Separated converter type

Symbol*1	Description
315K to 500K	Inverter ND rated capacity (kW)

Symbol	Type*2	Communication type
E1	FM	Ethernet
E2	CA	

Symbol	Circuit board coating (IEC60721-3-3 3C2/3S2 compatible)	Plated conductor
None	Without	Without
60	With	Without
06	With	With

Three-phase 400V class FR-A842-☐ *3	315K	355K	400K	450K	500K
	07700	08660	09620	10940	12120
	●	●	●	●	●

[Converter unit]

F R - C C 2 - H 315K - 60 ☐

Symbol	Voltage class
H	400 V class

Symbol	Description
315K to 630K	Applicable motor capacity (kW)

Symbol	Circuit board coating (IEC60721-3-3 3C2/3S2 compatible)	Plated conductor
60	With	Without
06	With	With

Symbol	Function
None	Standard type
P	Parallel operation

Three-phase 400V class (with a built-in DC reactor)	315K	355K	400K	450K	500K	560K	630K
FR-CC2-H☐	●	●	●	●	●	●	●
FR-CC2-H☐-P	–	–	●	●	●	●	–

*1: Models can be alternatively indicated with the inverter rated current (SLD rating).
(For the FR-A842-P and the FR-A846, the current rating is LD or ND. However, the rated current used to represent the model is the SLD rated current of the standard model.)

*2: Specification differs by the type as follows.

Type	Monitor output	Initial setting			
		Built-in EMC filter	Control logic	Rated frequency	Pr.19 Base frequency voltage
FM (terminal FM equipped model)	Terminal FM (pulse train output) Terminal AM (analog voltage output (0 to ±10 VDC))	OFF	Sink logic	60 Hz	9999 (same as the power supply voltage)
CA (terminal CA equipped model)	Terminal CA (analog current output (0 to 20 mADC)) Terminal AM (analog voltage output (0 to ±10 VDC))	ON	Source logic	50 Hz	8888 (95% of the power supply voltage)

*3: Available for the 5.5K or higher.
*4: For using the 75K or higher inverter and a 75 kW or higher motor, always install a DC reactor (FR-HEL), which is available as an option.
*5: Always install the converter unit (FR-CC2(-P)). (Not required when a high power factor converter (FR-HC2) is used.)

●: Released model

Inverter by rating

•200 V class

Inverter model FR-A820-□		SLD (Super light duty)		LD (Light duty)		ND (Normal duty initial value)		HD (Heavy duty)	
		Motor capacity (kW)*1	Rated current (A)	Motor capacity (kW)*1	Rated current (A)	Motor capacity (kW)*1	Rated current (A)	Motor capacity (kW)*1	Rated current (A)
0.4K	00046	0.75	4.6	0.75	4.2	0.4	3	0.2	1.5
0.75K	00077	1.5	7.7	1.5	7	0.75	5	0.4	3
1.5K	00105	2.2	10.5	2.2	9.6	1.5	8	0.75	5
2.2K	00167	3.7	16.7	3.7	15.2	2.2	11	1.5	8
3.7K	00250	5.5	25	5.5	23	3.7	17.5	2.2	11
5.5K	00340	7.5	34	7.5	31	5.5	24	3.7	17.5
7.5K	00490	11	49	11	45	7.5	33	5.5	24
11K	00630	15	63	15	58	11	46	7.5	33
15K	00770	18.5	77	18.5	70.5	15	61	11	46
18.5K	00930	22	93	22	85	18.5	76	15	61
22K	01250	30	125	30	114	22	90	18.5	76
30K	01540	37	154	37	140	30	115	22	90
37K	01870	45	187	45	170	37	145	30	115
45K	02330	55	233	55	212	45	175	37	145
55K	03160	75	316	75	288	55	215	45	175
75K	03800	90/110	380	90	346	75	288	55	215
90K	04750	132	475	110	432	90	346	75	288

•400 V class

Inverter model FR-A84□-□		SLD (Super light duty)		LD (Light duty)		ND (Normal duty initial value)		HD (Heavy duty)	
		Motor capacity (kW)*1	Rated current (A)	Motor capacity (kW)*1	Rated current (A)	Motor capacity (kW)*1	Rated current (A)	Motor capacity (kW)*1	Rated current (A)
0.4K	00023	0.75	2.3	0.75	2.1	0.4	1.5	0.2	0.8
0.75K	00038	1.5	3.8	1.5	3.5	0.75	2.5	0.4	1.5
1.5K	00052	2.2	5.2	2.2	4.8	1.5	4	0.75	2.5
2.2K	00083	3.7	8.3	3.7	7.6	2.2	6	1.5	4
3.7K	00126	5.5	12.6	5.5	11.5	3.7	9	2.2	6
5.5K	00170	7.5	17	7.5	16	5.5	12	3.7	9
7.5K	00250	11	25	11	23	7.5	17	5.5	12
11K	00310	15	31	15	29	11	23	7.5	17
15K	00380	18.5	38	18.5	35	15	31	11	23
18.5K	00470	22	47	22	43	18.5	38	15	31
22K	00620	30	62	30	57	22	44	18.5	38
30K	00770	37	77	37	70	30	57	22	44
37K	00930	45	93	45	85	37	71	30	57
45K	01160	55	116	55	106	45	86	37	71
55K	01800	75/90	180	75	144	55	110	45	86
75K	02160	110	216	90	180	75	144	55	110
90K	02600	132	260	110	216	90	180	75	144
110K	03250	160	325	132	260	110	216	90	180
132K	03610	185	361	160	325	132	260	110	216
160K	04320	220	432	185	361	160	325	132	260
185K	04810	250	481	220	432	185	361	160	325
220K	05470	280	547	250	481	220	432	185	361
250K	06100	315	610	280	547	250	481	220	432
280K	06830	355	683	315	610	280	547	250	481
315K	07700	400	770	355	683	315	610	280	547
355K	08660	450	866	400	770	355	683	315	610
400K	09620	500	962	450	866	400	770	355	683
450K	10940	560	1094	500	962	450	866	400	770
500K	12120	630	1212	560	1094	500	962	450	866

•Overload current rating

SLD	110% 60 s, 120% 3 s (inverse-time characteristics) at surrounding air temperature of 40°C
LD	120% 60 s, 150% 3 s (inverse-time characteristics) at surrounding air temperature of 50°C
ND	150% 60 s, 200% 3 s (inverse-time characteristics) at surrounding air temperature of 50°C
HD	200% 60 s, 250% 3 s (inverse-time characteristics) at surrounding air temperature of 50°C

*1: The applicable motor capacity is the maximum applicable capacity of a Mitsubishi Electric 4-pole standard motor.

For selection of the DC reactor and the converter unit, refer to page 223.

Dedicated inverter for specialized field

FR-A800 Plus Series

FR-A800-CRN

- **Reduction in tact time**
  Specialized functions such as anti-sway control facilitate efficient operation.
- **Load slippage prevention**
  Optimum brake operation is obtained. It is possible to detect the slippage at a start of operation.
- **Dedicated monitoring functions**
  Overload detection and start time counting are possible.
- **Easier maintenance**
  Protection against vibration, dust and dirt, or corrosion is also available.

A800 Plus

A800 Plus

A new lineup of dedicated inverters for specialized fields are born!

Plus! The optimum functions for each dedicated field are added to the already high performance and high functionality FR-A800 series inverter.

FR-A800-R2R

- **System simplification**
  Winding/unwinding can be stabilized by the inverter alone.
- **Easy startup and adjustment**
  Parameters can be used for mechanical adjustment according to applications.
- **Wide range of applications**
  The inverter offers four types of control functions which enables the use in various system applications such as winding/unwinding in the wire drawing machines and printers.

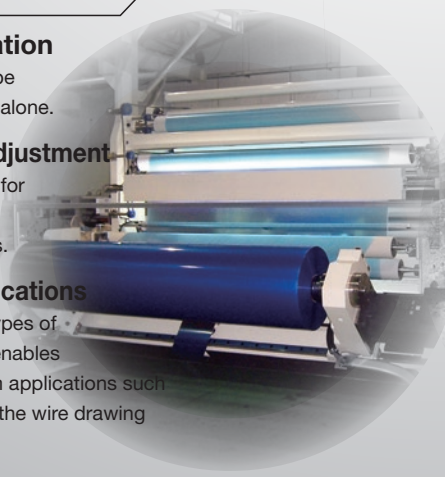

FR-A800-LC

- **Effective solution for downsizing of the enclosure**
  Liquid cooling enables installation of the cooling system outside of the enclosure.
- **Dedicated monitoring functions**
  The coolant flow is monitored for quick detection of system faults.

Dedicated inverter for specialized field

FR-A800 Plus Series

Pursuing optimum functions to meet our customers' needs

A lineup of dedicated inverters for specialized fields are offered.

Plus! The optimum functions for each dedicated field are added to the already high performance and high functionality FR-A800 series inverter.

Optimum functions for cranes

FR-A800-CRN

The inverter has various functions ideal for a crane application such as reduction in tact time, load slippage prevention, etc.

Reduction in tact time

By using the Mitsubishi Electric's original anti-sway control technology, the swinging of an object moved by a crane is suppressed at the time of stopping, even without operator's input adjustment. This control cuts down the tact time and facilitates efficient operation.

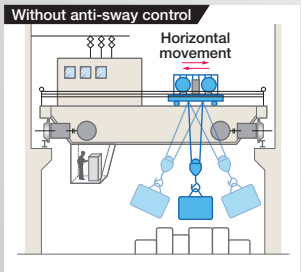

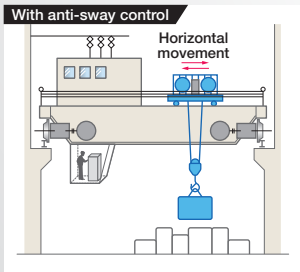

Load slippage prevention

- The highly scalable brake sequence function enables the output of a brake opening signal for the optimum brake operation calculated from the load torque or the speed.
- Slippage during the start of a lift can be checked. (A speed detector such as an encoder is required.)

Dedicated monitoring functions

- A signal can be output when too much load is applied.
- The inverter starting times can be counted to determine the timing of the maintenance.

Easier maintenance

- A strong vibration may occur in some operating conditions, for example, during the crane traveling. Inverters with enhanced vibration resistance are available. They have components fixed to the circuit board with adhesive and wires that are tied in place with cable ties.
- Using the inverter in a dusty environment may cause faults such as a short circuit. Inverters with circuit board coating (conforming to IEC 60721-3-3 3C2/3S2) and plated conductors are available for improved environmental resistance.

Model

F R - A 8 [2] [0] - [0.4K] - [1] - [60] [CRN]

Symbol	Voltage class
2	200 V class
4	400 V class

Symbol	Structure, functionality
0	Standard model*4
2	Separated converter type

Capacity*1	Description
0.4K to 500K	Inverter ND rated capacity (kW)

Symbol	Type	Communication type
1	FM	RS-485
2	CA*2	
E1	FM	Ethernet
E2	CA*2	

Symbol	Circuit board coating (IEC60721-3-3 3C2/3S2 compatible)	Plated conductor
60	With	Without
06*3		With
61		Without
16*3		With

Symbol	Dedicated function
CRN	Crane dedicated model

Inverter model	Inverter capacity
FR-A820	0.4kW to 90kW
FR-A840	0.4kW to 280kW
FR-A842	315kW to 500kW

*1: Models can be alternatively indicated with the inverter rated current (SLD rating).

*2: For the CA type, the monitor output terminal F/C operates as terminal CA (analog current output: 0 to 20 mADC), not as terminal FM (pulse train output).

*3: Available for the 5.5K or higher.

*4: For the 75K or higher inverter, or whenever a 75 kW or higher motor is used, always connect a DC reactor (FR-HEL), which is available as an option.

Optimum functions for roll to roll applications

FR-A800-R2R

The inverter can be used in a wide variety of systems with various dedicated functions. High productivity can be achieved by stable tension control.

System simplification

The FR-A800-R2R inverter has various dedicated functions such as winding diameter calculation, providing stable winding/unwinding control independently.

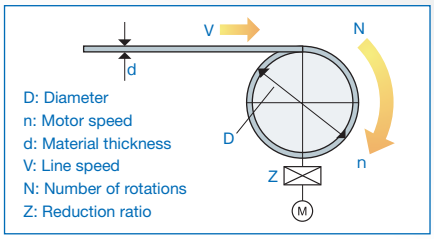

Easy startup and adjustment

- Mechanical adjustment according to applications can be achieved just by setting parameters, which enables the startup and adjustment work of the system by the inverter alone.
- Tension PI gain tuning: By automatically adjusting the tension PI gain for PID control, the time required for adjustment is significantly cut down.

Wide range of applications

The inverter offers four types of control functions which enables the use in various system applications such as winding/unwinding in the wire drawing machines and printers.

- Dancer feedback speed control
- Tension sensor feedback speed control
- Tension sensorless torque control
- Tension sensor feedback torque control

Model

F R - A 8 [2] [0] - [0.4K] - [1] - [ ] [R2R]

Symbol	Voltage class
2	200 V class
4	400 V class

Symbol	Structure, functionality
0	Standard model*4
2	Separated converter type

Capacity*4	Description
0.4K to 500K	Inverter ND rated capacity (kW)

Symbol	Type	Communication type
1	FM	RS-485
2	CA*2	
E1	FM	Ethernet
E2	CA*2	

Symbol	Circuit board coating (IEC60721-3-3 3C2/3S2 compatible)	Plated conductor
None	Without	Without
60	With	
06*3		With

Symbol	Dedicated function
R2R	Roll to roll dedicated model

Inverter model	Inverter capacity
FR-A820	0.4kW to 90kW
FR-A840	0.4kW to 280kW
FR-A842	315kW to 500kW

*1: Models can be alternatively indicated with the inverter rated current (SLD rating).
*2: For the CA type, the monitor output terminal F/C operates as terminal CA (analog current output: 0 to 20 mADC), not as terminal FM (pulse train output).
*3: Available for the 5.5K or higher.
*4: For the 75K or higher inverter, or whenever a 75 kW or higher motor is used, always connect a DC reactor (FR-HEL), which is available as an option.

Liquid Cooled Type Inverter

FR-A800-LC

Coolant is used for cooling the inside of the inverter. Liquid cooling enables the use of inverters for tunnel boring machines or chillers in the environments where heat is difficult to be dissipated.

Effective solution for downsizing of the enclosure

A smaller enclosure can be used since the quantity of the heat dissipated in the enclosure is reduced.

Dedicated monitoring functions

A sensor (flow switch) is attached at the inlet of coolant to send a signal to the inverter. When the coolant flow rate decreases, a warning is output, enabling quick, direct detection of system faults.

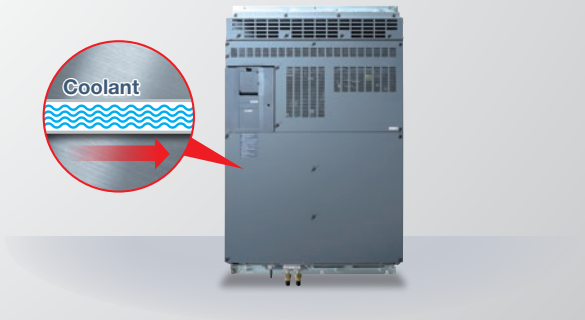

Model

F R - A 8 [4] 0 - [280K] - [1] - [ ] [LC]

Symbol	Voltage class
4	400 V class

Symbol	Description
110K to 280K	Inverter ND rated capacity (kW)
03250 to 06830	Inverter rated current (SLD rated current of the standard FR-A800 inverter) (A)

Symbol	Type	Communication type
1	FM	RS-485
2	CA*1	
E1	FM	Ethernet
E2	CA*1	

Symbol	Circuit board coating (IEC60721-3-3 3C2/3S2 compatible)	Plated conductor
None	Without	Without
60	With	
06		With

Symbol	Function
LC	Liquid cooled type

*1: For the CA type, the monitor output terminal F/C operates as terminal CA (analog current output: 0 to 20 mADC), not as terminal FM (pulse train output).

Application example

BEST SUITED FOR EVERY MACHINE

Line Control (Winding and Unwinding)

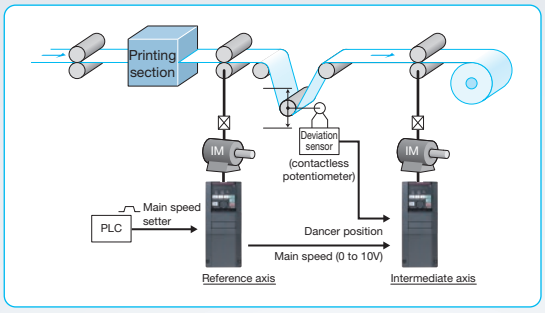

Point

Material tension is kept constant by employing speed control and torque control to eliminate slack and uneven winding. By using a motor with the speed ratio most appropriate for the machine, the inverter capacity can be downsized.

Typical industries

- Textile industry
- Steel industry
- Pulp, paper, paper products manufacturing industries

Dancer control NEW

The dancer control detects the dancer roll positions and performs PID operation to keep the sheet tension constant.

Traverse function NEW

The traverse function, used for the traverse axis of spinning machine, prevents uneven winding or collapsing.

Torque accuracy

	Real sensorless vector control	Vector control
Torque control range	1 : 20	1 : 50
Absolute torque accuracy*1	±20%	±10%*3
Repetitive torque accuracy*2	±10%	±5%*3

*1: Difference between the actual torque and the torque command
*2: Fluctuation between the average of the actual torque and the actual measured torque (repeatability of the torque)
*3: When online auto tuning (adaptive magnetic flux observer) enabled

Cranes

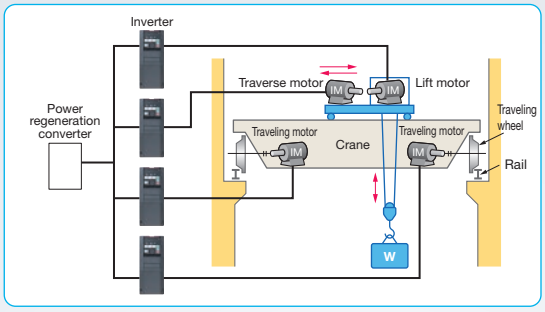

Point

Relentless operation is possible with HD rating when lifting. And when traveling, vibrations applied to objects being conveyed are suppressed with anti-sway control, facilitating efficient operation.

Typical industries

- Lumber, wood product manufacturing industries
- Steel industry
- Warehousing
- Water transportation
- Textile industry
- Metal products manufacturing

High torque at low speed

[Starting torque]
- Real sensorless vector control 200% (ND rating)
- Vector control 200% (ND rating)
  (150% of initial setting for the 5.5K and higher)

[Zero-speed torque]
- Vector control: 200% (Select HD rating.)

PLC function NEW

By employing synchronous operation for gate-type cranes, positional displacement of both axes is corrected during travel, achieving highly accurate control without using an external controller.

Anti-sway control NEW

When an object is moved by a crane, swinging at the time of stopping is suppressed on the crane's transverse axis or traveling axis.
This control cuts down the tact time and facilitates efficient operation.

Tunnel Boring Machines

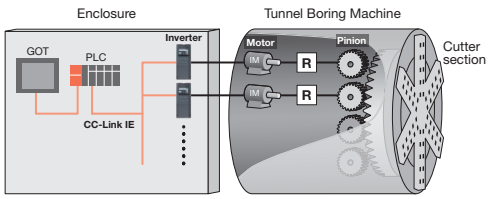

Point

Inverters can be used to provide high starting torque for digging, and for transferring earth and sand after digging. A lineup of products compatible with the IP55 protective structure is available as a separate series.

Typical industries

Construction industry

Real sensorless vector control

Motors are controlled without encoders, which are susceptible to hazardous environment. Use of such motors naturally provides higher reliability. Torque accuracy has also improved because the temperature is better controlled.

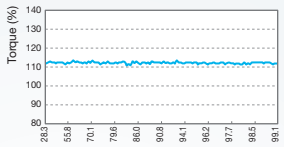

Temperature/torque characteristics

Droop control

This function balances the load between motors when using multiple inverters.

CC-Link IE communication

CC-Link IE communication enables a programmable controller or a GOT to control multiple inverters. By using Ethernet cables, less wiring is required.

Machine Tools

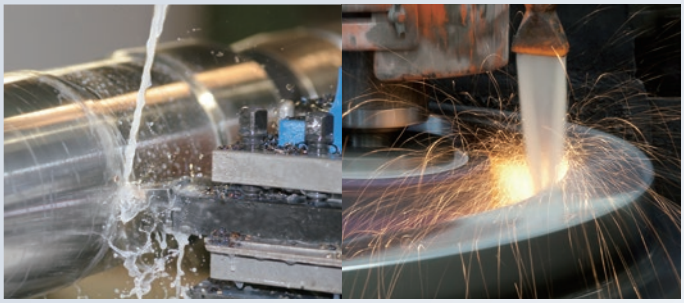

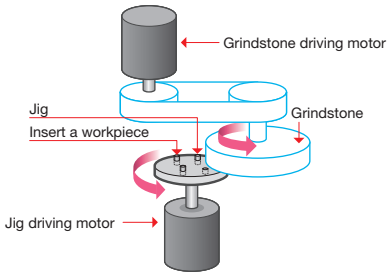

Point

The rotation speed can be set according to the material being processed. Stable high-speed rotation is also possible.

Typical industries

Metal products manufacturing

High-speed operation

[Operating frequency]
- V/F control 590 Hz
- Vector control 400 Hz
- Real sensorless vector control 400 Hz

Torque limit function

This is effective in preventing machine damage (tool damage prevention, etc.) due to sudden disturbance torque.

Orientation control (vector control)

The inverter can adjust the stop position (Orientation control) using an encoder attached to a place such as the main shaft of the machine.

Application example

BEST SUITED FOR EVERY MACHINE

Wood Processing Machines

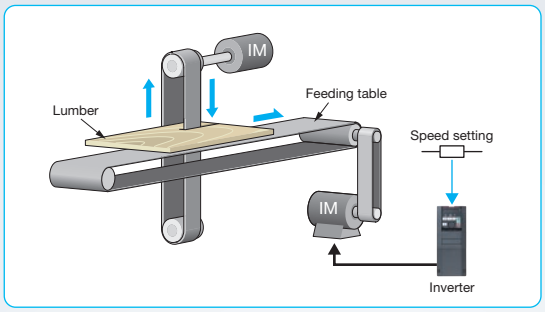

Point

Even when processing areas of varying hardness such as lumber knots, processing time delays are suppressed by minimizing reductions in motor speed.

Typical industries

Lumber, wood product manufacturing industries	Forestry

Real sensorless vector control, vector control

Improved speed response to sudden load fluctuations when compared with the previous model (FR-A700).

[Response speed]

- Real sensorless vector control 50 Hz*1 (A700: 20 Hz)
- Vector control 130 Hz (A700: 50 Hz)

*1: At 3.7 kW with no load. Differs depending on the load conditions and motor capacity.

Torque limiting function

This function is effective in preventing machine damage (tool damage, etc.) due to sudden disturbance torque.

Conveyance

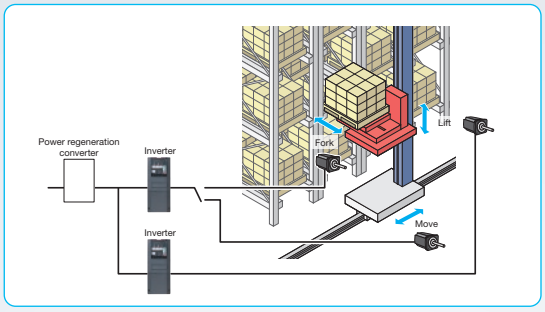

Point

The new series offers a wealth of functionality suited to applications such as high-accuracy conveyance and target position stoppage, which contributes to reduction in tact time.

Typical industries

Steel industry	Metal products manufacturing
Lumber, wood product manufacturing industries	Textile industry
Water transportation, fishing industry	Warehousing

PM sensorless vector control

Multiple axes are strictly controlled to run at the same speed without using a driving belt. This control method provides driving accurate enough for transporting glass substrates without damaging them. Simple positioning control is also available.

(when high frequency superposition control selected in combination with MM-CF)

Increased magnetic excitation deceleration NEW

Deceleration time can be reduced without a brake resistor.
Tact time can be eliminated at conveyor lines, etc.

PLC function NEW

When a few sensors are used to check the presence of goods on a conveyor and the arrival of such goods, the inverter can directly receive such signals from the sensors for the PLC control.

Printing Machines

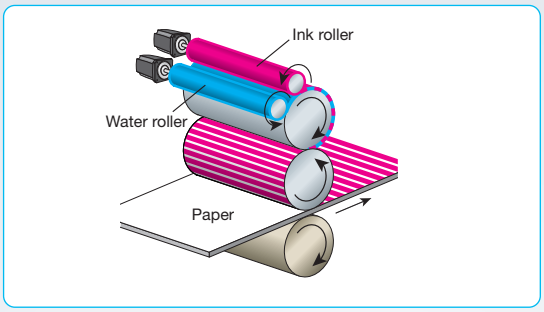

Point

The highly-accurate speed control minimizes color unevenness and displaced prints.

Typical industries

Printing and related industries

Speed control

	Real sensorless vector control	Vector control	PM sensorless vector control
Speed response	50 Hz*1	130 Hz	50 Hz
Speed control range	1:200 (when power drive at 0.3 Hz to 60 Hz)	1:1500 (both driving/ regeneration*2)	1:1000*3 (when HD rating selected)

*1: At 3.7 kW with no load. Differs depending on the load conditions and motor capacity.
*2: If using regeneration unit (option) during regeneration
*3: When high frequency superposition control selected in combination with the MM-CF

PM sensorless vector control

The speed fluctuations of the ink roller axis and water roller axis are minimized to eliminate print unevenness.

[Speed fluctuation ratio] ±0.05% (Digital input)
"No encoder" means less trouble and higher reliability.

Compressors

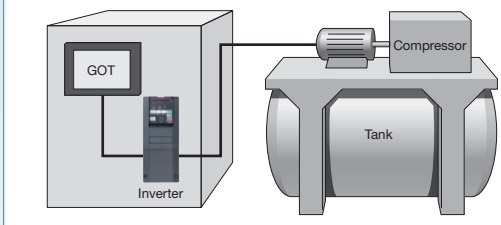

Point

The PM sensorless vector control is useful in generating high starting torque. By using this control method with an IPM motor, much power can be saved. This small motor also makes the machine small.

Typical industries

- Steel industry
- Metal products manufacturing
- Lumber, wood product manufacturing industries
- Textile industry
- Water transportation, fishing industry
- Warehousing

PM sensorless vector control

Smooth operation is possible even at start-up under high load.

[Starting torque] 1.5 kW or lower: 200%, 2.0 kW or higher: 150%
When high frequency superposition control selected in combination with MM-CF

PID control

Pressure can be automatically adjusted by converting signals from the encoder to inverter input signals and feeding them back.

Parallel operation function NEW

Even a large compressor can be operated by FR-A842-P inverters with parallel operation function, which can operate a 630 kW or higher motor.

CONTRIBUTION TO FACTORY AUTOMATION

The PLC function will help you to provide the control sequence best suited for the machine specifications.

1 Inverter operation sequence customized for the machine

•A set of operations (operation at different signal inputs, signal and monitor outputs at different inverter status, etc.) can be freely programmed in accordance with the machine specifications. For example, a shutter opening/closing can be performed based on a signal from a sensor, or based on the opening/closing times.
Control programs can be created in sequence ladders using the inverter setup software (FR Configurator2).

2 Realizes the decentralized control

•The control of the whole system is decentralized to inverters that mange their subordinating devices individually.

•A group of dedicated sequence programs is created and saved in each inverter. The master controller no longer has to process all the sequence programs, and the decentralized system accepts program changes more flexibly.

3 Automatic operation in accordance with the time

•With the real-time clock, automatic operation can be performed at certain times (when the optional LCD operation panel (FR-LU08) is used).

4 Useful functions

• User parameter
Up to 50 parameters, which are linked with the data registers, can be saved. The variables (data registers) used in the PLC function can be saved as inverter parameters. Furthermore, parameter settings can be saved in the EEPROM of inverter. When results of calculation using the PLC function are saved in the parameters, the data can be retained after the power is turned OFF.

• User initiated fault
Inverter output can be shut off under conditions other than those of the existing protective functions. Up to five specific fault-initiating conditions can be set to activate a protective function and shut off the inverter output.

• Monitored item for the user
Special register values can be displayed for monitoring on the operation panel. Arbitrary data designated by the user such as results of calculation using the PLC function can be displayed.

• Inverter parameter read/write
Parameter settings can be changed using sequence programs. The acceleration/deceleration patterns can also be set with sequence programs to be changed at certain operation statuses. You can choose RAM or EEPROM to save the parameter settings. When the settings are changed frequently, choose RAM.

• PID function
Two different loops of PID inverter operations can be pre-set, and those can be controlled using sequence programs.

• Inverter operation lock
The inverter operation can be restricted for the command sources other than the sequence programs.

PLC function

Item	Description
I/O	
General-purpose I/O	Sequence programs enable I/O signal transmission to/from the inverter and its plug-in options.
Analog I/O	Sequence programs enable reading of analog input values or analog output transmission by the inverter, and analog output transmission to the plug-in options.
Pulse train I/O	Sequence programs enable pulse train inputs (to terminal JOG) and pulse train outputs (from terminal F/C(FM)).
Inverter parameter read/write	Sequence programs enable inverter parameter write/read.
User parameter	Fifty user parameters (Pr.1150 to Pr.1199) are available and are linked with the data registers D206 to D255, which accept direct access by sequence programs.
CC-Link	A plug-in option (FR-A8NC) enables handling of remote registers as arbitrary data in the sequence programs.
Special function	
PID operation	Inverter's PID operations can be set (up to two loops).
User initiated fault	Up to five fault-initiating conditions can be set to activate a protective function.
Fault clear	The protective function occurring in the inverter can be reset.
Inverter operation lock	Inverters can start up while the PLC function is running.
Monitored item for the user	Desired data is displayable on the operation panel.

Application example

Crane control

Point

The traveled distance (total number of travel pulses) of each wheel is directly read from the encoder installed at the wheel. The pulses from the two wheels are then compared, and their speed is adjusted to synchronize the wheel positions. There is no need to use an external controller to offset speed, allowing high accuracy control.

User initiated fault

Up to five protective functions operating under specific conditions can be set. Protective functions can be triggered to block inverter output at such times as when positional displacements are not eliminated even after offsetting speed over a fixed period of time, or pulses from the PLGs on both wheels are not input.

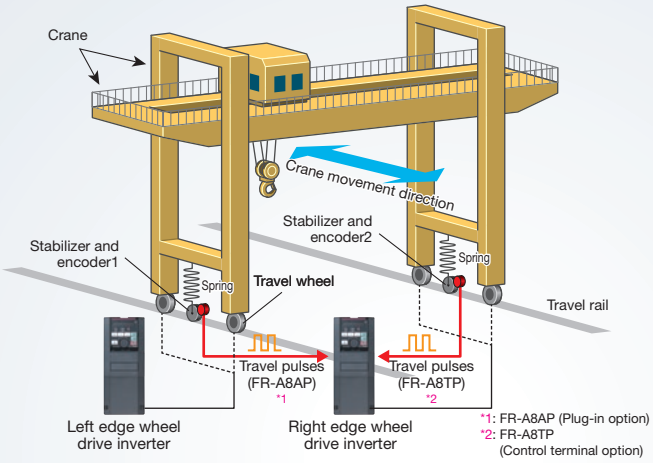

Conveyor control

Point

The workpiece positions detected by sensors are directly reported to the inverter, and the inverter sends out the operation commands to the conveyor robot and to the extruding machine. Whole control can be performed by an inverter, in accordance with the movement of its peripheral equipment.

Inverter parameter read/write

Changes can be made to inverter parameters from the sequence program. The acceleration/deceleration time and pattern can be set based on the type of workpiece.

Inverter operation lock

Operation is possible only when the sequence function is enabled. Changes to settings caused by operator error can be avoided.

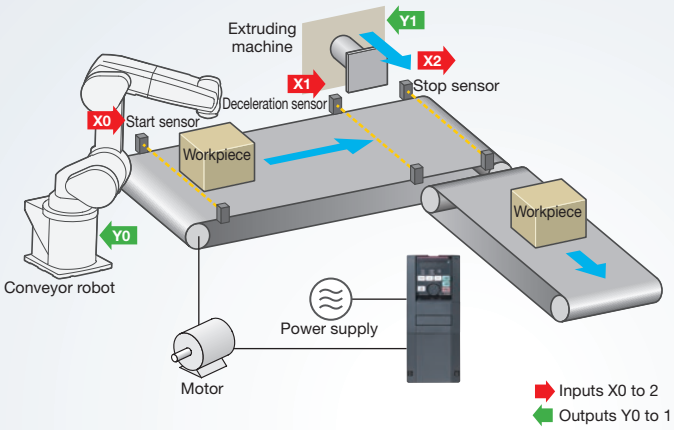

Fan control

Point

Signals sent via the enclosure (relay panel, etc.) such as input magnetic contactor signals, watt hour meter signals, and sensor signals can be read directly into the inverter and controlled. A fan can be controlled in accordance with the conditions without using relays, etc.
Furthermore, by using an external 24 VDC power source for the control power supply, input machine signals can be turned ON and OFF regardless of whether there is an input power source. And by employing an external 24 VDC power supply for the control power, input machine signals can be turned ON and OFF, regardless of the existence of a main circuit power supply.

CC-Link

A plug-in option (FR-A8NC) enables handling of remote registers as arbitrary data in the sequence programs.
A variety of equipment inside the factory can be centrally controlled with a CC-Link Network.

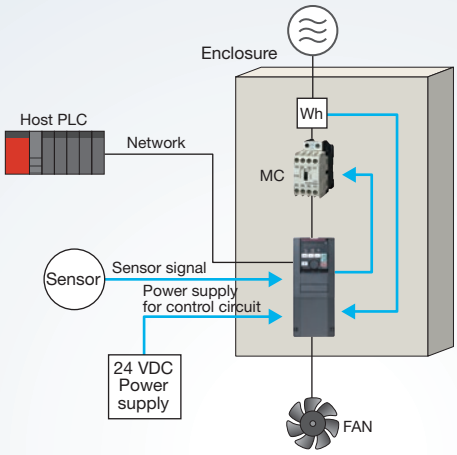

FR Configurator2 (SW1DND-FRC2)

DELIVERING A COMFORTABLE INVERTER OP

From inverter startup to maintenance, this versatile software allows the user to specify settings easily at the computer.

[Compatible operating systems]
Windows® 10, Windows® 8.1/Pro/Enterprise, Windows® 8, Windows® 7, (32-bit, 64-bit), Windows Vista® (32-bit)

Easy connection with a USB cable

A USB connector (Mini-B connector) is provided as standard. Easy connection to the computer without the need for a converter.

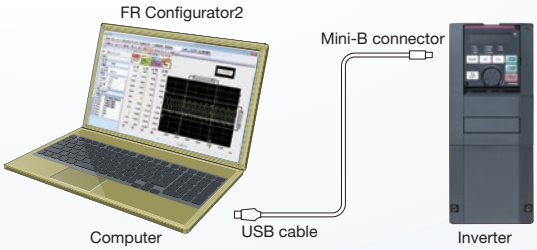

Intuitive user interface

Connected inverters are displayed in tree view format. Windows for each function can be accessed by changing the tab for maximum efficiency.

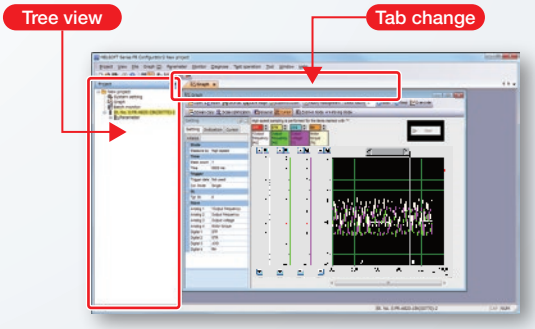

Work can be carried out away from the equipment using a USB memory device

By loading trace data and parameter settings copied to a USB memory device into FR Configurator2, analysis and adjustments can be carried out with ease away from the equipment.

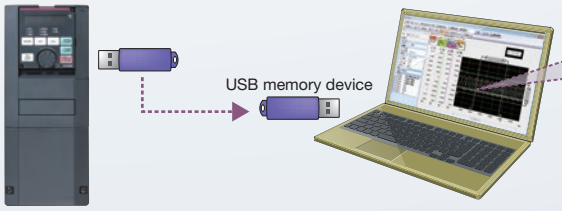

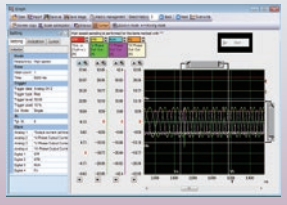

Graph function

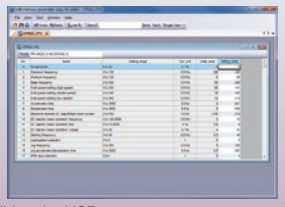

Editing the USB memory parameter copy file

Sequence control (Developer function)

The Developer function is used for creating sequence programs and writing them to the inverter to enable the use of the PLC function of the inverter.

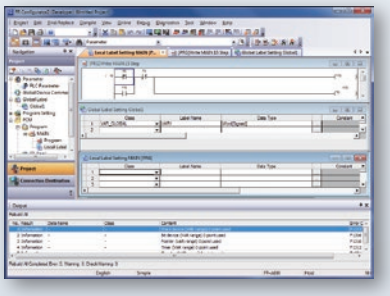

Free trial version Supported

The function with the marking above is available in the free trial version (usable free of charge with limited functions). It can be downloaded at Mitsubishi Electric FA Global Website.

Function	Free trial version
Parameter list	○
Diagnosis	○
Graph	×
Batch monitor	×
Test operation	○
I/O terminal monitor	×
Convert	○

Function	Free trial version
Developer	×
USB memory parameter copy file edit	×
Ethernet parameter setting	○
iQSS backup file conversion	○
Help	○

○: Available, ×: Not available

A full functional trial version, which has the same functionality as the release version, is also offered for a limited period of 20 days.

OPERATING ENVIRONMENT

1 Efficient startup settings

System settings

Free trial version Supported

This sets the method used to connect the inverters and the computer. Automatic recognition of connected inverters can also be set. The station number, model, capacity, and plug-in options of the connected inverters can also be set manually.

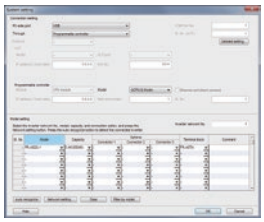

Test operation

Free trial version Supported

Operating commands, frequency settings, and the operating mode can be set for the selected inverter.

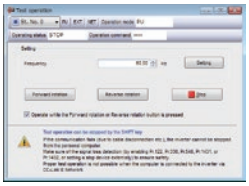

Conversion function

Free trial version Supported

Parameters can be set with the parameter auto conversion function when renewing from the FR-A700 series or FR-A500 series.

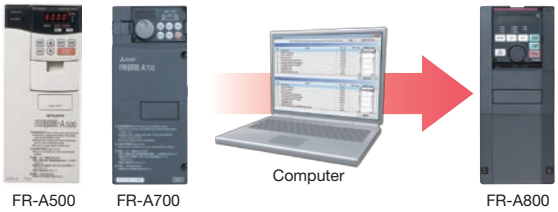

2 Perform pre-operation adjustments and checks during operation with ease

Parameter list

Free trial version Supported

Parameters for selected station numbers can be displayed and changed.

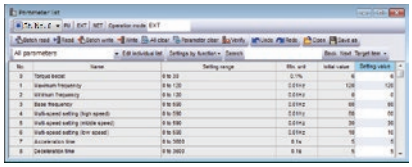

I/O signals can be assigned using settings by function.

Offline auto tuning

Tuning is performed in wizard format after specifying necessary parameter settings.

Batch monitor function

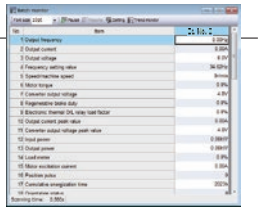

Multiple inverter monitor items can be monitored simultaneously.

With a terminal monitor, the ON/OFF status can be monitored.

USB memory parameter copy file edit

Parameter settings (USB memory device parameter copy file) read from the inverter to a USB memory device can be edited. With the iQSS backup file conversion function, the files in the backup/restore format generated by the GOT can be converted and edited.

3 Easy-to-follow platform facilitates easy maintenance

Diagnosis (fault history)

Free trial version Supported

Inverter fault history can be read and displayed together with the alarm occurrence time.
Activating faults can be displayed, and inverters can also be reset.

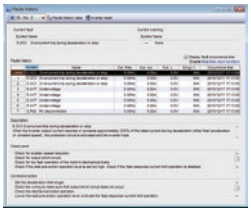

Graph function

Inverter data can be sampled and displayed in a graphical format.
Trace data can also be read and displayed in a graph.

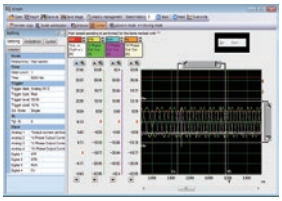

Help

Free trial version Supported

Displays the content of inverter and software Instruction Manuals.

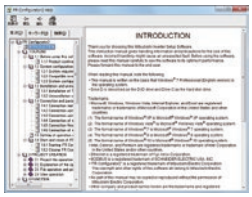

Life diagnosis

Free trial version Supported

Life information read from the inverter is displayed.
Check marks appear in the life alarm fields of inverter parts that have exceeded their replacement schedule.
Diagnosis results can also be output to a file.

Connection Example

Connection example for standard models

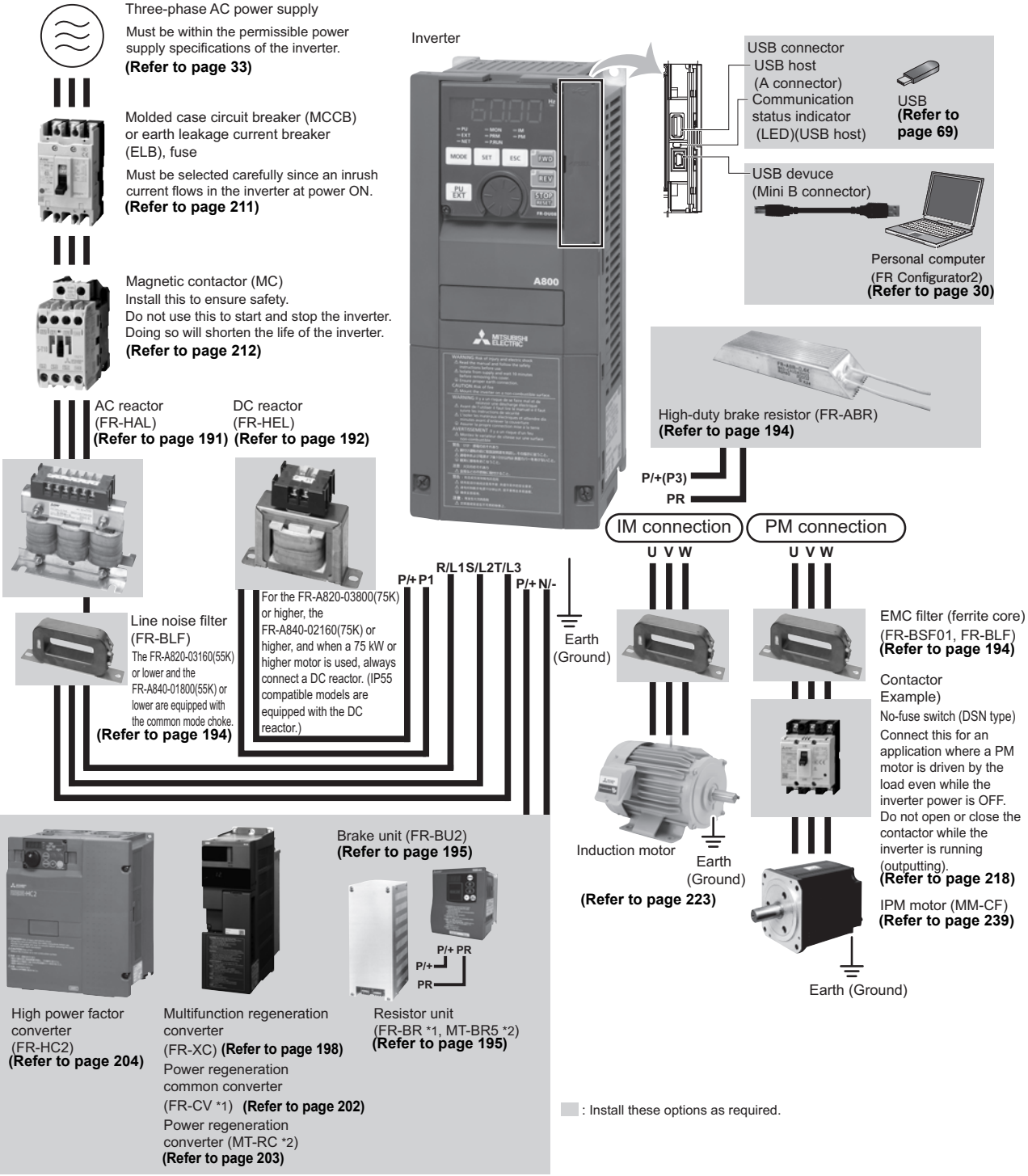

*1 Compatible with the FR-A820-03160(55K) or lower / FR-A840-01800(55K) or lower.
*2 Compatible with the FR-A820-03800(75K) or higher / FR-A840-02160(75K) or higher.

Rating (Standard model)

◆ 200 V class

Model FR-A820-[ ](-E)(-GF)(-GN)				00046	00077	00105	00167	00250	00340	00490	00630	00770	00930	01250	01540	01870	02330	03160	03800	04750
				0.4K	0.75K	1.5K	2.2K	3.7K	5.5K	7.5K	11K	15K	18.5K	22K	30K	37K	45K	55K	75K	90K
Applicable motor capacity (kW) *1		SLD		0.75	1.5	2.2	3.7	5.5	7.5	11	15	18.5	22	30	37	45	55	75	90/110	132
		LD		0.75	1.5	2.2	3.7	5.5	7.5	11	15	18.5	22	30	37	45	55	75	90	110
		ND (initial setting)		0.4	0.75	1.5	2.2	3.7	5.5	7.5	11	15	18.5	22	30	37	45	55	75	90
		HD		0.2 *2	0.4	0.75	1.5	2.2	3.7	5.5	7.5	11	15	18.5	22	30	37	45	55	75
Output	Rated capacity (kVA) *3	SLD		1.8	2.9	4	6.4	10	13	19	24	29	35	48	59	71	89	120	145	181
		LD		1.6	2.7	3.7	5.8	8.8	12	17	22	27	32	43	53	65	81	110	132	165
		ND (initial setting)		1.1	1.9	3	4.2	6.7	9.1	13	18	23	29	34	44	55	67	82	110	132
		HD		0.6	1.1	1.9	3	4.2	6.7	9.1	13	18	23	29	34	44	55	67	82	110
	Rated current (A)	SLD		4.6	7.7	10.5	16.7	25	34	49	63	77	93	125	154	187	233	316	380	475
		LD		4.2	7	9.6	15.2	23	31	45	58	70.5	85	114	140	170	212	288	346	432
		ND (initial setting)		3	5	8	11	17.5	24	33	46	61	76	90	115	145	175	215	288	346
		HD		1.5	3	5	8	11	17.5	24	33	46	61	76	90	115	145	175	215	288
	Overload current rating *4	SLD		110% 60 s, 120% 3 s (inverse-time characteristics) at surrounding air temperature of 40°C																
		LD		120% 60 s, 150% 3 s (inverse-time characteristics) at surrounding air temperature of 50°C																
		ND (initial setting)		150% 60 s, 200% 3 s (inverse-time characteristics) at surrounding air temperature of 50°C																
		HD		200% 60 s, 250% 3 s (inverse-time characteristics) at surrounding air temperature of 50°C																
	Rated voltage *5			Three-phase 200 to 240 V																
	Regenerative braking	Brake transistor		Built-in											FR-BU2 (Option)					
		Maximum brake torque *7		150% torque/3%ED *6			100% torque/3%ED *6		100% torque/2%ED *6		20% torque/continuous								10% torque/continuous	
		FR-ABR (when the option is used)		150% torque/10%ED		100% torque/10%ED					100% torque/6%ED				—	—	—	—	—	—
Power supply	Rated input AC voltage/frequency			Three-phase 200 to 240 V 50 Hz/60 Hz																
	Permissible AC voltage fluctuation			170 to 264 V 50 Hz/60 Hz																
	Permissible frequency fluctuation			±5%																
	Rated input current (A) *8	Without DC reactor	SLD	5.3	8.9	13.2	19.7	31.3	45.1	62.8	80.6	96.7	115	151	185	221	269	—	—	—
			LD	5	8.3	12.2	18.3	28.5	41.6	58.2	74.8	90.9	106	139	178	207	255	—	—	—
			ND (initial setting)	3.9	6.3	10.6	14.1	22.6	33.4	44.2	60.9	80	96.3	113	150	181	216	266	—	—
			HD	2.3	3.9	6.3	10.6	14.1	22.6	33.4	44.2	60.9	80	96.3	113	150	181	216	—	—
		With DC reactor	SLD	4.6	7.7	10.5	16.7	25	34	49	63	77	93	125	154	187	233	316	380	475
			LD	4.2	7	9.6	15.2	23	31	45	58	70.5	85	114	140	170	212	288	346	432
			ND (initial setting)	3	5	8	11	17.5	24	33	46	61	76	90	115	145	175	215	288	346
			HD	1.5	3	5	8	11	17.5	24	33	46	61	76	90	115	145	175	215	288
	Power supply capacity (kVA) *9	Without DC reactor	SLD	2	3.4	5	7.5	12	17	24	31	37	44	58	70	84	103	—	—	—
			LD	1.9	3.2	4.7	7	11	16	22	29	35	41	53	68	79	97	—	—	—
			ND (initial setting)	1.5	2.4	4	5.4	8.6	13	17	23	30	37	43	57	69	82	101	—	—
			HD	0.9	1.5	2.4	4	5.4	8.6	13	17	23	30	37	43	57	69	82	—	—
		With DC reactor	SLD	1.8	2.9	4	6.4	10	13	19	24	29	35	48	59	71	89	120	145	181
			LD	1.6	2.7	3.7	5.8	8.8	12	17	22	27	32	43	53	65	81	110	132	165
			ND (initial setting)	1.1	1.9	3	4.2	6.7	9.1	13	18	23	29	34	44	55	67	82	110	132
			HD	0.6	1.1	1.9	3	4.2	6.7	9.1	13	18	23	29	34	44	55	67	82	110
Protective structure (IEC 60529) *10				Enclose type (IP20)											Open type (IP00)					
Cooling system				Self-cooling		Forced air cooling														
Approx. mass (kg)				2.0	2.2	3.4	3.4	3.4	6.7	6.7	8.3	15.5	15.5	15.5	22	42	42	54	74	74

*1 The applicable motor capacity indicated is the maximum capacity applicable for use of the Mitsubishi Electric 4-pole standard motor.
*2 The 0.2 kW motor capacity is applicable under V/F control only.
*3 The rated output capacity indicated assumes that the output voltage is 220 V for 200 V class.
*4 The % value of the overload current rating indicated is the ratio of the overload current to the inverter's rated output current. For repeated duty, allow time for the inverter and motor to return to or below the temperatures under 100% load.
*5 The maximum output voltage does not exceed the power supply voltage. The maximum output voltage can be changed within the setting range. However, the maximum point of the voltage waveform at the inverter output side is the power supply voltage multiplied by about $\sqrt{2}$.
*6 Value for the built-in brake resistor
*7 Value for the ND rating
*8 The rated input current indicates a value at a rated output voltage. The impedance at the power supply side (including those of the input reactor and cables) affects the rated input current.
*9 The power supply capacity is the value when at the rated output current. It varies by the impedance at the power supply side (including those of the input reactor and cables).
*10 FR-DU08: IP40 (except for the PU connector section)

◆ 400 V class

Model FR-A840-[ ](-E)(-GF)(-GN)				00023	00038	00052	00083	00126	00170	00250	00310	00380	00470	00620	00770	00930	01160	01800	02160	02600	03250	03610	04320	04810	05470	06100	06830
				0.4K	0.75K	1.5K	2.2K	3.7K	5.5K	7.5K	11K	15K	18.5K	22K	30K	37K	45K	55K	75K	90K	110K	132K	160K	185K	220K	250K	280K
Applicable motor capacity (kW) *1			SLD	0.75	1.5	2.2	3.7	5.5	7.5	11	15	18.5	22	30	37	45	55	75/90	110	132	160	185	220	250	280	315	355
			LD	0.75	1.5	2.2	3.7	5.5	7.5	11	15	18.5	22	30	37	45	55	75	90	110	132	160	185	220	250	280	315
			ND (initial setting)	0.4	0.75	1.5	2.2	3.7	5.5	7.5	11	15	18.5	22	30	37	45	55	75	90	110	132	160	185	220	250	280
			HD	0.2*2	0.4	0.75	1.5	2.2	3.7	5.5	7.5	11	15	18.5	22	30	37	45	55	75	90	110	132	160	185	220	250
Output	Rated capacity (kVA) *3		SLD	1.8	2.9	4	6.3	10	13	19	24	29	36	47	59	71	88	137	165	198	248	275	329	367	417	465	521
			LD	1.6	2.7	3.7	5.8	8.8	12	18	22	27	33	43	53	65	81	110	137	165	198	248	275	329	367	417	465
			ND (initial setting)	1.1	1.9	3	4.6	6.9	9.1	13	18	24	29	34	43	54	66	84	110	137	165	198	248	275	329	367	417
			HD	0.6	1.1	1.9	3	4.6	6.9	9.1	13	18	24	29	34	43	54	66	84	110	137	165	198	248	275	329	367
	Rated current (A)		SLD	2.3	3.8	5.2	8.3	12.6	17	25	31	38	47	62	77	93	116	180	216	260	325	361	432	481	547	610	683
			LD	2.1	3.5	4.8	7.6	11.5	16	23	29	35	43	57	70	85	106	144	180	216	260	325	361	432	481	547	610
			ND (initial setting)	1.5	2.5	4	6	9	12	17	23	31	38	44	57	71	86	110	144	180	216	260	325	361	432	481	547
			HD	0.8	1.5	2.5	4	6	9	12	17	23	31	38	44	57	71	86	110	144	180	216	260	325	361	432	481
	Overload current rating *4		SLD	110% 60 s, 120% 3 s (inverse-time characteristics) at surrounding air temperature of 40°C																							
			LD	120% 60 s, 150% 3 s (inverse-time characteristics) at surrounding air temperature of 50°C																							
			ND (initial setting)	150% 60 s, 200% 3 s (inverse-time characteristics) at surrounding air temperature of 50°C																							
			HD	200% 60 s, 250% 3 s (inverse-time characteristics) at surrounding air temperature of 50°C																							
	Rated voltage *5			Three-phase 380 to 500 V																							
	Regenerative braking	Brake transistor		Built-in															FR-BU2(Option)								
		Maximum brake torque *7		100% torque/2%ED *6							20% torque/continuous								10% torque/continuous								
		FR-ABR (when the option is used)		100% torque/10%ED							100% torque/6%ED				— *12				—	—	—	—	—	—	—	—	—
Power supply	Rated input AC voltage/frequency			Three-phase 380 to 500 V 50 Hz/60 Hz *11																							
	Permissible AC voltage fluctuation			323 to 550 V 50 Hz/60 Hz																							
	Permissible frequency fluctuation			±5%																							
	Rated input current (A) *8	Without DC reactor	SLD	3.2	5.4	7.8	10.9	16.4	22.5	31.7	40.3	48.2	58.4	76.8	97.6	115	141	—	—	—	—	—	—	—	—	—	—
			LD	3	4.9	7.3	10.1	15.1	22.3	31	38.2	44.9	53.9	75.1	89.7	106	130	—	—	—	—	—	—	—	—	—	—
			ND (initial setting)	2.3	3.7	6.2	8.3	12.3	17.4	22.5	31	40.3	48.2	56.5	75.1	91	108	134	—	—	—	—	—	—	—	—	—
			HD	1.4	2.3	3.7	6.2	8.3	12.3	17.4	22.5	31	40.3	48.2	56.5	75.1	91	108	—	—	—	—	—	—	—	—	—
		With DC reactor	SLD	2.3	3.8	5.2	8.3	12.6	17	25	31	38	47	62	77	93	116	180	216	260	325	361	432	481	547	610	683
			LD	2.1	3.5	4.8	7.6	11.5	16	23	29	35	43	57	70	85	106	144	180	216	260	325	361	432	481	547	610
			ND (initial setting)	1.5	2.5	4	6	9	12	17	23	31	38	44	57	71	86	110	144	180	216	260	325	361	432	481	547
			HD	0.8	1.5	2.5	4	6	9	12	17	23	31	38	44	57	71	86	110	144	180	216	260	325	361	432	481
	Power supply capacity (kVA) *9	Without DC reactor	SLD	2.5	4.1	5.9	8.3	12	17	24	31	37	44	59	74	88	107	—	—	—	—	—	—	—	—	—	—
			LD	2.3	3.7	5.5	7.7	12	17	24	29	34	41	57	68	81	99	—	—	—	—	—	—	—	—	—	—
			ND (initial setting)	1.7	2.8	4.7	6.3	9.4	13	17	24	31	37	43	57	69	83	102	—	—	—	—	—	—	—	—	—
			HD	1.1	1.7	2.8	4.7	6.3	9.4	13	17	24	31	37	43	57	69	83	—	—	—	—	—	—	—	—	—
		With DC reactor	SLD	1.8	2.9	4	6.3	10	13	19	24	29	36	47	59	71	88	137	165	198	248	275	329	367	417	465	521
			LD	1.6	2.7	3.7	5.8	8.8	12	18	22	27	33	43	53	65	81	110	137	165	198	248	275	329	367	417	465
			ND (initial setting)	1.1	1.9	3	4.6	6.9	9.1	13	18	24	29	34	43	54	66	84	110	137	165	198	248	275	329	367	417
			HD	0.6	1.1	1.9	3	4.6	6.9	9.1	13	18	24	29	34	43	54	66	84	110	137	165	198	248	275	329	367
Protective structure (IEC 60529) *10				Enclose type (IP20)											Open type (IP00)												
Cooling system				Self-cooling			Forced air cooling																				
Approx. mass (kg)				3.0	3.0	3.0	3.4	3.4	6.7	6.7	8.3	8.3	15	15	23	41	41	43	52	55	71	78	117	117	166	166	166

*1 The applicable motor capacity indicated is the maximum capacity applicable for use of the Mitsubishi Electric 4-pole standard motor.
*2 The 0.2 kW motor capacity is applicable under V/F control only.
*3 The rated output capacity indicated assumes that the output voltage is 440 V for 400 V class.
*4 The % value of the overload current rating indicated is the ratio of the overload current to the inverter's rated output current. For repeated duty, allow time for the inverter and motor to return to or below the temperatures under 100% load.
*5 The maximum output voltage does not exceed the power supply voltage. The maximum output voltage can be changed within the setting range. However, the maximum point of the voltage waveform at the inverter output side is the power supply voltage multiplied by about $\sqrt{2}$.
*6 Value for the built-in brake resistor
*7 Value for the ND rating
*8 The rated input current indicates a value at a rated output voltage. The impedance at the power supply side (including those of the input reactor and cables) affects the rated input current.
*9 The power supply capacity is the value when at the rated output current. It varies by the impedance at the power supply side (including those of the input reactor and cables).
*10 FR-DU08: IP40 (except for the PU connector section)
*11 For the power voltage exceeding 480 V, set **Pr.977 Input voltage mode selection**. (For details, refer to).
*12 The regenerative braking capability of the inverter can be improved with a commercial brake resistor. For the details, please contact your sales representative.

● Rating (Separated converter types)

◆ 400 V class (Standard type)

• Inverter

Model FR-A842-[ ](-E)(-GF)(-GN)			07700	08660	09620	10940	12120
			315K	355K	400K	450K	500K
Applicable motor capacity (kW) *1		SLD	400	450	500	560	630
		LD	355	400	450	500	560
		ND (initial setting)	315	355	400	450	500
		HD	280	315	355	400	450
Output	Rated capacity (kVA) *2	SLD	587	660	733	834	924
		LD	521	587	660	733	834
		ND (initial setting)	465	521	587	660	733
		HD	417	465	521	587	660
	Rated current (A)	SLD	770	866	962	1094	1212
		LD	683	770	866	962	1094
		ND (initial setting)	610	683	770	866	962
		HD	547	610	683	770	866
	Overload current rating *3	SLD	110% 60 s, 120% 3 s (inverse-time characteristics) at surrounding air temperature of 40°C				
		LD	120% 60 s, 150% 3 s (inverse-time characteristics) at surrounding air temperature of 50°C				
		ND (initial setting)	150% 60 s, 200% 3 s (inverse-time characteristics) at surrounding air temperature of 50°C				
		HD	200% 60 s, 250% 3 s (inverse-time characteristics) at surrounding air temperature of 50°C				
	Rated voltage *4		Three-phase 380 to 500 V				
	Regenerative braking torque *5 (When the converter unit (FR-CC2) is used)	Maximum brake torque	10% torque/continuous				
Input power	DC power supply voltage		430 to 780 VDC				
	Control power supply auxiliary input		Single phase 380 to 500 V 50 Hz/60 Hz *7				
	Permissible control power supply auxiliary input fluctuation		Frequency ±5%, voltage ±10%				
Protective structure (IEC 60529) *6			Open type (IP00)				
Cooling system			Forced air cooling				
Approx. mass (kg)			163	163	243	243	243

*1 The applicable motor capacity indicated is the maximum capacity applicable for use of the Mitsubishi Electric 4-pole standard motor.
*2 The rated output capacity indicated assumes that the output voltage is 440 V.
*3 The % value of the overload current rating indicated is the ratio of the overload current to the inverter's rated output current. For repeated duty, allow time for the inverter and motor to return to or below the temperatures under 100% load.
*4 The maximum output voltage does not exceed the power supply voltage. The maximum output voltage can be changed within the setting range. However, the maximum point of the voltage waveform at the inverter output side is the power supply voltage multiplied by about $\sqrt{2}$.
*5 ND rating reference value
*6 FR-DU08: IP40 (except for the PU connector section)
*7 For the power voltage exceeding 480 V, set **Pr.977 Input voltage mode selection**.

• Converter unit (FR-CC2)

Model FR-CC2-H[ ]		315K	355K	400K	450K	500K	560K	630K
Applicable motor capacity (kW)		315	355	400	450	500	560	630
Output	Overload current rating *1	200% 60 s, 250% 3 s				150% 60 s, 200% 3 s	120% 60 s, 150% 3 s	110% 60 s, 120% 3 s
	Rated voltage *2	430 to 780 VDC *4						
Power supply	Rated input AC voltage/frequency	Three-phase 380 to 500 V 50 Hz/60 Hz						
	Permissible AC voltage fluctuation	Three-phase 323 to 550 V 50 Hz/60 Hz						
	Permissible frequency fluctuation	±5%						
	Rated input current (A)	610	683	770	866	962	1094	1212
	Power supply capacity (kVA) *3	465	521	587	660	733	833	924
Protective structure (IEC 60529)		Open type (IP00)						
Cooling system		Forced air cooling						
DC reactor		Built-in						
Approx. mass (kg)		210	213	282	285	288	293	294

*1 The % value of the overload current rating indicated is the ratio of the overload current to the inverter's rated output current. For repeated duty, allow time for the converter unit and the inverter to return to or below the temperatures under 100% load.
*2 The converter unit output voltage varies according to the input power supply voltage and the load. The maximum point of the voltage waveform at the converter unit output side is approximately the power supply voltage multiplied by $\sqrt{2}$.
*3 The power supply capacity is the value when at the rated output current. It varies by the impedance at the power supply side (including those of the input reactor and cables).
*4 The permissible voltage imbalance ratio is 3% or less. (Imbalance ratio = (highest voltage between lines - average voltage between three lines) / average voltage between three lines × 100)

◆ 400 V class (parallel operation function compatible model)

- Inverter

Model FR-A842-[ ]-P			Two in parallel			Three in parallel		
			400K	450K	500K	400K	450K	500K
			09620	10940	12120	09620	10940	12120
Applicable motor capacity (kW)		LD	710	800	900	1065	1200	1350
		ND (initial setting)	630	710	800	945	1065	1200
Output	Rated capacity (kVA) *1	LD	1056	1173	1334	1584	1759	2002
		ND (initial setting)	939	1056	1173	1409	1584	1759
	Rated current (A) *2	LD	1386	1539	1750	2078	2309	2626
		ND (initial setting)	1232	1386	1539	1848	2078	2309
	Overload current rating *3	LD	120% 60 s, 150% 3 s (inverse-time characteristics) at surrounding air temperature of 50°C					
		ND (initial setting)	150% 60 s, 200% 3 s (inverse-time characteristics) at surrounding air temperature of 50°C					
	Rated voltage *4		Three-phase 380 to 500 V					
	Regenerative braking torque *5 (When the converter unit is used)	Maximum brake torque	10% torque/continuous					
Input power	DC power supply voltage		430 to 780 VDC					
	Control power supply auxiliary input		Single phase 380 to 500 V 50/60 Hz *6					
	Permissible control power supply auxiliary input fluctuation		Frequency ±5%, voltage ±10%					
Protective structure (IEC 60529) *7			Open type (IP00)					
Cooling system			Forced air cooling					
Approx. mass (kg) *8			486	486	486	729	729	729

*1 The rated output capacity indicated assumes that the output voltage is 440 V.
*2 Total output current of the inverters operated in parallel.
*3 The % value of the overload current rating indicated is the ratio of the overload current to the inverter's rated output current. For repeated duty, allow time for the inverter and motor to return to or below the temperatures under 100% load.
*4 The maximum output voltage does not exceed the power supply voltage. The maximum output voltage can be changed within the setting range. However, the maximum point of the voltage waveform at the inverter output side is the power supply voltage multiplied by about $\sqrt{2}$.
*5 ND rating reference value.
*6 For the power voltage exceeding 480 V, set **Pr.977 Input voltage mode selection**.
*7 FR-DU08: IP40 (except for the PU connector section)
*8 Total mass of the inverters operated in parallel.

- Converter unit (FR-CC2)

Model FR-CC2-H[]-P		Two in parallel				Three in parallel			
		400K	450K	500K	560K	400K	450K	500K	560K
Applicable motor capacity (kW)		630	710	800	900	945	1065	1200	1350
Output	Overload current rating *1	150% 60 s, 200% 3 s							
	Rated voltage *2	430 to 780 VDC *3							
Power supply	Rated input AC voltage/frequency	Three-phase 380 to 500 V 50/60 Hz							
	Permissible AC voltage fluctuation	Three-phase 323 to 550 V 50/60 Hz							
	Permissible frequency fluctuation	±5%							
	Rated input current (A) *4	1232	1386	1539	1750	1848	2078	2309	2626
	Power supply capacity (kVA) *5	939	1056	1173	1334	1409	1584	1759	2002
Protective structure (IEC 60529)		Open type (IP00)							
Cooling system		Forced air cooling							
DC reactor		Built-in							
Approx. mass (kg) *6		564	570	576	586	846	855	864	879

*1 The % value of the overload current rating indicated is the ratio of the overload current to the inverter's rated output current. For repeated duty, allow time for the converter unit and the inverter to return to or below the temperatures under 100% load.
*2 The converter unit output voltage varies according to the input power supply voltage and the load. The maximum point of the voltage waveform at the converter unit output side is approximately the power supply voltage multiplied by $\sqrt{2}$.
*3 The permissible voltage imbalance ratio is 3% or less. (Imbalance ratio = (highest voltage between lines - average voltage between three lines) / average voltage between three lines × 100)
*4 The input current is the total current of the master and slave converter units during the parallel operation.
*5 The power supply capacity is the value when at the rated output current. It varies by the impedance at the power supply side (including those of the input reactor and cables).
*6 The mass is the total mass of the master and slave converter units during the parallel operation.

● Rating (IP55 compatible model)

◆ 400 V class

Model FR-A846-[ ](-E)			00023	00038	00052	00083	00126	00170	00250	00310	00380	00470	00620	00770	00930	01160	01800	02160	02600	03250	03610
			0.4K	0.75K	1.5K	2.2K	3.7K	5.5K	7.5K	11K	15K	18.5K	22K	30K	37K	45K	55K	75K	90K	110K	132K
Applicable motor capacity (kW) *1		LD	0.75	1.5	2.2	3.7	5.5	7.5	11	15	18.5	22	30	37	45	55	75	90	110	132	160
		ND (initial setting)	0.4	0.75	1.5	2.2	3.7	5.5	7.5	11	15	18.5	22	30	37	45	55	75	90	110	132
Output	Rated capacity (kVA) *2	LD	1.6	2.7	3.7	5.8	8.8	12	18	22	27	33	43	53	65	81	110	137	165	198	248
		ND (initial setting)	1.1	1.9	3	4.6	6.9	9.1	13	18	24	29	34	43	54	66	84	110	137	165	198
	Rated current (A)	LD	2.1	3.5	4.8	7.6	11.5	16	23	29	35	43	57	70	85	106	144	180	216	260	325
		ND (initial setting)	1.5	2.5	4	6	9	12	17	23	31	38	44	57	71	86	110	144	180	216	260
	Overload current rating *3	LD	120% 60 s, 150% 3 s (inverse-time characteristics) at surrounding air temperature of 40°C																		
		ND (initial setting)	150% 60 s, 200% 3 s (inverse-time characteristics) at surrounding air temperature of 40°C																		
	Rated voltage *4		Three-phase 380 to 500 V																		
	Regenerative braking	Maximum brake torque *5	10% torque/continuous																		
Power supply	Rated input AC voltage/frequency		Three-phase 380 to 500 V 50 Hz/60 Hz *8																		
	Permissible AC voltage fluctuation		323 to 550 V 50 Hz/60 Hz																		
	Permissible frequency fluctuation		±5%																		
	Rated input current (A) *6	LD	2.1	3.5	4.8	7.6	11.5	16	23	29	35	43	57	70	85	106	144	180	216	260	325
		ND (initial setting)	1.5	2.5	4	6	9	12	17	23	31	38	44	57	71	86	110	144	180	216	260
	Power supply capacity (kVA) *7	LD	1.6	2.7	3.7	5.8	9	12	18	22	27	33	43	53	65	81	110	137	165	198	248
		ND (initial setting)	1.1	1.9	3	4.6	6.9	9	13	18	24	29	34	43	54	66	102	110	137	165	198
Protective structure		IEC 60529	Dust- and water-proof type (IP55) *10																		
		UL50	UL Type12 *9																		
Cooling system			Self cooling + internal fan						Forced-air-cooling + internal fan												
DC reactor			Built-in																		
Approx. mass (kg)			15	15	15	15	16	17	26	26	27	27	59	60	63	64	147	150	153	189	193

*1 The applicable motor capacity indicated is the maximum capacity applicable for use of the Mitsubishi Electric 4-pole standard motor.

*2 The rated output capacity indicated assumes that the output voltage is 440 V.

*3 The % value of the overload current rating indicated is the ratio of the overload current to the inverter's rated output current. For repeated duty, allow time for the inverter and motor to return to or below the temperatures under 100% load.

*4 The maximum output voltage does not exceed the power supply voltage. The maximum output voltage can be changed within the setting range. However, the maximum point of the voltage waveform at the inverter output side is the power supply voltage multiplied by about $\sqrt{2}$.

*5 Value for the ND rating.

*6 The rated input current indicates a value at a rated output voltage. The impedance at the power supply side (including those of the input reactor and cables) affects the rated input current.

*7 The power supply capacity is the value when at the rated output current. It varies by the impedance at the power supply side (including those of the input reactor and cables).

*8 For the power voltage exceeding 480 V, set **Pr.977 Input voltage mode selection**.

*9 UL Type 12 Enclosure-Suitable for Installation in a Compartment Handling Conditioned Air (Plenum)

*10 For compliance with IP55, remove the protective bushes and install the recommended cable glands.

Common specifications (Standard type)

Control specifications	Control method		Soft-PWM control, high carrier frequency PWM control (selectable among V/F control, Advanced magnetic flux vector control, Real sensorless vector control, Optimum excitation control), vector control*1, and PM sensorless vector control
	Output frequency range		0.2 to 590 Hz (The upper-limit frequency is 400 Hz under Advanced magnetic flux vector control, Real sensorless vector control, vector control*1, and PM sensorless vector control.)
	Frequency setting resolution	Analog input	0.015 Hz/60 Hz (0 to 10 V/12 bits for terminals 2 and 4) 0.03 Hz/60 Hz (0 to 5 V/11 bits or 0 to 20 mA/approx. 11 bits for terminals 2 and 4, 0 to ±10 V/12 bits for terminal 1) 0.06 Hz/60 Hz (0 to ±5 V/11 bits for terminal 1)
		Digital input	0.01 Hz
	Frequency accuracy	Analog input	Within ±0.2% of the max. output frequency (25°C ± 10°C)
		Digital input	Within 0.01% of the set output frequency
	Voltage/frequency characteristics		Base frequency can be set from 0 to 590 Hz. Constant-torque/variable-torque pattern or adjustable 5 points V/F can be selected.
	Starting torque *2		SLD Rating:120% 0.3 Hz, LD Rating:150% 0.3 Hz, ND Rating:200% 0.3 Hz*3, HD Rating:250% 0.3 Hz*3 (Real sensorless vector control, vector control*1)
	Torque boost		Manual torque boost
	Acceleration/deceleration time setting		0 to 3600 s (acceleration and deceleration can be set individually), linear or S-pattern acceleration/deceleration mode, backlash countermeasures acceleration/deceleration can be selected.
	DC injection brake (induction motor)		Operation frequency (0 to 120 Hz), operation time (0 to 10 s), operation voltage (0 to 30%) variable
	Stall prevention operation level		Activation range of stall prevention operation (SLD rating: 0 to 120%, LD rating: 0 to 150%, ND rating: 0 to 220%, HD rating: 0 to 280%). Whether to use the stall prevention or not can be selected. (V/F control, Advanced magnetic flux vector control)
	Torque limit level		Torque limit value can be set (0 to 400% variable). (Real sensorless vector control, vector control*1, PM sensorless vector control)
Operation specifications	Frequency setting signal	Analog input	Terminals 2 and 4: 0 to 10 V, 0 to 5 V, 4 to 20 mA (0 to 20 mA) are available. Terminal 1: -10 to +10 V, -5 to +5 V are available.
		Digital input	Input using the setting dial of the operation panel or parameter unit Four-digit BCD or 16-bit binary (when used with option FR-A8AX)
	Start signal		Forward and reverse rotation or start signal automatic self-holding input (3-wire input) can be selected.
	Input signals (twelve terminals)		Low-speed operation command, Middle-speed operation command, High-speed operation command, Second function selection, Terminal 4 input selection, Jog operation selection, Selection of automatic restart after instantaneous power failure, flying start, Output stop, Start self-holding selection, Forward rotation command, Reverse rotation command, Inverter reset The input signal can be changed using **Pr.178 to Pr.189 (input terminal function selection)**.
		Pulse train input	100k pulses/s
	Operational functions		Maximum and minimum frequency settings, multi-speed operation, acceleration/deceleration pattern, thermal protection, DC injection brake, starting frequency, JOG operation, output stop (MRS), stall prevention, regeneration avoidance, increased magnetic excitation deceleration, DC feeding*4, frequency jump, rotation display, automatic restart after instantaneous power failure, electronic bypass sequence, remote setting, automatic acceleration/deceleration, retry function, carrier frequency selection, fast-response current limit, forward/reverse rotation prevention, operation mode selection, slip compensation, droop control, load torque high-speed frequency control, speed smoothing control, traverse, auto tuning, applied motor selection, gain tuning, RS-485 communication, Ethernet communication*10, PID control, PID pre-charge function, easy dancer control, cooling fan operation selection, stop selection (deceleration stop/coasting), power-failure deceleration stop function, stop-on-contact control, PLC function, life diagnosis, maintenance timer, current average monitor, multiple rating, orientation control*1, speed control, torque control, position control, pre-excitation, torque limit, test run, 24 V power supply input for control circuit, safety stop function, anti-sway control
	Output signal	Open collector output (five terminals) Relay output (two terminals)	Inverter running, Up to frequency, Instantaneous power failure/undervoltage, Overload warning, Output frequency detection, Fault The output signal can be changed using **Pr.190 to Pr.196 (output terminal function selection)**. Fault codes of the inverter can be output (4 bits) from the open collector.
		Pulse train output (FM type)	50k pulses/s
Indication	For meter	Pulse train output (FM type)	Max. 2.4 kHz: one terminal (output frequency) The monitored item can be changed using **Pr.54 FM/CA terminal function selection.**
		Current output (CA type)	Max. 20 mADC: one terminal (output frequency) The monitored item can be changed using **Pr.54 FM/CA terminal function selection.**
		Voltage output	Max. 10 VDC: one terminal (output frequency) The monitored item can be changed using **Pr.158 AM terminal function selection.**
	Operation panel (FR-DU08)	Operating status	Output frequency, Output current, Output voltage, Frequency setting value The monitored item can be changed using **Pr.52 Operation panel main monitor selection**.
		Fault record	A fault record is displayed when a fault occurs. Past 8 fault records and the conditions immediately before the fault (output voltage/current/frequency/cumulative energization time/year/month/date/time) are saved.
Protective/ warning function		Protective function	Overcurrent trip during acceleration, Overcurrent trip during constant speed, Overcurrent trip during deceleration or stop, Regenerative overvoltage trip during acceleration, Regenerative overvoltage trip during constant speed, Regenerative overvoltage trip during deceleration or stop, Inverter overload trip, Motor overload trip, Heat sink overheat, Instantaneous power failure*4, Undervoltage*4, Input phase loss*4*5, Stall prevention stop, Loss of synchronism detection*5, Upper limit fault detection, Lower limit fault detection, Brake transistor alarm detection*6, Output side earth (ground) fault overcurrent, Output short circuit, Output phase loss, External thermal relay operation*5, PTC thermistor operation*5, Option fault, Communication option fault, Parameter storage device fault (control board), PU disconnection, Retry count excess*5, CPU fault, Operation panel power supply short circuit/RS-485 terminals power supply short circuit, 24 VDC power fault, Abnormal output current detection*5, Inrush current limit circuit fault*4, Communication fault, Analog input fault, USB communication fault, Safety circuit fault, Overspeed occurrence*5, Speed deviation excess detection*1*5, Signal loss detection*1*5, Excessive position fault*1*5, Brake sequence fault*5, Encoder phase fault*1*5, 4 mA input fault*5, Pre-charge fault*5, PID signal fault*5, Opposite rotation deceleration fault*5, Internal circuit fault, Abnormal internal temperature*7, Magnetic pole position unknown*1
		Warning function	Fan alarm, Stall prevention (overcurrent), Stall prevention (overvoltage), Regenerative brake pre-alarm*5*6, Electronic thermal relay function pre-alarm, PU stop, Speed limit indication*5, Parameter copy, Safety stop, Maintenance signal output*5, USB host error, Home position return setting error*5, Home position return uncompleted*5, Home position return parameter setting error*5, Operation panel lock*5, Password locked*5, Parameter write error, Copy operation error, 24 V external power supply operation, Internal fan alarm*7, Continuous operation during communication fault*5, Load fault warning, Ethernet communication fault*10

Environment	**Surrounding air temperature**	-10°C to +50°C (0°C to +50°C for the FR-A800-GF) (non-freezing) (LD, ND, HD ratings) -10°C to +40°C (0°C to +40°C for the FR-A800-GF) (non-freezing) (SLD rating, IP55 compatible model)
	Surrounding air humidity	95% RH or less (non-condensing) (With circuit board coating (conforming to IEC60721-3-3 3C2/3S2), IP55 compatible model) 90% RH or less (non-condensing) (Without circuit board coating)
	Storage temperature *8	-20°C to +65°C
	Atmosphere	Indoors (without corrosive gas, flammable gas, oil mist, dust and dirt, etc.)
	Altitude/vibration	2500 m or less (For the installation at an altitude above 1000 m, consider a 3% reduction in the rated current per 500 m increase in altitude.), 5.9 m/s^2 *9 or less at 10 to 55 Hz (directions of X, Y, Z axes)

*1 Available only when a vector control compatible option is installed. (The protective function may or may not be available depending on the type of the connected communication option.)
*2 For PM sensorless vector control, refer to **page 243**.
*3 In the initial setting of the FR-A820-00340(5.5K) or higher and the FR-A840-00170(5.5K) or higher, it is limited to 150% by the torque limit level.
*4 Enabled only for standard models and IP55 compatible models.
*5 This protective function is not available in the initial status.
*6 Available for the standard model only.
*7 Available for the IP55 compatible model only.
*8 Temperature applicable for a short time, e.g. in transit.
*9 2.9 m/s^2 or less for the FR-A840-04320(160K) or higher.
*10 Available for the FR-A800-E only.

● PLC function specifications

Item			A800 PLC function specifications
Control method			Repeated operation (by stored program)
I/O control mode			Refresh
Programming language			Relay symbolic language (ladder) Function block
No. of instructions	Sequence instructions		25
	Basic instructions		84
	Application instructions		37
Processing speed			Sequence instructions 1.9 μs to 12 μs/step*1
Number of I/O device points			128 (input: 64 points, output: 64 points) 19 points built-in (input: 12 points, output: 7 points)*2 FR-A8AX (input: 16 points) FR-A8AY (output: 7 points) FR-A8AR (output: 3 points)
Number of analog I/O points			3 input points built-in (Terminals 1, 2, and 4), FR-A8AZ: 1 input point (Terminal 6) 2 output points built-in (Terminals F/C(FM/CA) and AM), FR-A8AY: 2 output points (Terminals AM0 and AM1), FR-A8AZ: 1 output point (Terminal DA1)
Pulse train I/O		Input	Terminal JOG maximum input pulse: 100k pulses/s *3
		Output	Terminal FM maximum output pulse: 50k pulses/s *3
Watchdog timer			10 to 2000 ms
Program capacity			6K steps (24k bytes) (0 to 6144 steps can be set) Contained in one program
Device	Internal relay (M)		128 (M0 to M127)
	Latch relay (L)		Not used (Can be set with parameters but will not latch)*4
	Timer (T)	Number of points	16 (T0 to T15)
		Specifications	100 ms timer: 0.1 to 3276.7 s can be set 10 ms timer: 0.01 to 327.67 s can be set
	Retentive timer (ST)	Number of points	0 (up to 16 by parameter assignment)
		Specifications	100 ms retentive timer: 0.1 to 3276.7 s can be set 10 ms retentive timer: 0.01 to 327.67 s can be set
	Counter (C)	Number of points	16 (C0 to C15)
		Specifications	Normal counter: Setting range 1 to 32767 Interrupt program counter: Not used
	Data register (D)		256 (D0 to D255)
	Special relay (SM)		2048 (SM0 to SM2047) with limited functions
	Special register (SD)		2048 (SD0 to SD2047) with limited functions

*1 The scan time is approximately 40 ms for 1K steps as inverter control is also performed in actual operations.
*2 The signals same as the ones assigned to the inverter I/O terminals are used.
One point is always required for a sequence start (RUN/STOP).
*3 **Pr.291 Pulse train I/O selection** must be set.
*4 There is no device latch function for power failures.
Use the **Pr.1150 to Pr.1199 PLC function user parameters 1 to 50** (D206 to D255) to store device values in the EEPROM.

NOTE

- There is no buffer memory.

Standard model

FR-A820-00046(0.4K), FR-A820-00077(0.75K)(-E)(-GF)(-GN)

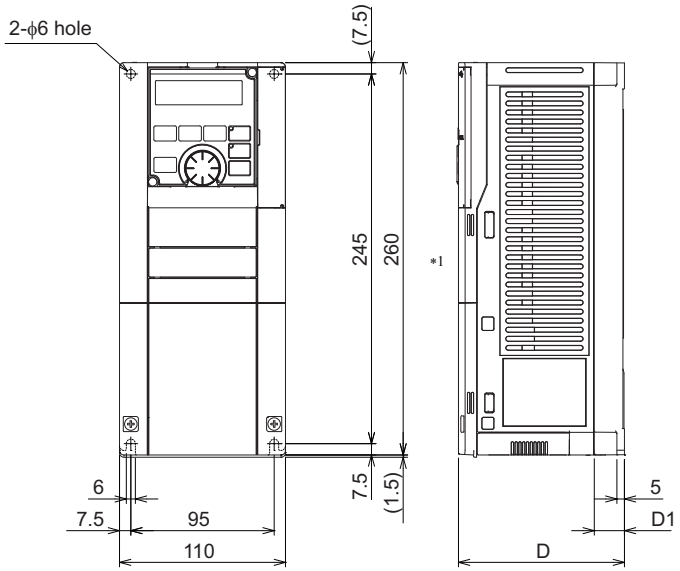

Inverter model	D	D1
FR-A820-00046(0.4K)	110	20
FR-A820-00077(0.75K)	125	35

*1 The LED display cover attached to the FR-A800-GF, FR-A800-GN in this position has an additional 2.1 mm depth.

(Unit: mm)

FR-A820-00105(1.5K), 00167(2.2K), 00250(3.7K)(-E)(-GF)(-GN)
FR-A840-00023(0.4K), 00038(0.75K), 00052(1.5K), 00083(2.2K), 00126(3.7K)(-E)(-GF)(-GN)

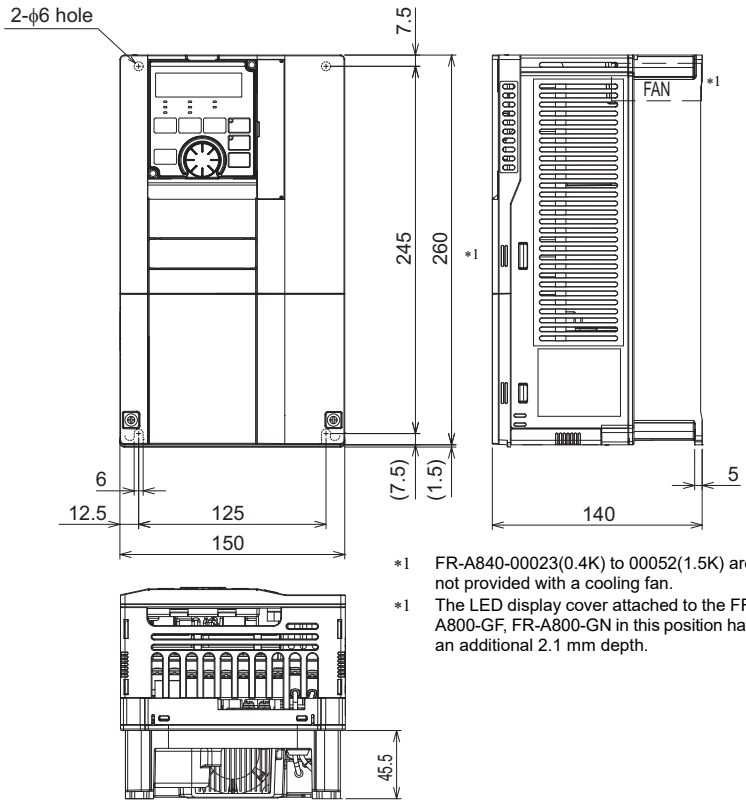

*1 FR-A840-00023(0.4K) to 00052(1.5K) are not provided with a cooling fan.

*1 The LED display cover attached to the FR-A800-GF, FR-A800-GN in this position has an additional 2.1 mm depth.

(Unit: mm)

FR-A820-00340(5.5K), 00490(7.5K), 00630(11K)(-E)(-GF)(-GN)
FR-A840-00170(5.5K), 00250(7.5K), 00310(11K), 00380(15K)(-E)(-GF)(-GN)

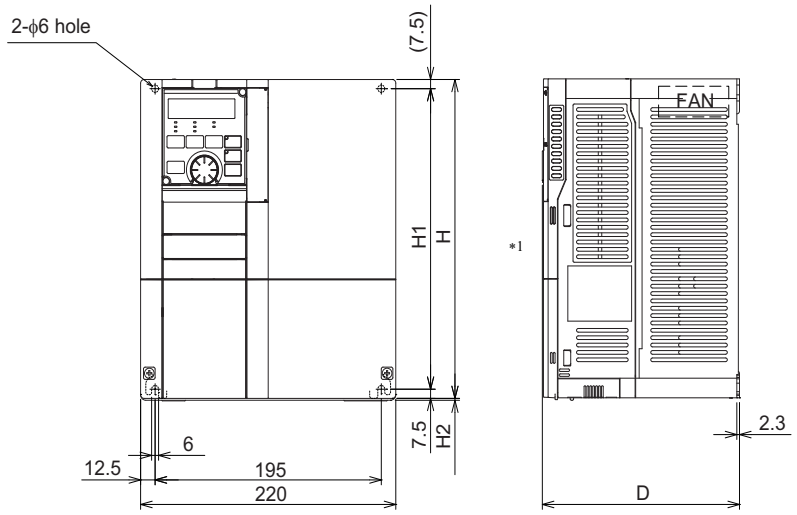

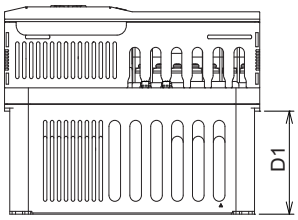

Inverter model	H	H1	H2	D	D1
FR-A820-00340(5.5K), 00490(7.5K) FR-A840-00170(5.5K), 00250(7.5K)	260	245	1.5	170	84
FR-A820-00630(11K) FR-A840-00310(11K), 00380(15K)	300	285	3	190	101.5

*1 The LED display cover attached to the FR-A800-GF, FR-A800-GN in this position has an additional 2.1 mm depth.

(Unit: mm)

FR-A820-00770(15K), 00930(18.5K), 01250(22K)(-E)(-GF)(-GN)
FR-A840-00470(18.5K), 00620(22K)(-E)(-GF)(-GN)

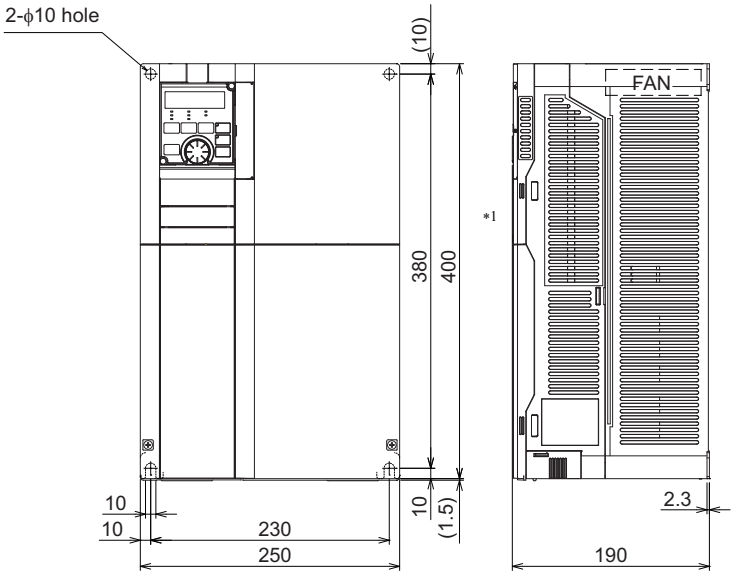

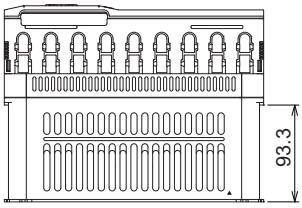

*1 The LED display cover attached to the FR-A800-GF, FR-A800-GN in this position has an additional 2.1 mm depth.

(Unit: mm)

FR-A820-01540(30K)(-E)(-GF)(-GN)
FR-A840-00770(30K)(-E)(-GF)(-GN)

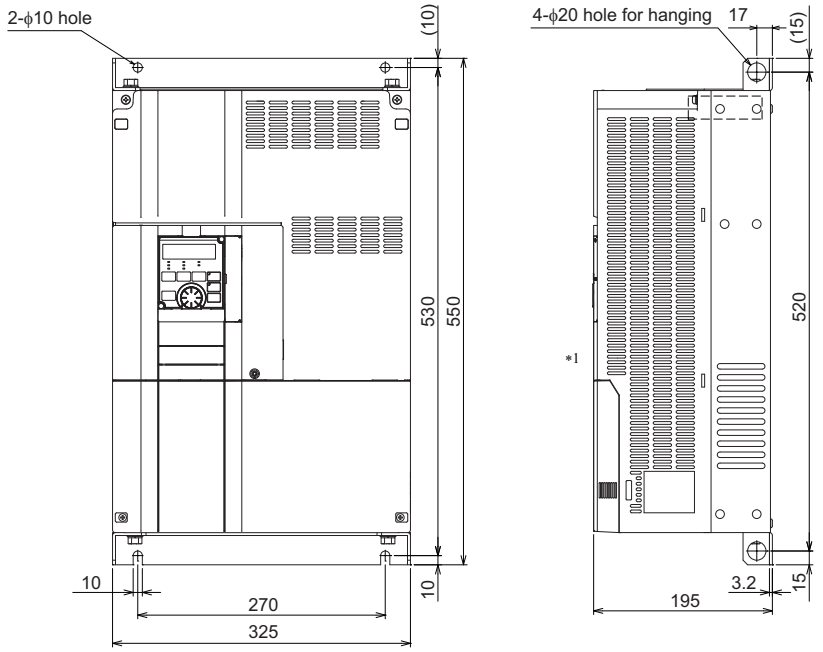

*1 The LED display cover attached to the FR-A800-GF, FR-A800-GN in this position has an additional 2.1 mm depth.

(Unit: mm)

FR-A820-01870(37K), 02330(45K), 03160(55K), 03800(75K), 04750(90K)(-E)(-GF)(-GN)
FR-A840-00930(37K), 01160(45K), 01800(55K), 02160(75K), 02600(90K), 03250(110K), 03610(132K)(-E)(-GF)(-GN)

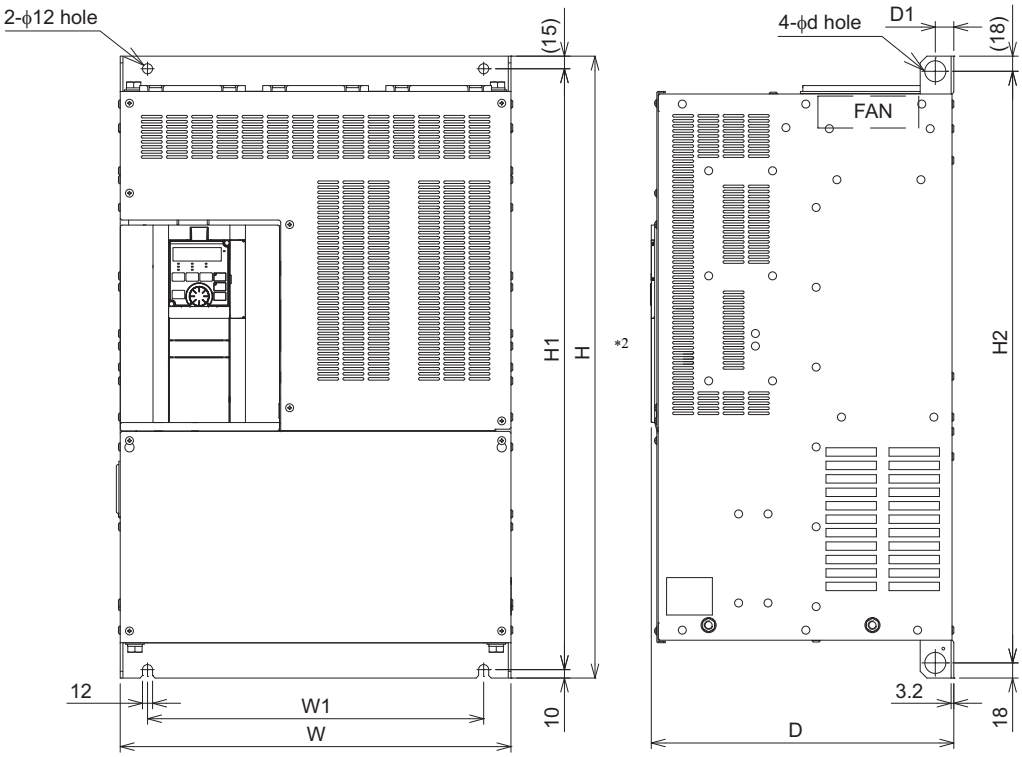

Inverter model	W	W1	H	H1	H2	d	D	D1
FR-A820-01870(37K), 02330(45K) FR-A840-00930(37K), 01160(45K), 01800(55K)*1	435	380	550	525	514	25	250	24
FR-A820-03160(55K)*1	465	410	700	675	664	25	250	22
FR-A820-03800(75K)*1, 04750(90K)*1	465	400	740	715	704	24	360	22
FR-A840-02160(75K)*1, 02600(90K)*1	465	400	620	595	584	24	300	22
FR-A840-03250(110K)*1, 03610(132K)*1	465	400	740	715	704	25	360	22

*1 For the FR-A820-03800(75K) or higher, the FR-A840-02160(75K) or higher, or whenever a 75 kW or higher motor is used, always connect a DC reactor (FR-HEL), which is available as an option.
*2 The LED display cover attached to the FR-A800-GF, FR-A800-GN in this position has an additional 2.1 mm depth.

(Unit: mm)

FR-A840-04320(160K), 04810(185K)(-E)(-GF)(-GN)

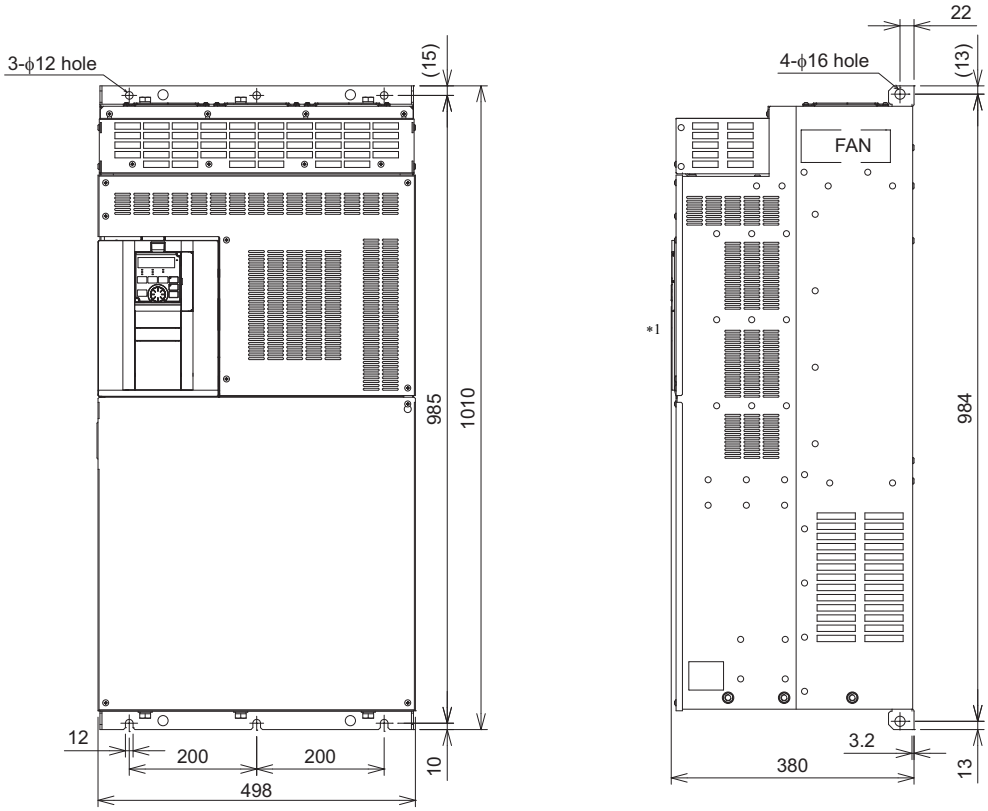

Always connect a DC reactor (FR-HEL), which is available as an option.

*1 The LED display cover attached to the FR-A800-GF, FR-A800-GN in this position has an additional 2.1 mm depth.

(Unit: mm)

FR-A840-05470(220K), 06100(250K), 06830(280K)(-E)(-GF)(-GN)

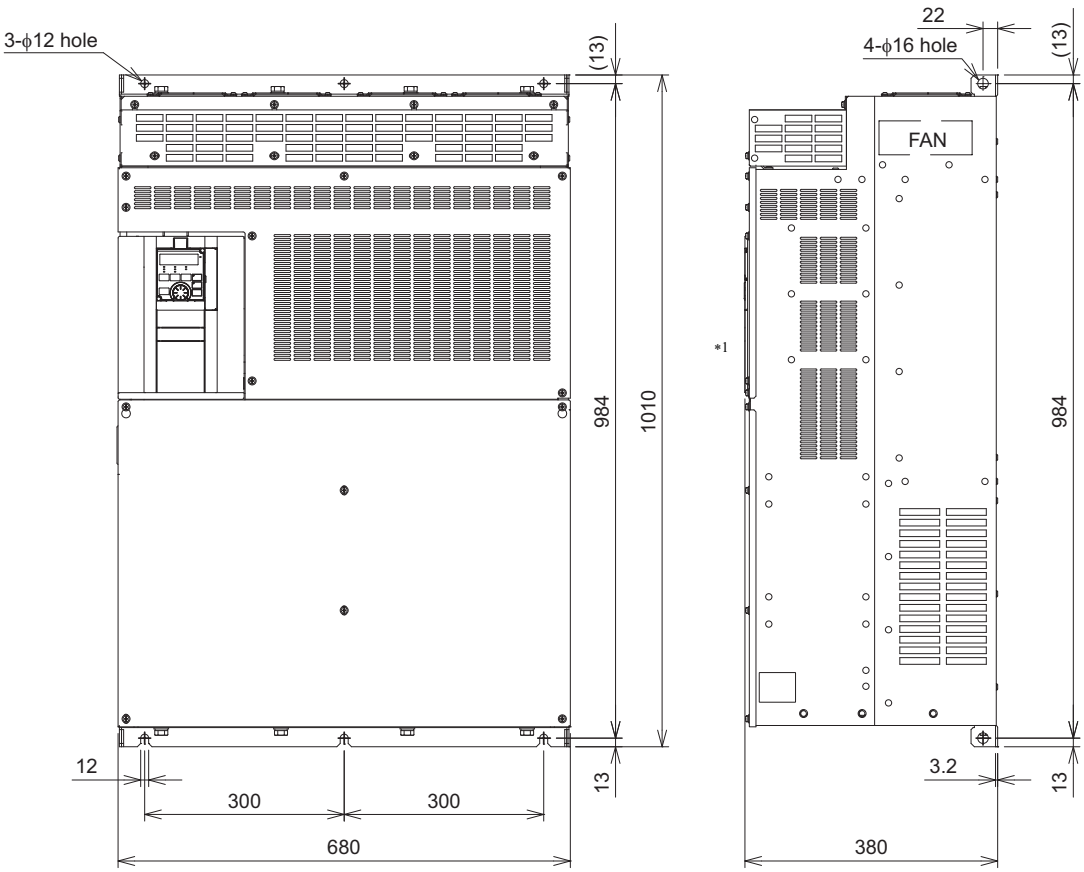

Always connect a DC reactor (FR-HEL), which is available as an option.

*1 The LED display cover attached to the FR-A800-GF, FR-A800-GN in this position has an additional 2.1 mm depth.

(Unit: mm)

● Separated converter type

◆ Inverter

FR-A842-07700(315K), 08660(355K)(-E)(-GF)(-GN)

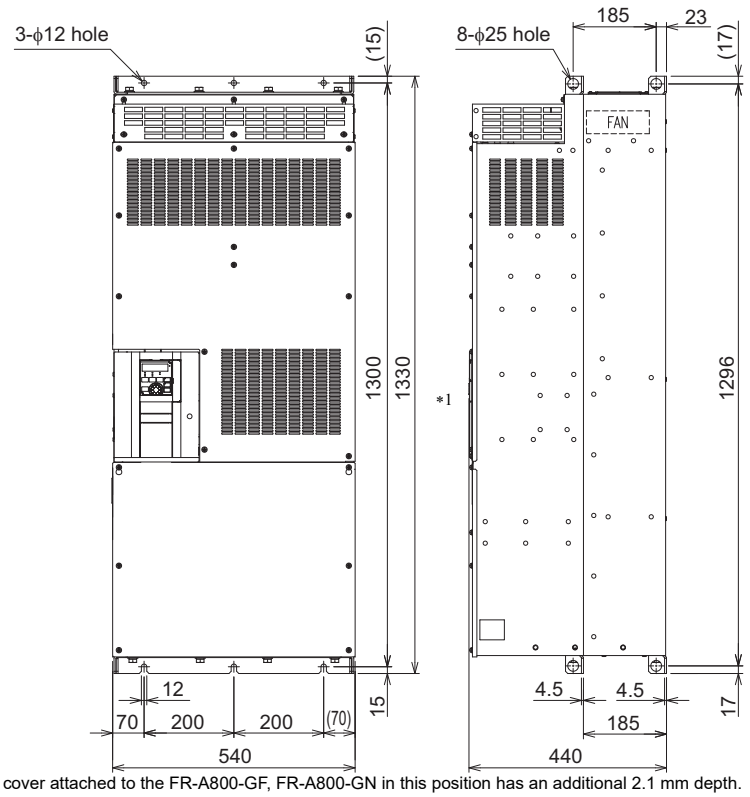

*1 The LED display cover attached to the FR-A800-GF, FR-A800-GN in this position has an additional 2.1 mm depth.

(Unit: mm)

FR-A842-09620(400K), 10940(450K), 12120(500K)(-E)(-GF)(-GN)(-P)

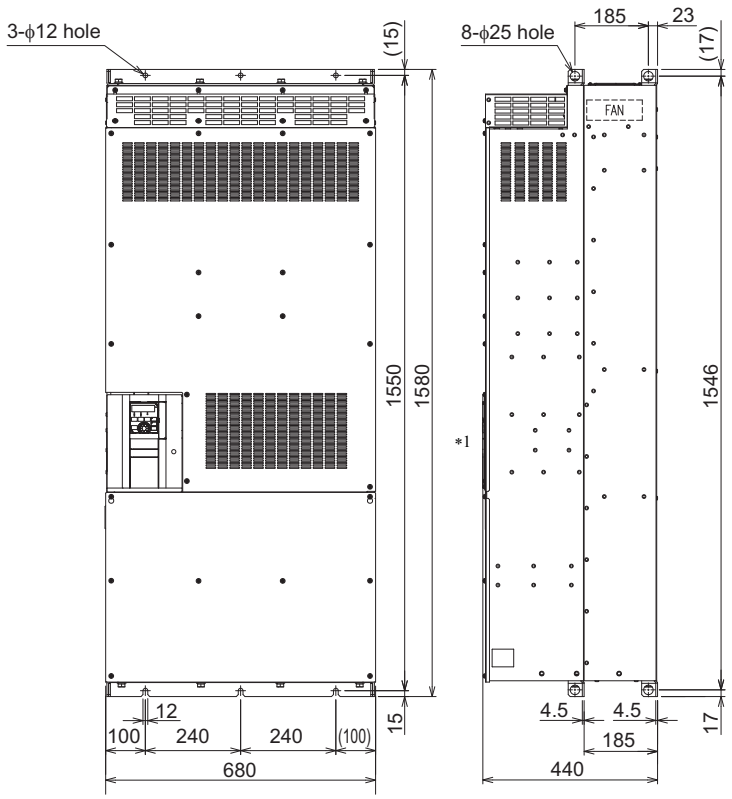

*1 The LED display cover attached to the FR-A800-GF, FR-A800-GN in this position has an additional 2.1 mm depth.

(Unit: mm)

◆ Converter unit

Equipped with a DC reactor.

FR-CC2-H315K, H355K

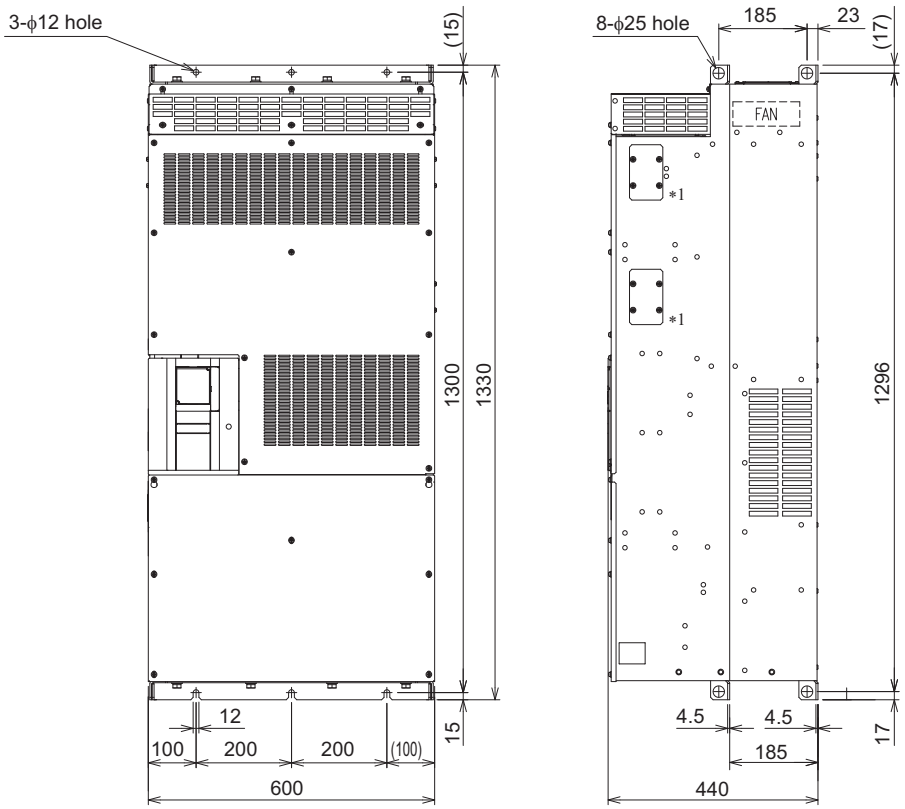

(Unit: mm)

FR-CC2-H400K(-P), H450K(-P), H500K(-P), H560K(-P), H630K

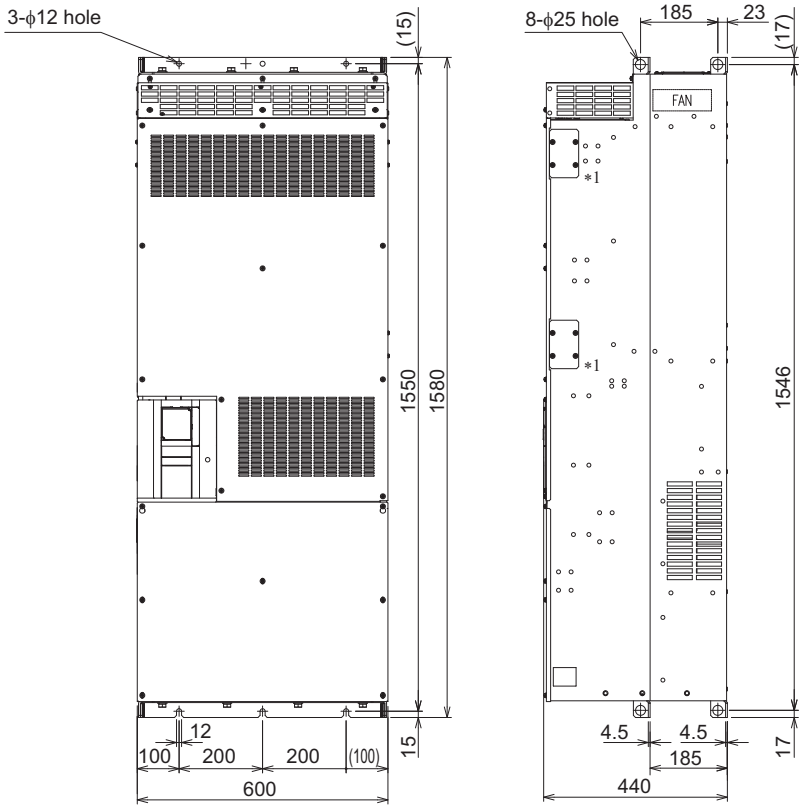

(Unit: mm)

*1 Do not remove the cover on the side of the converter unit.

● IP55 compatible model

Equipped with a DC reactor.

FR-A846-00023(0.4K), 00038(0.75K), 00052(1.5K), 00083(2.2K), 00126(3.7K), 00170(5.5K)(-E)

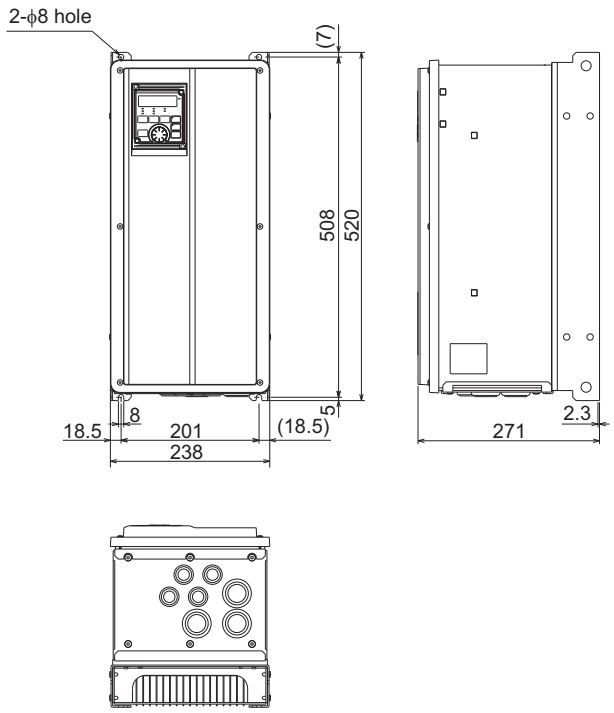

(Unit: mm)

FR-A846-00250(7.5K), 00310(11K), 00380(15K), 00470(18.5K)(-E)

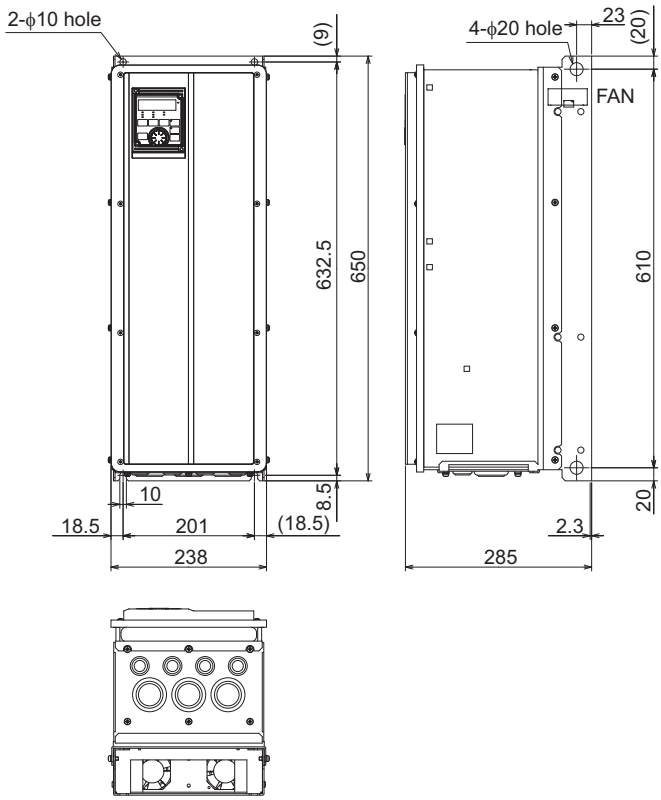

(Unit: mm)

FR-A846-00620(22K), 00770(30K), 00930(37K), 01160(45K)(-E)

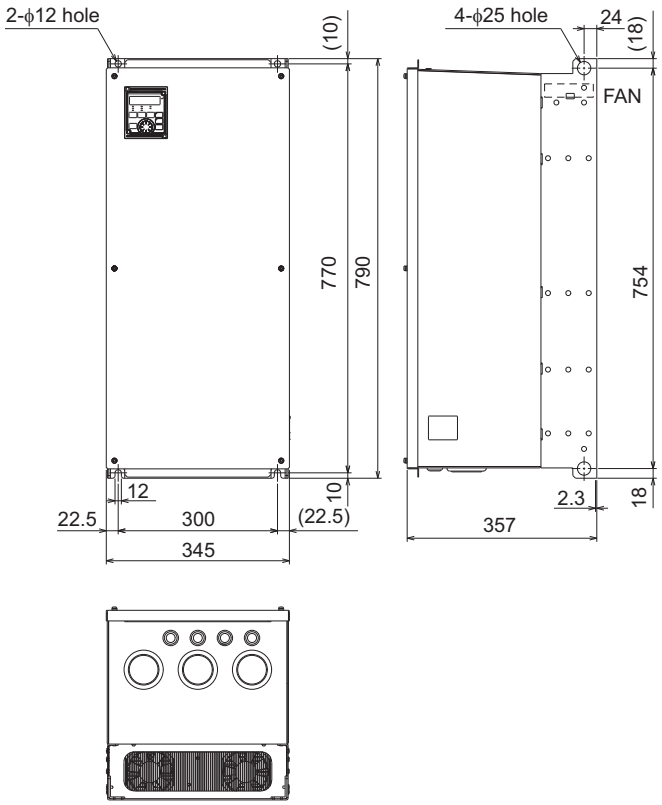

(Unit: mm)

FR-A846-01800(55K), 02160(75K), 02600(90K), 03250(110K), 03610(132K)(-E)

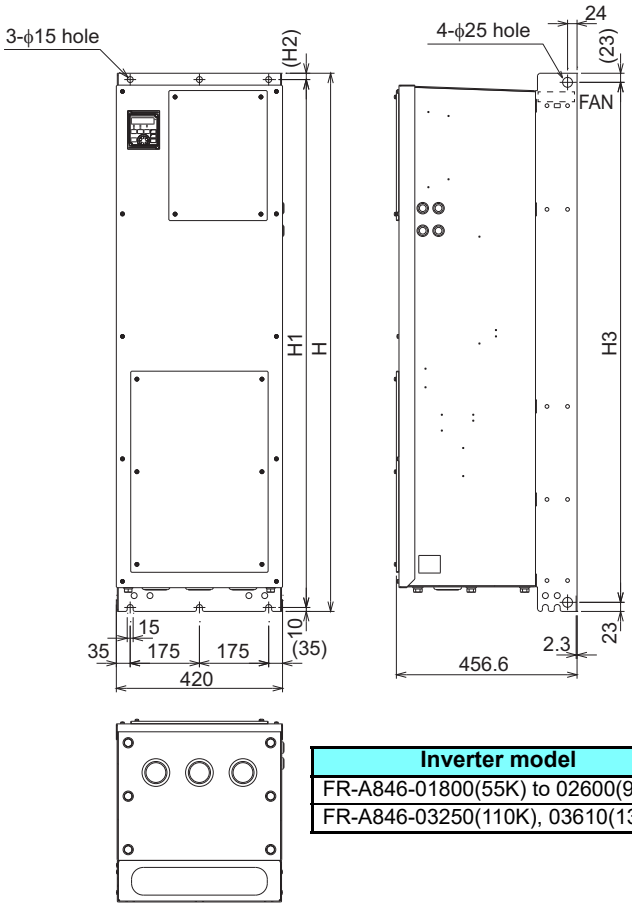

Inverter model	H	H1	H2	H3
FR-A846-01800(55K) to 02600(90K)	1360	1334	16	1314
FR-A846-03250(110K), 03610(132K)	1510	1482	18	1464

(Unit: mm)

● Operation panel (FR-DU08, FR-LU08)

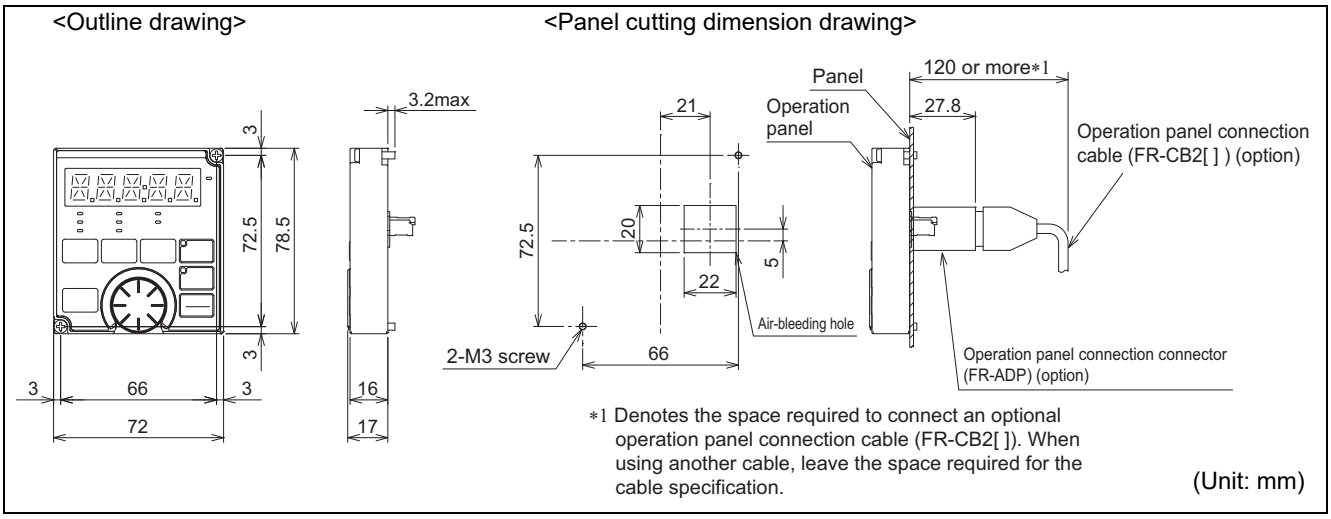

● Protruding the heat sink through the panel

When encasing the inverter or the converter unit in an enclosure, the heat generated in the enclosure can be greatly reduced by protruding the heat sink of the inverter or the converter unit. When installing the inverter in a compact enclosure, etc., this installation method is recommended. For the FR-A840-04320(160K) or higher, a heat sink can be protruded outside the enclosure without using an attachment.

◆ When using a panel through attachment (FR-A8CN)

For the FR-A820-00105(1.5K) to FR-A820-04750(90K) and FR-A840-00023(0.4K) to FR-A840-03610(132K), a heat sink can be protruded outside the enclosure using a panel through attachment (FR-A8CN). Refer to the Instruction Manual of the panel through attachment (FR-A8CN) for details.

- Drawing after attachment installation (when used with the FR-A8CN)

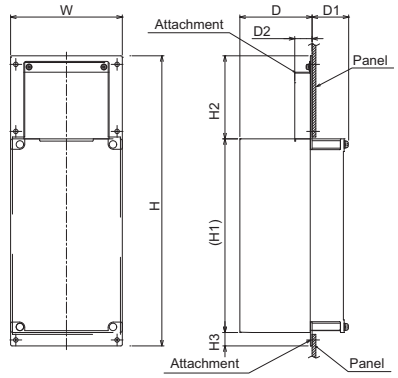

Type	W	H	H1	H2	H3	D	D1	D2
FR-A8CN01	150	389.5	260	111.5	18	97	48.4	24.3
FR-A8CN02	245	408.5	260	116.5	32	86	89.4	21.3
FR-A8CN03	245	448.5	300	116.5	32	89	106.4	21.3
FR-A8CN04	280	554	400	113.5	32	96.7	102.4	40.6
FR-A8CN05	357	654	480	130	44	130.8	64.2	105
FR-A8CN06	478.2	650	465	145	40	96	154	55
FR-A8CN07	510.2	805	610	150	45	130	120	105
FR-A8CN08	510.2	845	650	150	45	176.5	183.5	40
FR-A8CN09	510.2	725	530	150	45	152.3	147.7	65

(Unit: mm)

- Enclosure cut dimensions (when used with the FR-A8CN)

FR-A8CN01

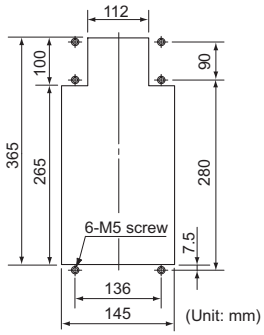

FR-A8CN02

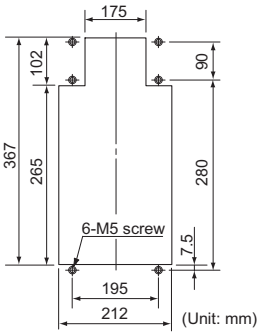

FR-A8CN03

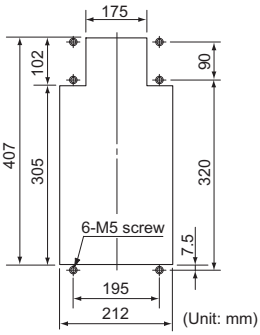

FR-A8CN04

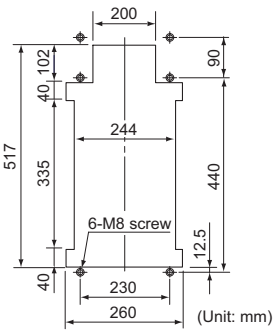

FR-A8CN05

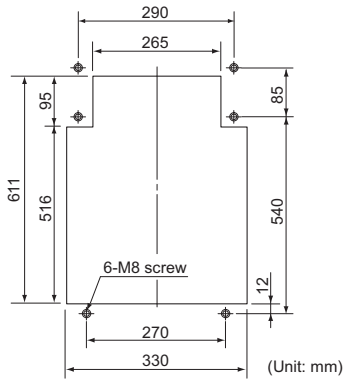

FR-A8CN06

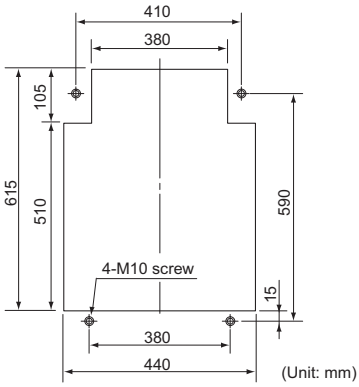

FR-A8CN07

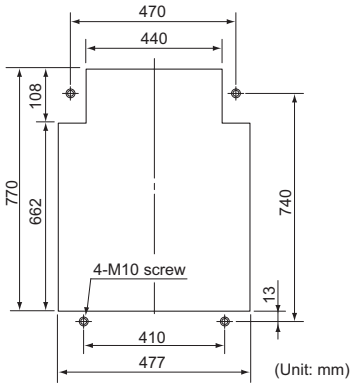

FR-A8CN08

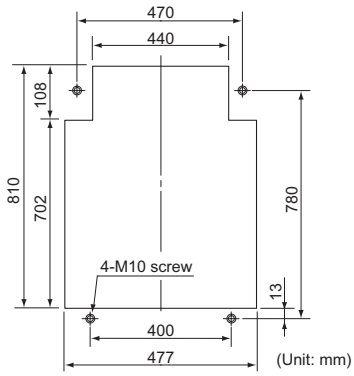

FR-A8CN09

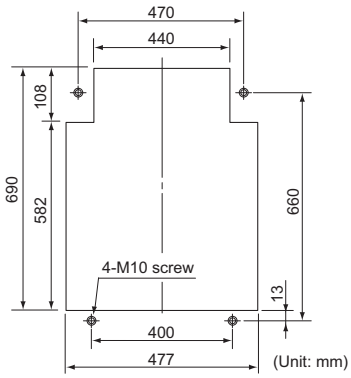

For a compatibility table between the attachment and the inverter, refer to **page 190**.

◆ Heat sink protrusion through the panel for the FR-A840-04320(160K) or higher

- Enclosure cutting
  Cut an enclosure according to the capacity of the inverter or the converter unit.

FR-A840-04320(160K)
FR-A840-04810(185K)

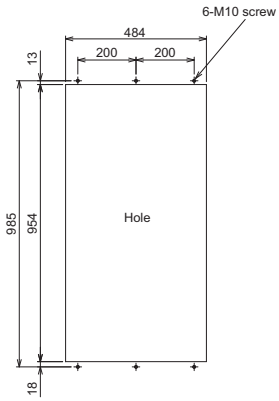

FR-A840-05470(220K)
FR-A840-06100(250K)
FR-A840-06830(280K)

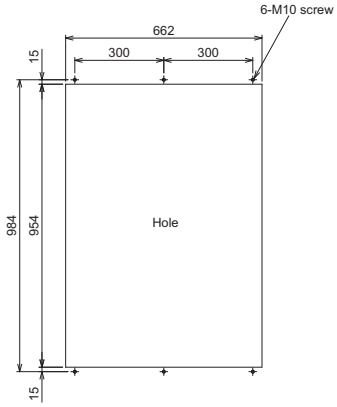

FR-A842-07700(315K)
FR-A842-08660(355K)

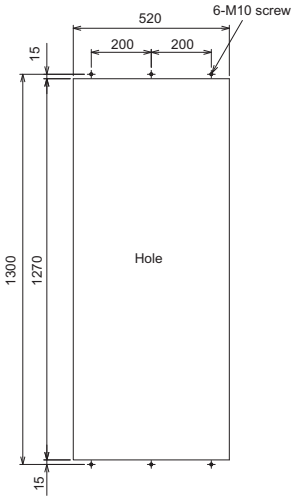

FR-A842-09620(400K)
FR-A842-10940(450K)
FR-A842-12120(500K)

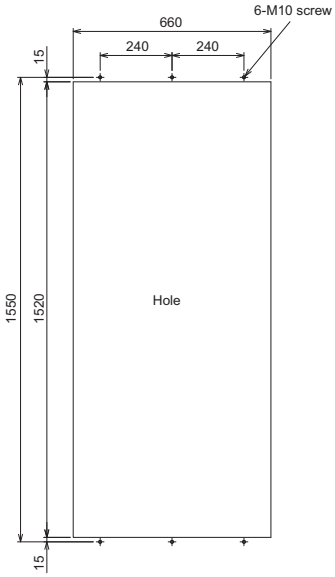

FR-CC2-H315K
FR-CC2-H355K

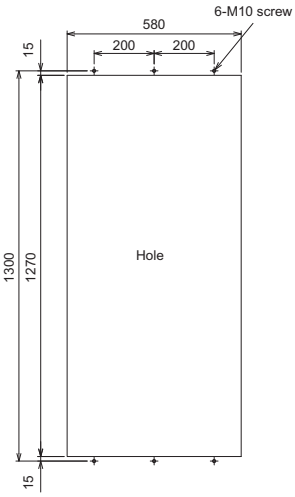

FR-CC2-H400K
FR-CC2-H450K
FR-CC2-H500K
FR-CC2-H560K
FR-CC2-H630K

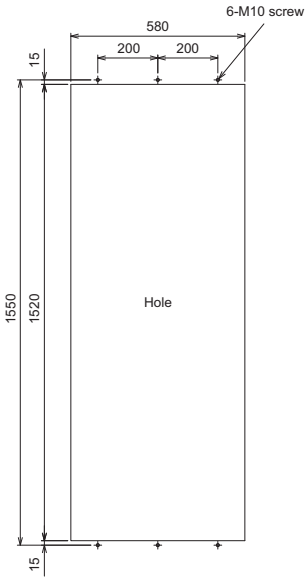

(Unit: mm)

- Shift and removal of a rear side installation frame

For the FR-A840-04320(160K) to FR-A840-06830(280K)

One installation frame is attached to each of the upper and lower parts of the inverter. Change the position of the rear side installation frame on the upper and lower sides of the inverter to the front side as shown below. When changing the installation frames, make sure that the installation orientation is correct.

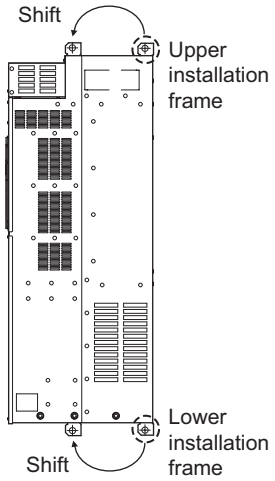

For the FR-A842-07700(315K) to FR-A842-12120(500K), FR-CC2-H315K to FR-CC2-H630K

Two installation frames are attached to each of the upper and lower parts of the inverter or the converter unit. Remove the rear side installation frame on the upper and lower sides of the inverter or the converter unit as shown below.

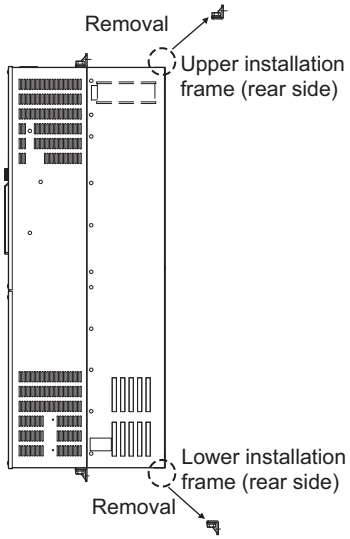

- Installation of the inverter or the converter unit

Push the inverter heat sink portion outside the enclosure and fix the enclosure and the inverter or the converter unit with upper and lower installation frame.

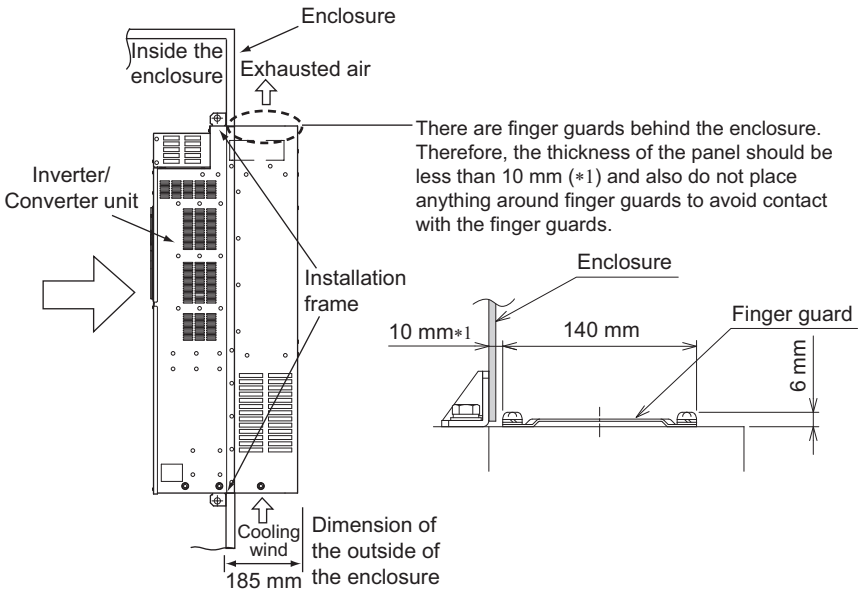

NOTE

- Having a cooling fan, the cooling section which comes out of the enclosure cannot be used in the environment of water drops, oil, mist, dust, etc.
- Be careful not to drop screws, dust etc. into the inverter or the converter unit and the cooling fan section.
- The FR-A7CN panel through attachment cannot be installed on the FR-A800 series.

Terminal Connection Diagram

● Standard models and IP55 compatible models

◆ FM type

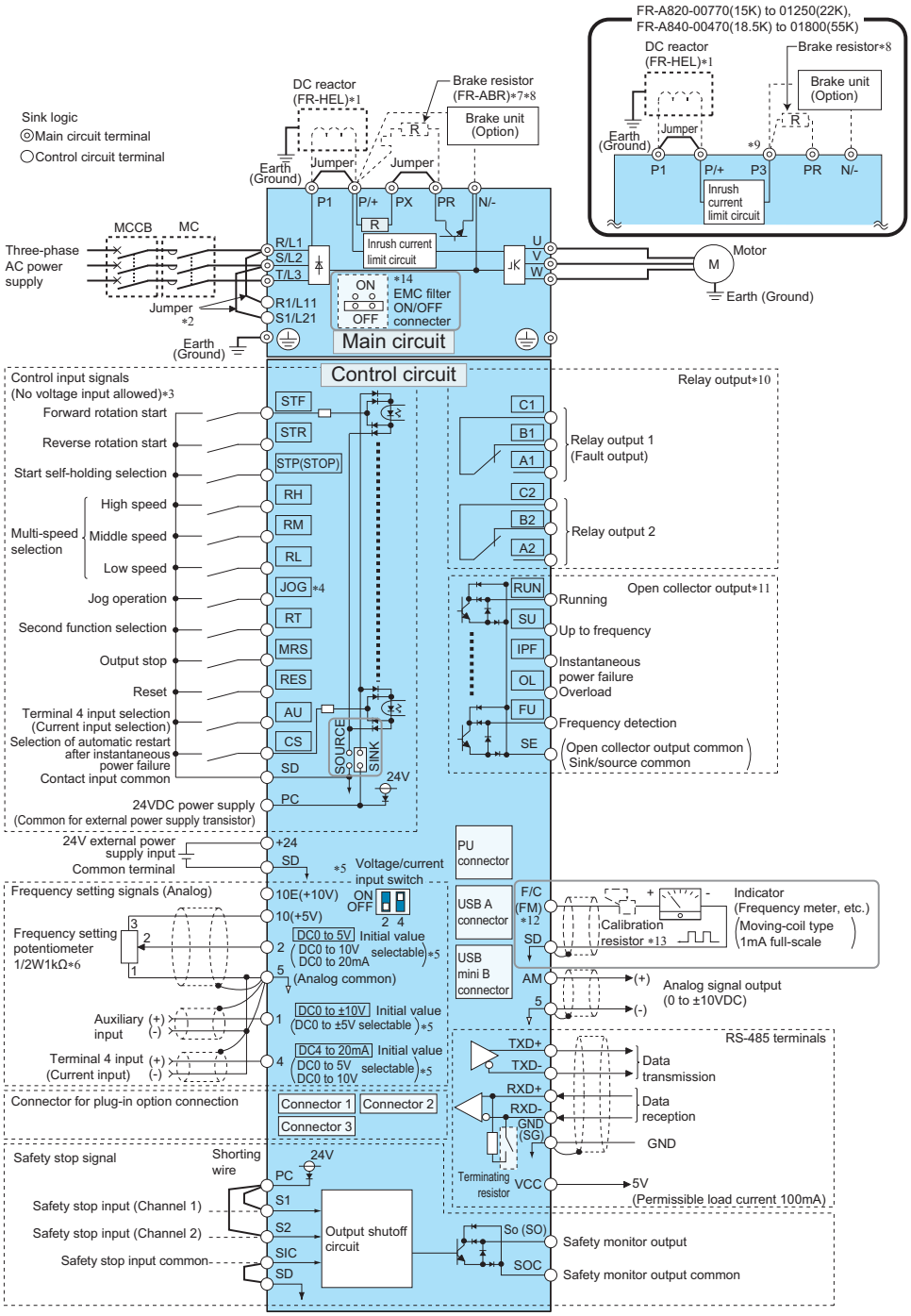

*1 For the FR-A820-03800(75K) or higher, the FR-A840-02160(75K) or higher, and when a 75 kW or higher motor is used, always connect a DC reactor (FR-HEL), which is available as an option. (To select a DC reactor, refer to **page 33**, **page 223**, and select one according to the applicable motor capacity.) When connecting a DC reactor, if a jumper is installed across terminals P1 and P/+, remove the jumper before installing the DC reactor. The IP55 compatible model has a built-in DC reactor. (The jumper is not installed for the FR-A820-03800(75K) or higher and the FR-A840-02160(75K) or higher.)

*2 When using separate power supply for the control circuit, remove the jumper between R1/L11 and S1/L21. IP55 compatible models do not have terminals R1/L11, S1/L21, and jumpers.

*3 The function of these terminals can be changed with the input terminal assignment (**Pr.178 to Pr.189**). (Refer to **page 146**.)

*4 Terminal JOG is also used as a pulse train input terminal. Use **Pr.291** to choose JOG or pulse.

*5 Terminal input specifications can be changed by analog input specification switchover (**Pr.73, Pr.267**). To input a voltage, set the voltage/current input switch OFF. To input a current, set the voltage/current input switch ON. (Refer to **page 132**.)

*6 It is recommended to use 2 W 1 kΩ when the frequency setting signal is changed frequently.

*7 If connecting a brake resistor, remove the jumper between PR and PX (FR-A820-00046(0.4K) to 00490(7.5K), FR-A840-00023(0.4K) to 00250(7.5K)).

*8 Connect a brake resistor across terminals P/+ (P3) and PR. (Terminal PR is equipped in FR-A820-00046(0.4K) to 01250(22K), FR-A840-00023(0.4K) to 01800(55K).) Install a thermal relay to prevent overheating and damage of discharging resistors.

*9 Do not connect the DC power supply (under DC feeding mode) to terminal P3.

*10 The function of these terminals can be changed with the output terminal assignment (**Pr.195, Pr.196**). (Refer to **page 147**.)

*11 The function of these terminals can be changed with the output terminal assignment (**Pr.190 to Pr.194**). (Refer to **page 147**.)

*12 Terminal F/C (FM) can be used to output pulse trains as open collector output by setting **Pr.291**.

*13 Not required when calibrating the scale with the operation panel.

*14 Do not change the initially set ON (enabled) position of the EMC filter ON/OFF connector in the case of the inverter with a built-in C2 filter (IP55 compatible model). The Class C2 compatibility condition is not satisfied with the EMC filter OFF. The FR-A846-00250(7.5K)-C2 to FR-A846-00470(18.5K)-C2 are not provided with the EMC filter ON/OFF connector. The EMC filter is always ON.

◆ **CA type**

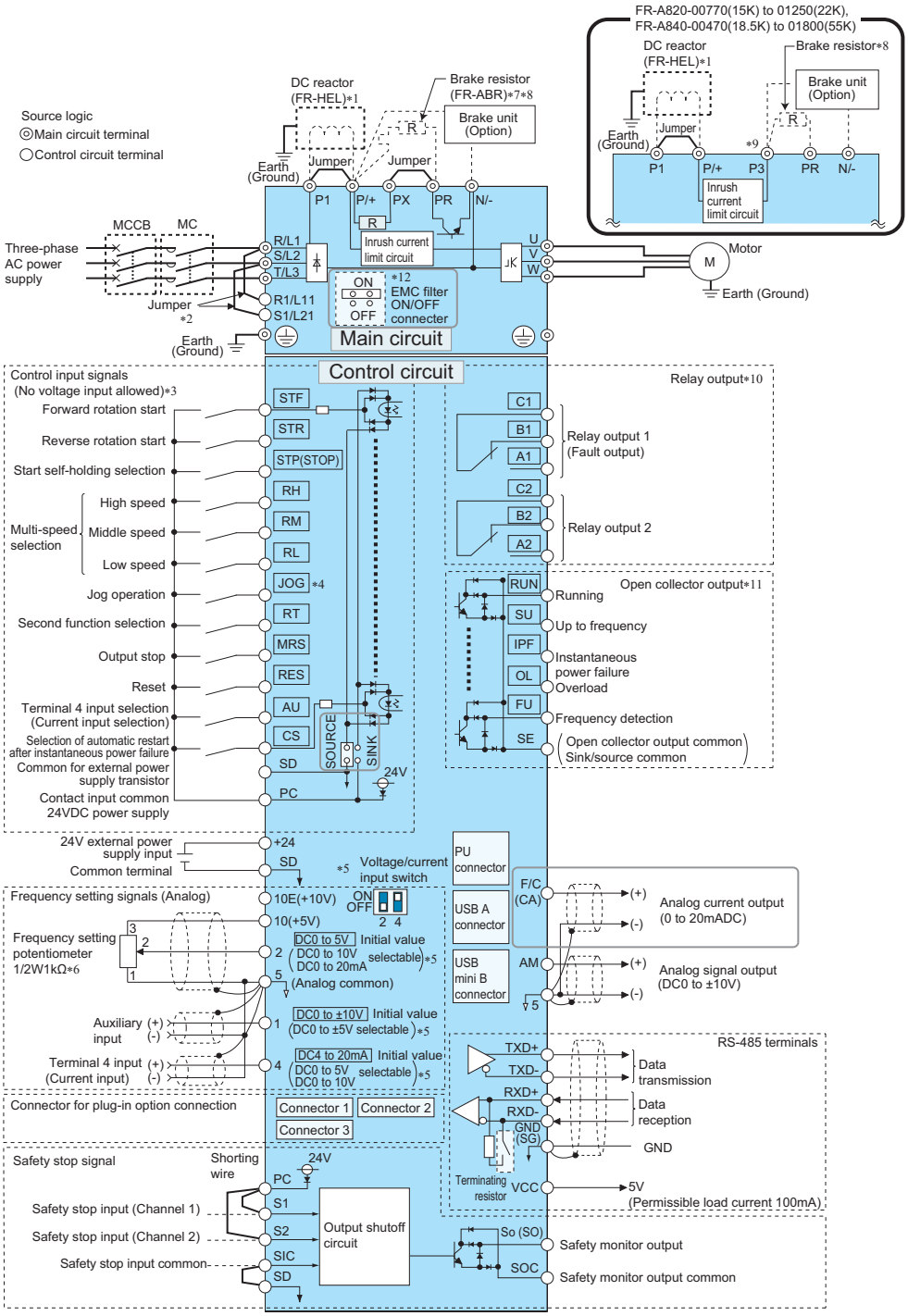

*1 For the FR-A820-03800(75K) or higher, the FR-A840-02160(75K) or higher, and when a 75 kW or higher motor is used, always connect a DC reactor (FR-HEL), which is available as an option. (To select a DC reactor, refer to **page 33**, **page 223**, and select one according to the applicable motor capacity.)
When connecting a DC reactor, if a jumper is installed across terminals P1 and P/+, remove the jumper before installing the DC reactor.
The IP55 compatible model has a built-in DC reactor. (The jumper is not installed for the FR-A820-03800(75K) or higher and the FR-A840-02160(75K) or higher.)

*2 When using separate power supply for the control circuit, remove the jumper between R1/L11 and S1/L21. IP55 compatible models do not have terminals R1/L11, S1/L21, and jumpers.

*3 The function of these terminals can be changed with the input terminal assignment (**Pr.178 to Pr.189**). (Refer to **page 146**.)

*4 Terminal JOG is also used as a pulse train input terminal. Use **Pr.291** to choose JOG or pulse.

*5 Terminal input specifications can be changed by analog input specification switchover (**Pr.73, Pr.267**). To input a voltage, set the voltage/current input switch OFF. To input a current, set the voltage/current input switch ON. (Refer to **page 132**.)

*6 It is recommended to use 2 W 1 kΩ when the frequency setting signal is changed frequently.

*7 If connecting a brake resistor, remove the jumper between PR and PX (FR-A820-00046(0.4K) to 00490(7.5K), FR-A840-00023(0.4K) to 00250(7.5K)).

*8 Connect a brake resistor across terminals P/+ (P3) and PR. (Terminal PR is equipped in FR-A820-00046(0.4K) to 01250(22K), FR-A840-00023(0.4K) to 01800(55K).) Install a thermal relay to prevent overheating and damage of discharging resistors.

*9 Do not connect the DC power supply (under DC feeding mode) to terminal P3.

*10 The function of these terminals can be changed with the output terminal assignment (**Pr.195, Pr.196**). (Refer to **page 147**.)

*11 The function of these terminals can be changed with the output terminal assignment (**Pr.190 to Pr.194**). (Refer to **page 147**.)

*12 Do not change the initially set ON (enabled) position of the EMC filter ON/OFF connector in the case of the inverter with a built-in C2 filter (IP55 compatible model). The Class C2 compatibility condition is not satisfied with the EMC filter OFF. The FR-A846-00250(7.5K)-C2 to FR-A846-00470(18.5K)-C2 are not provided with the EMC filter ON/OFF connector. The EMC filter is always ON.

Separated converter type

FM type

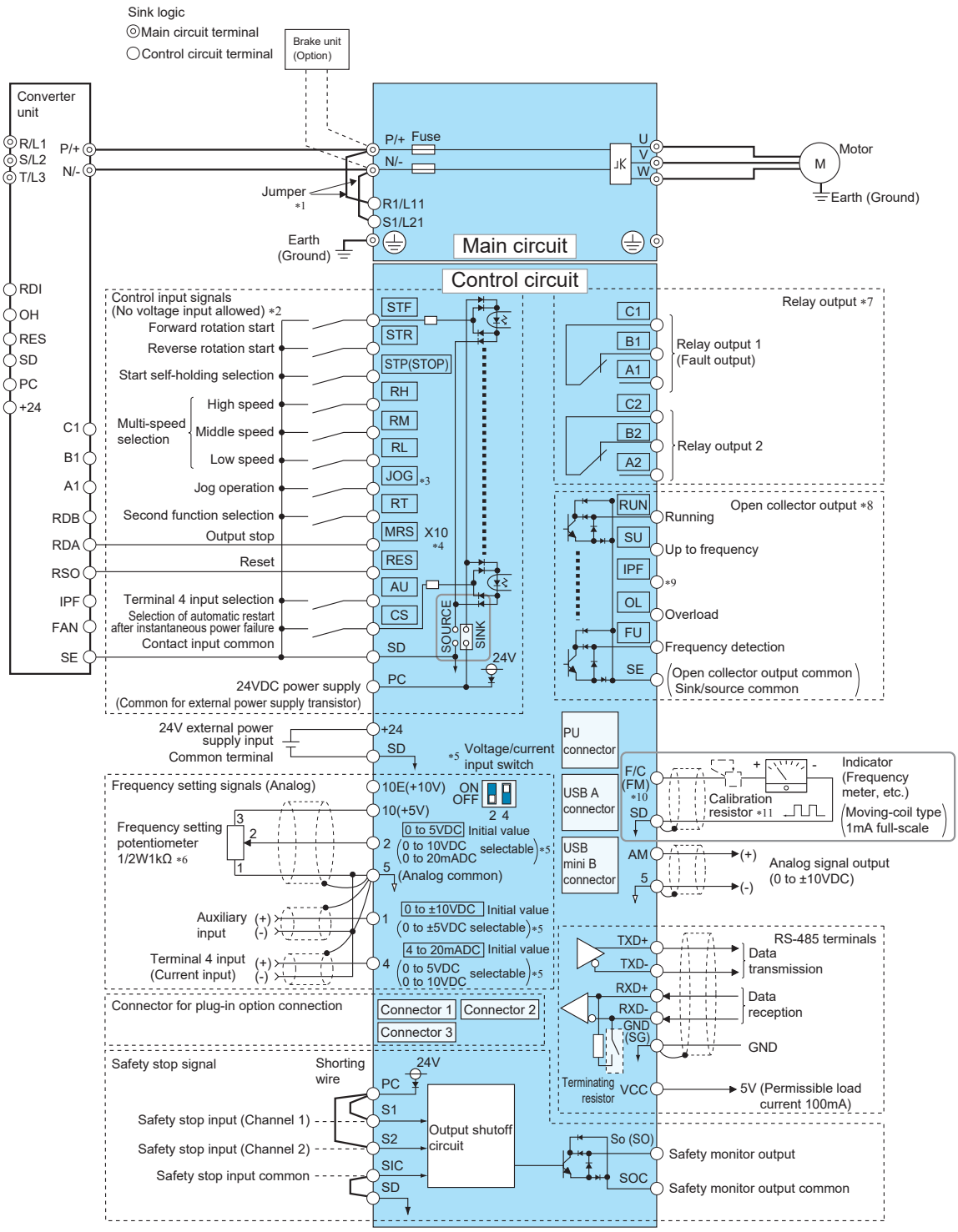

*1 Terminals R1/L11 and S1/L21 are connected to terminals P/+ and N/- with a jumper respectively. When using separate power supply for the control circuit, remove the jumpers from R1/L11 and S1/L21.
*2 The function of these terminals can be changed with the input terminal assignment **(Pr.178 to Pr.189)**.
*3 Terminal JOG is also used as the pulse train input terminal. Use **Pr.291** to choose JOG or pulse.
*4 The X10 signal (NC contact input specification) is assigned to terminal MRS in the initial setting. Set **Pr.599** = "0" to change the input specification of the X10 signal to NO contact.
*5 Terminal input specifications can be changed by analog input specification switchover **(Pr.73, Pr.267).** To input a voltage, set the voltage/current input switch OFF. To input a current, set the voltage/current input switch ON. Terminals 10 and 2 are also used as a PTC input terminal. **(Pr.561)**
*6 It is recommended to use 2 W 1 kΩ when the frequency setting signal is changed frequently.
*7 The function of these terminals can be changed with the output terminal assignment **(Pr.195, Pr.196)**.
*8 The function of these terminals can be changed with the output terminal assignment **(Pr.190 to Pr.194).**
*9 No function is assigned in the initial setting. Use **Pr.192** for function assignment.
*10 Terminal FM can be used to output pulse trains as open collector output by setting **Pr.291**.
*11 Not required when calibrating the scale with the operation panel.

● Converter unit (FR-CC2)

◆ When the sink logic is selected

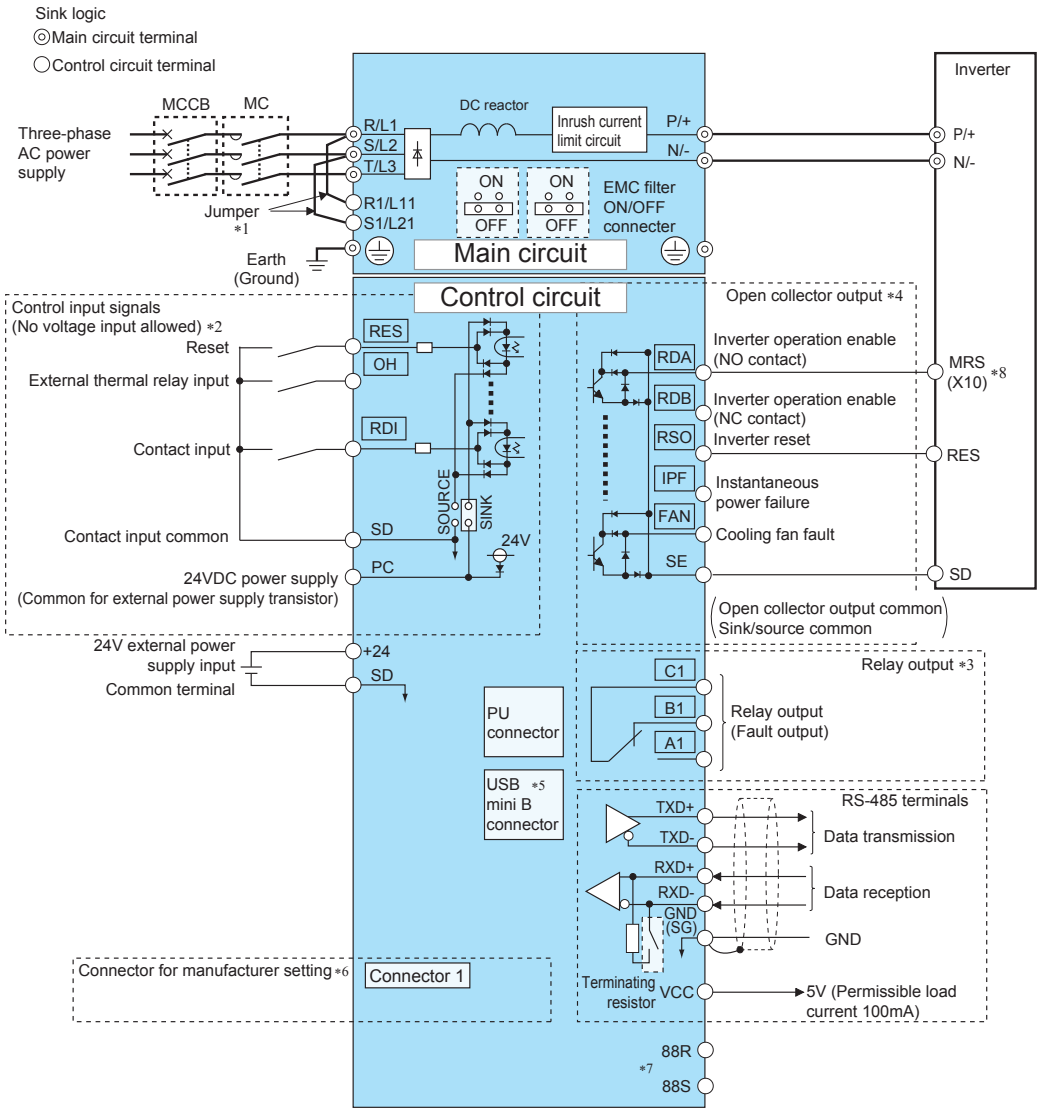

◆ For a 12-phase application

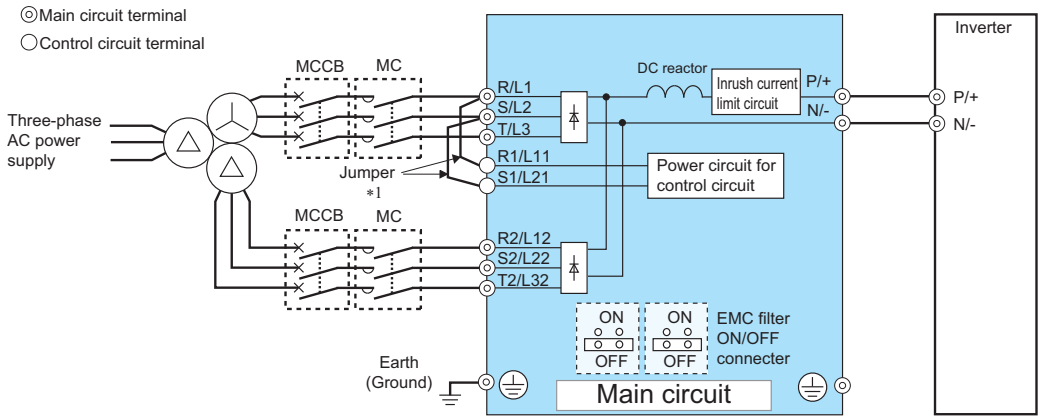

*1 When using separate power supply for the control circuit, remove the jumpers from R1/L11 and S1/L21.
*2 The function of these terminals can be changed with the input terminal assignment **(Pr.178, Pr.187, Pr.189)**.
*3 The function of these terminals can be changed with the output terminal assignment **(Pr.195)**.
*4 The function of these terminals can be changed with the output terminal assignment **(Pr.190 to Pr.194).**
*5 The connector is for manufacturer setting. Do not use.
*6 Plug-in options cannot be used.
*7 For manufacturer setting. Do not use.
*8 To use RDA signal of the converter unit, select the NC contact input specification for the input logic of MRS signal or X10 signal of the inverter.
To use RDB signal of the converter unit, select the NO contact input specification for the input logic of MRS signal or X10 signal of the inverter.
(For changing the input logic, refer to the Instruction Manual of the inverter.)

● FR-A800-E

◆ FM type

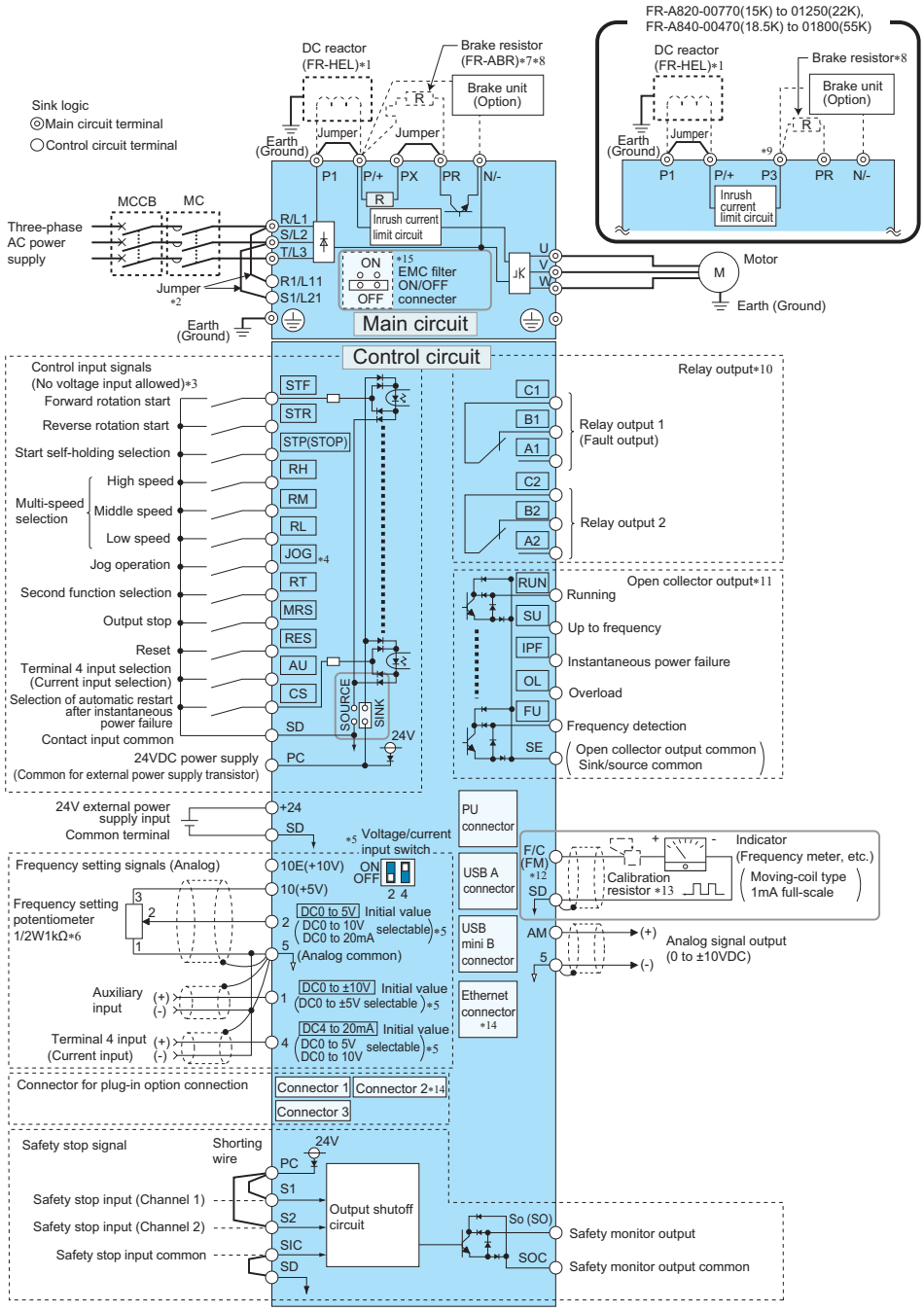

*1 For the FR-A820-03800(75K) or higher, the FR-A840-02160(75K) or higher, and when a 75 kW or higher motor is used, always connect a DC reactor (FR-HEL), which is available as an option. (To select a DC reactor, refer to **page 33**, **page 223**, and select one according to the applicable motor capacity.)
When connecting a DC reactor, if a jumper is installed across terminals P1 and P/+, remove the jumper before installing the DC reactor.
The IP55 compatible model has a built-in DC reactor. (The jumper is not installed for the FR-A820-03800(75K) or higher and the FR-A840-02160(75K) or higher.)

*2 When using separate power supply for the control circuit, remove the jumper between R1/L11 and S1/L21. IP55 compatible models do not have terminals R1/L11, S1/L21, and jumpers.

*3 The function of these terminals can be changed with the input terminal assignment (**Pr.178 to Pr.189**). (Refer to **page 146**.)

*4 Terminal JOG is also used as a pulse train input terminal. Use **Pr.291** to choose JOG or pulse.

*5 Terminal input specifications can be changed by analog input specification switchover (**Pr.73, Pr.267**). To input a voltage, set the voltage/current input switch OFF. To input a current, set the voltage/current input switch ON. (Refer to **page 132**.)

*6 It is recommended to use 2 W 1 kΩ when the frequency setting signal is changed frequently.

*7 If connecting a brake resistor, remove the jumper between PR and PX (FR-A820-00046(0.4K) to 00490(7.5K), FR-A840-00023(0.4K) to 00250(7.5K)).

*8 Connect a brake resistor across terminals P/+ (P3) and PR. (Terminal PR is equipped in FR-A820-00046(0.4K) to 01250(22K), FR-A840-00023(0.4K) to 01800(55K).) Install a thermal relay to prevent overheating and damage of discharging resistors.

*9 Do not connect the DC power supply (under DC feeding mode) to terminal P3.

*10 The function of these terminals can be changed with the output terminal assignment (**Pr.195, Pr.196**). (Refer to **page 147**.)

*11 The function of these terminals can be changed with the output terminal assignment (**Pr.190 to Pr.194**). (Refer to **page 147**.)

*12 Terminal F/C (FM) can be used to output pulse trains as open collector output by setting **Pr.291**.

*13 Not required when calibrating the scale with the operation panel.

*14 The option connector 2 cannot be used because the Ethernet board is installed in the initial status. The Ethernet board must be removed to install a plug-in option to the option connector 2. (However, Ethernet communication is disabled in that case.)

*15 Do not change the initially set ON (enabled) position of the EMC filter ON/OFF connector in the case of the inverter with a built-in C2 filter (IP55 compatible model). The Class C2 compatibility condition is not satisfied with the EMC filter OFF. The FR-A846-00250(7.5K)-C2 to FR-A846-00470(18.5K)-C2 are not provided with the EMC filter ON/OFF connector. The EMC filter is always ON.

◆ **CA type**

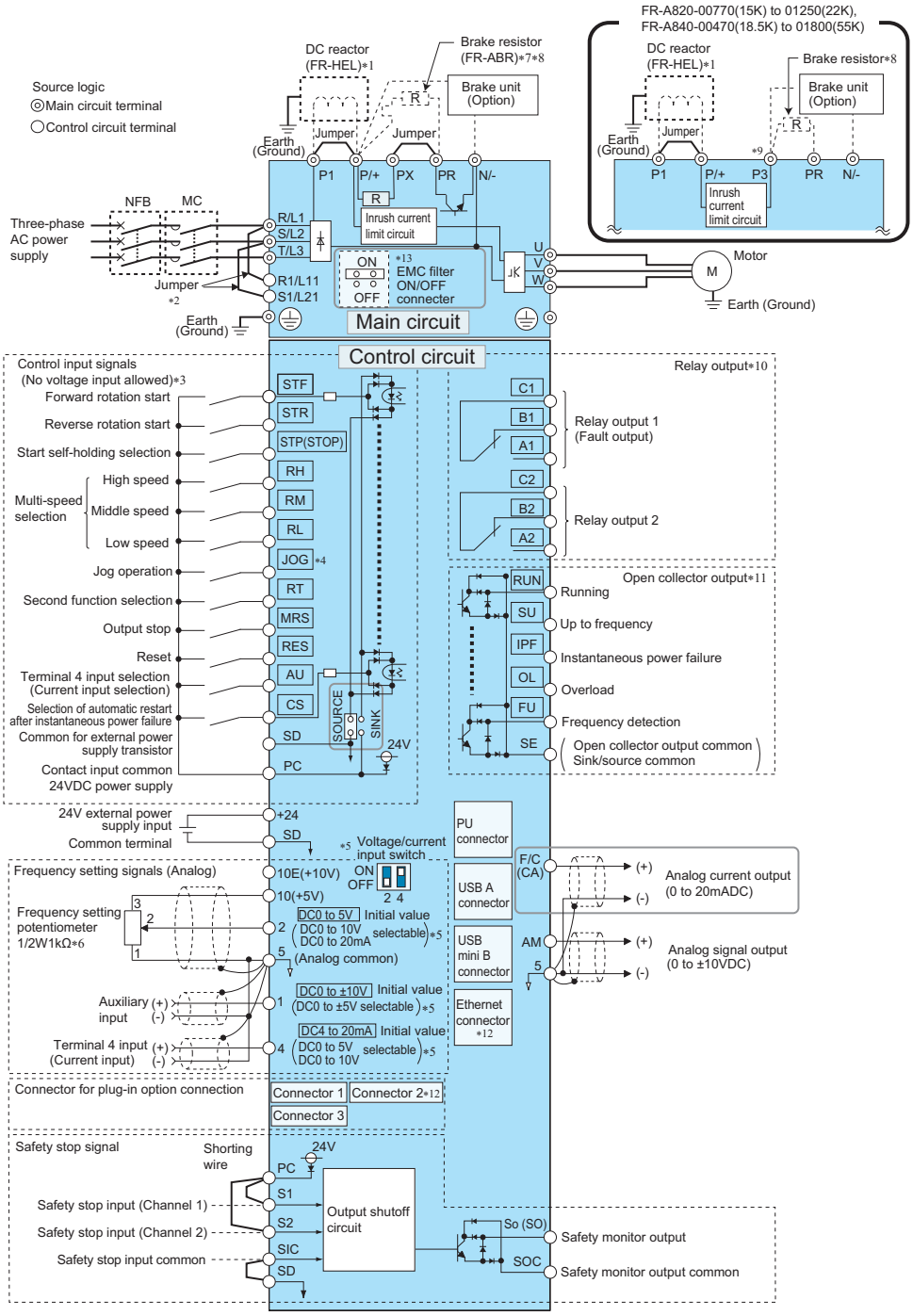

*1 For the FR-A820-03800(75K) or higher, the FR-A840-02160(75K) or higher, and when a 75 kW or higher motor is used, always connect a DC reactor (FR-HEL), which is available as an option. (To select a DC reactor, refer to **page 33**, **page 223**, and select one according to the applicable motor capacity.) When connecting a DC reactor, if a jumper is installed across terminals P1 and P/+, remove the jumper before installing the DC reactor. The IP55 compatible model has a built-in DC reactor. (The jumper is not installed for the FR-A820-03800(75K) or higher and the FR-A840-02160(75K) or higher.)

*2 When using separate power supply for the control circuit, remove the jumper between R1/L11 and S1/L21. IP55 compatible models do not have terminals R1/L11, S1/L21, and jumpers.

*3 The function of these terminals can be changed with the input terminal assignment (**Pr.178 to Pr.189**). (Refer to **page 146**.)

*4 Terminal JOG is also used as a pulse train input terminal. Use **Pr.291** to choose JOG or pulse.

*5 Terminal input specifications can be changed by analog input specification switchover (**Pr.73, Pr.267**). To input a voltage, set the voltage/current input switch OFF. To input a current, set the voltage/current input switch ON. (Refer to **page 132**.)

*6 It is recommended to use 2 W 1 kΩ when the frequency setting signal is changed frequently.

*7 If connecting a brake resistor, remove the jumper between PR and PX (FR-A820-00046(0.4K) to 00490(7.5K), FR-A840-00023(0.4K) to 00250(7.5K)).

*8 Connect a brake resistor across terminals P/+ (P3) and PR. (Terminal PR is equipped in FR-A820-00046(0.4K) to 01250(22K), FR-A840-00023(0.4K) to 01800(55K).) Install a thermal relay to prevent overheating and damage of discharging resistors. (Refer to the Instruction Manual (Detailed).)

*9 Do not connect the DC power supply (under DC feeding mode) to terminal P3.

*10 The function of these terminals can be changed with the output terminal assignment (**Pr.195, Pr.196**). (Refer to **page 147**.)

*11 The function of these terminals can be changed with the output terminal assignment (**Pr.190 to Pr.194**). (Refer to **page 147**.)

*12 The option connector 2 cannot be used because the Ethernet board is installed in the initial status. The Ethernet board must be removed to install a plug-in option to the option connector 2. (However, Ethernet communication is disabled in that case.)

*13 Do not change the initially set ON (enabled) position of the EMC filter ON/OFF connector in the case of the inverter with a built-in C2 filter (IP55 compatible model). The Class C2 compatibility condition is not satisfied with the EMC filter OFF. The FR-A846-00250(7.5K)-C2 to FR-A846-00470(18.5K)-C2 are not provided with the EMC filter ON/OFF connector. The EMC filter is always ON.

● FR-A800-GF, FR-A800-GN

◆ FM type

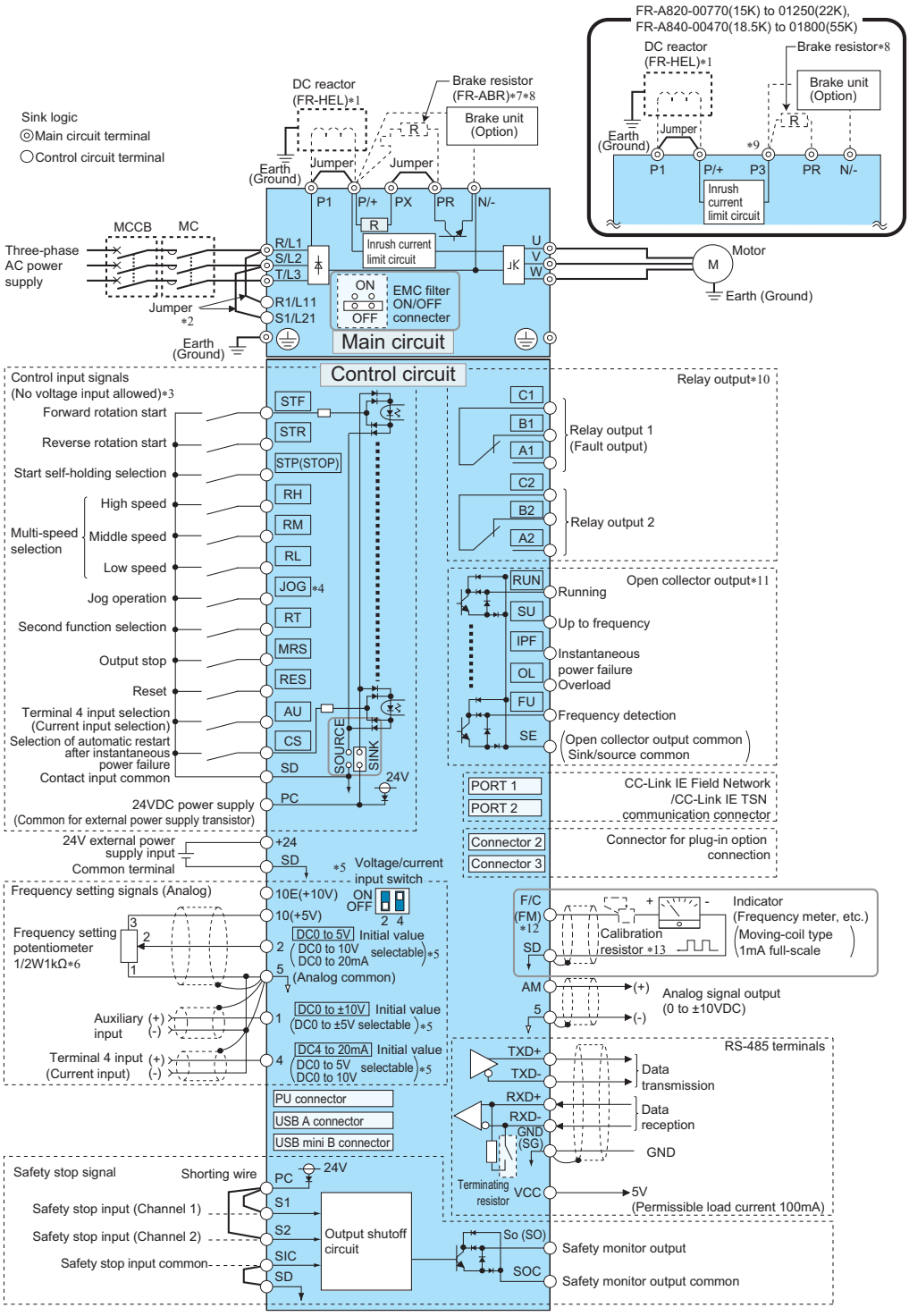

*1 For the FR-A820-03800(75K) or higher, the FR-A840-02160(75K) or higher, and when a 75 kW or higher motor is used, always connect a DC reactor (FR-HEL), which is available as an option. (To select a DC reactor, refer to **page 33**, **page 223**, and select one according to the applicable motor capacity.) When connecting a DC reactor, if a jumper is installed across terminals P1 and P/+, remove the jumper before installing the DC reactor. (The jumper is not installed for the FR-A820-03800(75K) or higher and the FR-A840-02160(75K) or higher.)

*2 When using separate power supply for the control circuit, remove the jumper between R1/L11 and S1/L21.

*3 The function of these terminals can be changed with the input terminal assignment (**Pr.178 to Pr.189**). (Refer to **page 146**.)

*4 Terminal JOG is also used as a pulse train input terminal. Use **Pr.291** to choose JOG or pulse.

*5 Terminal input specifications can be changed by analog input specification switchover (**Pr.73, Pr.267**). To input a voltage, set the voltage/current input switch OFF. To input a current, set the voltage/current input switch ON. (Refer to **page 132**.)

*6 It is recommended to use 2 W 1 kΩ when the frequency setting signal is changed frequently.

*7 If connecting a brake resistor, remove the jumper between PR and PX (FR-A820-00046(0.4K) to 00490(7.5K), FR-A840-00023(0.4K) to 00250(7.5K)).

*8 Connect a brake resistor across terminals P/+ (P3) and PR. (Terminal PR is equipped in FR-A820-00046(0.4K) to 01250(22K), FR-A840-00023(0.4K) to 01800(55K).) Install a thermal relay to prevent overheating and damage of discharging resistors.

*9 Do not connect the DC power supply (under DC feeding mode) to terminal P3.

*10 The function of these terminals can be changed with the output terminal assignment (**Pr.195, Pr.196**). (Refer to **page 147**.)

*11 The function of these terminals can be changed with the output terminal assignment (**Pr.190 to Pr.194**). (Refer to **page 147**.)

*12 Terminal F/C (FM) can be used to output pulse trains as open collector output by setting **Pr.291**.

*13 Not required when calibrating the scale with the operation panel.

◆ **CA type**

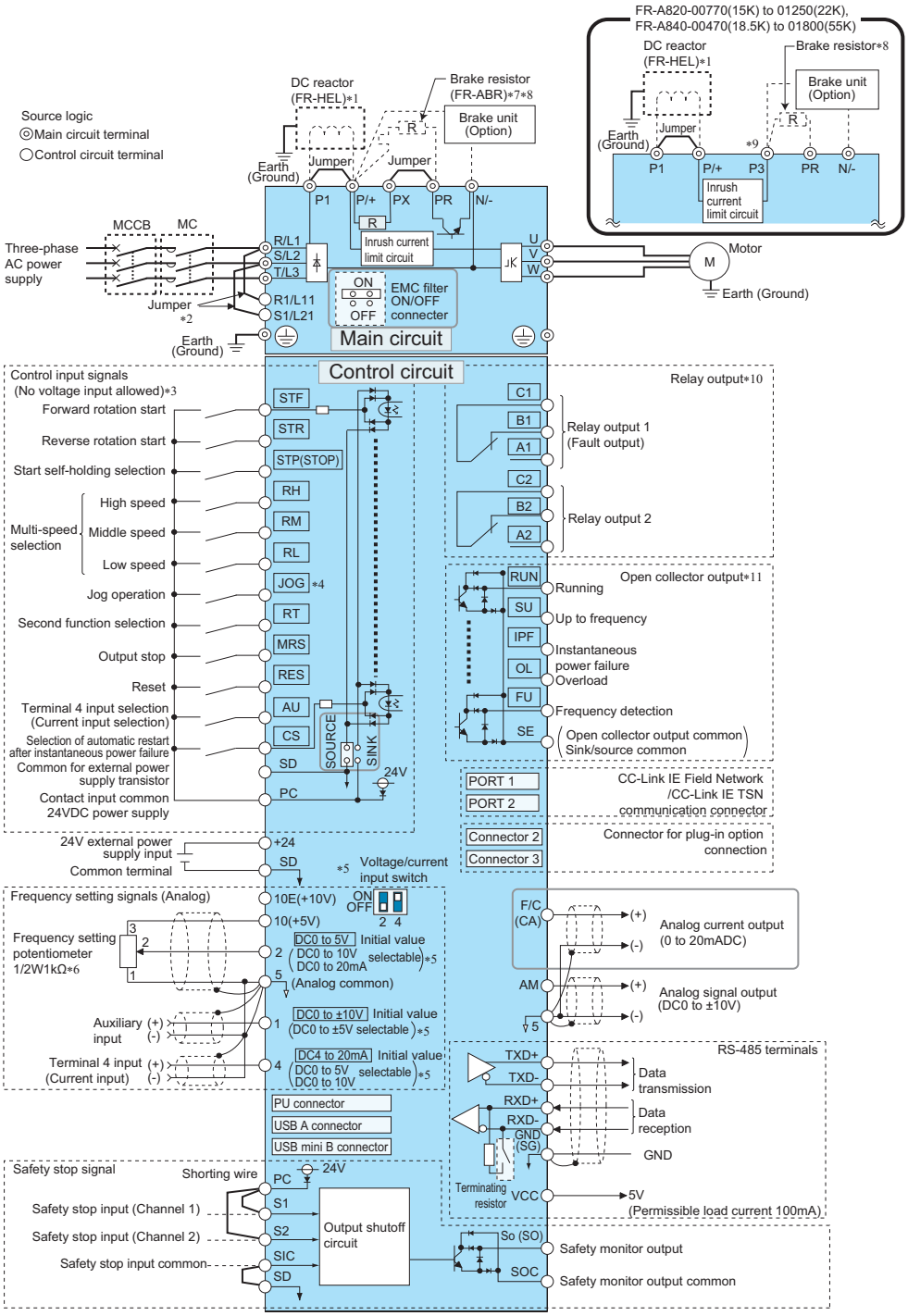

*1 For the FR-A820-03800(75K) or higher, the FR-A840-02160(75K) or higher, and when a 75 kW or higher motor is used, always connect a DC reactor (FR-HEL), which is available as an option. (To select a DC reactor, refer to **page 33**, **page 223**, and select one according to the applicable motor capacity.) When connecting a DC reactor, if a jumper is installed across terminals P1 and P/+, remove the jumper before installing the DC reactor. (The jumper is not installed for the FR-A820-03800(75K) or higher and the FR-A840-02160(75K) or higher.)

*2 When using separate power supply for the control circuit, remove the jumper between R1/L11 and S1/L21.

*3 The function of these terminals can be changed with the input terminal assignment (**Pr.178 to Pr.189**). (Refer to **page 146**.)

*4 Terminal JOG is also used as a pulse train input terminal. Use **Pr.291** to choose JOG or pulse.

*5 Terminal input specifications can be changed by analog input specification switchover (**Pr.73, Pr.267**). To input a voltage, set the voltage/current input switch OFF. To input a current, set the voltage/current input switch ON. (Refer to **page 132**.)

*6 It is recommended to use 2 W 1 kΩ when the frequency setting signal is changed frequently.

*7 If connecting a brake resistor, remove the jumper between PR and PX (FR-A820-00046(0.4K) to 00490(7.5K), FR-A840-00023(0.4K) to 00250(7.5K)).

*8 Connect a brake resistor across terminals P/+ (P3) and PR. (Terminal PR is equipped in FR-A820-00046(0.4K) to 01250(22K), FR-A840-00023(0.4K) to 01800(55K).) Install a thermal relay to prevent overheating and damage of discharging resistors.

*9 Do not connect the DC power supply (under DC feeding mode) to terminal P3.

*10 The function of these terminals can be changed with the output terminal assignment (**Pr.195, Pr.196**). (Refer to **page 147**.)

*11 The function of these terminals can be changed with the output terminal assignment (**Pr.190 to Pr.194**). (Refer to **page 147**.)

Separated converter type (FR-A842-P)

FM type

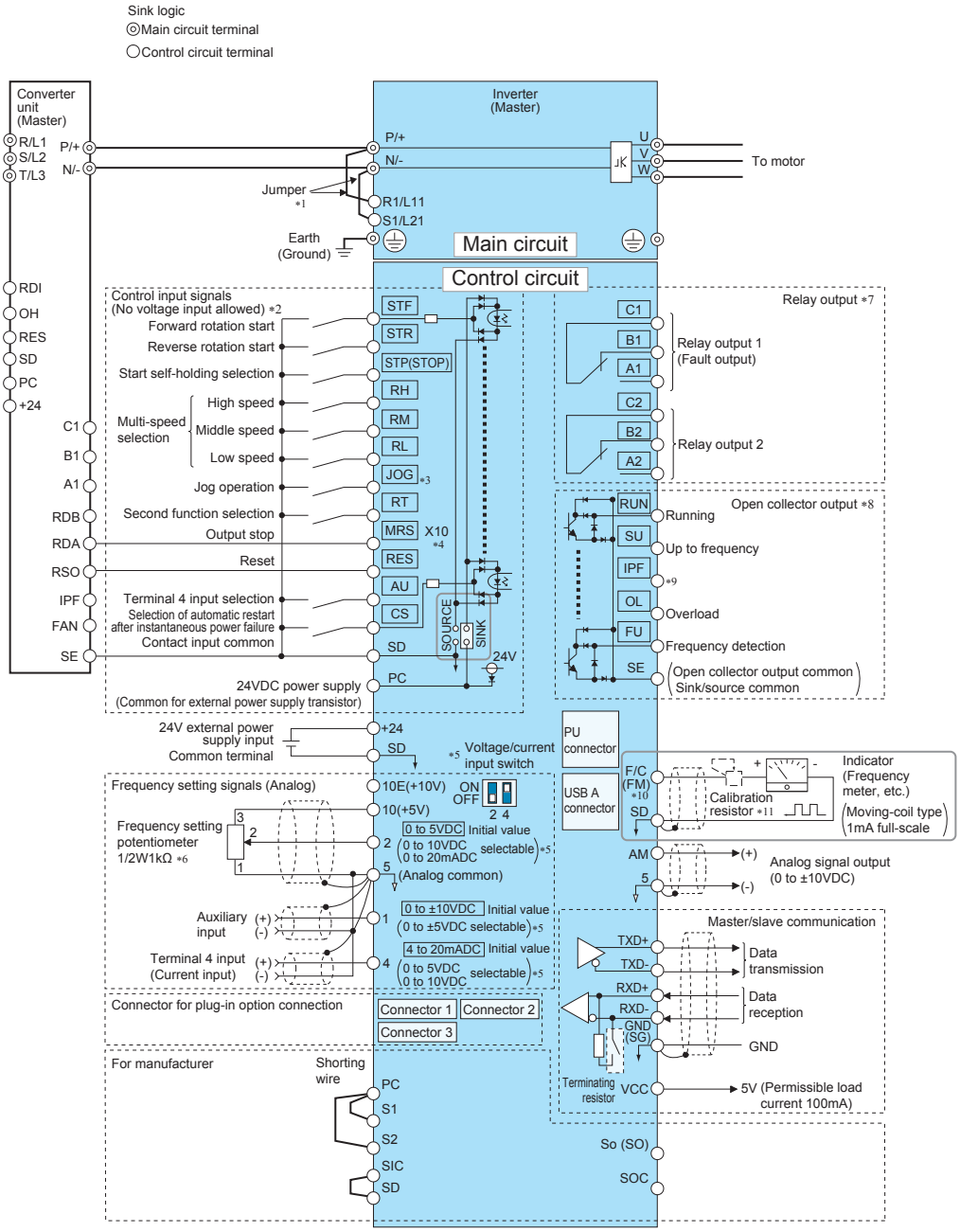

*1 Terminals R1/L11 and S1/L21 are connected to terminals P/+ and N/- with a jumper respectively. When using separate power supply for the control circuit, remove the jumpers from R1/L11 and S1/L21.
*2 The function of these terminals can be changed with the input terminal assignment (**Pr.178 to Pr.189**).
*3 Terminal JOG is also used as the pulse train input terminal. Use **Pr.291** to choose JOG or pulse.
*4 The X10 signal (NC contact input specification) is assigned to terminal MRS in the initial setting. Set **Pr.599** = "0" to change the input specification of the X10 signal to NO contact.
*5 Terminal input specifications can be changed by analog input specification switchover (**Pr.73, Pr.267**). To input a voltage (0 to 5 V/0 to 10 V), set the voltage/current input switch OFF. To input a current (4 to 20 mA), set the voltage/current input switch ON. Terminals 10 and 2 are also used as a PTC input terminal. (**Pr.561**)
*6 It is recommended to use 2 W 1 kΩ when the frequency setting signal is changed frequently.
*7 The function of these terminals can be changed with the output terminal assignment (**Pr.195, Pr.196**).
*8 The function of these terminals can be changed with the output terminal assignment (**Pr.190 to Pr.194**).
*9 No function is assigned in the initial setting. Use **Pr.192** for function assignment.
*10 Terminal F/C (FM) can be used to output pulse trains as open collector output by setting **Pr.291**.
*11 Not required when calibrating the scale with the operation panel.

NOTE

- For the system configuration for the parallel operation, refer to the FR-A802-P Instruction Manual (Hardware).

● Converter unit (FR-CC2-P)

◆ When the sink logic is selected

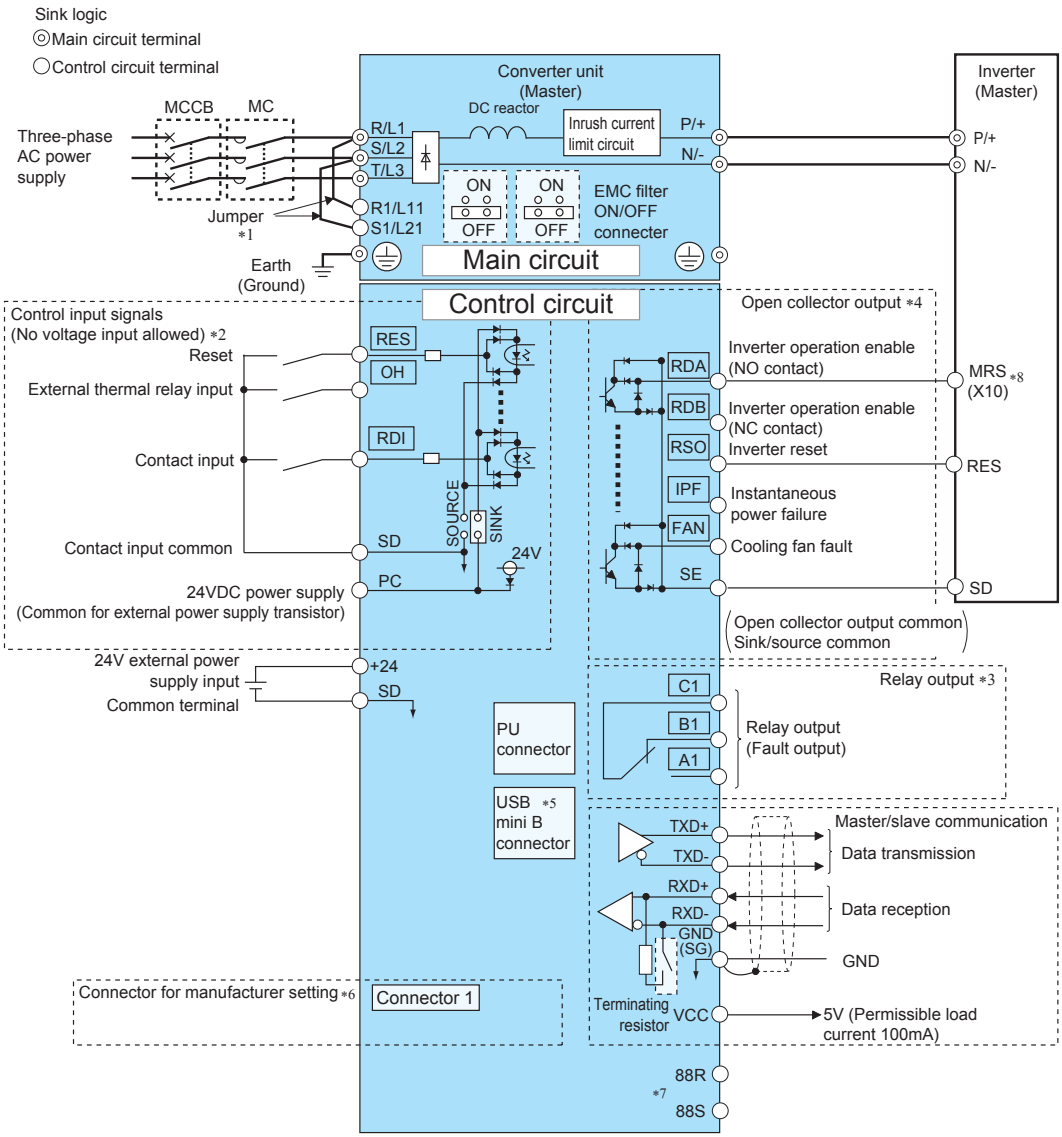

*1 When using separate power supply for the control circuit, remove the jumpers from R1/L11 and S1/L21.
*2 The function of these terminals can be changed with the input terminal assignment (**Pr.178, Pr.187, Pr.189**).
*3 The function of these terminals can be changed with the output terminal assignment (**Pr.195**).
*4 The function of these terminals can be changed with the output terminal assignment (**Pr.190 to Pr.194**).
*5 The connector is for manufacturer setting. Do not use.
*6 Plug-in options cannot be used.
*7 For manufacturer setting. Do not use.
*8 To use the RDA signal of the converter unit, select the NC contact input specification for the input logic of MRS signal or X10 signal of the inverter.
To use the RDB signal of the converter unit, select the NO contact input specification for the input logic of MRS signal or X10 signal of the inverter. (For changing the input logic, refer to the Instruction Manual of the inverter.)

NOTE

- For the system configuration for the parallel operation, refer to the FR-CC2-P Instruction Manual.

● Connection of motor with encoder (vector control) (when the sink logic is selected and the FR-A8AP is used)

◆ Speed control

Standard motor with encoder (SF-JR) and 5 V differential line driver	Vector control dedicated motor (SF-V5RU, SF-THY) and 12 V complementary
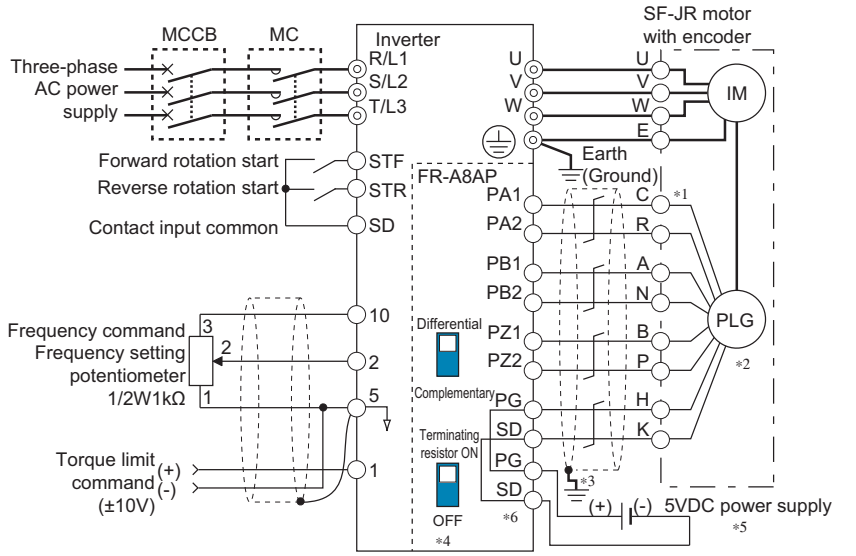	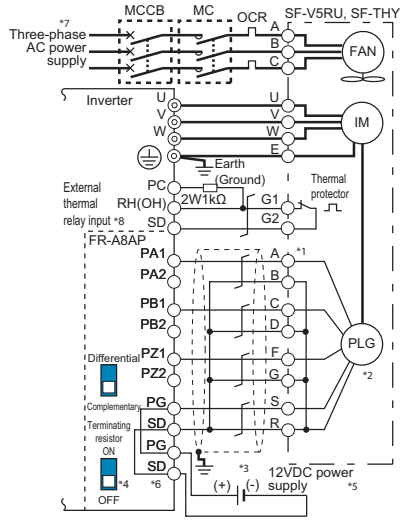

◆ Torque control

Standard motor with encoder (SF-JR) and 5 V differential line driver	Vector control dedicated motor (SF-V5RU, SF-THY) and 12 V complementary
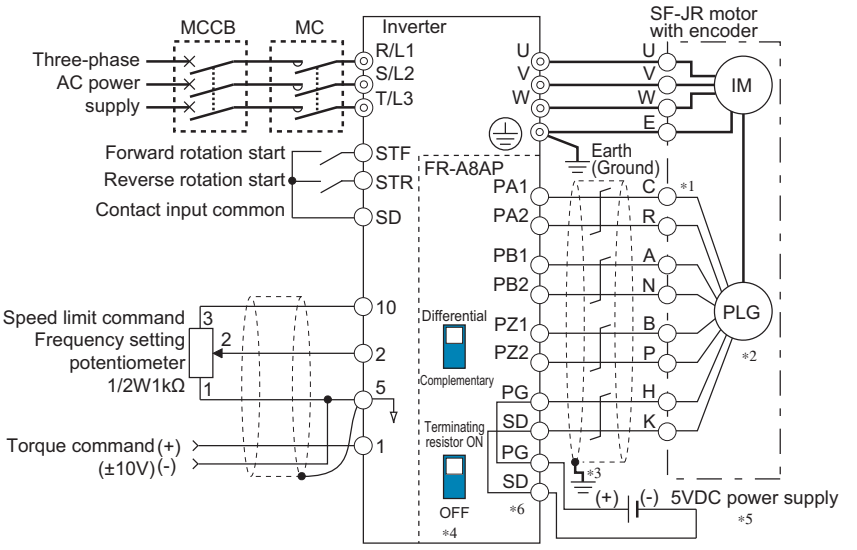	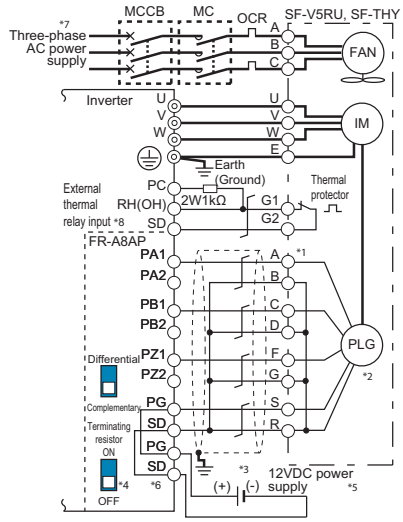

◆ Position control

Vector control dedicated motor (SF-V5RU, SF-THY) and 12 V complementary

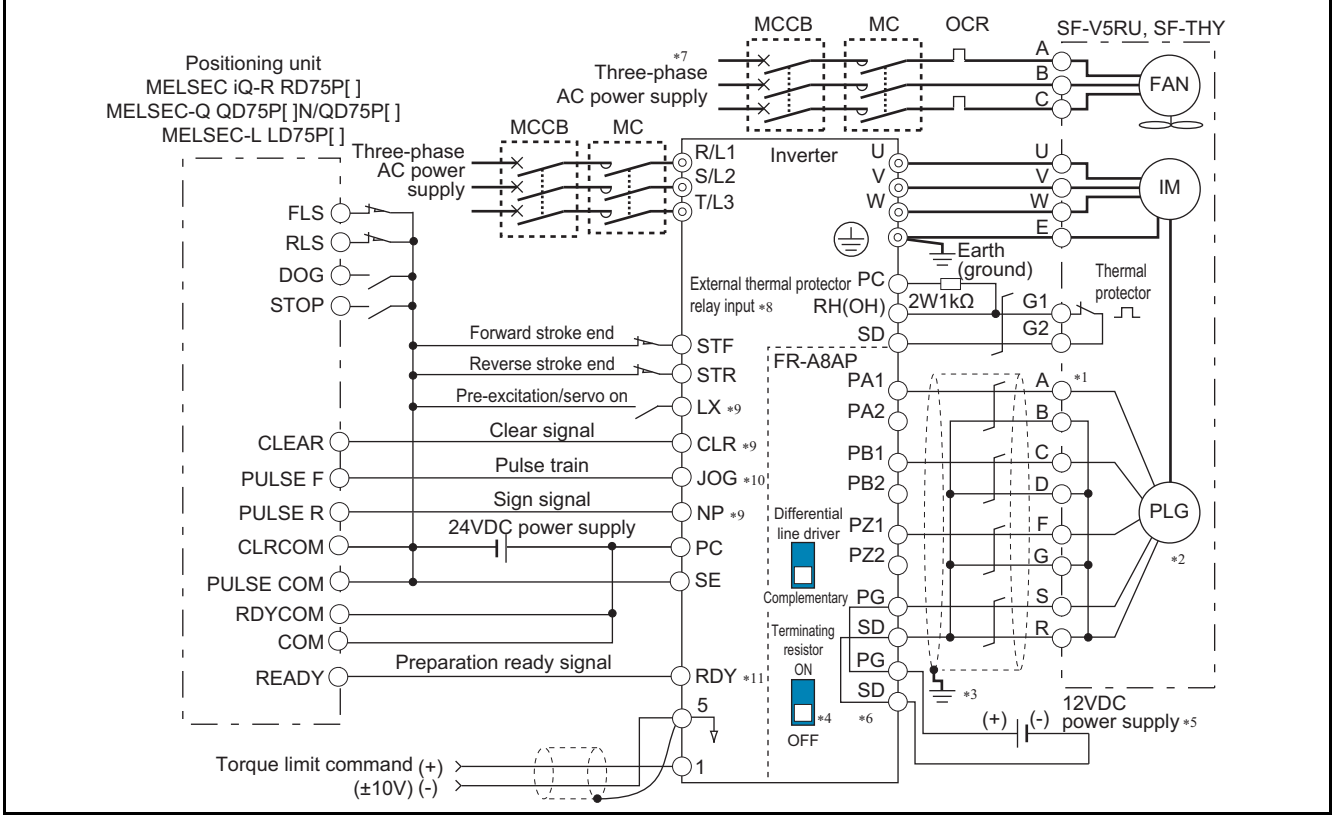

*1 The pin number differs according to the encoder used.
Speed, control, torque control, and position control by pulse train input are available with or without the Z-phase being connected.

*2 Connect the encoder so that there is no looseness between the motor and motor shaft. Speed ratio must be 1:1.

*3 Earth (ground) the shield of the encoder cable to the enclosure using a tool such as a P-clip. (Refer to the Instruction Manual (Detailed).)

*4 For the complementary, set the terminating resistor selection switch to OFF position. (Refer to the Instruction Manual (Detailed).)

*5 A separate power supply of 5 V/12 V/15 V/24 V is necessary according to the encoder power specification.
When the encoder output is the differential line driver type, only 5 V can be input.
Make the voltage of the external power supply the same as the encoder output voltage, and connect the external power supply across PG and SD.

*6 For terminal compatibility of the FR-JCBL, FR-V7CBL, and FR-A8AP, refer to the Instruction Manual (Detailed).

*7 For the fan of the 7.5 kW or lower dedicated motor, the power supply is single phase. (200 V/50 Hz, 200 to 230 V/60 Hz)

*8 Connect the recommended 2W1kΩ resistor between terminals PC and OH. (Recommended product: MOS2C102J 2W1kΩ by KOA Corporation)
Insert the input line and the resistor to a 2-wire blade terminal, and connect the blade terminal to terminal OH.
Insulate the lead wire of the resistor, for example by applying a contraction tube, and shape the wires so that the resistor and its lead wire will not touch other cables. Caulk the lead wire securely together with the thermal protector input line using a 2-wire blade terminal.
(Do not subject the lead wire's bottom area to an excessive pressure.)
To use a terminal as terminal OH, assign the OH (external thermal O/L relay input) signal to an input terminal. (Set "7" in any of **Pr.178** to **Pr.189**. For details, refer to **page 146**.)

When OH signal is assigned to terminal RH
(**Pr.182** = "7")

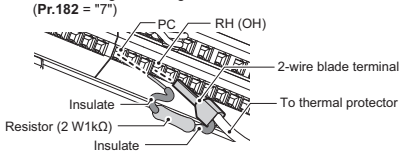

*9 Assign the function using **Pr.178 to Pr.184, Pr.187 to Pr.189 (input terminal function selection)**.

*10 When position control is selected, terminal JOG function is invalid and simple position pulse train input terminal becomes valid.

*11 Assign the function using **Pr.190 to Pr.194 (output terminal function selection)**.

Terminal Specification Explanation

● Inverter

indicates that terminal functions can be selected from **Pr.178 to Pr.196 (I/O terminal function selection)**.
Terminal names and terminal functions are those of the factory set.

Type		Terminal Symbol	Terminal Name	Description	
Main circuit		R/L1, S/L2, T/L3*1	AC power input	Connect to the commercial power supply.	
		U, V, W	Inverter output	Connect a three-phase squirrel-cage motor or PM motor.	
		R1/L11, S1/L21*2	Power supply for control circuit	Connected to the AC power supply terminals R/L1 and S/L2. To retain alarm display and alarm output, apply external power to this terminal.	
		P/+, PR *1*2	Brake resistor connection	Connect an optional brake resistor across terminals P/+ and PR. Remove the jumper across terminals PR and PX for the inverter capacity that has terminal PX. (FR-A820-00630(11K) or lower, FR-A840-00380(15K) or lower)	
		P3, PR *1*2	Brake resistor connection	Connect an optional brake resistor across terminals P3 and PR. (FR-A820-00770(15K) to 01250(22K), FR-A840-00470(18.5K) to 01800(55K))	
		P/+, N/-	Brake unit connection	Connect the brake unit (FR-BU2), power regeneration common converter (FR-CV), power regeneration converter (MT-RC), high power factor converter (FR-HC2), multifunction regeneration converter (FR-XC), or DC power supply (under DC feeding mode). Do not connect the DC power supply between terminals P3 and N/-. Use terminals P/+ and N/- for DC feeding. Connect the separated converter type to terminals P/+ and N/- of the converter unit. (Wire one terminal P/+ to another terminal P/+, and do likewise for terminal N/-.)	
		P3, N/-	Brake unit connection*3		
		P/+, P1*1	DC reactor connection	Remove the jumper across terminals P/+-P1 and connect a DC reactor. For the FR-A820-03800(75K) or higher, the FR-A840-02160(75K) or higher, and when a 75 kW or higher motor is used, always connect a DC reactor, which is available as an option. (The jumper is not installed for the FR-A820-03800(75K) or higher and the FR-A840-02160(75K) or higher.)	
		PR, PX *1*2	Built-in brake circuit connection	When the jumper is connected across terminals PX and PR (initial status), the built-in brake circuit is valid. The built-in brake circuit is equipped in the FR-A820-00490(7.5K) or lower and FR-A840-00250(7.5K) or lower.	
		⏚	Earth (Ground)	For earthing (grounding) the inverter chassis. Must be earthed (grounded).	
Control circuit/input signal	Contact input	STF	Forward rotation start	Turn on the STF signal to start forward rotation and turn it off to stop.	When the STF and STR signals are turned on simultaneously, the stop command is given.
		STR	Reverse rotation start	Turn on the STR signal to start reverse rotation and turn it off to stop.	
		STP (STOP)	Start self-holding selection	Turn on the STOP signal to self-hold the start signal.	
		RH, RM, RL	Multi-speed selection	Multi-speed can be selected according to the combination of RH, RM and RL signals.	
		JOG	Jog mode selection	Turn on the JOG signal to select Jog operation (initial setting) and turn on the start signal (STF or STR) to start Jog operation.	
			Pulse train input	JOG terminal can be used as pulse train input terminal. To use as pulse train input terminal, the **Pr.291** setting needs to be changed. (maximum input pulse: 100k pulses/s)	
		RT	Second function selection	Turn on the RT signal to select second function selection When the second function such as "Second torque boost" and "Second V/F (base frequency)" are set, turning on the RT signal selects these functions.	
		MRS	Output stop	Turn on the MRS signal (2 ms or more) to stop the inverter output. Use to shut off the inverter output when stopping the motor by electromagnetic brake.	
		MRS (X10)*8	Output stop (Inverter operation enable)	Connect to terminal RDA of the converter unit (FR-CC2). When the RDA signal is turned OFF, the inverter output is shut off. The X10 signal (NC contact) is assigned to terminal MRS in the initial setting. Use **Pr.599** to change the specification to NO contact.	
		RES	Reset	Used to reset alarm output provided when protective circuit is activated. Turn on the RES signal for more than 0.1s, then turn it off. Recover about 1s after reset is cancelled.	
		AU	Terminal 4 input selection	Terminal 4 is made valid only when the AU signal is turned on. Turning the AU signal on makes terminal 2 invalid.	
		CS	Selection of automatic restart after instantaneous power failure	When the CS signal is left on, the inverter restarts automatically at power restoration. Note that restart setting is necessary for this operation. In the initial setting, a restart is disabled.	
		SD	Contact input common (sink)*4	Common terminal for the contact input terminal (sink logic) and terminal FM.	
			External transistor common (source)*5	Connect this terminal to the power supply common terminal of a transistor output (open collector output) device, such as a programmable controller, in the source logic to avoid malfunction by undesirable current.	
			24 VDC power supply common	Common terminal for the 24 VDC power supply (terminal PC, terminal +24) Isolated from terminals 5 and SE.	
		PC	External transistor common (sink)*4	Connect this terminal to the power supply common terminal of a transistor output (open collector output) device, such as a programmable controller, in the sink logic to avoid malfunction by undesirable currents.	
			Contact input common (source)*5	Common terminal for contact input terminal (source logic).	
			24 VDC power supply	Can be used as 24 VDC 0.1 A power supply.	
	Frequency setting	10E	Frequency setting power supply	When connecting a frequency setting potentiometer at an initial status, connect it to terminal 10. Change the input specifications of terminal 2 when connecting it to terminal 10E.	10 VDC ±0.4 V, permissible load current 10 mA
		10			5 VDC ±0.5 V, permissible load current 10 mA
		2	Frequency setting (voltage)	Inputting 0 to 5 VDC (or 0 to 10 V, 4 to 20 mA) provides the maximum output frequency at 5 V (10 V, 20 mA) and makes input and output proportional. Use **Pr.73** to switch from among input 0 to 5 VDC (initial setting), 0 to 10 VDC, and 4 to 20 mA. Set the voltage/current input switch in the ON position to select current input (0 to 20 mA).	Voltage input: Input resistance 10 kΩ ±1 kΩ Maximum permissible voltage 20 VDC Current input: Input resistance 245 Ω ±5 Ω Maximum permissible current 30 mA
		4	Frequency setting (current)	Inputting 4 to 20 mADC (or 0 to 5 V, 0 to 10 V) provides the maximum output frequency at 20 mA and makes input and output proportional. This input signal is valid only when the AU signal is on (terminal 2 input is invalid). Use **Pr.267** to switch from among input 4 to 20 mA (initial setting), 0 to 5 VDC, and 0 to 10 VDC. Set the voltage/current input switch in the OFF position to select voltage input (0 to 5 V/0 to 10 V). Use **Pr.858** to switch terminal functions.	
		1	Frequency setting auxiliary	Inputting 0 to ±5 VDC or 0 to ±10 VDC adds this signal to terminal 2 or 4 frequency setting signal. Use **Pr.73** to switch between input 0 to ±5 VDC and 0 to ±10 VDC (initial setting) input.	Input resistance 10 kΩ ±1 kΩ Maximum permissible voltage ±20 VDC
		5	Frequency setting common	Common terminal for frequency setting signal (terminal 2, 1 or 4) and analog output terminal AM, CA. Do not earth (ground).	
	Thermistor	10 2	PTC thermistor input	For receiving PTC thermistor outputs. When PTC thermistor is valid (**Pr.561** ≠ "9999"), terminal 2 is not available for frequency setting.	Applicable PTC thermistor specification Overheat detection resistance: 500 Ω to 30 kΩ (Set by **Pr.561**)
	Power supply input	+24	24 V external power supply input	For connecting 24 V external power supply. If the 24 V external power supply is connected, power is supplied to the control circuit while the main power circuit is OFF.	Input voltage 23 to 25.5 VDC Input current 1.4 A or less

Type		Terminal Symbol	Terminal Name	Description		
Control circuit/output signal	Relay	A1, B1, C1	Relay output 1 (alarm output)	1 changeover contact output indicates that the inverter protective function has activated and the output stopped. Alarm: discontinuity across B-C (continuity across A-C), Normal: continuity across B-C (discontinuity across A-C)		Contact capacity 230 VAC 0.3 A (power factor =0.4) 30 VDC 0.3 A
		A2, B2, C2	Relay output 2	1 changeover contact output		
	Open collector	RUN	Inverter running	Switched low when the inverter output frequency is equal to or higher than the starting frequency (initial value 0.5 Hz). Switched high during stop or DC injection brake operation.		Permissible load 24 VDC (maximum 27 VDC) 0.1 A (The voltage drop is 2.8 V at maximum while the signal is ON.) LOW is when the open collector output transistor is ON (conducted). HIGH is when the transistor is OFF (not conducted).
		SU	Up to frequency	Switched low when the output frequency reaches within the range of ±10% (initial value) of the set frequency. Switched high during acceleration/deceleration and at a stop.	Alarm code (4 bit) output **(Refer to page 133.)**	
		OL	Overload alarm	Switched low when stall prevention is activated by the stall prevention function. Switched high when stall prevention is cancelled.		
		IPF	Instantaneous power failure	Switched low when an instantaneous power failure and under voltage protections are activated.		
		IPF*8	Open collector output	No function is assigned in the initial setting. The function can be assigned setting **Pr.192**.		
		FU	Frequency detection	Switched low when the inverter output frequency is equal to or higher than the preset detected frequency and high when less than the preset detected frequency.		
		SE	Open collector output common	Common terminal for terminals RUN, SU, OL, IPF, FU		
	Pulse	FM*6	For meter	Select one e.g. output frequency from monitor items. (The signal is not output during an inverter reset.) The output signal is proportional to the magnitude of the corresponding monitoring item. The output signal is proportional to the magnitude of the corresponding monitoring item.Use **Pr.55**, **Pr.56**, and **Pr.866** to set full scales for the monitored output frequency, output current, and torque.	Output item: output frequency (initial setting), permissible load current 2 mA, For full scale1440 pulses/s	
			NPN open collector output		Signals can be output from the open collector terminals by setting **Pr.291**. (maximum output pulse: 50kpulses/s)	
	Analog	AM	Analog voltage output		Output item: output frequency (initial setting), output signal 0 to ±10 VDC, permissible load current 1 mA (load impedance 10 kΩ or more), resolution 8 bit	
		CA*7	Analog current output		Output item: output frequency (initial setting), Load impedance 200 Ω to 450 Ω Output signal 0 to 20 mADC	
Communication		—	PU connector	With the PU connector, communication can be made through RS-485. (1:1 connection only) • Conforming standard: EIA-485(RS-485) • Transmission format: Multi-drop link • Communication speed: 4800 to 115200 bps • Wiring length: 500 m		
	RS-485 terminals	TXD+, TXD-	Inverter transmission terminal	With the RS-485 terminals, communication can be made through RS-485. (The FR-A800-E inverter does not have the interface.) • Conforming standard: EIA-485(RS-485) • Transmission format: Multi-drop link • Communication speed: 300 to 115200 bps • Overall extension: 500 m Two inverters in parallel connection have the RS-485 communication via the RS-485 terminals on each inverter. (FR-A842-P) • Total wiring length: 5 m or less		
		RXD+, RXD-	Inverter reception terminal			
		GND (SG)	Earth (Ground)			
	—		USB A connector	A connector (receptacle). A USB memory device enables parameter copies and the trace function.		Interface: Conforms to USB1.1 (USB2.0 full-speed compatible). Transmission speed: 12 Mbps
			USB B connector	Mini B connector (receptacle). Connected to a personal computer via USB to enable setting, monitoring, test operations of the inverter by FR Configurator2.		
	CC-Link IE	CON1	Connector for communication (Port 1)	Communication can be made via the CC-Link IE TSN or CC-Link IE Field Network. (The FR-A800-GN or FR-A800-GF has the interface. For the other inverters, the communication option FR-A8NCG or FR-A8NCE is available.)		
		CON2	Connector for communication (Port 2)			
	—		Ethernet connector	Using Ethernet communication, the inverter's status can be monitored or the parameters can be set via Internet. (Only the FR-A800-E inverter has the interface.)		
Safety stop signal*9		S1	Safety stop input (Channel 1)	Terminals S1 and S2 are used for the safety stop input signal for the safety relay module. Terminals S1 and S2 are used at the same time (dual channel). Inverter output is shutoff by shortening/opening between terminals S1 and SIC, or between S2 and SIC. In the initial status, terminals S1 and S2 are shorted with terminal PC by shorting wires. Terminal SIC is shorted with terminal SD. Remove the shorting wires and connect the safety relay module when using the safety stop function.		Input resistance 4.7 kΩ Input current 4 to 6 mADC (with 24 VDC input)
		S2	Safety stop input (Channel 2)			
		SIC	Safety stop input terminal common	Common terminal for terminals S1 and S2.		—
		So (SO)	Safety monitor output (open collector output)	Indicates the safety stop input signal status. Switched to LOW when the status is other than the internal safety circuit failure. Switched to HIGH during the internal safety circuit failure status. (LOW is when the open collector output transistor is ON (conducted). HIGH is when the transistor is OFF (not conducted).) Refer to the Safety Stop Function Instruction Manual (BCN-A23228-001) when the signal is switched to HIGH while both terminals S1 and S2 are open.		Permissible load 24 VDC (maximum 27 VDC) 0.1 A (The voltage drop is 3.4 V at maximum while the signal is ON.)
		SOC	Safety monitor output terminal common	Common terminal for terminal So (SO).		—

*1 Terminals R/L1, S/L2, T/L3, PR, P3, P1, and PX are not provided in the separated converter type.
*2 Terminals R1/L11, S1/L21, PR, P3, and PX are not provided for the IP55 compatible model.
*3 Available for the FR-A820-00770(15K) to FR-A820-01250(22K), and the FR-A840-00470(18.5K) to FR-A840-01800(55K).
*4 The sink logic is initially set for the FM-type inverter.
*5 The source logic is initially set for the CA-type inverter.
*6 Terminal FM is provided in the FM-type inverter.
*7 Terminal CA is provided in the CA-type inverter.
*8 Function and name of the separated converter type.
*9 The terminals are for manufacturer setting for the FR-A842-P. Do not connect anything to these. Doing so may damage the inverter. Do not remove the shorting wires across the terminals S1 and PC, the terminals S2 and PC, and the terminals SIC and SD. Removing either shorting wire disables the inverter operation.

● Converter unit (FR-CC2)

[ ] indicates that terminal functions can be selected from **Pr.178, Pr.187, Pr.189 to Pr.195 (I/O terminal function selection)**.
Terminal names and terminal functions are those of the factory set.

Type		Terminal Symbol		Terminal Name	Description	
Main circuit		R/L1, S/L2, T/L3 (R2/L12, S2/L22, T2/L32)		AC power input	Connect these terminals to the commercial power supply. For 12-phase applications, use these terminals for connection with a 12-phase rectifier power transformer (3-winding transformer). For details, refer to the Instruction Manual of the converter unit.	
Main circuit		R1/L11,S1/L21		Power supply for the control circuit	Connected to the AC power supply terminals R/L1 and S/L2. To retain the fault display and fault output, remove the jumpers across terminals R/L1 and R1/L11 and across S/L2 and S1/L21 and supply external power to these terminals.	
Main circuit		P/+, N/-		Inverter connection	Connect to terminals P/+ and N/- of the inverter. (Wire one terminal P/+ to another terminal P/+, and do likewise for terminal N/-.)	
Main circuit		⏚		Earth (ground)	For earthing (grounding) the converter unit chassis. This must be earthed (grounded).	
Control circuit/input signal	Contact input	RES		Reset	Use this signal to reset a fault output provided when a protective function is activated. Turn ON the RES signal for 0.1 s or longer, then turn it OFF. In the initial setting, reset is always enabled. By setting **Pr.75**, reset can be set enabled only at fault occurrence of the converter unit. The inverter recovers about 1 s after the reset is released.	
Control circuit/input signal	Contact input	OH		External thermal relay input	The external thermal relay input (OH) signal is used when using an external thermal relay or a thermal protector built into the motor to protect the motor from overheating. When the thermal relay is activated, the inverter trips by the external thermal relay operation (E.OHT).	
Control circuit/input signal	Contact input	RDI		Contact input	The function can be assigned by setting **Pr.178**.	
Control circuit/input signal	Contact input	SD		Contact input common (sink) (Initial setting)	Common terminal for contact input terminal (sink logic).	
Control circuit/input signal	Contact input	SD		External transistor common (source)	Connect this terminal to the power supply common terminal of a transistor output (open collector output) device, such as a programmable controller, in the source logic to avoid malfunction by undesirable current.	
Control circuit/input signal	Contact input	SD		24 VDC power supply common	Common terminal for the 24 VDC power supply (terminal PC, terminal +24) Isolated from terminals 5 and SE.	
Control circuit/input signal	Contact input	PC		External transistor common (sink) (Initial setting)	Connect this terminal to the power supply common terminal of a transistor output (open collector output) device, such as a programmable controller, in the source logic to avoid malfunction by undesirable current.	
Control circuit/input signal	Contact input	PC		Contact input common (source)	Common terminal for contact input terminal (source logic).	
Control circuit/input signal	Contact input	PC		24 VDC power supply common	Can be used as a 24 VDC 0.1 A power supply.	
Control circuit/input signal	Power supply input	+24		24 V external power supply input	For connecting a 24 V external power supply. If a 24 V external power supply is connected, power is supplied to the control circuit while the main power circuit is OFF.	
Control circuit/output signal	Relay	A1, B1, C1		Relay output 1 (fault output)	1 changeover contact output that indicates that the protective function of the converter unit has been activated and the outputs are stopped. Fault: discontinuity across B and C (continuity across A and C), Normal: continuity across Band C (discontinuity across A and C)	Contact capacity 230 VAC 0.3 A (power factor = 0.4) 30 VDC 0.3 A
Control circuit/output signal	Relay	88R, 88S		For manufacturer setting. Do not use.		
Control circuit/output signal	Open collector	RDA		Inverter operation enable (NO contact)	Switched to LOW when the converter unit operation is ready. Assign the signal to terminal MRS (X10) of the inverter. The inverter can be started when the RDA status is LOW.	Permissible load 24 VDC (maximum 27 VDC) 0.1 A (The voltage drop is 2.8 V at maximum while the signal is ON.) LOW is when the open collector output transistor is ON (conducted). HIGH is when the transistor is OFF (not conducted).
Control circuit/output signal	Open collector	RDB		Inverter operation enable (NC contact)	Switched to LOW when a converter unit fault occurs or the converter is reset. The inverter can be started when the RDB status is HIGH.	
Control circuit/output signal	Open collector	RSO		Inverter reset	Switched to LOW when the converter is reset (RES-ON). Assign the signal to terminal RES of the inverter. The inverter is reset when it is connected with the RSO status LOW.	
Control circuit/output signal	Open collector	IPF		Instantaneous power failure	Switched to LOW when an instantaneous power failure is detected.	
Control circuit/output signal	Open collector	FAN		Cooling fan fault	Switched to LOW when a cooling fan fault occurs.	
Control circuit/output signal	Open collector	SE		Open collector output common	Common terminal for terminals RDA, RDB, RSO, IPF, FAN	
Communication		—		PU connector	With the PU connector, communication can be made through RS-485. (For connection on a 1:1 basis only) • Conforming standard: EIA-485 (RS-485) • Transmission format: Multidrop link • Communication speed: 4800 to 115200 bps • Wiring length: 500 m	
Communication		RS-485 terminals	TXD+	Converter unit transmission terminal	The RS-485 terminals enable the communication by RS-485. • Conforming standard: EIA-485 (RS-485) • Transmission format: Multidrop link • Communication speed: 300 to 115200 bps • Overall length: 500 m Two inverters in parallel connection have the RS-485 communication via the RS-485 terminals on each inverter. (FR-CC2-P) • Total wiring length : 5 m or less	
Communication		RS-485 terminals	TXD-			
Communication		RS-485 terminals	RXD+	Converter unit reception terminal		
Communication		RS-485 terminals	RXD-			
Communication		RS-485 terminals	GND (SG)	Earthing (grounding)		

Operation Panel (FR-DU08(-01))

● Components of the operation panel

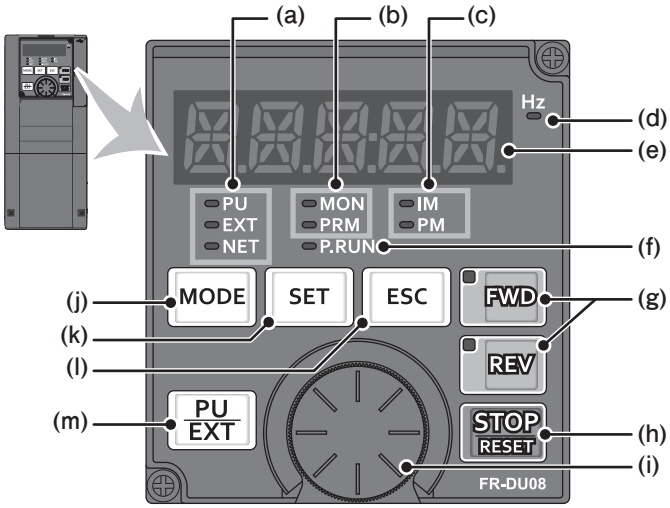

The operation panel of the inverter can be used for the converter unit.

No.	Component *1		Name	Description
(a)	FR-DU08 PU EXT NET	FR-DU08-01 HAND AUTO NET	Operation mode indicator *2	PU/HAND: ON when the inverter is in the PU operation mode. EXT/AUTO: ON when the inverter is in the External operation mode. (ON when the inverter in the initial setting is powered ON.) NET: ON when the inverter is in the Network operation mode. PU and EXT: ON when the inverter is in the External/PU combined operation mode 1 or 2.
(b)	MON PRM		Operation panel status indicator	MON: ON when the operation panel is in the monitoring mode. Quickly blinks twice intermittently while the protective function is activated. PRM: ON when the operation panel is in the parameter setting mode.
(c)	IM PM		Control motor indicator *2	IM: ON when the inverter is set to control the induction motor. PM: ON to indicate the PM motor control. The indicator blinks during test operation.
(d)	Hz		Frequency unit indicator *2	ON when the actual frequency is monitored. (Blinks when the set frequency is monitored.)
(e)			Monitor (5-digit LED)	Shows a numeric value (readout) of a monitor item such as the frequency or a parameter number.(The monitor item can be changed according to the settings of Pr.52, Pr.774 to Pr.776.)
(f)	P.RUN		PLC function indicator *2	ON when the PLC function of the inverter is valid.
(g)	FWD REV		FWD key, REV key *2	FWD key: Starts forward rotation operation. Its LED is ON during forward operation. REV key: Starts reverse rotation operation. Its LED is ON during reverse operation. Either LED blinks under the following conditions. • When the frequency command is not given even if the forward/reverse command is given. • When the frequency command is equal to the starting frequency or lower. • When the MRS signal is being input.
(h)	STOP RESET		STOP/RESET key	Stops the operation commands. Used to reset the inverter when the protection function is activated.
(i)			Setting dial	The setting dial of the Mitsubishi Electric inverters. Turn the setting dial to change the setting of frequency or parameter, etc. Press the setting dial to perform the following operations: • To display a set frequency in the monitoring mode (The monitor item shown on the display can be changed by using Pr.992.) • To display the present setting during calibration • To display a fault history number in the fault history mode
(j)	MODE		MODE key	Switches the operation panel to a different mode. The easy setting of the inverter operation mode is enabled by pressing this key simultaneously with PU EXT. Every key on the operation panel becomes inoperable by holding this key for 2 seconds. The key inoperable function is invalid when Pr.161="0 (initial setting)". (Refer to the FR-A800 Instruction Manual (Detailed).)
(k)	SET		SET key	Confirms each selection. When this key is pressed during inverter operation, the monitor item changes. Initial setting in the monitor mode Output frequency → Output current → Output voltage (The monitor item can be changed according to the settings of Pr.52, Pr.774 to Pr.776.)
(l)	ESC		ESC key	Goes back to the previous display. Holding this key for a longer time changes the display back to the monitor mode.
(m)	FR-DU08 PU EXT	FR-DU08-01 HAND AUTO	PU/EXT key *2	Switches between the PU operation mode, the PUJOG operation mode, and the External operation mode. Switches to the easy setting mode by pressing simultaneously with MODE. Also cancels the PU stop warning.

*1 The FR-DU08-01 is an operation panel for IP55 compatible models.
*2 Not available for the converter unit.

Basic operation(FR-DU08)

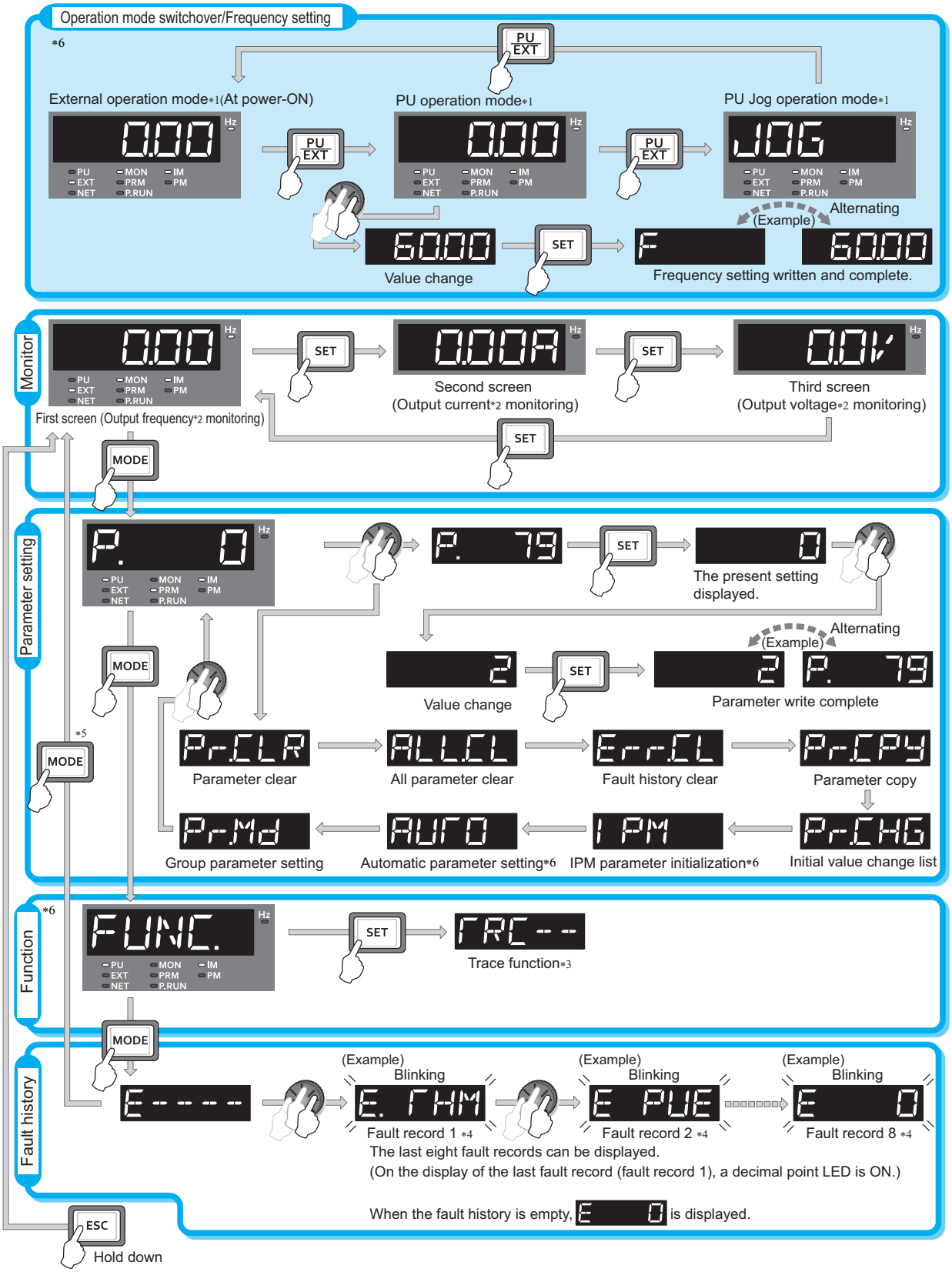

*1 For the details of operation modes, refer to **page 134**.
*2 The monitor items can be changed.(Refer to **page 125**.)
*3 For the details of the trace function, refer to **page 174**.
*4 While a fault is displayed, the display shifts as follows by pressing SET: Output frequency at the fault → Output current → Output voltage → Energization time → Year → Month → Date → Time. (After Time, it goes back to a fault display.) Pressing the setting dial shows the fault history number.
*5 The USB memory mode will appear if a USB memory device is connected. (Refer to **page 69**.)
*6 Not available for the converter unit.

Parameter copy to the USB memory device

Insert the USB memory in the inverter. The USB memory mode is displayed and USB memory operations are possible.

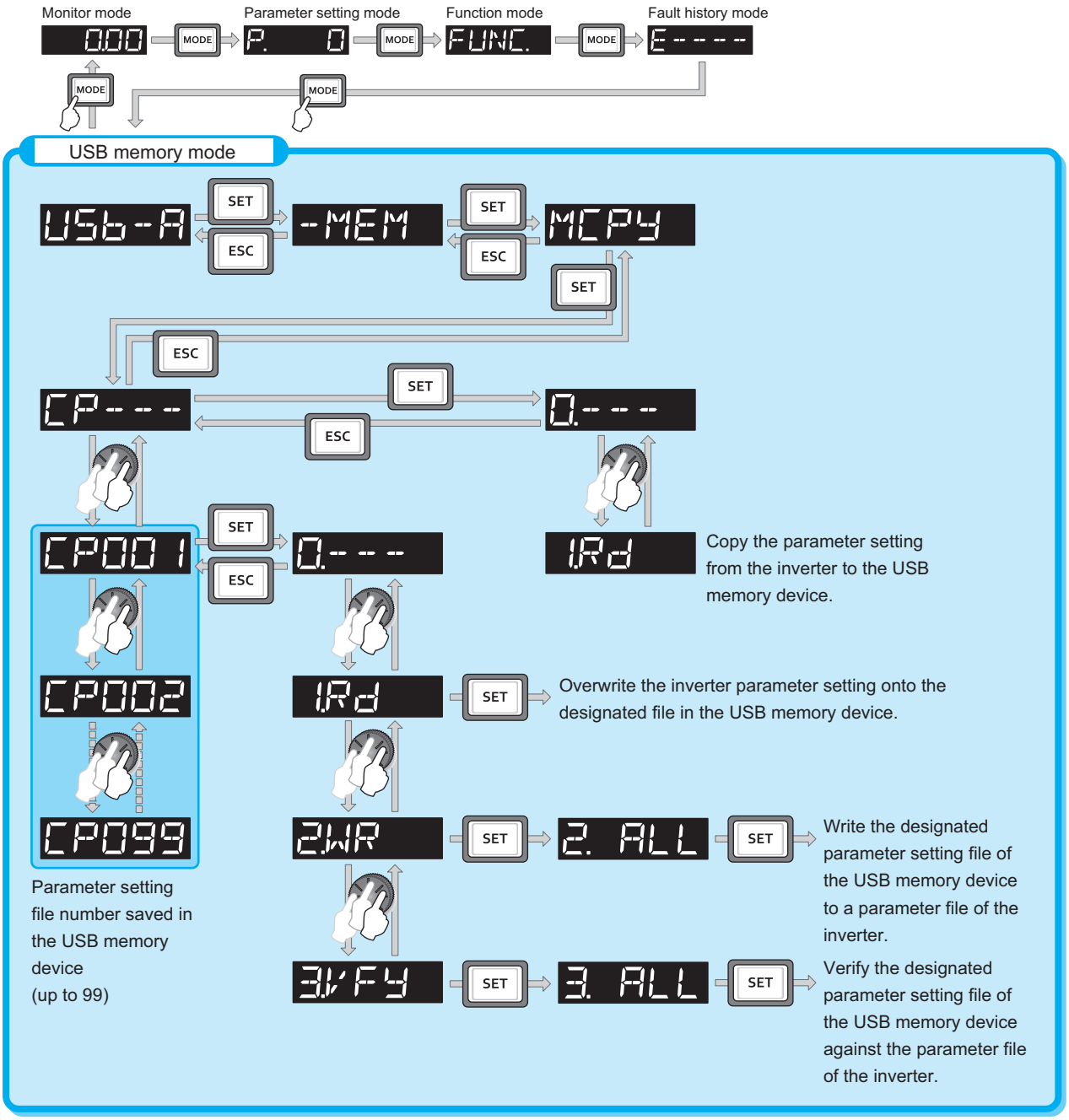

● Group parameter display

Parameter numbers can be changed to grouped parameter numbers.
Parameters are grouped by their functions. The related parameters can be set easily.

(1) Changing to the grouped parameter numbers

Pr.MD setting value	Description
0	No change
1	Parameter display by parameter number
2	Parameter display by function group

Operation

1. Turning ON the power of the inverter
The operation panel is in the monitor mode.

2. Selecting the parameter setting mode
Press [MODE] to choose the parameter setting mode. (The parameter number read previously appears.)

3. Selecting the parameter
Turn ⊛ until "Pr.Md" (parameter display method) appears.
Press [SET]. "0" (initial value) will appear.

4. Selecting the use of the function group number
Turn ⊛ to change the set value to "2" (group parameter display). Press [SET] to select the group parameter setting. "2" and "Pr.Md" are displayed alternately after the setting is completed.

(2) Changing parameter settings in the group parameter display

Changing example | Change the **P.H400(Pr.1) Maximum frequency**.

Operation

1. Turning ON the power of the inverter
The operation panel is in the monitor mode.

2. Changing the operation mode
Press [PU EXT] to choose the PU operation mode. [PU] indicator is lit.

3. Selecting the parameter setting mode
Press [MODE] to choose the parameter setting mode. (The parameter number read previously appears.)

4. Enabling the function group selection
Press [ESC] several times until "PAD . ." appears.
(No need to press [ESC] if the previously read parameter is one of "Pr.CLR" to "Pr.Md". Skip this operation and proceed to step 5..)

5. Enabling the function group selection
Turn ⊛ until "PH4 . ." (protective function parameter 4) appears. Press [SET] to display "PH4 - - " and make the group parameters of the protective function parameter 4 selectable.

6. Selecting the parameter
Turn ⊛ until "PH400" (P.H400 Maximum frequency) appears. Press [SET] to read the present set value.
" 120.00" (initial value) appears.

7. Changing the setting value
Turn ⊛ to change the set value to "60.00". Press [SET] to enter the setting. "60.00" and "PH400" are displayed alternately after the setting is completed.

LCD operation panel (FR-LU08(-01))

- The FR-LU08 is an optional operation panel adopting an LCD panel capable of displaying text and menus.
- Replacement with the operation panel (FR-DU08) and installation on the enclosure surface using a connection cable (FR-CB2) are possible. (To connect the FR-LU08, an optional operation panel connection connector (FR-ADP) is required.)
- Parameter settings for up to three inverters can be saved.
- When the FR-LU08 is connected to the inverter, the internal clock of the inverter can be synchronized with the clock of FRLU08. (Real time clock function)
  With a battery (CR1216), the FR-LU08 time count continues even if the main power of the inverter is turned OFF. (The time count of the inverter internal clock does not continue when the inverter power is turned OFF.)
- The FR-LU08-01 meets the IP55 rating (except for the PU connector). It can be directly installed to the IP55 compatible model.

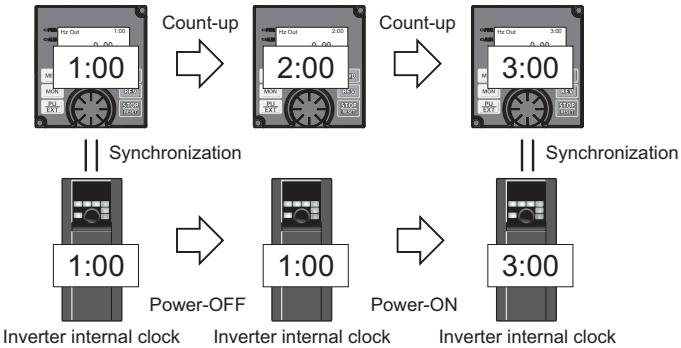

Appearance and parts name

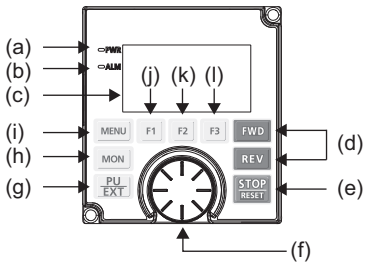

Symbol	Name	Description
a	Power lamp	ON when the power is turned ON.
b	Alarm lamp	ON when an inverter alarm occurs.
c	Monitor	Shows the frequency, parameter number, etc. (Using **Pr.52, Pr.774 to Pr.776**, the monitored item can be changed.)
d	FWD key, REV key	FWD key: Starts the forward operation. REV key: Starts the reverse operation.
e	STOP/RESET key	Used to stop operation commands. Used to reset the inverter when the protective function is activated.
f	Setting dial	The setting dial is used to change the frequency and parameter settings. Pressing the dial shows details of the fault history mode.
g	PU/EXT key *1	Switches between the PU mode, the PUJOG mode, and the External operation mode.
h	MON key	Shows the first monitored item.
i	MENU key	Displays the quick menu. Pressing the key while the quick menu is displayed displays the function menu.
j	Software key (F1)	Select a guidance displayed on the monitor.
k	Software key (F2)	
l	Software key (F3)	

*1 HAND/AUTO key for the FR-LU08-01.

Switching the main monitor data

When **Pr.52 Operation panel main monitor selection** is set to "0", by pressing F1 (PREV) or F3 (NEXT) 6 types of monitor data are displayed in order.

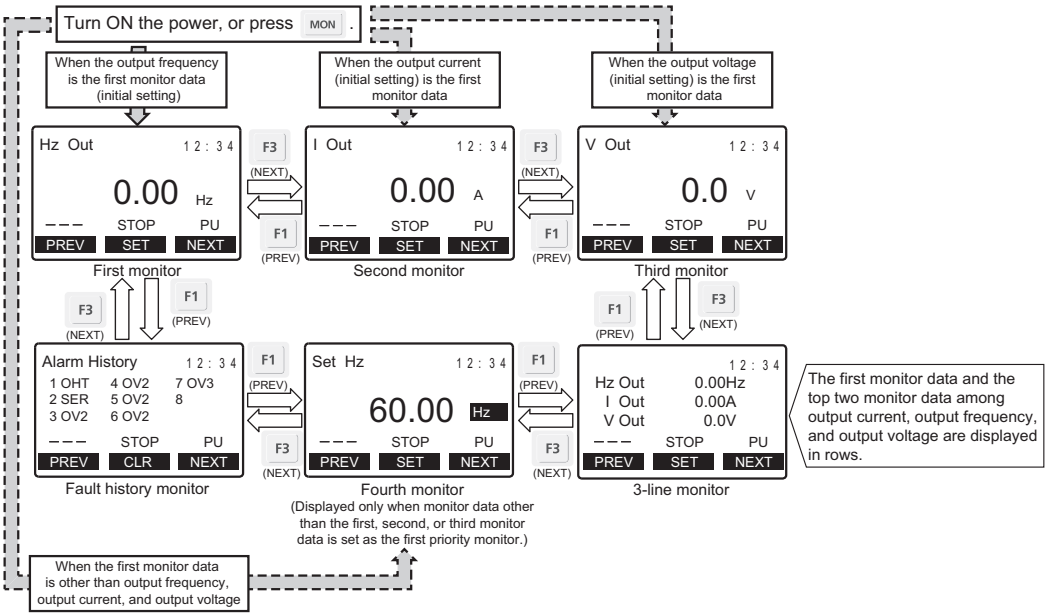

Inverter parameter list (by parameter number)

For simple variable-speed operation of the inverter, the initial value of the parameters may be used as they are. Set the necessary parameters to meet the load and operational specifications. Parameter setting, change and check can be made from the operation panel (FR-DU08).

NOTE

- Simple indicates simple mode parameters. Use **Pr.160 User group read selection** to indicate the simple mode parameters only.
- Parameter setting may be restricted in some operating statuses. Use **Pr.77 Parameter write selection** to change the setting.

Function	Pr.	Pr. group	Name	Setting range	Minimum setting increments	Initial value FM	Initial value CA	Refer to page	Customer setting
Basic functions	0	G000	Torque boost Simple	0 to 30%	0.1%	6% *1 4% *1 3% *1 2% *1 1% *1		117	
	1	H400	Maximum frequency Simple	0 to 120 Hz	0.01 Hz	120 Hz *2 60 Hz *3		117	
	2	H401	Minimum frequency Simple	0 to 120 Hz	0.01 Hz	0 Hz		117	
	3	G001	Base frequency Simple	0 to 590 Hz	0.01 Hz	60 Hz	50 Hz	117	
	4	D301	Multi-speed setting (high speed) Simple	0 to 590 Hz	0.01 Hz	60 Hz	50 Hz	118	
	5	D302	Multi-speed setting (middle speed) Simple	0 to 590 Hz	0.01 Hz	30 Hz		118	
	6	D303	Multi-speed setting (low speed) Simple	0 to 590 Hz	0.01 Hz	10 Hz		118	
	7	F010	Acceleration time Simple	0 to 3600 s	0.1 s	5 s *4 15 s *5		118	
	8	F011	Deceleration time Simple	0 to 3600 s	0.1 s	5 s *4 15 s *5		118	
	9	H000	Electronic thermal O/L relay Simple	0 to 500 A	0.01 A *2	Inverter rated current		119	
		C103	Rated motor current Simple	0 to 3600 A	0.1 A *3				
DC injection brake	10	G100	DC injection brake operation frequency	0 to 120 Hz, 9999	0.01 Hz	3 Hz		119	
	11	G101	DC injection brake operation time	0 to 10 s, 8888	0.1 s	0.5 s		119	
	12	G110	DC injection brake operation voltage	0 to 30%	0.1%	4% *6 2% *6 1% *6		119	
—	13	F102	Starting frequency	0 to 60 Hz	0.01 Hz	0.5 Hz		120	
—	14	G003	Load pattern selection	0 to 5, 12 to 15	1	0		120	
Jog operation	15	D200	Jog frequency	0 to 590 Hz	0.01 Hz	5 Hz		120	
	16	F002	Jog acceleration/deceleration time	0 to 3600 s	0.1 s	0.5 s		120	
—	17	T720	MRS input selection	0, 2, 4	1	0		121	
—	18	H402	High speed maximum frequency	0 to 590 Hz	0.01 Hz	120 Hz *2 60 Hz *3		117	
—	19	G002	Base frequency voltage	0 to 1000 V, 8888, 9999	0.1 V	9999	8888	117	
Acceleration/deceleration times	20	F000	Acceleration/deceleration reference frequency	1 to 590 Hz	0.01 Hz	60 Hz	50 Hz	118	
	21	F001	Acceleration/deceleration time increments	0, 1	1	0		118	
Stall prevention	22	H500	Stall prevention operation level (Torque limit level)	0 to 400%	0.1%	150%		121	
	23	H610	Stall prevention operation level compensation factor at double speed	0 to 200%, 9999	0.1%	9999		121	

Function	Pr.	Pr. group	Name	Setting range	Minimum setting increments	Initial value FM	Initial value CA	Refer to page	Customer setting
Multi-speed setting	24 to 27	D304 to D307	Multi-speed setting (4 speed to 7 speed)	0 to 590 Hz, 9999	0.01 Hz	9999		118	
–	28	D300	Multi-speed input compensation selection	0, 1	1	0		118	
–	29	F100	Acceleration/deceleration pattern selection	0 to 6	1	0		122	
–	30	E300	Regenerative function selection	0 to 2, 10, 11, 20, 21, 100 to 102, 110, 111, 120, 121 *11	1	0		123	
				2, 10, 11, 102, 110, 111 *12	1	10			
				0, 2, 10, 20, 100, 102, 110, 120 *13	1	0			
Frequency jump	31	H420	Frequency jump 1A	0 to 590 Hz, 9999	0.01 Hz	9999		124	
	32	H421	Frequency jump 1B	0 to 590 Hz, 9999	0.01 Hz	9999		124	
	33	H422	Frequency jump 2A	0 to 590 Hz, 9999	0.01 Hz	9999		124	
	34	H423	Frequency jump 2B	0 to 590 Hz, 9999	0.01 Hz	9999		124	
	35	H424	Frequency jump 3A	0 to 590 Hz, 9999	0.01 Hz	9999		124	
	36	H425	Frequency jump 3B	0 to 590 Hz, 9999	0.01 Hz	9999		124	
–	37	M000	Speed display	0, 1 to 9998	1	0		124	
Frequency detection	41	M441	Up-to-frequency sensitivity	0 to 100%	0.1%	10%		125	
	42	M442	Output frequency detection	0 to 590 Hz	0.01 Hz	6 Hz		125	
	43	M443	Output frequency detection for reverse rotation	0 to 590 Hz, 9999	0.01 Hz	9999		125	
Second functions	44	F020	Second acceleration/deceleration time	0 to 3600 s	0.1 s	5 s		118	
	45	F021	Second deceleration time	0 to 3600 s, 9999	0.1 s	9999		118	
	46	G010	Second torque boost	0 to 30%, 9999	0.1%	9999		117	
	47	G011	Second V/F (base frequency)	0 to 590 Hz, 9999	0.01 Hz	9999		117	
	48	H600	Second stall prevention operation level	0 to 400%	0.1%	150%		121	
	49	H601	Second stall prevention operation frequency	0 to 590 Hz, 9999	0.01 Hz	0 Hz		121	
	50	M444	Second output frequency detection	0 to 590 Hz	0.01 Hz	30 Hz		125	
	51	H010 C203	Second electronic thermal O/L relay Rated second motor current	0 to 500 A, 9999 *2	0.01 A	9999		119	
				0 to 3600 A, 9999 *3	0.1 A				
Monitor functions	52	M100	Operation panel main monitor selection	0, 5 to 14, 17 to 20, 22 to 36, 38 to 46, 50 to 57, 61, 62, 64, 67, 71 to 75, 87 to 98, 100	1	0		125	
	54	M300	FM/CA terminal function selection	1 to 3, 5 to 14, 17, 18, 21, 24, 32 to 34, 36, 46, 50, 52, 53, 61, 62, 67, 70, 87 to 90, 92, 93, 95, 97, 98	1	1		125	
	55	M040	Frequency monitoring reference	0 to 590 Hz	0.01 Hz	60 Hz	50 Hz	127	
	56	M041	Current monitoring reference	0 to 500 A *2	0.01 A	Inverter rated current		127	
				0 to 3600 A *3	0.1 A				
Automatic restart	57	A702	Restart coasting time	0, 0.1 to 30 s, 9999	0.1 s	9999		128	
	58	A703	Restart cushion time	0 to 60 s	0.1 s	1 s		128	
–	59	F101	Remote function selection	0 to 3, 11 to 13	1	0		129	
–	60	G030	Energy saving control selection	0, 4, 9	1	0		129	

Function	Pr.	Pr. group	Name	Setting range	Minimum setting increments	Initial value FM	Initial value CA	Refer to page	Customer setting
Automatic acceleration/ deceleration	61	F510	Reference current	0 to 500 A, 9999 *2	0.01 A *2	9999		130	
				0 to 3600 A, 9999 *3	0.1 A *3				
	62	F511	Reference value at acceleration	0 to 400%, 9999	0.1%	9999		130	
	63	F512	Reference value at deceleration	0 to 400%, 9999	0.1%	9999		130	
	64	F520	Starting frequency for elevator mode	0 to 10 Hz, 9999	0.01 Hz	9999		130	
—	65 *19	H300	Retry selection	0 to 5	1	0		130	
—	66	H611	Stall prevention operation reduction starting frequency	0 to 590 Hz	0.01 Hz	60 Hz	50 Hz	121	
Retry	67 *19	H301	Number of retries at fault occurrence	0 to 10, 101 to 110	1	0		130	
	68 *19	H302	Retry waiting time	0.1 to 600 s	0.1 s	1 s		130	
	69 *19	H303	Retry count display erase	0	1	0		130	
—	70 *14	G107	Special regenerative brake duty	0 to 100%	0.1%	0%		123	
—	71	C100	Applied motor	0 to 6, 13 to 16, 20, 23, 24, 30, 33, 34, 40, 43, 44, 50, 53, 54, 70, 73, 74, 330, 333, 334, 8090, 8093, 8094, 9090, 9093, 9094	1	0		131	
—	72 *19	E600	PWM frequency selection	0 to 15 *2	1	2		131	
				0 to 6, 25 *3					
—	73	T000	Analog input selection	0 to 7, 10 to 17	1	1		132	
—	74	T002	Input filter time constant	0 to 8	1	1		132	
—	75	-	Reset selection/disconnected PU detection/PU stop selection	0 to 3, 14 to 17, 1000 to 1003, 1014 to 1017 *2	1	14		133	
				0 to 3, 14 to 17, 100 to 103, 114 to 117, 1000 to 1003, 1014 to 1017, 1100 to 1103,1114 to 1117 *3					
		E100	Reset selection	0 to 3		0			
		E101	Disconnected PU detection	0, 1					
		E102	PU stop selection			1			
		E107	Reset limit	0 *2	1	0			
				0, 1 *3					
—	76	M510	Fault code output selection	0 to 2	1	0		133	
—	77	E400	Parameter write selection	0 to 2	1	0		134	
—	78	D020	Reverse rotation prevention selection	0 to 2	1	0		134	
—	79	D000	Operation mode selection Simple	0 to 4, 6, 7	1	0		134	

Function	Pr.	Pr. group	Name	Setting range	Minimum setting increments	Initial value FM	Initial value CA	Refer to page	Customer setting
Motor constants	80	C101	Motor capacity	0.4 to 55 kW, 9999 *2	0.01 kW *2	9999		135	
				0 to 3600 kW, 9999 *3	0.1 kW *3				
	81	C102	Number of motor poles	2, 4, 6, 8, 10, 12, 9999	1	9999		135	
	82	C125	Motor excitation current	0 to 500 A, 9999 *2	0.01 A *2	9999		136	
				0 to 3600 A, 9999 *3	0.1 A *3				
	83	C104	Rated motor voltage	0 to 1000 V	0.1 V	200 V *7		136	
						400 V *8			
	84	C105	Rated motor frequency	10 to 400 Hz, 9999	0.01 Hz	9999		136	
	85	G201	Excitation current break point	0 to 400 Hz, 9999	0.01 Hz	9999		137	
	86	G202	Excitation current low-speed scaling factor	0 to 300%, 9999	0.1%	9999		137	
	89	G932	Speed control gain (Advanced magnetic flux vector)	0 to 200%, 9999	0.1%	9999		135	
	90	C120	Motor constant (R1)	0 to 50 Ω, 9999 *2	0.001 Ω *2	9999		136	
				0 to 400 mΩ, 9999 *3	0.01 mΩ *3				
	91	C121	Motor constant (R2)	0 to 50 Ω, 9999 *2	0.001 Ω *2	9999		136	
				0 to 400 mΩ, 9999 *3	0.01 mΩ *3				
	92	C122	Motor constant (L1)/d-axis inductance (Ld)	0 to 6000mH, 9999 *2	0.1 mH *2	9999		136	
				0 to 400mH, 9999 *3	0.01 mH *3				
	93	C123	Motor constant (L2)/q-axis inductance (Lq)	0 to 6000mH, 9999 *2	0.1 mH *2	9999		136	
				0 to 400mH, 9999 *3	0.01 mH *3				
	94	C124	Motor constant (X)	0 to 100%, 9999	0.1% *2	9999		136	
					0.01% *3				
	95	C111	Online auto tuning selection	0 to 2	1	0		138	
	96	C110	Auto tuning setting/status	0, 1, 11, 101	1	0		136	
Adjustable 5 points V/F	100	G040	V/F1 (first frequency)	0 to 590 Hz, 9999	0.01 Hz	9999		138	
	101	G041	V/F1 (first frequency voltage)	0 to 1000 V	0.1 V	0 V		138	
	102	G042	V/F2 (second frequency)	0 to 590 Hz, 9999	0.01 Hz	9999		138	
	103	G043	V/F2 (second frequency voltage)	0 to 1000 V	0.1 V	0 V		138	
	104	G044	V/F3 (third frequency)	0 to 590 Hz, 9999	0.01 Hz	9999		138	
	105	G045	V/F3 (third frequency voltage)	0 to 1000 V	0.1 V	0 V		138	
	106	G046	V/F4 (fourth frequency)	0 to 590 Hz, 9999	0.01 Hz	9999		138	
	107	G047	V/F4 (fourth frequency voltage)	0 to 1000 V	0.1 V	0 V		138	
	108	G048	V/F5 (fifth frequency)	0 to 590 Hz, 9999	0.01 Hz	9999		138	
	109	G049	V/F5 (fifth frequency voltage)	0 to 1000 V	0.1 V	0 V		138	
Third functions	110	F030	Third acceleration/deceleration time	0 to 3600 s, 9999	0.1 s	9999		118	
	111	F031	Third deceleration time	0 to 3600 s, 9999	0.1 s	9999		118	
	112	G020	Third torque boost	0 to 30%, 9999	0.1%	9999		117	
	113	G021	Third V/F (base frequency)	0 to 590 Hz, 9999	0.01 Hz	9999		117	
	114	H602	Third stall prevention operation level	0 to 400%	0.1%	150%		121	
	115	H603	Third stall prevention operation frequency	0 to 590 Hz	0.01 Hz	0 Hz		121	
	116	M445	Third output frequency detection	0 to 590 Hz	0.01 Hz	60 Hz	50 Hz	125	
PU connector communication	117	N020	PU communication station number	0 to 31	1	0		139	
	118	N021	PU communication speed	48, 96, 192, 384, 576, 768, 1152	1	192		139	
	119	-	PU communication stop bit length / data length	0, 1, 10, 11	1	1		139	
		N022	PU communication data length	0, 1		0			
		N023	PU communication stop bit length	0, 1		1			
	120	N024	PU communication parity check	0 to 2	1	2		139	
	121	N025	PU communication retry count	0 to 10, 9999	1	1		139	
	122	N026	PU communication check time interval	0, 0.1 to 999.8 s, 9999	0.1 s	9999		139	
	123	N027	PU communication waiting time setting	0 to 150 ms, 9999	1 ms	9999		139	
	124	N028	PU communication CR/LF selection	0 to 2	1	1		139	

Function	Pr.	Pr. group	Name	Setting range	Minimum setting increments	Initial value FM	Initial value CA	Refer to page	Customer setting
—	125	T022	Terminal 2 frequency setting gain frequency Simple	0 to 590 Hz	0.01 Hz	60 Hz	50 Hz	142	
—	126	T042	Terminal 4 frequency setting gain frequency Simple	0 to 590 Hz	0.01 Hz	60 Hz	50 Hz	142	
PID operation	127	A612	PID control automatic switchover frequency	0 to 590 Hz, 9999	0.01 Hz	9999		143	
	128	A610	PID action selection	0, 10, 11, 20, 21, 40 to 43, 50, 51, 60, 61, 70, 71, 80, 81, 90, 91, 100, 101, 1000, 1001, 1010, 1011, 2000, 2001, 2010, 2011	1	0		143	
	129	A613	PID proportional band	0.1 to 1000%, 9999	0.1%	100%		143	
	130	A614	PID integral time	0.1 to 3600 s, 9999	0.1 s	1 s		143	
	131	A601	PID upper limit	0 to 100%, 9999	0.1%	9999		143	
	132	A602	PID lower limit	0 to 100%, 9999	0.1%	9999		143	
	133	A611	PID action set point	0 to 100%, 9999	0.01%	9999		143	
	134	A615	PID differential time	0.01 to 10 s, 9999	0.01 s	9999		143	
Bypass	135	A000	Electronic bypass sequence selection	0, 1	1	0		144	
	136	A001	MC switchover interlock time	0 to 100 s	0.1 s	1 s		144	
	137	A002	Start waiting time	0 to 100 s	0.1 s	0.5 s		144	
	138	A003	Bypass selection at a fault	0, 1	1	0		144	
	139	A004	Automatic switchover frequency from inverter to bypass operation	0 to 60 Hz, 8888, 9999	0.01 Hz	9999		144	
Backlash measures	140	F200	Backlash acceleration stopping frequency	0 to 590 Hz	0.01 Hz	1 Hz		122	
	141	F201	Backlash acceleration stopping time	0 to 360 s	0.1 s	0.5 s		122	
	142	F202	Backlash deceleration stopping frequency	0 to 590 Hz	0.01 Hz	1 Hz		122	
	143	F203	Backlash deceleration stopping time	0 to 360 s	0.1 s	0.5 s		122	
—	144	M002	Speed setting switchover	0, 2, 4, 6, 8, 10, 12, 102, 104, 106, 108, 110, 112	1	4		124	
PU	145	E103	PU display language selection	0 to 7	1	—		144	
—	147	F022	Acceleration/deceleration time switching frequency	0 to 590 Hz, 9999	0.01 Hz	9999		118	
Current detection	148	H620	Stall prevention level at 0 V input	0 to 400%	0.1%	150%		121	
	149	H621	Stall prevention level at 10 V input	0 to 400%	0.1%	200%		121	
	150	M460	Output current detection level	0 to 400%	0.1%	150%		144	
	151	M461	Output current detection signal delay time	0 to 10 s	0.1 s	0 s		144	
	152	M462	Zero current detection level	0 to 400%	0.1%	5%		144	
	153	M463	Zero current detection time	0 to 10 s	0.01 s	0.5 s		144	
—	154	H631	Voltage reduction selection during stall prevention operation	0, 1, 10, 11	1	1		121	
—	155	T730	RT signal function validity condition selection	0, 10	1	0		145	
—	156	H501	Stall prevention operation selection	0 to 31, 100, 101	1	0		121	
—	157	M430	OL signal output timer	0 to 25 s, 9999	0.1 s	0 s		121	
—	158	M301	AM terminal function selection	1 to 3, 5 to 14, 17, 18, 21, 24, 32 to 34, 36, 46, 50, 52 to 54, 61, 62, 67, 70, 87 to 90, 91 to 98	1	1		125	
—	159	A005	Automatic switchover frequency range from bypass to inverter operation	0 to 10 Hz, 9999	0.01 Hz	9999		144	
—	160	E440	User group read selection Simple	0, 1, 9999	1	0		145	

Function	Pr.	Pr. group	Name	Setting range	Minimum setting increments	Initial value FM	Initial value CA	Refer to page	Customer setting
–	161	E200	Frequency setting/key lock operation selection	0, 1, 10, 11	1	0		145	
Automatic restart functions	162	A700	Automatic restart after instantaneous power failure selection	0 to 3, 10 to 13, 1000 to 1003, 1010 to 1013	1	0		128	
	163	A704	First cushion time for restart	0 to 20 s	0.1 s	0 s		128	
	164	A705	First cushion voltage for restart	0 to 100%	0.1%	0%		128	
	165	A710	Stall prevention operation level for restart	0 to 400%	0.1%	150%		128	
Current detection	166	M433	Output current detection signal retention time	0 to 10 s, 9999	0.1 s	0.1 s		144	
	167	M464	Output current detection operation selection	0, 1, 10, 11	1	0		144	
–	168	E000	Parameter for manufacturer setting. Do not set.						
		E080							
–	169	E001							
		E081							
Cumulative monitor clear	170	M020	Watt-hour meter clear	0, 10, 9999	1	9999		125	
	171	M030	Operation hour meter clear	0, 9999	1	9999		125	
User group	172	E441	User group registered display/batch clear	9999, (0 to 16)	1	0		145	
	173	E442	User group registration	0 to 1999, 9999	1	9999		145	
	174	E443	User group clear	0 to 1999, 9999	1	9999		145	
Input terminal function assignment	178	T700	STF terminal function selection	0 to 20, 22 to 28, 32, 37,42 to 48, 50 to 53, 57 to 60, 62, 64 to 74, 76 to 80, 85, 87 to 89, 92 to 96, 9999	1	60		146	
	179	T701	STR terminal function selection	0 to 20, 22 to 28, 32, 37, 42 to 48, 50 to 53, 57 to 59, 61, 62, 64 to 74, 76 to 80, 85, 87 to 89, 92 to 96, 9999	1	61		146	
	180	T702	RL terminal function selection	0 to 20, 22 to 28, 32, 37, 42 to 48, 50 to 53, 57 to 59, 62, 64 to 74, 76 to 80, 85, 87 to 89, 92 to 96, 9999	1	0		146	
	181	T703	RM terminal function selection		1	1		146	
	182	T704	RH terminal function selection		1	2		146	
	183	T705	RT terminal function selection		1	3		146	
	184	T706	AU terminal function selection		1	4		146	
	185	T707	JOG terminal function selection		1	5		146	
	186	T708	CS terminal function selection		1	6		146	
	187	T709	MRS terminal function selection		1	24 *11*13		146	
						10 *12			
	188	T710	STOP terminal function selection		1	25		146	
	189	T711	RES terminal function selection		1	62		146	

Function	Pr.	Pr. group	Name	Setting range	Minimum setting increments	Initial value FM	Initial value CA	Refer to page	Customer setting
Output terminal function assignment	190	M400	RUN terminal function selection	0 to 8, 10 to 20, 22, 25 to 28, 30 to 36, 38 to 57, 60, 61, 63, 64, 67, 68, 70, 79, 80, 84, 85, 90 to 99, 100 to 108, 110 to 116, 120, 122, 125 to 128, 130 to 136, 138 to 157, 160, 161, 163, 164, 167, 168, 170, 179, 180, 184, 185, 190 to 199, 200 to 208, 211 to 213, 300 to 308, 311 to 313, 9999 *17*20	1	0		147	
	191	M401	SU terminal function selection		1	1		147	
	192	M402	IPF terminal function selection		1	2 *11*13	9999 *12	147	
	193	M403	OL terminal function selection		1	3		147	
	194	M404	FU terminal function selection		1	4		147	
	195	M405	ABC1 terminal function selection	0 to 8, 10 to 20, 22, 25 to 28, 30 to 36, 38 to 57, 60, 61, 63, 64, 67, 68, 70, 79, 80, 84, 85, 90, 91, 94 to 99, 100 to 108, 110 to 116, 120, 122, 125 to 128, 130 to 136, 138 to 157, 160, 161, 163, 164, 167, 168, 170, 179, 180, 184, 185, 190, 191, 194 to 199, 200 to 208, 211 to 213, 300 to 308, 311 to 313, 9999 *17*20	1	99		147	
	196	M406	ABC2 terminal function selection		1	9999		147	
Multi-speed setting	232 to 239	D308 to D315	Multi-speed setting (8 speed to 15 speed)	0 to 590 Hz, 9999	0.01 Hz	9999		118	
—	240	E601	Soft-PWM operation selection	0, 1	1	1		131	
—	241	M043	Analog input display unit switchover	0, 1	1	0		142	
—	242	T021	Terminal 1 added compensation amount (terminal 2)	0 to 100%	0.1%	100%		132	
—	243	T041	Terminal 1 added compensation amount (terminal 4)	0 to 100%	0.1%	75%		132	
—	244	H100	Cooling fan operation selection	0, 1, 101 to 105	1	1		148	
Slip compensation	245	G203	Rated slip	0 to 50%, 9999	0.01%	9999		148	
	246	G204	Slip compensation time constant	0.01 to 10 s	0.01 s	0.5 s		148	
	247	G205	Constant-power range slip compensation selection	0, 9999	1	9999		148	
—	248	A006	Self power management selection	0 to 2	1	0		148	
—	249	H101	Earth (ground) fault detection at start	0, 1	1	0		148	
—	250	G106	Stop selection	0 to 100 s, 1000 to 1100 s, 8888, 9999	0.1 s	9999		148	
—	251	H200	Output phase loss protection selection	0, 1	1	1		149	

Function	Pr.	Pr. group	Name	Setting range	Minimum setting increments	Initial value FM	Initial value CA	Refer to page	Customer setting
Frequency compensation function	252	T050	Override bias	0 to 200%	0.1%	50%		132	
	253	T051	Override gain	0 to 200%	0.1%	150%		132	
—	254	A007	Main circuit power OFF waiting time	1 to 3600 s, 9999	1 s	600 s		148	
Life check	255	E700	Life alarm status display	(0 to 15, 32 to 47)*11 (0, 1, 4, 5)*12 (0 to 63)*13	1	0		149	
	256 *15	E701	Inrush current limit circuit life display	(0 to 100%)	1%	100%		149	
	257	E702	Control circuit capacitor life display	(0 to 100%)	1%	100%		149	
	258 *15	E703	Main circuit capacitor life display	(0 to 100%)	1%	100%		149	
	259 *15	E704	Main circuit capacitor life measuring	0, 1	1	0		149	
—	260 *19	E602	PWM frequency automatic switchover	0, 1	1	1		131	
Power failure stop	261	A730	Power failure stop selection	0 to 2, 11, 12, 21, 22	1	0		150	
	262	A731	Subtracted frequency at deceleration start	0 to 20 Hz	0.01 Hz	3 Hz		150	
	263	A732	Subtraction starting frequency	0 to 590 Hz, 9999	0.01 Hz	60 Hz	50 Hz	150	
	264	A733	Power-failure deceleration time 1	0 to 3600 s	0.1 s	5 s		150	
	265	A734	Power-failure deceleration time 2	0 to 3600 s, 9999	0.1 s	9999		150	
	266	A735	Power failure deceleration time switchover frequency	0 to 590 Hz	0.01 Hz	60 Hz	50 Hz	150	
—	267	T001	Terminal 4 input selection	0 to 2	1	0		132	
—	268	M022	Monitor decimal digits selection	0, 1, 9999	1	9999		125	
—	269	E023	Parameter for manufacturer setting. Do not set.						
—	270	A200	Stop-on contact/load torque high-speed frequency control selection	0 to 3, 11, 13	1	0		151	
Load torque high speed frequency control	271	A201	High-speed setting maximum current	0 to 400%	0.1%	50%		151	
	272	A202	Middle-speed setting minimum current	0 to 400%	0.1%	100%		151	
	273	A203	Current averaging range	0 to 590 Hz, 9999	0.01 Hz	9999		151	
	274	A204	Current averaging filter time constant	1 to 4000	1	16		151	
Stop-on contact control	275	A205	Stop-on contact excitation current low-speed multiplying factor	0 to 300%, 9999	0.1%	9999		151	
	276 *19	A206	PWM carrier frequency at stop-on contact	0 to 9, 9999 *2 0 to 4, 9999 *3	1	9999		151	
Brake sequence function	278	A100	Brake opening frequency	0 to 30 Hz	0.01 Hz	3 Hz		152	
	279	A101	Brake opening current	0 to 400%	0.1%	130%		152	
	280	A102	Brake opening current detection time	0 to 2 s	0.1 s	0.3 s		152	
	281	A103	Brake operation time at start	0 to 5 s	0.1 s	0.3 s		152	
	282	A104	Brake operation frequency	0 to 30 Hz	0.01 Hz	6 Hz		152	
	283	A105	Brake operation time at stop	0 to 5 s	0.1 s	0.3 s		152	
	284	A106	Deceleration detection function selection	0, 1	1	0		152	
	285	A107	Overspeed detection frequency	0 to 30 Hz, 9999	0.01 Hz	9999		152, 153	
		H416	Speed deviation excess detection frequency						
Droop control	286	G400	Droop gain	0 to 100%	0.1%	0%		153	
	287	G401	Droop filter time constant	0 to 1 s	0.01 s	0.3 s		153	
	288	G402	Droop function activation selection	0 to 2, 10, 11, 20 to 22	1	0		153	
—	289	M431	Inverter output terminal filter	5 to 50 ms, 9999	1 ms	9999		147	
—	290	M044	Monitor negative output selection	0 to 7	1	0		125	

Function	Pr.	Pr. group	Name	Setting range	Minimum setting increments	Initial value FM	Initial value CA	Refer to page	Customer setting
—	291	D100	Pulse train I/O selection	[FM Type] 0, 1, 10, 11, 20, 21, 100 [CA Type] 0, 1	1	0		154	
—	292	F500 A110	Automatic acceleration/deceleration	0, 1, 3, 5 to 8, 11	1	0		130	
—	293	F513	Acceleration/deceleration separate selection	0 to 2	1	0		130	
—	294	A785	UV avoidance voltage gain	0 to 200%	0.1%	100%		150	
—	295	E201	Frequency change increment amount setting	0, 0.01, 0.1, 1, 10	0.01	0		145	
Password function	296	E410	Password lock level	0 to 6, 99, 100 to 106, 199, 9999	1	9999		155	
	297	E411	Password lock/unlock	(0 to 5), 1000 to 9998, 9999	1	9999		155	
—	298	A711	Frequency search gain	0 to 32767, 9999	1	9999		136	
—	299	A701	Rotation direction detection selection at restarting	0, 1, 9999	1	0		128	
CC-Link IE	313 *22	M410	DO0 output selection	0 to 8, 10 to 20, 22, 25 to 28, 30 to 36, 38 to 57, 60, 61, 63, 64, 68, 70, 79, 80, 84 to 99, 100 to 108, 110 to 116, 120, 122, 125 to 128, 130 to 136, 138 to 157, 160, 161, 163, 164, 168, 170, 179, 180, 184 to 199, 200 to 208, 300 to 308, 9999 *17	1	9999		147	
	314 *22	M411	DO1 output selection		1	9999		147	
	315 *22	M412	DO2 output selection		1	9999		147	
RS-485 communication	331 *18*19	N030	RS-485 communication station number	0 to 31 (0 to 247)	1	0		139	
	332 *18*19	N031	RS-485 communication speed	3, 6, 12, 24, 48, 96, 192, 384, 576, 768, 1152	1	96		139	
	333 *18*19	-	RS-485 communication stop bit length / data length	0, 1, 10, 11	1	1		139	
		N032	PU communication data length	0, 1	1	0			
		N033	PU communication stop bit length	0, 1	1	1			
	334 *18*19	N034	RS-485 communication parity check selection	0 to 2	1	2		139	
	335 *18*19	N035	RS-485 communication retry count	0 to 10, 9999	1	1		139	
	336 *18*19	N036	RS-485 communication check time interval	0 to 999.8 s, 9999	0.1 s	0 s		139	
	337 *18*19	N037	RS-485 communication waiting time setting	0 to 150 ms, 9999	1 ms	9999		139	
	338	D010	Communication operation command source	0, 1	1	0		155	
	339	D011	Communication speed command source	0 to 2	1	0		155	
	340	D001	Communication startup mode selection	0 to 2, 10, 12	1	0		134	
	341 *18*19	N038	RS-485 communication CR/LF selection	0 to 2	1	1		139	
	342	N001	Communication EEPROM write selection	0, 1	1	0		139	
	343 *18*19	N080	Communication error count	-	1	0		139	

Function	Pr.	Pr. group	Name	Setting range	Minimum setting increments	Initial value FM	Initial value CA	Refer to page	Customer setting
–	349 *22	-	Communication reset selection/ Ready bit status selection/Reset selection when inverter errors cleared	0, 1, 100, 101, 1000, 1001, 1100, 1101	1	0		139	
		N010	Communication reset selection	0, 1	1	0		139	
		N240	Ready bit status selection	0, 1	1	0		139	
		N241	Reset selection when inverter errors cleared	0, 1	1	0		-	
Orientation control	350 *9	A510	Stop position command selection	0, 1, 9999	1	9999		156	
	351 *9	A526	Orientation speed	0 to 30 Hz	0.01 Hz	2 Hz		156	
	352 *9	A527	Creep speed	0 to 10 Hz	0.01 Hz	0.5 Hz		156	
	353 *9	A528	Creep switchover position	0 to 16383	1	511		156	
	354 *9	A529	Position loop switchover position	0 to 8191	1	96		156	
	355 *9	A530	DC injection brake start position	0 to 255	1	5		156	
	356 *9	A531	Internal stop position command	0 to 16383	1	0		156	
	357 *9	A532	Orientation in-position zone	0 to 255	1	5		156	
	358 *9	A533	Servo torque selection	0 to 13	1	1		156	
	359 *9	C141	Encoder rotation direction	0, 1, 100, 101	1	1		156	
	360 *9	A511	16-bit data selection	0 to 127	1	0		156	
	361 *9	A512	Position shift	0 to 16383	1	0		156	
	362 *9	A520	Orientation position loop gain	0.1 to 100	0.1	1		156	
	363 *9	A521	Completion signal output delay time	0 to 5 s	0.1 s	0.5 s		156	
	364 *9	A522	Encoder stop check time	0 to 5 s	0.1 s	0.5 s		156	
	365 *9	A523	Orientation limit	0 to 60 s, 9999	1 s	9999		156	
	366 *9	A524	Recheck time	0 to 5 s, 9999	0.1 s	9999		156	
Encoder feedback	367 *9	G240	Speed feedback range	0 to 590 Hz, 9999	0.01 Hz	9999		156	
	368 *9	G241	Feedback gain	0 to 100	0.1	1		156	
	369 *9	C140	Number of encoder pulses	0 to 4096	1	1024		156	
	374	H800	Overspeed detection level	0 to 590 Hz, 9999	0.01 Hz	9999		156	
	376 *9	C148	Encoder signal loss detection enable/disable selection	0, 1	1	0		157	
S-pattern acceleration/ deceleration C	380	F300	Acceleration S-pattern 1	0 to 50%	1%	0%		122	
	381	F301	Deceleration S-pattern 1	0 to 50%	1%	0%		122	
	382	F302	Acceleration S-pattern 2	0 to 50%	1%	0%		122	
	383	F303	Deceleration S-pattern 2	0 to 50%	1%	0%		122	
Pulse train input	384	D101	Input pulse division scaling factor	0 to 250	1	0		154	
	385	D110	Frequency for zero input pulse	0 to 590 Hz	0.01 Hz	0 Hz		154	
	386	D111	Frequency for maximum input pulse	0 to 590 Hz	0.01 Hz	60 Hz	50 Hz	154	
Orientation control	393 *9	A525	Orientation selection	0 to 2, 10 to 12	1	0		156	
	394 *9	A540	Number of machine side gear teeth	0 to 32767	1	1		156	
	395 *9	A541	Number of motor side gear teeth	0 to 32767	1	1		156	
	396 *9	A542	Orientation speed gain (P term)	0 to 1000	1	60		156	
	397 *9	A543	Orientation speed integral time	0 to 20 s	0.001 s	0.333 s		156	
	398 *9	A544	Orientation speed gain (D term)	0 to 100	0.1	1		156	
	399 *9	A545	Orientation deceleration ratio	0 to 1000	1	20		156	
–	413 *9	M601	Encoder pulse division ratio	1 to 32767	1	1		169	
PLC function	414	A800	PLC function operation selection	0 to 2, 11, 12	1	0		157	
	415	A801	Inverter operation lock mode setting	0, 1	1	0		157	
	416	A802	Pre-scale function selection	0 to 5	1	0		157	
	417	A803	Pre-scale setting value	0 to 32767	1	1		157	

Function	Pr.	Pr. group	Name	Setting range	Minimum setting increments	Initial value FM	Initial value CA	Refer to page	Customer setting
Position control	419	B000	Position command source selection	0 to 2, 10, 100, 110, 200, 210, 300, 310, 1110, 1310	1	0		158, 159	
	420	B001	Command pulse scaling factor numerator (electronic gear numerator)	1 to 32767	1	1		160	
	421	B002	Command pulse multiplication denominator (electronic gear denominator)	1 to 32767	1	1		160	
	422	B003	Position control gain	0 to 150 sec^{-1}	1 sec^{-1}	25 sec^{-1}		160	
	423	B004	Position feed forward gain	0 to 100%	1%	0%		160	
	424	B005	Position command acceleration/ deceleration time constant	0 to 50 s	0.001 s	0 s		160	
	425	B006	Position feed forward command filter	0 to 5 s	0.001 s	0 s		160	
	426	B007	In-position width	0 to 32767 pulse	1 pulse	100 pulse		160	
	427	B008	Excessive level error	0 to 400K pulse, 9999	1K pulse	40K pulse		160	
	428	B009	Command pulse selection	0 to 5	1	0		159	
	429	B010	Clear signal selection	0, 1	1	1		159	
	430	B011	Pulse monitor selection	0 to 5, 12, 13, 100 to 105, 112, 113, 1000 to 1005, 1012, 1013, 1100 to 1105, 1112, 1113, 2000 to 2005, 2012, 2013, 2100 to 2105, 2112, 2113, 3000 to 3005, 3012, 3013, 3100 to 3105, 3112, 3113, 8888, 9999	1	9999		159	
–	432 *9	D120	Pulse train torque command bias	0 to 400%	1%	0%		166	
–	433 *9	D121	Pulse train torque command gain	0 to 400%	1%	150%		166	
CC-Link IE	434 *16	N110	Network number (CC-Link IE)	0 to 255	1	0		139	
	435 *16	N111	Station number (CC-Link IE)	0 to 255	1	0		139	
–	446	B012	Model position control gain	0 to 150 sec^{-1}	1 sec^{-1}	25 sec^{-1}		160	

Function	Pr.	Pr. group	Name	Setting range	Minimum setting increments	Initial value FM	Initial value CA	Refer to page	Customer setting
Second motor constants	450	C200	Second applied motor	0, 1, 3 to 6, 13 to 16, 20, 23, 24, 30, 33, 34, 40, 43, 44, 50, 53, 54, 70, 73, 74, 330, 333, 334, 8093, 8094, 9090, 9093, 9094, 9999	1	9999		131	
	451	G300	Second motor control method selection	0 to 6, 10 to 14, 20, 100 to 106, 110 to 114, 9999	1	9999		135	
	453	C201	Second motor capacity	0.4 to 55 kW, 9999 *2	0.01 kW *2	9999		135	
				0 to 3600 kW, 9999 *3	0.1 kW *3				
	454	C202	Number of second motor poles	2, 4, 6, 8, 10, 12, 9999	1	9999		135	
	455	C225	Second motor excitation current	0 to 500 A, 9999 *2	0.01 A *2	9999		136	
				0 to 3600 A, 9999 *3	0.1 A *3				
	456	C204	Rated second motor voltage	0 to 1000 V	0.1 V	200 V *7		136	
						400 V *8			
	457	C205	Rated second motor frequency	10 to 400 Hz, 9999	0.01 Hz	9999		136	
	458	C220	Second motor constant (R1)	0 to 50 Ω, 9999 *2	0.001 Ω *2	9999		136	
				0 to 400 mΩ, 9999 *3	0.01 mΩ *3				
	459	C221	Second motor constant (R2)	0 to 50 Ω, 9999 *2	0.001 Ω*2	9999		136	
				0 to 400 mΩ, 9999 *3	0.01 mΩ *3				
	460	C222	Second motor constant (L1) / d-axis inductance (Ld)	0 to 6000mH, 9999 *2	0.1 mH *2	9999		136	
				0 to 400mH, 9999 *3	0.01 mH *3				
	461	C223	Second motor constant (L2) / q-axis inductance (Lq)	0 to 6000mH, 9999 *2	0.1 mH *2	9999		136	
				0 to 400mH, 9999 *3	0.01 mH *3				
	462	C224	Second motor constant (X)	0 to 100%, 9999	0.1% *2	9999		136	
					0.01% *3				
	463	C210	Second motor auto tuning setting/ status	0, 1, 11, 101	1	0		136	

Function	Pr.	Pr. group	Name	Setting range	Minimum setting increments	Initial value FM	Initial value CA	Refer to page	Customer setting
Simple position control	464	B020	Digital position control sudden stop deceleration time	0 to 360 s	0.1 s	0 s		158	
	465	B021	First target position lower 4 digits	0 to 9999	1	0		158	
	466	B022	First target position upper 4 digits	0 to 9999	1	0		158	
	467	B023	Second target position lower 4 digits	0 to 9999	1	0		158	
	468	B024	Second target position upper 4 digits	0 to 9999	1	0		158	
	469	B025	Third target position lower 4 digits	0 to 9999	1	0		158	
	470	B026	Third target position upper 4 digits	0 to 9999	1	0		158	
	471	B027	Fourth target position lower 4 digits	0 to 9999	1	0		158	
	472	B028	Fourth target position upper 4 digits	0 to 9999	1	0		158	
	473	B029	Fifth target position lower 4 digits	0 to 9999	1	0		158	
	474	B030	Fifth target position upper 4 digits	0 to 9999	1	0		158	
	475	B031	Sixth target position lower 4 digits	0 to 9999	1	0		158	
	476	B032	Sixth target position upper 4 digits	0 to 9999	1	0		158	
	477	B033	Seventh target position lower 4 digits	0 to 9999	1	0		158	
	478	B034	Seventh target position upper 4 digits	0 to 9999	1	0		158	
	479	B035	Eighth target position lower 4 digits	0 to 9999	1	0		158	
	480	B036	Eighth target position upper 4 digits	0 to 9999	1	0		158	
	481	B037	Ninth target position lower 4 digits	0 to 9999	1	0		158	
	482	B038	Ninth target position upper 4 digits	0 to 9999	1	0		158	
	483	B039	Tenth target position lower 4 digits	0 to 9999	1	0		158	
	484	B040	Tenth target position upper 4 digits	0 to 9999	1	0		158	
	485	B041	Eleventh target position lower 4 digits	0 to 9999	1	0		158	
	486	B042	Eleventh target position upper 4 digits	0 to 9999	1	0		158	
	487	B043	Twelfth target position lower 4 digits	0 to 9999	1	0		158	
	488	B044	Twelfth target position upper 4 digits	0 to 9999	1	0		158	
	489	B045	Thirteenth target position lower 4 digits	0 to 9999	1	0		158	
	490	B046	Thirteenth target position upper 4 digits	0 to 9999	1	0		158	
	491	B047	Fourteenth target position lower 4 digits	0 to 9999	1	0		158	
	492	B048	Fourteenth target position upper 4 digits	0 to 9999	1	0		158	
	493	B049	Fifteenth target position lower 4 digits	0 to 9999	1	0		158	
	494	B050	Fifteenth target position upper 4 digits	0 to 9999	1	0		158	
Remote output	495	M500	Remote output selection	0, 1, 10, 11	1	0		160	
	496	M501	Remote output data 1	0 to 4095	1	0		160	
	497	M502	Remote output data 2	0 to 4095	1	0		160	
–	498	A804	PLC function flash memory clear	0, 9696 (0 to 9999)	1	0		157	
–	500 *22	N011	Communication error execution waiting time	0 to 999.8 s	0.1 s	0 s		139	
–	501 *22	N012	Communication error occurrence count display	0	1	0		139	
–	502	N013	Stop mode selection at communication error	0 to 4, 11, 12	1	0		139	
Maintenance	503	E710	Maintenance timer 1	0 (1 to 9998)	1	0		161	
	504	E711	Maintenance timer 1 warning output set time	0 to 9998, 9999	1	9999		161	
–	505	M001	Speed setting reference	1 to 590 Hz	0.01 Hz	60 Hz	50 Hz	124	
–	506 *15	E705	Display estimated main circuit capacitor residual life	(0 to 100%)	1%	100%		149	

Function	Pr.	Pr. group	Name	Setting range	Minimum setting increments	Initial value FM	Initial value CA	Refer to page	Customer setting
S-pattern acceleration/ deceleration D	516	F400	S-pattern time at a start of acceleration	0.1 to 2.5 s	0.1 s	0.1 s		122	
	517	F401	S-pattern time at a completion of acceleration	0.1 to 2.5 s	0.1 s	0.1 s		122	
	518	F402	S-pattern time at a start of deceleration	0.1 to 2.5 s	0.1 s	0.1 s		122	
	519	F403	S-pattern time at a completion of deceleration	0.1 to 2.5 s	0.1 s	0.1 s		122	
—	522	G105	Output stop frequency	0 to 590 Hz, 9999	0.01 Hz	9999		161	
—	539 *18*19	N002	MODBUS RTU communication check time interval	0 to 999.8 s, 9999	0.1 s	9999		139	
—	541 *22	N100	Frequency command sign selection	0, 1	1	0		139	
USB	547	N040	USB communication station number	0 to 31	1	0		161	
	548	N041	USB communication check time interval	0 to 999.8 s, 9999	0.1 s	9999		161	
Communication	549 *18*19	N000	Protocol selection	0, 1	1	0		139	
	550 *19	D012	NET mode operation command source selection	0, 1, 9999 *17	1	9999		155	
	551	D013	PU mode operation command source selection	1 to 3, 9999 *17	1	9999		155	
—	552	H429	Frequency jump range	0 to 30 Hz, 9999	0.01 Hz	9999		124	
PID control	553	A603	PID deviation limit	0 to 100%, 9999	0.1%	9999		143	
	554	A604	PID signal operation selection	0 to 3, 10 to 13	1	0		143	
Current average value monitor	555	E720	Current average time	0.1 to 1 s	0.1 s	1 s		161	
	556	E721	Data output mask time	0 to 20 s	0.1 s	0 s		161	
	557	E722	Current average value monitor signal output reference current	0 to 500 A *2	0.01 A *2	Inverter rated current		161	
				0 to 3600 A *3	0.1 A *3				
—	560	A712	Second frequency search gain	0 to 32767, 9999	1	9999		136	
—	561	H020	PTC thermistor protection level	0.5 to 30 kΩ, 9999	0.01 kΩ	9999		119	
—	563	M021	Energization time carrying-over times	(0 to 65535)	1	0		125	
—	564	M031	Operating time carrying-over times	(0 to 65535)	1	0		125	
—	565	G301	Second motor excitation current break point	0 to 400 Hz, 9999	0.01 Hz	9999		137	
—	566	G302	Second motor excitation current low-speed scaling factor	0 to 300%, 9999	0.1%	9999		137	
Second motor constants	569	G942	Second motor speed control gain	0 to 200%, 9999	0.1%	9999		135	
Multiple rating	570	E301	Multiple rating setting	0 to 3 *11*12	1	2		162	
				1, 2 *13					
—	571	F103	Holding time at a start	0 to 10 s, 9999	0.1 s	9999		120	
—	573	A680 / T052	4 mA input check selection	1 to 4, 9999	1	9999		162	
—	574	C211	Second motor online auto tuning	0 to 2	1	0		138	
PID control	575	A621	Output interruption detection time	0 to 3600 s, 9999	0.1 s	1 s		143	
	576	A622	Output interruption detection level	0 to 590 Hz	0.01 Hz	0 Hz		143	
	577	A623	Output interruption cancel level	900 to 1100%	0.1%	1000%		143	

Function	Pr.	Pr. group	Name	Setting range	Minimum setting increments	Initial value FM	Initial value CA	Refer to page	Customer setting
Traverse function	592	A300	Traverse function selection	0 to 2	1	0		162	
	593	A301	Maximum amplitude amount	0 to 25%	0.1%	10%		162	
	594	A302	Amplitude compensation amount during deceleration	0 to 50%	0.1%	10%		162	
	595	A303	Amplitude compensation amount during acceleration	0 to 50%	0.1%	10%		162	
	596	A304	Amplitude acceleration time	0.1 to 3600 s	0.1 s	5 s		162	
	597	A305	Amplitude deceleration time	0.1 to 3600 s	0.1 s	5 s		162	
—	598	H102	Undervoltage level	175 to 215 VDC, 9999 *7 350 to 430 VDC, 9999 *8	0.1 V	9999		162	
—	599	T721	X10 terminal input selection	0, 1	1	0 *11*13 1 *12		123	
Electronic thermal O/L relay	600	H001	First free thermal reduction frequency 1	0 to 590 Hz, 9999	0.01 Hz	9999		119	
	601	H002	First free thermal reduction ratio 1	1 to 100%	1%	100%		119	
	602	H003	First free thermal reduction frequency 2	0 to 590 Hz, 9999	0.01 Hz	9999		119	
	603	H004	First free thermal reduction ratio 2	1 to 100%	1%	100%		119	
	604	H005	First free thermal reduction frequency 3	0 to 590 Hz, 9999	0.01 Hz	9999		119	
—	606	T722	Power failure stop external signal input selection	0, 1	1	1		150	
—	607	H006	Motor permissible load level	110 to 250%	1%	150%		119	
—	608	H016	Second motor permissible load level	110 to 250%, 9999	1%	9999		119	
PID control	609	A624	PID set point/deviation input selection	1 to 5	1	2		143	
	610	A625	PID measured value input selection	1 to 5	1	3		143	
—	611	F003	Acceleration time at a restart	0 to 3600 s, 9999	0.1 s	9999		128	
—	617	G080	Reverse rotation excitation current low-speed scaling factor	0 to 300%, 9999	0.1%	9999		137	
Cumulative pulse monitor	635 *9	M610	Cumulative pulse clear signal selection	0 to 3	1	0		159	
	636 *9	M611	Cumulative pulse division scaling factor	1 to 16384	1	1		159	
	637 *9	M612	Control terminal option-Cumulative pulse division scaling factor	1 to 16384	1	1		159	
	638 *9	M613	Cumulative pulse storage	0 to 3	1	0		159	
Brake sequence function	639	A108	Brake opening current selection	0, 1	1	0		152	
	640	A109	Brake operation frequency selection	0, 1	1	0		152	
	641	A130	Second brake sequence operation selection	0, 7, 8, 9999	1	0		152	
	642	A120	Second brake opening frequency	0 to 30 Hz	0.01 Hz	3 Hz		152	
	643	A121	Second brake opening current	0 to 400%	0.1%	130%		152	
	644	A122	Second brake opening current detection time	0 to 2 s	0.1 s	0.3 s		152	
	645	A123	Second brake operation time at start	0 to 5 s	0.1 s	0.3 s		152	
	646	A124	Second brake operation frequency	0 to 30 Hz	0.01 Hz	6 Hz		152	
	647	A125	Second brake operation time at stop	0 to 5 s	0.1 s	0.3 s		152	
	648	A126	Second deceleration detection function selection	0, 1	1	0		152	
	650	A128	Second brake opening current selection	0, 1	1	0		152	
	651	A129	Second brake operation frequency selection	0, 1	1	0		152	
Speed smoothing control	653	G410	Speed smoothing control	0 to 200%	0.1%	0%		163	
	654	G411	Speed smoothing cutoff frequency	0 to 120 Hz	0.01 Hz	20 Hz		163	

Function	Pr.	Pr. group	Name	Setting range	Minimum setting increments	Initial value FM	Initial value CA	Refer to page	Customer setting
Analog remote output function	655	M530	Analog remote output selection	0, 1, 10, 11	1	0		163	
	656	M531	Analog remote output 1	800 to 1200%	0.1%	1000%		163	
	657	M532	Analog remote output 2	800 to 1200%	0.1%	1000%		163	
	658	M533	Analog remote output 3	800 to 1200%	0.1%	1000%		163	
	659	M534	Analog remote output 4	800 to 1200%	0.1%	1000%		163	
Increased magnetic excitation deceleration	660	G130	Increased magnetic excitation deceleration operation selection	0, 1	1	0		164	
	661	G131	Magnetic excitation increase rate	0 to 40%, 9999	0.1%	9999		164	
	662	G132	Increased magnetic excitation current level	0 to 300%	0.1%	100%		164	
—	663	M060	Control circuit temperature signal output level	0 to 100°C	1°C	0°C		164	
—	665	G125	Regeneration avoidance frequency gain	0 to 200%	0.1%	100%		170	
—	668	A786	Power failure stop frequency gain	0 to 200%	0.1%	100%		150	
—	673 *19	G060	SF-PR slip amount adjustment operation selection	2, 4, 6, 9999	1	9999		164	
—	674 *19	G061	SF-PR slip amount adjustment gain	0 to 500%	0.1%	100%		164	
—	675	A805	User parameter auto storage function selection	1, 9999	1	9999		157	
Second droop control	679	G420	Second droop gain	0 to 100%, 9999	0.1%	9999		153	
	680	G421	Second droop filter time constant	0 to 1 s, 9999	0.01 s	9999		153	
	681	G422	Second droop function activation selection	0 to 2, 10, 11, 20 to 22, 9999	1	9999		153	
	682	G423	Second droop break point gain	0.1 to 100%, 9999	0.1%	9999		153	
	683	G424	Second droop break point torque	0.1 to 100%, 9999	0.1%	9999		153	
—	684	C000	Tuning data unit switchover	0, 1	1	0		136	
Maintenance	686	E712	Maintenance timer 2	0 (1 to 9998)	1	0		161	
	687	E713	Maintenance timer 2 warning output set time	0 to 9998, 9999	1	9999		161	
	688	E714	Maintenance timer 3	0 (1 to 9998)	1	0		161	
	689	E715	Maintenance timer 3 warning output set time	0 to 9998, 9999	1	9999		161	
—	690	H881	Deceleration check time	0 to 3600 s, 9999	0.1 s	1 s		164	
Electronic thermal O/L relay	692	H011	Second free thermal reduction frequency 1	0 to 590 Hz, 9999	0.01 Hz	9999		119	
	693	H012	Second free thermal reduction ratio 1	1 to 100%	1%	100%		119	
	694	H013	Second free thermal reduction frequency 2	0 to 590 Hz, 9999	0.01 Hz	9999		119	
	695	H014	Second free thermal reduction ratio 2	1 to 100%	1%	100%		119	
	696	H015	Second free thermal reduction frequency 3	0 to 590 Hz, 9999	0.01 Hz	9999		119	
—	699	T740	Input terminal filter	5 to 50 ms, 9999	1 ms	9999		146	

Function	Pr.	Pr. group	Name	Setting range	Minimum setting increments	Initial value FM	Initial value CA	Refer to page	Customer setting
Motor constants	702 *19	C106	Maximum motor frequency	0 to 400 Hz, 9999	0.01 Hz	9999		136	
	706 *19	C130	Induced voltage constant (phi f)	0 to 5000 mV/(rad/s), 9999	0.1 mV/(rad/s)	9999		136	
	707	C107	Motor inertia (integer)	10 to 999, 9999	1	9999		136	
	711 *19	C131	Motor Ld decay ratio	0 to 100%, 9999	0.1%	9999		136	
	712 *19	C132	Motor Lq decay ratio	0 to 100%, 9999	0.1%	9999		136	
	717 *19	C182	Starting resistance tuning compensation	0 to 200%, 9999	0.1%	9999		136	
	721 *19	C185	Starting magnetic pole position detection pulse width	0 to 6000 μs, 10000 to 16000 μs, 9999	1 μs	9999		136	
	724	C108	Motor inertia (exponent)	0 to 7, 9999	1	9999		136	
	725 *19	C133	Motor protection current level	100 to 500%, 9999	0.1%	9999		136	
	738 *19	C230	Second motor induced voltage constant (phi f)	0 to 5000 mV/(rad/s), 9999	0.1 mV/(rad/s)	9999		136	
	739 *19	C231	Second motor Ld decay ratio	0 to 100%, 9999	0.1%	9999		136	
	740 *19	C232	Second motor Lq decay ratio	0 to 100%, 9999	0.1%	9999		136	
	741 *19	C282	Second starting resistance tuning compensation	0 to 200%, 9999	0.1%	9999		136	
	742 *19	C285	Second motor magnetic pole detection pulse width	0 to 6000 μs, 10000 to 16000 μs, 9999	1 μs	9999		136	
	743 *19	C206	Second motor maximum frequency	0 to 400 Hz, 9999	0.01 Hz	9999		136	
	744	C207	Second motor inertia (integer)	10 to 999, 9999	1	9999		136	
	745	C208	Second motor inertia (exponent)	0 to 7, 9999	1	9999		136	
	746 *19	C233	Second motor protection current level	100 to 500%, 9999	0.1%	9999		136	
–	747 *19	G350	Second motor low-speed range torque characteristic selection	0, 9999	1	9999		165	
PID control	753	A650	Second PID action selection	0, 10, 11, 20, 21, 50, 51, 60, 61, 70, 71, 80, 81, 90, 91, 100, 101, 1000, 1001, 1010, 1011, 2000, 2001, 2010, 2011	1	0		143	
	754	A652	Second PID control automatic switchover frequency	0 to 590 Hz, 9999	0.01 Hz	9999		143	
	755	A651	Second PID action set point	0 to 100%, 9999	0.01%	9999		143	
	756	A653	Second PID proportional band	0.1 to 1000%, 9999	0.1%	100%		143	
	757	A654	Second PID integral time	0.1 to 3600 s, 9999	0.1 s	1 s		143	
	758	A655	Second PID differential time	0.01 to 10 s, 9999	0.01 s	9999		143	
	759	A600	PID unit selection	0 to 43, 9999	1	9999		143	
PID pre-charge function	760	A616	Pre-charge fault selection	0, 1	1	0		165	
	761	A617	Pre-charge ending level	0 to 100%, 9999	0.1%	9999		165	
	762	A618	Pre-charge ending time	0 to 3600 s, 9999	0.1 s	9999		165	
	763	A619	Pre-charge upper detection level	0 to 100%, 9999	0.1%	9999		165	
	764	A620	Pre-charge time limit	0 to 3600 s, 9999	0.1 s	9999		165	
	765	A656	Second pre-charge fault selection	0, 1	1	0		165	
	766	A657	Second pre-charge ending level	0 to 100%, 9999	0.1%	9999		165	
	767	A658	Second pre-charge ending time	0 to 3600 s, 9999	0.1 s	9999		165	
	768	A659	Second pre-charge upper detection level	0 to 100%, 9999	0.1%	9999		165	
	769	A660	Second pre-charge time limit	0 to 3600 s, 9999	0.1 s	9999		165	
Monitor function	774	M101	Operation panel monitor selection 1	1 to 3, 5 to 14, 17 to 20, 22 to 36, 38 to 46, 50 to 57, 61, 62, 64, 67, 71 to 75, 87 to 98, 100, 9999	1	9999		125	
	775	M102	Operation panel monitor selection 2		1	9999		125	
	776	M103	Operation panel monitor selection 3		1	9999		125	
–	777	A681 T053	4 mA input check operation frequency	0 to 590 Hz, 9999	0.01 Hz	9999		162	
–	778	A682 T054	4 mA input check filter	0 to 10 s	0.01 s	0 s		162	

Function	Pr.	Pr. group	Name	Setting range	Minimum setting increments	Initial value FM	Initial value CA	Refer to page	Customer setting
—	779	N014	Operation frequency during communication error	0 to 590 Hz, 9999	0.01 Hz	9999		139	
—	788 *19	G250	Low speed range torque characteristic selection	0, 9999	1	9999		165	
—	791 *19	F070	Acceleration time in low-speed range	0 to 3600 s, 9999	0.1 s	9999		118	
—	792 *19	F071	Deceleration time in low-speed range	0 to 3600 s, 9999	0.1 s	9999		118	
—	799	M520	Pulse increment setting for output power	0.1, 1, 10, 100, 1000 kWh	0.1 kWh	1 kWh		165	
—	800	G200	Control method selection	0 to 6, 9 to 14, 20, 100 to 106, 109 to 114	1	20		135	
—	801	H704	Output limit level	0 to 400%, 9999	0.1%	9999		122	
—	802	G102	Pre-excitation selection	0, 1	1	0		119	
Torque command	803	G210	Constant output range torque characteristic selection	0 to 2, 10, 11	1	0		122, 166	
	804	D400	Torque command source selection	0 to 6	1	0		122, 166	
	805	D401	Torque command value (RAM)	600 to 1400%	1%	1000%		122, 166	
	806	D402	Torque command value (RAM, EEPROM)	600 to 1400%	1%	1000%		122, 166	
Speed limit	807	H410	Speed limit selection	0 to 2	1	0		166	
	808	H411	Forward rotation speed limit/speed limit	0 to 400 Hz	0.01 Hz	60 Hz	50 Hz	166	
	809	H412	Reverse rotation speed limit/reverse-side speed limit	0 to 400 Hz, 9999	0.01 Hz	9999		166	
Torque limit	810	H700	Torque limit input method selection	0 to 2	1	0		122	
	811	D030	Set resolution switchover	0, 1, 10, 11	1	0		122, 124	
	812	H701	Torque limit level (regeneration)	0 to 400%, 9999	0.1%	9999		122	
	813	H702	Torque limit level (3rd quadrant)	0 to 400%, 9999	0.1%	9999		122	
	814	H703	Torque limit level (4th quadrant)	0 to 400%, 9999	0.1%	9999		122	
	815	H710	Torque limit level 2	0 to 400%, 9999	0.1%	9999		122	
	816	H720	Torque limit level during acceleration	0 to 400%, 9999	0.1%	9999		122	
	817	H721	Torque limit level during deceleration	0 to 400%, 9999	0.1%	9999		122	
Easy gain tuning	818	C112	Easy gain tuning response level setting	1 to 15	1	2		167	
	819	C113	Easy gain tuning selection	0 to 2	1	0		167	
Adjustment function	820	G211	Speed control P gain 1	0 to 1000%	1%	60%		167	
	821	G212	Speed control integral time 1	0 to 20 s	0.001 s	0.333 s		167	
	822	T003	Speed setting filter 1	0 to 5 s, 9999	0.001 s	9999		132	
	823 *9	G215	Speed detection filter 1	0 to 0.1 s	0.001 s	0.001 s		167	
	824	G213	Torque control P gain 1 (current loop proportional gain)	0 to 500%	1%	100%		167	
	825	G214	Torque control integral time 1 (current loop integral time)	0 to 500 ms	0.1 ms	5 ms		167	
	826	T004	Torque setting filter 1	0 to 5 s, 9999	0.001 s	9999		132	
	827	G216	Torque detection filter 1	0 to 0.1 s	0.001 s	0 s		167	
	828	G224	Model speed control gain	0 to 1000%	1%	60%		168	
	829 *9	A546	Number of machine end encoder pulses	0 to 4096	1	9999		156	
	830	G311	Speed control P gain 2	0 to 1000%, 9999	1%	9999		167	
	831	G312	Speed control integral time 2	0 to 20 s, 9999	0.001 s	9999		167	
	832	T005	Speed setting filter 2	0 to 5 s, 9999	0.001 s	9999		132	
	833 *9	G315	Speed detection filter 2	0 to 0.1 s, 9999	0.001 s	9999		167	
	834	G313	Torque control P gain 2	0 to 500%, 9999	1%	9999		167	
	835	G314	Torque control integral time 2	0 to 500 ms, 9999	0.1 ms	9999		167	
	836	T006	Torque setting filter 2	0 to 5 s, 9999	0.001 s	9999		132	
	837	G316	Torque detection filter 2	0 to 0.1 s, 9999	0.001 s	9999		167	

Function	Pr.	Pr. group	Name	Setting range	Minimum setting increments	Initial value FM	Initial value CA	Refer to page	Customer setting
Torque bias	840	G230	Torque bias selection	0 to 3, 24, 25, 9999	1	9999		168	
	841	G231	Torque bias 1	600 to 1400%, 9999	1%	9999		168	
	842	G232	Torque bias 2	600 to 1400%, 9999	1%	9999		168	
	843	G233	Torque bias 3	600 to 1400%, 9999	1%	9999		168	
	844	G234	Torque bias filter	0 to 5s, 9999	0.001 s	9999		168	
	845	G235	Torque bias operation time	0 to 5s, 9999	0.01 s	9999		168	
	846	G236	Torque bias balance compensation	0 to 10 V, 9999	0.1 V	9999		168	
	847	G237	Fall-time torque bias terminal 1 bias	0 to 400%, 9999	1%	9999		168	
	848	G238	Fall-time torque bias terminal 1 gain	0 to 400%, 9999	1%	9999		168	
Additional function	849	T007	Analog input offset adjustment	0 to 200%	0.1%	100%		132	
	850	G103	Brake operation selection	0 to 2	1	0		119	
	851 *9	C240	Control terminal option-Number of encoder pulses	0 to 4096	1	2048		156	
	852 *9	C241	Control terminal option-Encoder rotation direction	0, 1, 100, 101	1	1		156	
	853 *9	H417	Speed deviation time	0 to 100 s	0.1 s	1 s		153	
	854	G217	Excitation ratio	0 to 100%	1%	100%		169	
	855 *9	C248	Control terminal option-Signal loss detection enable/disable selection	0, 1	1	0		157	
	858	T040	Terminal 4 function assignment	0, 1, 4, 9999	1	0		169	
	859	C126	Torque current/Rated PM motor current	0 to 500 A, 9999 *2	0.01 A *2	9999		136	
				0 to 3600 A, 9999 *3	0.1 A *3				
	860	C226	Second motor torque current/Rated PM motor current	0 to 500 A, 9999 *2	0.01 A *2	9999		136	
				0 to 3600 A, 9999 *3	0.1 A *3				
	862 *9	C242	Encoder option selection	0, 1	1	0		156	
	863 *9	M600	Control terminal option-Encoder pulse division ratio	1 to 32767	1	1		169	
	864	M470	Torque detection	0 to 400%	0.1%	150%		169	
	865	M446	Low speed detection	0 to 590 Hz	0.01 Hz	1.5 Hz		125	
Indication function	866	M042	Torque monitoring reference	0 to 400%	0.1%	150%		127	
—	867	M321	AM output filter	0 to 5 s	0.01 s	0.01 s		171	
—	868	T010	Terminal 1 function assignment	0 to 6, 9999	1	0		169	
—	869	M334	Current output filter	0 to 5 s	0.01 s	-	0.02 s	171	
—	870	M440	Speed detection hysteresis	0 to 5 Hz	0.01 Hz	0 Hz		125	
Protective Functions	872 *15	H201	Input phase loss protection selection	0, 1	1	0		149	
	873 *9	H415	Speed limit	0 to 400 Hz	0.01 Hz	20 Hz		153	
	874	H730	OLT level setting	0 to 400%	0.1%	150%		122	
	875	H030	Fault definition	0, 1	1	0		169	
—	876 *9	H022	Thermal protector input	0, 1	1	1		119	
Control system functions	877	G220	Speed feed forward control/model adaptive speed control selection	0 to 2	1	0		168	
	878	G221	Speed feed forward filter	0 to 1 s	0.01 s	0 s		168	
	879	G222	Speed feed forward torque limit	0 to 400%	0.1%	150%		168	
	880	C114	Load inertia ratio	0 to 200 times	0.1 times	7 times		168	
	881	G223	Speed feed forward gain	0 to 1000%	1%	0%		168	
Regeneration avoidance function	882	G120	Regeneration avoidance operation selection	0 to 2	1	0		170	
	883	G121	Regeneration avoidance operation level	300 to 1200 V	0.1V	DC380 V *7		170	
						DC760 V *8			
	884	G122	Regeneration avoidance at deceleration detection sensitivity	0 to 5	1	0		170	
	885	G123	Regeneration avoidance compensation frequency limit value	0 to 590 Hz, 9999	0.01 Hz	6 Hz		170	
	886	G124	Regeneration avoidance voltage gain	0 to 200%	0.1%	100%		170	

Function	Pr.	Pr. group	Name	Setting range	Minimum setting increments	Initial value FM	Initial value CA	Refer to page	Customer setting
Free parameters	888	E420	Free parameter 1	0 to 9999	1	9999		170	
	889	E421	Free parameter 2	0 to 9999	1	9999		170	
Energy saving monitor	891	M023	Cumulative power monitor digit shifted times	0 to 4, 9999	1	9999		125, 170	
	892	M200	Load factor	30 to 150%	0.1%	100%		170	
	893	M201	Energy saving monitor reference (motor capacity)	0.1 to 55 kW *2 0 to 3600 kW *3	0.01 kW *2 0.1 kW *3	Inverter rated capacity		170	
	894	M202	Control selection during commercial power-supply operation	0 to 3	1	0		170	
	895	M203	Power saving rate reference value	0, 1, 9999	1	9999		170	
	896	M204	Power unit cost	0 to 500, 9999	0.01	9999		170	
	897	M205	Power saving monitor average time	0 to 1000 h, 9999	1 h	9999		170	
	898	M206	Power saving cumulative monitor clear	0, 1, 10, 9999	1	9999		170	
	899	M207	Operation time rate (estimated value)	0 to 100%, 9999	0.1%	9999		170	
Calibration parameters	C0 (900) *10	M310	FM/CA terminal calibration	-	-	-		171	
	C1 (901) *10	M320	AM terminal calibration	-	-	-		171	
	C2 (902) *10	T200	Terminal 2 frequency setting bias frequency	0 to 590 Hz	0.01 Hz	0 Hz		142	
	C3 (902) *10	T201	Terminal 2 frequency setting bias	0 to 300%	0.1%	0%		142	
	125 (903) *10	T202	Terminal 2 frequency setting gain frequency	0 to 590 Hz	0.01 Hz	60 Hz	50 Hz	142	
	C4 (903) *10	T203	Terminal 2 frequency setting gain	0 to 300%	0.1%	100%		142	
	C5 (904) *10	T400	Terminal 4 frequency setting bias frequency	0 to 590 Hz	0.01 Hz	0 Hz		142	
	C6 (904) *10	T401	Terminal 4 frequency setting bias	0 to 300%	0.1%	20%		142	
	126 (905) *10	T402	Terminal 4 frequency setting gain frequency	0 to 590 Hz	0.01 Hz	60 Hz	50 Hz	142	
	C7 (905) *10	T403	Terminal 4 frequency setting gain	0 to 300%	0.1%	100%		142	
	C12 (917) *10	T100	Terminal 1 bias frequency (speed)	0 to 590 Hz	0.01 Hz	0 Hz		142	
	C13 (917) *10	T101	Terminal 1 bias (speed)	0 to 300%	0.1%	0%		142	
	C14 (918) *10	T102	Terminal 1 gain frequency (speed)	0 to 590 Hz	0.01 Hz	60 Hz	50 Hz	142	
	C15 (918) *10	T103	Terminal 1 gain (speed)	0 to 300%	0.1%	100%		142	
	C16 (919) *10	T110	Terminal 1 bias command (torque/ magnetic flux)	0 to 400%	0.1%	0%		142	

Function	Pr.	Pr. group	Name	Setting range	Minimum setting increments	Initial value FM	Initial value CA	Refer to page	Customer setting
Calibration parameters	C17 (919) *10	T111	Terminal 1 bias (torque/magnetic flux)	0 to 300%	0.1%	0%		142	
	C18 (920) *10	T112	Terminal 1 gain command (torque/ magnetic flux)	0 to 400%	0.1%	150%		142	
	C19 (920) *10	T113	Terminal 1 gain (torque/magnetic flux)	0 to 300%	0.1%	100%		142	
	C8 (930) *10	M330	Current output bias signal	0 to 100%	0.1%	-	0%	171	
	C9 (930) *10	M331	Current output bias current	0 to 100%	0.1%	-	0%	171	
	C10 (931) *10	M332	Current output gain signal	0 to 100%	0.1%	-	100%	171	
	C11 (931) *10	M333	Current output gain current	0 to 100%	0.1%	-	100%	171	
	C38 (932) *10	T410	Terminal 4 bias command (torque/ magnetic flux)	0 to 400%	0.1%	0%		142	
	C39 (932) *10	T411	Terminal 4 bias (torque/magnetic flux)	0 to 300%	0.1%	20%		142	
	C40 (933) *10	T412	Terminal 4 gain command (torque/ magnetic flux)	0 to 400%	0.1%	150%		142	
	C41 (933) *10	T413	Terminal 4 gain (torque/magnetic flux)	0 to 300%	0.1%	100%		142	
	C42 (934) *10	A630	PID display bias coefficient	0 to 500, 9999	0.01	9999		143	
	C43 (934) *10	A631	PID display bias analog value	0 to 300%	0.1%	20%		143	
	C44 (935) *10	A632	PID display gain coefficient	0 to 500, 9999	0.01	9999		143	
	C45 (935) *10	A633	PID display gain analog value	0 to 300%	0.1%	100%		143	
—	977	E302	Input voltage mode selection	0, 1	1	0		171	
—	989	E490	Parameter copy alarm release	10 *2 100 *3	1	10 *2 100 *3		171	
PU	990	E104	PU buzzer control	0, 1	1	1		172	
	991	E105	PU contrast adjustment	0 to 63	1	58		172	
Monitor function	992	M104	Operation panel setting dial push monitor selection	0 to 3, 5 to 14, 17 to 20, 22 to 36, 38 to 46, 50 to 57, 61, 62, 64, 67, 71 to 75, 87 to 98, 100	1	0		125	
Droop control	994	G403	Droop break point gain	0.1 to 100%, 9999	0.1%	9999		153	
	995	G404	Droop break point torque	0.1 to 100%	0.1%	100%		153	
—	997	H103	Fault initiation	0 to 255, 9999	1	9999		172	
—	998 *19	E430	PM parameter initialization Simple	0, 3003, 3103, 8009, 8109, 9009, 9109	1	0		241	
—	999	E431	Automatic parameter setting Simple	1, 2, 10, 11, 12, 13, 20, 21, 9999	1	9999		172	
—	1000	E108	Direct setting selection	0 to 2	1	0		172	

Function	Pr.	Pr. group	Name	Setting range	Minimum setting increments	Initial value FM	Initial value CA	Refer to page	Customer setting
–	1002 *19	C150	Lq tuning target current adjustment coefficient	50 to 150%, 9999	0.1%	9999		136	
Additional function	1003	G601	Notch filter frequency	0, 8 to 1250 Hz	1 Hz	0		173	
	1004	G602	Notch filter depth	0 to 3	1	0		173	
	1005	G603	Notch filter width	0 to 3	1	0		173	
Clock function	1006	E020	Clock (year)	2000 to 2099	1	2000		173	
	1007	E021	Clock (month, day)	1/1 to 12/31	1	101		173	
	1008	E022	Clock (hour, minute)	0:00 to 23:59	1	0		173	
–	1015	A607	Integral stop selection at limited frequency	0 to 2, 10 to 12	1	0		143	
–	1016	H021	PTC thermistor protection detection time	0 to 60 s	1 s	0 s		119	
–	1018	M045	Monitor with sign selection	0, 9999	1	9999		125	
Trace function	1020	A900	Trace operation selection	0 to 4	1	0		174	
	1021	A901	Trace mode selection	0 to 2	1	0		174	
	1022	A902	Sampling cycle	0 to 9	1	2		174	
	1023	A903	Number of analog channels	1 to 8	1	4		174	
	1024	A904	Sampling auto start	0, 1	1	0		174	
	1025	A905	Trigger mode selection	0 to 4	1	0		174	
	1026	A906	Number of sampling before trigger	0 to 100%	1%	90%		174	
	1027	A910	Analog source selection (1ch)	1 to 3, 5 to 14, 17 to 20, 22 to 24, 32 to 36, 39 to 42, 46, 52 to 54, 61, 62, 64, 67, 71 to 75 87 to 98, 201 to 213, 222 to 227, 230 to 232, 235 to 238	1	201		174	
	1028	A911	Analog source selection (2ch)			202		174	
	1029	A912	Analog source selection (3ch)			203		174	
	1030	A913	Analog source selection (4ch)			204		174	
	1031	A914	Analog source selection (5ch)			205		174	
	1032	A915	Analog source selection (6ch)			206		174	
	1033	A916	Analog source selection (7ch)			207		174	
	1034	A917	Analog source selection (8ch)			208		174	
	1035	A918	Analog trigger channel	1 to 8	1	1		174	
	1036	A919	Analog trigger operation selection	0, 1	1	0		174	
	1037	A920	Analog trigger level	600 to 1400	1	1000		174	
	1038	A930	Digital source selection (1ch)	1 to 255	1	1		174	
	1039	A931	Digital source selection (2ch)			2		174	
	1040	A932	Digital source selection (3ch)			3		174	
	1041	A933	Digital source selection (4ch)			4		174	
	1042	A934	Digital source selection (5ch)			5		174	
	1043	A935	Digital source selection (6ch)			6		174	
	1044	A936	Digital source selection (7ch)			7		174	
	1045	A937	Digital source selection (8ch)			8		174	
	1046	A938	Digital trigger channel	1 to 8	1	1		174	
	1047	A939	Digital trigger operation selection	0, 1	1	0		174	
–	1048	E106	Display-off waiting time	0 to 60 min	1 min	0 min		174	
–	1049	E110	USB host reset	0, 1	1	0		174	

Function	Pr.	Pr. group	Name	Setting range	Minimum setting increments	Initial value FM	Initial value CA	Refer to page	Customer setting
Anti-sway control	1072	A310	DC brake judgment time for anti-sway control operation	0 to 10 s	0.1 s	3 s		174	
	1073	A311	Anti-sway control operation selection	0, 1	1	0		174	
	1074	A312	Anti-sway control frequency	0.05 to 3 Hz, 9999	0.001 Hz	1 Hz		174	
	1075	A313	Anti-sway control depth	0 to 3	1	0		174	
	1076	A314	Anti-sway control width	0 to 3	1	0		174	
	1077	A315	Rope length	0.1 to 50 m	0.1 m	1 m		174	
	1078	A316	Trolley weight	1 to 50000 kg	1 kg	1 kg		174	
	1079	A317	Load weight	1 to 50000 kg	1 kg	1 kg		174	
–	1103	F040	Deceleration time at emergency stop	0 to 3600 s	0.1 s	5 s		174	
Monitor function	1106	M050	Torque monitor filter	0 to 5 s, 9999	0.01 s	9999		125	
	1107	M051	Running speed monitor filter	0 to 5 s, 9999	0.01 s	9999		125	
	1108	M052	Excitation current monitor filter	0 to 5 s, 9999	0.01 s	9999		125	
–	1113	H414	Speed limit method selection	0 to 2, 10, 9999	1	0		166	
–	1114	D403	Torque command reverse selection	0, 1	1	1		166	
–	1115	G218	Speed control integral term clear time	0 to 9998 ms	1 ms	0 s		167	
–	1116	G206	Constant output range speed control P gain compensation	0 to 100%	0.1%	0%		167	
–	1117	G261	Speed control P gain 1 (per-unit system)	0 to 300, 9999	0.01	9999		167	
–	1118	G361	Speed control P gain 2 (per-unit system)	0 to 300, 9999	0.01	9999		167	
–	1119	G262	Model speed control gain (per-unit system)	0 to 300, 9999	0.01	9999		168	
–	1121	G260	Per-unit speed control reference frequency	0 to 400 Hz	0.01 Hz	120 Hz *2		167, 168	
						60 Hz *3			
PID control	1134	A605	PID upper limit manipulated value	0 to 100%	0.1%	100%		143	
	1135	A606	PID lower limit manipulated value	0 to 100%	0.1%	100%		143	
	1136	A670	Second PID display bias coefficient	0 to 500, 9999	0.01	9999		143	
	1137	A671	Second PID display bias analog value	0 to 300%	0.1%	20%		143	
	1138	A672	Second PID display gain coefficient	0 to 500, 9999	0.01	9999		143	
	1139	A673	Second PID display gain analog value	0 to 300%	0.1%	100%		143	
	1140	A664	Second PID set point/deviation input selection	1 to 5	1	2		143	
	1141	A665	Second PID measured value input selection	1 to 5	1	3		143	
	1142	A640	Second PID unit selection	0 to 43, 9999	1	9999		143	
	1143	A641	Second PID upper limit	0 to 100%, 9999	0.1%	9999		143	
	1144	A642	Second PID lower limit	0 to 100%, 9999	0.1%	9999		143	
	1145	A643	Second PID deviation limit	0 to 100%, 9999	0.1%	9999		143	
	1146	A644	Second PID signal operation selection	0 to 3, 10 to 13	1	0		143	
	1147	A661	Second output interruption detection time	0 to 3600 s, 9999	0.1 s	1 s		143	
	1148	A662	Second output interruption detection level	0 to 590 Hz	0.01 Hz	0 Hz		143	
	1149	A663	Second output interruption cancel level	900 to 1100%	0.1%	1000%		143	
PLC function	1150 to 1199	A810 to A859	PLC function user parameters 1 to 50	0 to 65535	1	0		157	
–	1220 *23	B100	Target position/speed selection	0 to 2	1	0		-	

Function	Pr.	Pr. group	Name	Setting range	Minimum setting increments	Initial value FM	Initial value CA	Refer to page	Customer setting
Simple position control	1221	B101	Start command edge detection selection	0, 1	1	0		158	
	1222	B120	First positioning acceleration time	0.01 to 360 s	0.01 s	5 s		158	
	1223	B121	First positioning deceleration time	0.01 to 360 s	0.01 s	5 s		158	
	1224	B122	First positioning dwell time	0 to 20000 ms	1 ms	0 ms		158	
	1225	B123	First positioning sub-function	0 to 2, 10 to 12, 100 to 102, 110 to 112	1	10		158	
	1226	B124	Second positioning acceleration time	0.01 to 360 s	0.01 s	5 s		158	
	1227	B125	Second positioning deceleration time	0.01 to 360 s	0.01 s	5 s		158	
	1228	B126	Second positioning dwell time	0 to 20000 ms	1 ms	0 ms		158	
	1229	B127	Second positioning sub-function	0 to 2, 10 to 12, 100 to 102, 110 to 112	1	10		158	
	1230	B128	Third positioning acceleration time	0.01 to 360 s	0.01 s	5 s		158	
	1231	B129	Third positioning deceleration time	0.01 to 360 s	0.01 s	5 s		158	
	1232	B130	Third positioning dwell time	0 to 20000 ms	1 ms	0 ms		158	
	1233	B131	Third positioning sub-function	0 to 2, 10 to 12, 100 to 102, 110 to 112	1	10		158	
	1234	B132	Fourth positioning acceleration time	0.01 to 360 s	0.01 s	5 s		158	
	1235	B133	Fourth positioning deceleration time	0.01 to 360 s	0.01 s	5 s		158	
	1236	B134	Fourth positioning dwell time	0 to 20000 ms	1 ms	0 ms		158	
	1237	B135	Fourth positioning sub-function	0 to 2, 10 to 12, 100 to 102, 110 to 112	1	10		158	
	1238	B136	Fifth positioning acceleration time	0.01 to 360 s	0.01 s	5 s		158	
	1239	B137	Fifth positioning deceleration time	0.01 to 360 s	0.01 s	5 s		158	
	1240	B138	Fifth positioning dwell time	0 to 20000 ms	1 ms	0 ms		158	
	1241	B139	Fifth positioning sub-function	0 to 2, 10 to 12, 100 to 102, 110 to 112	1	10		158	
	1242	B140	Sixth positioning acceleration time	0.01 to 360 s	0.01 s	5 s		158	
	1243	B141	Sixth positioning deceleration time	0.01 to 360 s	0.01 s	5 s		158	
	1244	B142	Sixth positioning dwell time	0 to 20000 ms	1 ms	0 ms		158	
	1245	B143	Sixth positioning sub-function	0 to 2, 10 to 12, 100 to 102, 110 to 112	1	10		158	
	1246	B144	Seventh positioning acceleration time	0.01 to 360 s	0.01 s	5 s		158	
	1247	B145	Seventh positioning deceleration time	0.01 to 360 s	0.01 s	5 s		158	
	1248	B146	Seventh positioning dwell time	0 to 20000 ms	1 ms	0 ms		158	
	1249	B147	Seventh positioning sub-function	0 to 2, 10 to 12, 100 to 102, 110 to 112	1	10		158	
	1250	B148	Eighth positioning acceleration time	0.01 to 360 s	0.01 s	5 s		158	
	1251	B149	Eighth positioning deceleration time	0.01 to 360 s	0.01 s	5 s		158	
	1252	B150	Eighth positioning dwell time	0 to 20000 ms	1 ms	0 ms		158	
	1253	B151	Eighth positioning sub-function	0 to 2, 10 to 12, 100 to 102, 110 to 112	1	10		158	
	1254	B152	Ninth positioning acceleration time	0.01 to 360 s	0.01 s	5 s		158	

Function	Pr.	Pr. group	Name	Setting range	Minimum setting increments	Initial value FM	Initial value CA	Refer to page	Customer setting
Simple position control	1255	B153	Ninth positioning deceleration time	0.01 to 360 s	0.01 s	5 s		158	
	1256	B154	Ninth positioning dwell time	0 to 20000 ms	1 ms	0 ms		158	
	1257	B155	Ninth positioning sub-function	0 to 2, 10 to 12, 100 to 102, 110 to 112	1	10		158	
	1258	B156	Tenth positioning acceleration time	0.01 to 360 s	0.01 s	5 s		158	
	1259	B157	Tenth positioning deceleration time	0.01 to 360 s	0.01 s	5 s		158	
	1260	B158	Tenth positioning dwell time	0 to 20000 ms	1 ms	0 ms		158	
	1261	B159	Tenth positioning sub-function	0 to 2, 10 to 12, 100 to 102, 110 to 112	1	10		158	
	1262	B160	Eleventh positioning acceleration time	0.01 to 360 s	0.01 s	5 s		158	
	1263	B161	Eleventh positioning deceleration time	0.01 to 360 s	0.01 s	5 s		158	
	1264	B162	Eleventh positioning dwell time	0 to 20000 ms	1 ms	0 ms		158	
	1265	B163	Eleventh positioning sub-function	0 to 2, 10 to 12, 100 to 102, 110 to 112	1	10		158	
	1266	B164	Twelfth positioning acceleration time	0.01 to 360 s	0.01 s	5 s		158	
	1267	B165	Twelfth positioning deceleration time	0.01 to 360 s	0.01 s	5 s		158	
	1268	B166	Twelfth positioning dwell time	0 to 20000 ms	1 ms	0 ms		158	
	1269	B167	Twelfth positioning sub-function	0 to 2, 10 to 12, 100 to 102, 110 to 112	1	10		158	
	1270	B168	Thirteenth positioning acceleration time	0.01 to 360 s	0.01 s	5 s		158	
	1271	B169	Thirteenth positioning deceleration time	0.01 to 360 s	0.01 s	5 s		158	
	1272	B170	Thirteenth positioning dwell time	0 to 20000 ms	1 ms	0 ms		158	
	1273	B171	Thirteenth positioning sub-function	0 to 2, 10 to 12, 100 to 102, 110 to 112	1	10		158	
	1274	B172	Fourteenth positioning acceleration time	0.01 to 360 s	0.01 s	5 s		158	
	1275	B173	Fourteenth positioning deceleration time	0.01 to 360 s	0.01 s	5 s		158	
	1276	B174	Fourteenth positioning dwell time	0 to 20000 ms	1 ms	0 ms		158	
	1277	B175	Fourteenth positioning sub-function	0 to 2, 10 to 12, 100 to 102, 110 to 112	1	10		158	
	1278	B176	Fifteenth positioning acceleration time	0.01 to 360 s	0.01 s	5 s		158	
	1279	B177	Fifteenth positioning deceleration time	0.01 to 360 s	0.01 s	5 s		158	
	1280	B178	Fifteenth positioning dwell time	0 to 20000 ms	1 ms	0 ms		158	
	1281	B179	Fifteenth positioning sub-function	0, 2, 10, 12, 100, 102, 110, 112	1	10		158	
	1282	B180	Home position return method selection	0 to 6	1	4		158	
	1283	B181	Home position return speed	0 to 30 Hz	0.01 Hz	2 Hz		158	
	1284	B182	Home position return creep speed	0 to 10 Hz	0.01 Hz	0.5 Hz		158	
	1285	B183	Home position shift amount lower 4 digits	0 to 9999	1	0		158	
	1286	B184	Home position shift amount upper 4 digits	0 to 9999	1	0		158	
	1287	B185	Travel distance after proximity dog ON lower 4 digits	0 to 9999	1	2048		158	
	1288	B186	Travel distance after proximity dog ON upper 4 digits	0 to 9999	1	0		158	

Function	Pr.	Pr. group	Name	Setting range	Minimum setting increments	Initial value FM	Initial value CA	Refer to page	Customer setting
Simple position control	1289	B187	Home position return stopper torque	0 to 200%	0.1%	40%		158	
	1290	B188	Home position return stopper waiting time	0 to 10 s	0.1 s	0.5 s		158	
	1292	B190	Position control terminal input selection	0, 1	1	0		158	
	1293	B191	Roll feeding mode selection	0, 1	1	0		158	
	1294	B192	Position detection lower 4 digits	0 to 9999	1	0		160	
	1295	B193	Position detection upper 4 digits	0 to 9999	1	0		160	
	1296	B194	Position detection selection	0 to 2	1	0		160	
	1297	B195	Position detection hysteresis width	0 to 32767	1	0		160	
—	1298	B013	Second position control gain	0 to 150 s^{-1}	1 s^{-1}	25 s^{-1}		160	
—	1299	G108	Second pre-excitation selection	0, 1	1	0		119	
—	1300 to 1343	N500 to N543	Communication option parameters. For details, refer to the Instruction Manual of the option.						
—	1348	G263	P/PI control switchover frequency	0 to 400 Hz	0.01 Hz	0 Hz		167	
—	1349	G264	Emergency stop operation selection	0, 1, 10, 11	1	0		174	
—	1350 to 1359	N550 to N559	Communication option parameters. For details, refer to the Instruction Manual of the option.						
—	1410	A170	Starting times lower 4 digits	0 to 9999	1	0		175	
—	1411	A171	Starting times upper 4 digits	0 to 9999	1	0		175	
—	1412 *19	C135	Motor induced voltage constant (phi f) exponent	0 to 2, 9999	1	9999		136	
—	1413 *19	C235	Second motor induced voltage constant (phi f) exponent	0 to 2, 9999	1	9999		136	
Load characteristics fault detection	1480 *21	H520	Load characteristics measurement mode	0, 1 (2 to 5, 81 to 85)	1	0		176	
	1481 *21	H521	Load characteristics load reference 1	0 to 400%, 8888, 9999	0.1%	9999		176	
	1482 *21	H522	Load characteristics load reference 2	0 to 400%, 8888, 9999	0.1%	9999		176	
	1483 *21	H523	Load characteristics load reference 3	0 to 400%, 8888, 9999	0.1%	9999		176	
	1484 *21	H524	Load characteristics load reference 4	0 to 400%, 8888, 9999	0.1%	9999		176	
	1485 *21	H525	Load characteristics load reference 5	0 to 400%, 8888, 9999	0.1%	9999		176	
	1486 *21	H526	Load characteristics maximum frequency	0 to 590 Hz	0.01 Hz	60 Hz	50 Hz	176	
	1487 *21	H527	Load characteristics minimum frequency	0 to 590 Hz	0.01 Hz	6 Hz		176	
	1488 *21	H531	Upper limit warning detection width	0 to 400%, 9999	0.1%	20%		176	
	1489 *21	H532	Lower limit warning detection width	0 to 400%, 9999	0.1%	20%		176	
	1490 *21	H533	Upper limit fault detection width	0 to 400%, 9999	0.1%	9999		176	
	1491 *21	H534	Lower limit fault detection width	0 to 400%, 9999	0.1%	9999		176	
	1492 *21	H535	Load status detection signal delay time / load reference measurement waiting time	0 to 60 s	0.1 s	1 s		176	
—	1499	E415	Parameter for manufacturer setting. Do not set.						

Function	Pr.	Pr. group	Name	Setting range	Minimum setting increments	Initial value FM	Initial value CA	Refer to page	Customer setting
Clear parameters	Pr.CLR		Parameter clear	(0), 1	1	0		171	
	ALL.CL		All parameter clear	(0), 1	1	0		171	
	Err.CL		Fault history clear	(0), 1	1	0		171	
—	Pr.CPY		Parameter copy	(0), 1 to 3	1	0		171	
—	Pr.CHG		Initial value change list	—	1	0		171	
—	IPM		IPM initialization	0, 3003	1	0		241	
—	AUTO		Automatic parameter setting	—	—	—		172	
—	Pr.MD		Group parameter setting	(0), 1, 2	1	0		70	

*1 Differ according to capacities.
6%: FR-A820-00077(0.75K) or lower, FR-A840-00038(0.75K) or lower
4%: FR-A820-00105(1.5K) to FR-A820-00250(3.7K), FR-A840-00052(1.5K) to FR-A840-00126(3.7K)
3%: FR-A820-00340(5.5K), FR-A820-00490(7.5K), FR-A840-00170(5.5K), FR-A840-00250(7.5K)
2%: FR-A820-00630(11K) to FR-A820-03160(55K), FR-A840-00310(11K) to FR-A840-01800(55K)
1%: FR-A820-03800(75K) or higher, FR-A840-02160(75K) or higher
*2 The setting range or initial value for the FR-A820-03160(55K) or lower and FR-A840-01800(55K) or lower.
*3 The setting range or initial value for the FR-A820-03800(75K) or higher and FR-A840-02160(75K) or higher.
*4 The initial value for the FR-A820-00490(7.5K) or lower and FR-A840-00250(7.5K) or lower.
*5 The initial value for the FR-A820-00630(11K) or higher and FR-A840-00310(11K) or higher.
*6 Differ according to capacities.
4%: FR-A820-00490(7.5K) or lower, FR-A840-00250(7.5K) or lower
2%: FR-A820-00630(11K) to FR-A820-03160(55K), FR-A840-00310(11K) to FR-A840-01800(55K)
1%: FR-A820-03800(75K) or higher, FR-A840-02160(75K) or higher
*7 The value for the 200 V class.
*8 The value for the 400 V class.
*9 The setting is available only when a vector control compatible option is installed. Refer to the Instruction Manual of each option for details.
*10 The parameter number in parentheses is the one for use with the LCD operation panel and the parameter unit.
*11 The setting range or initial value for the standard model.
*12 The setting range or initial value for the separated converter type.
*13 The setting range or initial value for the IP55 compatible model.
*14 The setting is available for the standard model only.
*15 The setting is available only for standard models and IP55 compatible models.
*16 The setting is available only for the FR-A800-GF or when a compatible plug-in option is installed.
*17 The setting range differs for the FR-A800-E. (Refer to **page 99**.)
*18 The setting is not available for the FR-A800-E.
*19 Parameter for manufacturer setting for the FR-A842-P. Do not set.
*20 The setting range differs for the FR-A842-P. (Refer to **page 99**.)
*21 The setting is not available for the FR-A842-P.
*22 The setting is available for the FR-A800-GN or FR-A800-GF, or when a compatible plug-in option is installed.
*23 The setting is available when a compatible HMS network option is installed. For details, refer to the Instruction Manual (Detailed).

● List of parameters for the FR-A800-E Ethernet communication (by parameter number)

The following table shows the extended parameters for the FR-A800-E as compared to the standard inverters. Set the parameters according to the application.

Function	Pr.	Pr. group	Name	Setting range	Minimum setting increments	Initial value	Refer to page	Customer setting
Output terminal function assignment	190	M400	RUN terminal function selection	242, 342 *1	1	0	147	
	191	M401	SU terminal function selection		1	1	147	
	192	M402	IPF terminal function selection		1	2 *2 9999 *3	147	
	193	M403	OL terminal function selection		1	3	147	
	194	M404	FU terminal function selection		1	4	147	
	195	M405	ABC1 terminal function selection		1	99	147	
	196	M406	ABC2 terminal function selection		1	9999	147	
	313	M410	DO0 output selection	242, 342 *1	1	9999	147	
	314	M411	DO1 output selection		1	9999	147	
	315	M412	DO2 output selection		1	9999	147	
Ethernet communication	550	D012	NET mode operation command source selection	0, 1, 5, 9999	1	9999	155	
	551	D013	PU mode operation command source selection	1 to 3, 5, 9999	1	9999	155	
	1124	N681	Station number in inverter-to-inverter link	0 to 5, 9999	1	9999	175	
	1125	N682	Number of inverters in inverter-to-inverter link system	2 to 6	1	2	175	
	1424	N650	Ethernet communication network number	1 to 239	1	1	139	
	1425	N651	Ethernet communication station number	1 to 120	1	1	139	
	1426	N641	Link speed and duplex mode selection	0 to 4	1	0	139	
	1427	N630	Ethernet function selection 1	502, 5000 to 5002, 5006 to 5008, 5010 to 5013, 9999, 45237	1	5001	139	
	1428	N631	Ethernet function selection 2	502, 5000 to 5002, 5006 to 5008, 5010 to 5013, 9999, 45237	1	45237	139	
	1429	N632	Ethernet function selection 3	502, 5000 to 5002, 5006 to 5008, 5010 to 5013, 9999, 45237	1	9999	139	
	1431	N643	Ethernet signal loss detection function selection	0 to 3	1	0	139	
	1432	N644	Ethernet communication check time interval	0 to 999.8 s, 9999	0.1 s	9999	139	
	1434	N600	Ethernet IP address 1	0 to 255	1	192	139	
	1435	N601	Ethernet IP address 2	0 to 255	1	168	139	
	1436	N602	Ethernet IP address 3	0 to 255	1	50	139	
	1437	N603	Ethernet IP address 4	0 to 255	1	1	139	
	1438	N610	Subnet mask 1	0 to 255	1	255	139	
	1439	N611	Subnet mask 2	0 to 255	1	255	139	
	1440	N612	Subnet mask 3	0 to 255	1	255	139	
	1441	N613	Subnet mask 4	0 to 255	1	0	139	
	1442	N660	Ethernet IP filter address 1	0 to 255	1	0	139	
	1443	N661	Ethernet IP filter address 2	0 to 255	1	0	139	
	1444	N662	Ethernet IP filter address 3	0 to 255	1	0	139	
	1445	N663	Ethernet IP filter address 4	0 to 255	1	0	139	
	1446	N664	Ethernet IP filter address 2 range specification	0 to 255, 9999	1	9999	139	
	1447	N665	Ethernet IP filter address 3 range specification	0 to 255, 9999	1	9999	139	
	1448	N666	Ethernet IP filter address 4 range specification	0 to 255, 9999	1	9999	139	

Function	Pr.	Pr. group	Name	Setting range	Minimum setting increments	Initial value	Refer to page	Customer setting
Ethernet communication	1449	N670	Ethernet command source selection IP address 1	0 to 255	1	0	139	
	1450	N671	Ethernet command source selection IP address 2	0 to 255	1	0	139	
	1451	N672	Ethernet command source selection IP address 3	0 to 255	1	0	139	
	1452	N673	Ethernet command source selection IP address 4	0 to 255	1	0	139	
	1453	N674	Ethernet command source selection IP address 3 range specification	0 to 255, 9999	1	9999	139	
	1454	N675	Ethernet command source selection IP address 4 range specification	0 to 255, 9999	1	9999	139	
	1455	N642	Keepalive time	1 to 7200 s	1 s	3600 s	139	

*1 Setting values not mentioned above are the same as those of the standard inverters.
*2 The initial value is for the standard models and the IP55 compatible models.
*3 The initial value is for the separated converter types.

● List of parameters for the FR-A842-P parallel operation (by parameter number)

The following table shows the extended parameters for the FR-A842-P as compared to the standard inverters.

Function	Pr.	Pr. group	Name	Setting range	Minimum setting increments	Initial value	Refer to page	Customer setting
Output terminal function assignment	190	M400	RUN terminal function selection	227, 327 *1	1	0	147	
	191	M401	SU terminal function selection		1	1	147	
	192	M402	IPF terminal function selection		1	9999	147	
	193	M403	OL terminal function selection		1	3	147	
	194	M404	FU terminal function selection		1	4	147	
	195	M405	ABC1 terminal function selection		1	99	147	
	196	M406	ABC2 terminal function selection		1	9999	147	
Parallel operation function	652	N092	Parallel operation communication check time	0, 0.1 to 120 s	0.1 s	1 s	163	
	1001	E390	Parallel operation selection	1, 2, 100, 200, 300	1	100	173	

*1 Setting values not mentioned above are the same as those of the standard inverters.

● List of parameters for the FR-A800-GN CC-Link IE TSN communication (by parameter number)

The following table shows the extended parameters for the FR-A800-GN as compared to the standard inverters.

Function	Pr.	Pr. group	Name	Setting range	Minimum setting increments	Initial value	Refer to page	Customer setting
CC-Link IE TSN	434	N700	IP address 1	0 to 255	1	0(192*1)	139	
	435	N701	IP address 2	0 to 255	1	0(168*1)	139	
	436	N702	IP address 3	0 to 255	1	0(50*1)	139	
	437	N703	IP address 4	0 to 255	1	0(2*1)	139	
	438	N710	Sub-network mask 1	0 to 255	1	0(255*1)	139	
	439	N711	Sub-network mask 2	0 to 255	1	0(255*1)	139	
	440	N712	Sub-network mask 3	0 to 255	1	0(255*1)	139	
	441	N713	Sub-network mask 4	0 to 255	1	0	139	
	1442	N760	Ethernet IP filter address 1	0 to 255	1	0	139	
	1443	N761	Ethernet IP filter address 2	0 to 255	1	0	139	
	1444	N762	Ethernet IP filter address 3	0 to 255	1	0	139	
	1445	N763	Ethernet IP filter address 4	0 to 255	1	0	139	
	1446	N764	Ethernet IP filter address 2 range specification	0 to 255, 9999	1	9999	139	
	1447	N765	Ethernet IP filter address 3 range specification	0 to 255, 9999	1	9999	139	
	1448	N766	Ethernet IP filter address 4 range specification	0 to 255, 9999	1	9999	139	
	1459	N746	Clock source selection	0 to 2	1	0	139	

*1 The initial value after all parameters have been cleared.

● Inverter parameter list (by function group)

◆ E: Environment setting parameters

Parameters that set the inverter operation characteristics.

Pr. group	Pr.	Name	Refer to page
E000	168	Parameter for manufacturer setting. Do not set.	
E001	169	Parameter for manufacturer setting. Do not set.	
E020	1006	Clock (year)	173
E021	1007	Clock (month, day)	173
E022	1008	Clock (hour, minute)	173
E023	269	Parameter for manufacturer setting. Do not set.	
E080	168	Parameter for manufacturer setting. Do not set.	
E081	169	Parameter for manufacturer setting. Do not set.	
E100	75	Reset selection	133
E101	75	Disconnected PU detection	133
E102	75	PU stop selection	133
E103	145	PU display language selection	144
E104	990	PU buzzer control	172
E105	991	PU contrast adjustment	172
E106	1048	Display-off waiting time	174
E107	75	Reset limit	133
E108	1000	Direct setting selection	172
E110	1049	USB host reset	174
E200	161	Frequency setting/key lock operation selection	145
E201	295	Frequency change increment amount setting	145
E300	30	Regenerative function selection	123
E301	570	Multiple rating setting	162
E302	977	Input voltage mode selection	171
E400	77	Parameter write selection	134
E410	296	Password lock level	155
E411	297	Password lock/unlock	155
E415	1499	Parameter for manufacturer setting. Do not set.	
E420	888	Free parameter 1	170
E421	889	Free parameter 2	170
E430	998 *7	PM parameter initialization Simple	241
E431	999	Automatic parameter setting Simple	172
E440	160	User group read selection Simple	145
E441	172	User group registered display/batch clear	145
E442	173	User group registration	145
E443	174	User group clear	145
E490	989	Parameter copy alarm release	171
E600	72 *7	PWM frequency selection	131
E601	240	Soft-PWM operation selection	131
E602	260 *7	PWM frequency automatic switchover	131
E700	255	Life alarm status display	149
E701	256 *4	Inrush current limit circuit life display	149
E702	257	Control circuit capacitor life display	149
E703	258 *4	Main circuit capacitor life display	149
E704	259 *4	Main circuit capacitor life measuring	149
E705	506	Display estimated main circuit capacitor residual life	149
E710	503	Maintenance timer 1	161
E711	504	Maintenance timer 1 warning output set time	161
E712	686	Maintenance timer 2	161
E713	687	Maintenance timer 2 warning output set time	161
E714	688	Maintenance timer 3	161
E715	689	Maintenance timer 3 warning output set time	161
E720	555	Current average time	161
E721	556	Data output mask time	161
E722	557	Current average value monitor signal output reference current	161

◆ F: Setting of acceleration/deceleration time and acceleration/deceleration pattern

Parameters that set the motor acceleration/deceleration characteristics.

Pr. group	Pr.	Name	Refer to page
F000	20	Acceleration/deceleration reference frequency	118
F001	21	Acceleration/deceleration time increments	118
F002	16	Jog acceleration/deceleration time	120
F003	611	Acceleration time at a restart	128
F010	7	Acceleration time Simple	118
F011	8	Deceleration time Simple	118
F020	44	Second acceleration/deceleration time	118
F021	45	Second deceleration time	118
F022	147	Acceleration/deceleration time switching frequency	118
F030	110	Third acceleration/deceleration time	118
F031	111	Third deceleration time	118
F040	1103	Deceleration time at emergency stop	174
F070	791 *7	Acceleration time in low-speed range	118
F071	792 *7	Deceleration time in low-speed range	118
F100	29	Acceleration/deceleration pattern selection	122
F101	59	Remote function selection	129
F102	13	Starting frequency	120
F103	571	Holding time at a start	120
F200	140	Backlash acceleration stopping frequency	122
F201	141	Backlash acceleration stopping time	122
F202	142	Backlash deceleration stopping frequency	122
F203	143	Backlash deceleration stopping time	122
F300	380	Acceleration S-pattern 1	122
F301	381	Deceleration S-pattern 1	122
F302	382	Acceleration S-pattern 2	122
F303	383	Deceleration S-pattern 2	122
F400	516	S-pattern time at a start of acceleration	122
F401	517	S-pattern time at a completion of acceleration	122
F402	518	S-pattern time at a start of deceleration	122
F403	519	S-pattern time at a completion of deceleration	122
F500	292	Automatic acceleration/deceleration	130
F510	61	Reference current	130
F511	62	Reference value at acceleration	130
F512	63	Reference value at deceleration	130
F513	293	Acceleration/deceleration separate selection	130
F520	64	Starting frequency for elevator mode	130

◆ D: Operation command and frequency command

Parameters that specify the inverter's command source, and parameters that set the motor driving frequency and torque.

Pr. group	Pr.	Name	Refer to page
D000	79	Operation mode selection Simple	134
D001	340	Communication startup mode selection	134
D010	338	Communication operation command source	155
D011	339	Communication speed command source	155
D012	550 *7	NET mode operation command source selection	155
D013	551	PU mode operation command source selection	155
D020	78	Reverse rotation prevention selection	134
D030	811	Set resolution switchover	122, 124
D100	291	Pulse train I/O selection	154
D101	384	Input pulse division scaling factor	154
D110	385	Frequency for zero input pulse	154
D111	386	Frequency for maximum input pulse	154
D120	432 *1	Pulse train torque command bias	166
D121	433 *1	Pulse train torque command gain	166
D200	15	Jog frequency	120
D300	28	Multi-speed input compensation selection	118
D301	4	Multi-speed setting (high speed) Simple	118
D302	5	Multi-speed setting (middle speed) Simple	118
D303	6	Multi-speed setting (low speed) Simple	118
D304 to D307	24 to 27	Multi-speed setting (4 speed to 7 speed)	118
D308 to D315	232 to 239	Multi-speed setting (8 speed to 15 speed)	118
D400	804	Torque command source selection	122, 166
D401	805	Torque command value (RAM)	122, 166
D402	806	Torque command value (RAM, EEPROM)	122, 166
D403	1114	Torque command reverse selection	166

◆ H: Protective function parameter

Parameters to protect the motor and the inverter.

Pr. group	Pr.	Name	Refer to page
H000	9	Electronic thermal O/L relay Simple	119
H001	600	First free thermal reduction frequency 1	119
H002	601	First free thermal reduction ratio 1	119
H003	602	First free thermal reduction frequency 2	119
H004	603	First free thermal reduction ratio 2	119
H005	604	First free thermal reduction frequency 3	119
H006	607	Motor permissible load level	119
H010	51	Second electronic thermal O/L relay	119
H011	692	Second free thermal reduction frequency 1	119
H012	693	Second free thermal reduction ratio 1	119
H013	694	Second free thermal reduction frequency 2	119
H014	695	Second free thermal reduction ratio 2	119
H015	696	Second free thermal reduction frequency 3	119
H016	608	Second motor permissible load level	119
H020	561	PTC thermistor protection level	119
H021	1016	PTC thermistor protection detection time	119
H022	876 *1	Thermal protector input	119
H030	875	Fault definition	169
H100	244	Cooling fan operation selection	148
H101	249	Earth (ground) fault detection at start	148
H102	598	Undervoltage level	162
H103	997	Fault initiation	172
H200	251	Output phase loss protection selection	149
H201	872 *4	Input phase loss protection selection	149
H300	65 *7	Retry selection	130
H301	67 *7	Number of retries at fault occurrence	130
H302	68 *7	Retry waiting time	130
H303	69 *7	Retry count display erase	130
H400	1	Maximum frequency Simple	117
H401	2	Minimum frequency Simple	117
H402	18	High speed maximum frequency	117
H410	807	Speed limit selection	166
H411	808	Forward rotation speed limit/speed limit	166
H412	809	Reverse rotation speed limit/reverse-side speed limit	166
H414	1113	Speed limit method selection	166
H415	873 *1	Speed limit	153
H416	285	Speed deviation excess detection frequency	152, 153
H417	853 *1	Speed deviation time	153
H420	31	Frequency jump 1A	124
H421	32	Frequency jump 1B	124
H422	33	Frequency jump 2A	124
H423	34	Frequency jump 2B	124
H424	35	Frequency jump 3A	124
H425	36	Frequency jump 3B	124
H429	552	Frequency jump range	124
H500	22	Stall prevention operation level (Torque limit level)	121
H501	156	Stall prevention operation selection	121
H520	1480 *8	Load characteristics measurement mode	176
H521	1481 *8	Load characteristics load reference 1	176
H522	1482 *8	Load characteristics load reference 2	176
H523	1483 *8	Load characteristics load reference 3	176
H524	1484 *8	Load characteristics load reference 4	176
H525	1485 *8	Load characteristics load reference 5	176
H526	1486 *8	Load characteristics maximum frequency	176
H527	1487 *8	Load characteristics minimum frequency	176
H531	1488 *8	Upper limit warning detection width	176
H532	1489 *8	Lower limit warning detection width	176
H533	1490 *8	Upper limit fault detection width	176
H534	1491 *8	Lower limit fault detection width	176

Pr. group	Pr.	Name	Refer to page
H535	1492 *8	Load status detection signal delay time / load reference measurement waiting time	176
H600	48	Second stall prevention operation level	121
H601	49	Second stall prevention operation frequency	121
H602	114	Third stall prevention operation level	121
H603	115	Third stall prevention operation frequency	121
H610	23	Stall prevention operation level compensation factor at double speed	121
H611	66	Stall prevention operation reduction starting frequency	121
H620	148	Stall prevention level at 0 V input	121
H621	149	Stall prevention level at 10 V input	121
H631	154	Voltage reduction selection during stall prevention operation	121
H700	810	Torque limit input method selection	122
H701	812	Torque limit level (regeneration)	122
H702	813	Torque limit level (3rd quadrant)	122
H703	814	Torque limit level (4th quadrant)	122
H704	801	Output limit level	122
H710	815	Torque limit level 2	122
H720	816	Torque limit level during acceleration	122
H721	817	Torque limit level during deceleration	122
H730	874	OLT level setting	122
H800	374	Overspeed detection level	156
H881	690	Deceleration check time	164

◆ M: Monitor display and monitor output signal

Parameters regarding the inverter's operating status. These parameters are used to set the monitors and output signals.

Pr. group	Pr.	Name	Refer to page
M000	37	Speed display	124
M001	505	Speed setting reference	124
M002	144	Speed setting switchover	124
M020	170	Watt-hour meter clear	125
M021	563	Energization time carrying-over times	125
M022	268	Monitor decimal digits selection	125
M023	891	Cumulative power monitor digit shifted times	125, 170
M030	171	Operation hour meter clear	125
M031	564	Operating time carrying-over times	125
M040	55	Frequency monitoring reference	127
M041	56	Current monitoring reference	127
M042	866	Torque monitoring reference	127
M043	241	Analog input display unit switchover	142
M044	290	Monitor negative output selection	125
M045	1018	Monitor with sign selection	125
M050	1106	Torque monitor filter	125
M051	1107	Running speed monitor filter	125
M052	1108	Excitation current monitor filter	125
M060	663	Control circuit temperature signal output level	164
M100	52	Operation panel main monitor selection	125
M101	774	Operation panel monitor selection 1	125
M102	775	Operation panel monitor selection 2	125
M103	776	Operation panel monitor selection 3	125
M104	992	Operation panel setting dial push monitor selection	125
M200	892	Load factor	170
M201	893	Energy saving monitor reference (motor capacity)	170

Pr. group	Pr.	Name	Refer to page
M202	894	Control selection during commercial power-supply operation	170
M203	895	Power saving rate reference value	170
M204	896	Power unit cost	170
M205	897	Power saving monitor average time	170
M206	898	Power saving cumulative monitor clear	170
M207	899	Operation time rate (estimated value)	170
M300	54	FM/CA terminal function selection	125
M301	158	AM terminal function selection	125
M310	C0 (900) *2	FM/CA terminal calibration	171
M320	C1 (901) *2	AM terminal calibration	171
M321	867	AM output filter	171
M330	C8 (930) *2	Current output bias signal	171
M331	C9 (930) *2	Current output bias current	171
M332	C10 (931) *2	Current output gain signal	171
M333	C11 (931) *2	Current output gain current	171
M334	869	Current output filter	171
M400	190	RUN terminal function selection	147
M401	191	SU terminal function selection	147
M402	192	IPF terminal function selection	147
M403	193	OL terminal function selection	147
M404	194	FU terminal function selection	147
M405	195	ABC1 terminal function selection	147
M406	196	ABC2 terminal function selection	147
M410	313 *9	DO0 output selection	147
M411	314 *9	DO1 output selection	147
M412	315 *9	DO2 output selection	147
M430	157	OL signal output timer	121
M431	289	Inverter output terminal filter	147
M433	166	Output current detection signal retention time	144
M440	870	Speed detection hysteresis	125
M441	41	Up-to-frequency sensitivity	125
M442	42	Output frequency detection	125
M443	43	Output frequency detection for reverse rotation	125
M444	50	Second output frequency detection	125
M445	116	Third output frequency detection	125
M446	865	Low speed detection	125
M460	150	Output current detection level	144
M461	151	Output current detection signal delay time	144
M462	152	Zero current detection level	144
M463	153	Zero current detection time	144
M464	167	Output current detection operation selection	144
M470	864	Torque detection	169
M500	495	Remote output selection	160
M501	496	Remote output data 1	160
M502	497	Remote output data 2	160
M510	76	Fault code output selection	133

Pr. group	Pr.	Name	Refer to page
M520	799	Pulse increment setting for output power	165
M530	655	Analog remote output selection	163
M531	656	Analog remote output 1	163
M532	657	Analog remote output 2	163
M533	658	Analog remote output 3	163
M534	659	Analog remote output 4	163
M600	863 *1	Control terminal option-Encoder pulse division ratio	169
M601	413 *1	Encoder pulse division ratio	169
M610	635 *1	Cumulative pulse clear signal selection	159
M611	636 *1	Cumulative pulse division scaling factor	159
M612	637 *1	Control terminal option-Cumulative pulse division scaling factor	159
M613	638 *1	Cumulative pulse storage	159

◆ T: Multi-function input terminal parameters

Parameters for the input terminals where inverter commands are received through.

Pr. group	Pr.	Name	Refer to page
T000	73	Analog input selection	132
T001	267	Terminal 4 input selection	132
T002	74	Input filter time constant	132
T003	822	Speed setting filter 1	132
T004	826	Torque setting filter 1	132
T005	832	Speed setting filter 2	132
T006	836	Torque setting filter 2	132
T007	849	Analog input offset adjustment	132
T010	868	Terminal 1 function assignment	169
T021	242	Terminal 1 added compensation amount (terminal 2)	132
T022	125	Terminal 2 frequency setting gain frequency Simple	142
T040	858	Terminal 4 function assignment	169
T041	243	Terminal 1 added compensation amount (terminal 4)	132
T042	126	Terminal 4 frequency setting gain frequency Simple	142
T050	252	Override bias	132
T051	253	Override gain	132
T052	573	4 mA input check selection	162
T053	777	4 mA input check operation frequency	162
T054	778	4 mA input check filter	162
T100	C12 (917) *2	Terminal 1 bias frequency (speed)	142
T101	C13 (917) *2	Terminal 1 bias (speed)	142
T102	C14 (918) *2	Terminal 1 gain frequency (speed)	142
T103	C15 (918) *2	Terminal 1 gain (speed)	142
T110	C16 (919) *2	Terminal 1 bias command (torque/ magnetic flux)	142
T111	C17 (919) *2	Terminal 1 bias (torque/magnetic flux)	142

Pr. group	Pr.	Name	Refer to page
T112	C18 (920) *2	Terminal 1 gain command (torque/ magnetic flux)	142
T113	C19 (920) *2	Terminal 1 gain (torque/magnetic flux)	142
T200	C2 (902) *2	Terminal 2 frequency setting bias frequency	142
T201	C3 (902) *2	Terminal 2 frequency setting bias	142
T202	125 (903) *2	Terminal 2 frequency setting gain frequency	142
T203	C4 (903) *2	Terminal 2 frequency setting gain	142
T400	C5 (904) *2	Terminal 4 frequency setting bias frequency	142
T401	C6 (904) *2	Terminal 4 frequency setting bias	142
T402	126 (905) *2	Terminal 4 frequency setting gain frequency	142
T403	C7 (905) *2	Terminal 4 frequency setting gain	142
T410	C38 (932) *2	Terminal 4 bias command (torque/ magnetic flux)	142
T411	C39 (932) *2	Terminal 4 bias (torque/magnetic flux)	142
T412	C40 (933) *2	Terminal 4 gain command (torque/ magnetic flux)	142
T413	C41 (933) *2	Terminal 4 gain (torque/magnetic flux)	142
T700	178	STF terminal function selection	146
T701	179	STR terminal function selection	146
T702	180	RL terminal function selection	146
T703	181	RM terminal function selection	146
T704	182	RH terminal function selection	146
T705	183	RT terminal function selection	146
T706	184	AU terminal function selection	146
T707	185	JOG terminal function selection	146
T708	186	CS terminal function selection	146
T709	187	MRS terminal function selection	146
T710	188	STOP terminal function selection	146
T711	189	RES terminal function selection	146
T720	17	MRS input selection	121
T721	599	X10 terminal input selection	123
T722	606	Power failure stop external signal input selection	150
T730	155	RT signal function validity condition selection	145
T740	699	Input terminal filter	146

◆ C: Motor constant parameters

Parameters for the applied motor setting.

Pr. group	Pr.	Name	Refer to page
C000	684	Tuning data unit switchover	136
C100	71	Applied motor	131
C101	80	Motor capacity	135
C102	81	Number of motor poles	135
C103	9	Rated motor current Simple	119
C104	83	Rated motor voltage	136
C105	84	Rated motor frequency	136
C106	702 *7	Maximum motor frequency	136
C107	707	Motor inertia (integer)	136
C108	724	Motor inertia (exponent)	136
C110	96	Auto tuning setting/status	136
C111	95	Online auto tuning selection	138
C112	818	Easy gain tuning response level setting	167
C113	819	Easy gain tuning selection	167
C114	880	Load inertia ratio	168
C120	90	Motor constant (R1)	136
C121	91	Motor constant (R2)	136
C122	92	Motor constant (L1)/d-axis inductance (Ld)	136
C123	93	Motor constant (L2)/q-axis inductance (Lq)	136
C124	94	Motor constant (X)	136
C125	82	Motor excitation current	136
C126	859	Torque current/Rated PM motor current	136
C130	706 *7	Induced voltage constant (phi f)	136
C131	711 *7	Motor Ld decay ratio	136
C132	712 *7	Motor Lq decay ratio	136
C133	725 *7	Motor protection current level	136
C135	1412 *7	Motor induced voltage constant (phi f) exponent	136
C140	369 *1	Number of encoder pulses	156
C141	359 *1	Encoder rotation direction	156
C148	376 *1	Encoder signal loss detection enable/ disable selection	157
C150	1002 *7	Lq tuning target current adjustment coefficient	136
C182	717 *7	Starting resistance tuning compensation	136
C185	721 *7	Starting magnetic pole position detection pulse width	136
C200	450	Second applied motor	131
C201	453	Second motor capacity	135
C202	454	Number of second motor poles	135
C203	51	Rated second motor current	119
C204	456	Rated second motor voltage	136
C205	457	Rated second motor frequency	136
C206	743 *7	Second motor maximum frequency	136
C207	744	Second motor inertia (integer)	136
C208	745	Second motor inertia (exponent)	136
C210	463	Second motor auto tuning setting/ status	136
C211	574	Second motor online auto tuning	138
C220	458	Second motor constant (R1)	136
C221	459	Second motor constant (R2)	136
C222	460	Second motor constant (L1) / d-axis inductance (Ld)	136
C223	461	Second motor constant (L2) / q-axis inductance (Lq)	136
C224	462	Second motor constant (X)	136
C225	455	Second motor excitation current	136
C226	860	Second motor torque current/Rated PM motor current	136
C230	738 *7	Second motor induced voltage constant (phi f)	136
C231	739 *7	Second motor Ld decay ratio	136
C232	740 *7	Second motor Lq decay ratio	136
C233	746 *7	Second motor protection current level	136
C235	1413 *7	Second motor induced voltage constant (phi f) exponent	136
C240	851 *1	Control terminal option-Number of encoder pulses	156
C241	852 *1	Control terminal option-Encoder rotation direction	156
C242	862 *1	Encoder option selection	156
C248	855 *1	Control terminal option-Signal loss detection enable/disable selection	156
C282	741 *7	Second starting resistance tuning compensation	136
C285	742 *7	Second motor magnetic pole detection pulse width	136

◆ A: Application parameters

Parameters to set a specific application.

Pr. group	Pr.	Name	Refer to page
A000	135	Electronic bypass sequence selection	144
A001	136	MC switchover interlock time	144
A002	137	Start waiting time	144
A003	138	Bypass selection at a fault	144
A004	139	Automatic switchover frequency from inverter to bypass operation	144
A005	159	Automatic switchover frequency range from bypass to inverter operation	144
A006	248	Self power management selection	148
A007	254	Main circuit power OFF waiting time	148
A100	278	Brake opening frequency	152
A101	279	Brake opening current	152
A102	280	Brake opening current detection time	152
A103	281	Brake operation time at start	152
A104	282	Brake operation frequency	152
A105	283	Brake operation time at stop	152
A106	284	Deceleration detection function selection	152
A107	285	Overspeed detection frequency	152, 153
A108	639	Brake opening current selection	152
A109	640	Brake operation frequency selection	152
A110	292	Automatic acceleration/deceleration	130
A120	642	Second brake opening frequency	152
A121	643	Second brake opening current	152
A122	644	Second brake opening current detection time	152
A123	645	Second brake operation time at start	152
A124	646	Second brake operation frequency	152
A125	647	Second brake operation time at stop	152
A126	648	Second deceleration detection function selection	152
A128	650	Second brake opening current selection	152
A129	651	Second brake operation frequency selection	152
A130	641	Second brake sequence operation selection	152
A170	1410	Starting times lower 4 digits	175
A171	1411	Starting times upper 4 digits	175
A200	270	Stop-on contact/load torque high-speed frequency control selection	151
A201	271	High-speed setting maximum current	151
A202	272	Middle-speed setting minimum current	151
A203	273	Current averaging range	151
A204	274	Current averaging filter time constant	151

Pr. group	Pr.	Name	Refer to page
A205	275	Stop-on contact excitation current low-speed multiplying factor	151
A206	276 *7	PWM carrier frequency at stop-on contact	151
A300	592	Traverse function selection	162
A301	593	Maximum amplitude amount	162
A302	594	Amplitude compensation amount during deceleration	162
A303	595	Amplitude compensation amount during acceleration	162
A304	596	Amplitude acceleration time	162
A305	597	Amplitude deceleration time	162
A310	1072	DC brake judgment time for anti-sway control operation	174
A311	1073	Anti-sway control operation selection	174
A312	1074	Anti-sway control frequency	174
A313	1075	Anti-sway control depth	174
A314	1076	Anti-sway control width	174
A315	1077	Rope length	174
A316	1078	Trolley weight	174
A317	1079	Load weight	174
A510	350 *1	Stop position command selection	156
A511	360 *1	16-bit data selection	156
A512	361 *1	Position shift	156
A520	362 *1	Orientation position loop gain	156
A521	363 *1	Completion signal output delay time	156
A522	364 *1	Encoder stop check time	156
A523	365 *1	Orientation limit	156
A524	366 *1	Recheck time	156
A525	393 *1	Orientation selection	156
A526	351 *1	Orientation speed	156
A527	352 *1	Creep speed	156
A528	353 *1	Creep switchover position	156
A529	354 *1	Position loop switchover position	156
A530	355 *1	DC injection brake start position	156
A531	356 *1	Internal stop position command	156
A532	357 *1	Orientation in-position zone	156
A533	358 *1	Servo torque selection	156
A540	394 *1	Number of machine side gear teeth	156
A541	395 *1	Number of motor side gear teeth	156
A542	396 *1	Orientation speed gain (P term)	156
A543	397 *1	Orientation speed integral time	156
A544	398 *1	Orientation speed gain (D term)	156
A545	399 *1	Orientation deceleration ratio	156
A546	829 *1	Number of machine end encoder pulses	156
A600	759	PID unit selection	143
A601	131	PID upper limit	143
A602	132	PID lower limit	143
A603	553	PID deviation limit	143
A604	554	PID signal operation selection	143
A605	1134	PID upper limit manipulated value	143
A606	1135	PID lower limit manipulated value	143
A607	1015	Integral stop selection at limited frequency	143
A610	128	PID action selection	143
A611	133	PID action set point	143
A612	127	PID control automatic switchover frequency	143
A613	129	PID proportional band	143
A614	130	PID integral time	143
A615	134	PID differential time	143
A616	760	Pre-charge fault selection	165
A617	761	Pre-charge ending level	165

Pr. group	Pr.	Name	Refer to page
A618	762	Pre-charge ending time	165
A619	763	Pre-charge upper detection level	165
A620	764	Pre-charge time limit	165
A621	575	Output interruption detection time	143
A622	576	Output interruption detection level	143
A623	577	Output interruption cancel level	143
A624	609	PID set point/deviation input selection	143
A625	610	PID measured value input selection	143
A630	C42 (934) *2	PID display bias coefficient	143
A631	C43 (934) *2	PID display bias analog value	143
A632	C44 (935) *2	PID display gain coefficient	143
A633	C45 (935) *2	PID display gain analog value	143
A640	1142	Second PID unit selection	143
A641	1143	Second PID upper limit	143
A642	1144	Second PID lower limit	143
A643	1145	Second PID deviation limit	143
A644	1146	Second PID signal operation selection	143
A650	753	Second PID action selection	143
A651	755	Second PID action set point	143
A652	754	Second PID control automatic switchover frequency	143
A653	756	Second PID proportional band	143
A654	757	Second PID integral time	143
A655	758	Second PID differential time	143
A656	765	Second pre-charge fault selection	165
A657	766	Second pre-charge ending level	165
A658	767	Second pre-charge ending time	165
A659	768	Second pre-charge upper detection level	165
A660	769	Second pre-charge time limit	165
A661	1147	Second output interruption detection time	143
A662	1148	Second output interruption detection level	143
A663	1149	Second output interruption cancel level	143
A664	1140	Second PID set point/deviation input selection	143
A665	1141	Second PID measured value input selection	143
A670	1136	Second PID display bias coefficient	143
A671	1137	Second PID display bias analog value	143
A672	1138	Second PID display gain coefficient	143
A673	1139	Second PID display gain analog value	143
A680	573	4 mA input check selection	162
A681	777	4 mA input check operation frequency	162
A682	778	4 mA input check filter	162
A700	162	Automatic restart after instantaneous power failure selection	128
A701	299	Rotation direction detection selection at restarting	128
A702	57	Restart coasting time	128
A703	58	Restart cushion time	128
A704	163	First cushion time for restart	128
A705	164	First cushion voltage for restart	128

Pr. group	Pr.	Name	Refer to page
A710	165	Stall prevention operation level for restart	128
A711	298	Frequency search gain	136
A712	560	Second frequency search gain	136
A730	261	Power failure stop selection	150
A731	262	Subtracted frequency at deceleration start	150
A732	263	Subtraction starting frequency	150
A733	264	Power-failure deceleration time 1	150
A734	265	Power-failure deceleration time 2	150
A735	266	Power failure deceleration time switchover frequency	150
A785	294	UV avoidance voltage gain	150
A786	668	Power failure stop frequency gain	150
A800	414	PLC function operation selection	157
A801	415	Inverter operation lock mode setting	157
A802	416	Pre-scale function selection	157
A803	417	Pre-scale setting value	157
A804	498	PLC function flash memory clear	157
A805	675	User parameter auto storage function selection	157
A810 to A859	1150 to 1199	PLC function user parameters 1 to 50	157
A900	1020	Trace operation selection	174
A901	1021	Trace mode selection	174
A902	1022	Sampling cycle	174
A903	1023	Number of analog channels	174
A904	1024	Sampling auto start	174
A905	1025	Trigger mode selection	174
A906	1026	Number of sampling before trigger	174
A910	1027	Analog source selection (1ch)	174
A911	1028	Analog source selection (2ch)	174
A912	1029	Analog source selection (3ch)	174
A913	1030	Analog source selection (4ch)	174
A914	1031	Analog source selection (5ch)	174
A915	1032	Analog source selection (6ch)	174
A916	1033	Analog source selection (7ch)	174
A917	1034	Analog source selection (8ch)	174
A918	1035	Analog trigger channel	174
A919	1036	Analog trigger operation selection	174
A920	1037	Analog trigger level	174
A930	1038	Digital source selection (1ch)	174
A931	1039	Digital source selection (2ch)	174
A932	1040	Digital source selection (3ch)	174
A933	1041	Digital source selection (4ch)	174
A934	1042	Digital source selection (5ch)	174
A935	1043	Digital source selection (6ch)	174
A936	1044	Digital source selection (7ch)	174
A937	1045	Digital source selection (8ch)	174
A938	1046	Digital trigger channel	174
A939	1047	Digital trigger operation selection	174

◆ B: Position control parameters

Parameters for the position control setting.

Pr. group	Pr.	Name	Refer to page
B000	419	Position command source selection	158, 159
B001	420	Command pulse scaling factor numerator (electronic gear numerator)	160
B002	421	Command pulse multiplication denominator (electronic gear denominator)	160
B003	422	Position control gain	160
B004	423	Position feed forward gain	160
B005	424	Position command acceleration/ deceleration time constant	160
B006	425	Position feed forward command filter	160
B007	426	In-position width	160
B008	427	Excessive level error	160
B009	428	Command pulse selection	159
B010	429	Clear signal selection	159
B011	430	Pulse monitor selection	159
B012	446	Model position control gain	159
B013	1298	Second position control gain	160
B020	464	Digital position control sudden stop deceleration time	158
B021	465	First target position lower 4 digits	158
B022	466	First target position upper 4 digits	158
B023	467	Second target position lower 4 digits	158
B024	468	Second target position upper 4 digits	158
B025	469	Third target position lower 4 digits	158
B026	470	Third target position upper 4 digits	158
B027	471	Fourth target position lower 4 digits	158
B028	472	Fourth target position upper 4 digits	158
B029	473	Fifth target position lower 4 digits	158
B030	474	Fifth target position upper 4 digits	158
B031	475	Sixth target position lower 4 digits	158
B032	476	Sixth target position upper 4 digits	158
B033	477	Seventh target position lower 4 digits	158
B034	478	Seventh target position upper 4 digits	158
B035	479	Eighth target position lower 4 digits	158
B036	480	Eighth target position upper 4 digits	158
B037	481	Ninth target position lower 4 digits	158
B038	482	Ninth target position upper 4 digits	158
B039	483	Tenth target position lower 4 digits	158
B040	484	Tenth target position upper 4 digits	158
B041	485	Eleventh target position lower 4 digits	158
B042	486	Eleventh target position upper 4 digits	158
B043	487	Twelfth target position lower 4 digits	158
B044	488	Twelfth target position upper 4 digits	158
B045	489	Thirteenth target position lower 4 digits	158
B046	490	Thirteenth target position upper 4 digits	158
B047	491	Fourteenth target position lower 4 digits	158
B048	492	Fourteenth target position upper 4 digits	158
B049	493	Fifteenth target position lower 4 digits	158
B050	494	Fifteenth target position upper 4 digits	158
B100	1220	Parameter for manufacturer setting.	
B101	1221	Start command edge detection selection	158
B120	1222	First positioning acceleration time	158
B121	1223	First positioning deceleration time	158
B122	1224	First positioning dwell time	158
B123	1225	First positioning sub-function	158
B124	1226	Second positioning acceleration time	158

Pr. group	Pr.	Name	Refer to page
B125	1227	Second positioning deceleration time	158
B126	1228	Second positioning dwell time	158
B127	1229	Second positioning sub-function	158
B128	1230	Third positioning acceleration time	158
B129	1231	Third positioning deceleration time	158
B130	1232	Third positioning dwell time	158
B131	1233	Third positioning sub-function	158
B132	1234	Fourth positioning acceleration time	158
B133	1235	Fourth positioning deceleration time	158
B134	1236	Fourth positioning dwell time	158
B135	1237	Fourth positioning sub-function	158
B136	1238	Fifth positioning acceleration time	158
B137	1239	Fifth positioning deceleration time	158
B138	1240	Fifth positioning dwell time	158
B139	1241	Fifth positioning sub-function	158
B140	1242	Sixth positioning acceleration time	158
B141	1243	Sixth positioning deceleration time	158
B142	1244	Sixth positioning dwell time	158
B143	1245	Sixth positioning sub-function	158
B144	1246	Seventh positioning acceleration time	158
B145	1247	Seventh positioning deceleration time	158
B146	1248	Seventh positioning dwell time	158
B147	1249	Seventh positioning sub-function	158
B148	1250	Eighth positioning acceleration time	158
B149	1251	Eighth positioning deceleration time	158
B150	1252	Eighth positioning dwell time	158
B151	1253	Eighth positioning sub-function	158
B152	1254	Ninth positioning acceleration time	158
B153	1255	Ninth positioning deceleration time	158
B154	1256	Ninth positioning dwell time	158
B155	1257	Ninth positioning sub-function	158
B156	1258	Tenth positioning acceleration time	158
B157	1259	Tenth positioning deceleration time	158
B158	1260	Tenth positioning dwell time	158
B159	1261	Tenth positioning sub-function	158
B160	1262	Eleventh positioning acceleration time	158
B161	1263	Eleventh positioning deceleration time	158
B162	1264	Eleventh positioning dwell time	158
B163	1265	Eleventh positioning sub-function	158
B164	1266	Twelfth positioning acceleration time	158
B165	1267	Twelfth positioning deceleration time	158
B166	1268	Twelfth positioning dwell time	158
B167	1269	Twelfth positioning sub-function	158
B168	1270	Thirteenth positioning acceleration time	158
B169	1271	Thirteenth positioning deceleration time	158
B170	1272	Thirteenth positioning dwell time	158
B171	1273	Thirteenth positioning sub-function	158
B172	1274	Fourteenth positioning acceleration time	158
B173	1275	Fourteenth positioning deceleration time	158

Pr. group	Pr.	Name	Refer to page
B174	1276	Fourteenth positioning dwell time	158
B175	1277	Fourteenth positioning sub-function	158
B176	1278	Fifteenth positioning acceleration time	158
B177	1279	Fifteenth positioning deceleration time	158
B178	1280	Fifteenth positioning dwell time	158
B179	1281	Fifteenth positioning sub-function	158
B180	1282	Home position return method selection	158
B181	1283	Home position return speed	158
B182	1284	Home position return creep speed	158
B183	1285	Home position shift amount lower 4 digits	158
B184	1286	Home position shift amount upper 4 digits	158
B185	1287	Travel distance after proximity dog ON lower 4 digits	158
B186	1288	Travel distance after proximity dog ON upper 4 digits	158
B187	1289	Home position return stopper torque	158
B188	1290	Home position return stopper waiting time	158
B190	1292	Position control terminal input selection	158
B191	1293	Roll feeding mode selection	158
B192	1294	Position detection lower 4 digits	160
B193	1295	Position detection upper 4 digits	160
B194	1296	Position detection selection	160
B195	1297	Position detection hysteresis width	160

◆ N: Operation via communication and its settings

Parameters for communication operation. These parameters set the communication specifications and operation.

Pr. group	Pr.	Name	Refer to page
N000	549 *6*7	Protocol selection	139
N001	342	Communication EEPROM write selection	139
N002	539 *6*7	MODBUS RTU communication check time interval	139
N010	349 *9	Communication reset selection/Ready bit status selection	139
N011	500 *9	Communication error execution waiting time	139
N012	501 *9	Communication error occurrence count display	139
N013	502	Stop mode selection at communication error	139
N014	779	Operation frequency during communication error	139
N020	117	PU communication station number	139
N021	118	PU communication speed	139
N022	119	PU communication data length	139
N023	119	PU communication stop bit length	139
N024	120	PU communication parity check	139
N025	121	PU communication retry count	139
N026	122	PU communication check time interval	139
N027	123	PU communication waiting time setting	139
N028	124	PU communication CR/LF selection	139
N030	331 *6*7	RS-485 communication station number	139
N031	332 *6*7	RS-485 communication speed	139

Pr. group	Pr.	Name	Refer to page
N032	333 *6*7	PU communication data length	139
N033	333 *6*7	PU communication stop bit length	139
N034	334 *6*7	RS-485 communication parity check selection	139
N035	335 *6*7	RS-485 communication retry count	139
N036	336 *6*7	RS-485 communication check time interval	139
N037	337 *6*7	RS-485 communication waiting time setting	139
N038	341 *6*7	RS-485 communication CR/LF selection	139
N040	547	USB communication station number	161
N041	548	USB communication check time interval	161
N080	343 *6*7	Communication error count	139
N100	541 *9	Frequency command sign selection	139
N110	434 *5	Network number (CC-Link IE)	139
N111	435 *5	Station number (CC-Link IE)	139
N240	349 *9	Ready bit status selection	139
N241	349 *9	Reset selection when inverter errors cleared	-
N500 to N543, N550 to N559	1300 to 1343, 1350 to 1359	Communication option parameters. For details, refer to the Instruction Manual of the option.	

◆ G: Control Parameter

Parameters for motor control.

Pr. group	Pr.	Name	Refer to page
G000	0	Torque boost Simple	117
G001	3	Base frequency Simple	117
G002	19	Base frequency voltage	117
G003	14	Load pattern selection	120
G010	46	Second torque boost	117
G011	47	Second V/F (base frequency)	117
G020	112	Third torque boost	117
G021	113	Third V/F (base frequency)	117
G030	60	Energy saving control selection	129
G040	100	V/F1 (first frequency)	138
G041	101	V/F1 (first frequency voltage)	138
G042	102	V/F2 (second frequency)	138
G043	103	V/F2 (second frequency voltage)	138
G044	104	V/F3 (third frequency)	138
G045	105	V/F3 (third frequency voltage)	138
G046	106	V/F4 (fourth frequency)	138
G047	107	V/F4 (fourth frequency voltage)	138
G048	108	V/F5 (fifth frequency)	138
G049	109	V/F5 (fifth frequency voltage)	138
G060	673 *7	SF-PR slip amount adjustment operation selection	164
G061	674 *7	SF-PR slip amount adjustment gain	164
G080	617	Reverse rotation excitation current low-speed scaling factor	137
G100	10	DC injection brake operation frequency	119
G101	11	DC injection brake operation time	119
G102	802	Pre-excitation selection	119
G103	850	Brake operation selection	119
G105	522	Output stop frequency	161
G106	250	Stop selection	148
G107	70 *3	Special regenerative brake duty	123
G108	1299	Second pre-excitation selection	119
G110	12	DC injection brake operation voltage	119
G120	882	Regeneration avoidance operation selection	170
G121	883	Regeneration avoidance operation level	170
G122	884	Regeneration avoidance at deceleration detection sensitivity	170
G123	885	Regeneration avoidance compensation frequency limit value	170
G124	886	Regeneration avoidance voltage gain	170
G125	665	Regeneration avoidance frequency gain	170
G130	660	Increased magnetic excitation deceleration operation selection	164
G131	661	Magnetic excitation increase rate	164
G132	662	Increased magnetic excitation current level	164
G200	800	Control method selection	135
G201	85	Excitation current break point	137
G202	86	Excitation current low-speed scaling factor	137
G203	245	Rated slip	148
G204	246	Slip compensation time constant	148
G205	247	Constant-power range slip compensation selection	148
G206	1116	Constant output range speed control P gain compensation	167
G210	803	Constant output range torque characteristic selection	122, 166
G211	820	Speed control P gain 1	167
G212	821	Speed control integral time 1	167
G213	824	Torque control P gain 1 (current loop proportional gain)	167
G214	825	Torque control integral time 1 (current loop integral time)	167
G215	823 *1	Speed detection filter 1	167
G216	827	Torque detection filter 1	167
G217	854	Excitation ratio	169
G218	1115	Speed control integral term clear time	167
G220	877	Speed feed forward control/model adaptive speed control selection	168
G221	878	Speed feed forward filter	168
G222	879	Speed feed forward torque limit	168
G223	881	Speed feed forward gain	168
G224	828	Model speed control gain	168
G230	840	Torque bias selection	168
G231	841	Torque bias 1	168
G232	842	Torque bias 2	168
G233	843	Torque bias 3	168
G234	844	Torque bias filter	168
G235	845	Torque bias operation time	168
G236	846	Torque bias balance compensation	168
G237	847	Fall-time torque bias terminal 1 bias	168
G238	848	Fall-time torque bias terminal 1 gain	168
G240	367 *1	Speed feedback range	156
G241	368 *1	Feedback gain	156
G250	788 *7	Low speed range torque characteristic selection	165
G260	1121	Per-unit speed control reference frequency	167, 168
G261	1117	Speed control P gain 1 (per-unit system)	167
G262	1119	Model speed control gain (per-unit system)	168

Pr. group	Pr.	Name	Refer to page
G263	1348	P/PI control switchover frequency	167
G264	1349	Emergency stop operation selection	174
G300	451	Second motor control method selection	135
G301	565	Second motor excitation current break point	137
G302	566	Second motor excitation current low-speed scaling factor	137
G311	830	Speed control P gain 2	167
G312	831	Speed control integral time 2	167
G313	834	Torque control P gain 2	167
G314	835	Torque control integral time 2	167
G315	833 *1	Speed detection filter 2	167
G316	837	Torque detection filter 2	167
G350	747 *7	Second motor low-speed range torque characteristic selection	165
G361	1118	Speed control P gain 2 (per-unit system)	167
G400	286	Droop gain	153
G401	287	Droop filter time constant	153
G402	288	Droop function activation selection	153
G403	994	Droop break point gain	153
G404	995	Droop break point torque	153
G410	653	Speed smoothing control	163
G411	654	Speed smoothing cutoff frequency	163
G420	679	Second droop gain	153
G421	680	Second droop filter time constant	153
G422	681	Second droop function activation selection	153
G423	682	Second droop break point gain	153
G424	683	Second droop break point torque	153
G601	1003	Notch filter frequency	173
G602	1004	Notch filter depth	173
G603	1005	Notch filter width	173
G932	89	Speed control gain (Advanced magnetic flux vector)	135
G942	569	Second motor speed control gain	135

*1 The setting is available only when a plug-in option that supports the vector control is installed. Refer to the Instruction Manual of each option for details.
*2 The parameter number in parentheses is the one for use with the LCD operation panel and the parameter unit.
*3 Setting can be made only for the standard model.
*4 Setting can be made only for the standard model and the IP55 compatible model.
*5 The setting is available only for the FR-A800-GF or when a compatible plug-in option is installed.
*6 The setting is not available for the FR-A800-E.
*7 Parameter for manufacturer setting for the FR-A842-P. Do not set.
*8 The setting is not available for the FR-A842-P.
*9 The setting is available for the FR-A800-GN or FR-A800-GF, or when a compatible plug-in option is installed.

List of parameters for the FR-A800-E Ethernet communication (by function group)

◆ D: Operation command and frequency command

Parameters that specify the inverter's command source, and parameters that set the motor driving frequency and torque.

Pr. group	Pr.	Name	Refer to page
D012	550	NET mode operation command source selection	155
D013	551	PU mode operation command source selection	155

◆ M: Monitor display and monitor output signal

Parameters regarding the inverter's operating status. These parameters are used to set the monitors and output signals.

Pr. group	Pr.	Name	Refer to page
M400	190	RUN terminal function selection	147
M401	191	SU terminal function selection	147
M402	192	IPF terminal function selection	147
M403	193	OL terminal function selection	147
M404	194	FU terminal function selection	147
M405	195	ABC1 terminal function selection	147
M406	196	ABC2 terminal function selection	147
M410	313	DO0 output selection	147
M411	314	DO1 output selection	147
M412	315	DO2 output selection	147

◆ N: Operation via communication and its settings

Parameters for communication operation. These parameters set the communication specifications and operation.

Pr. group	Pr.	Name	Refer to page
N600	1434	Ethernet IP address 1	139
N601	1435	Ethernet IP address 2	139
N602	1436	Ethernet IP address 3	139
N603	1437	Ethernet IP address 4	139
N610	1438	Subnet mask 1	139
N611	1439	Subnet mask 2	139
N612	1440	Subnet mask 3	139
N613	1441	Subnet mask 4	139
N630	1427	Ethernet function selection 1	139
N631	1428	Ethernet function selection 2	139
N632	1429	Ethernet function selection 3	139
N641	1426	Link speed and duplex mode selection	139
N642	1455	Keepalive time	139
N643	1431	Ethernet signal loss detection function selection	139
N644	1432	Ethernet communication check time interval	139
N650	1424	Ethernet communication network number	139
N651	1425	Ethernet communication station number	139
N660	1442	Ethernet IP filter address 1	139
N661	1443	Ethernet IP filter address 2	139
N662	1444	Ethernet IP filter address 3	139
N663	1445	Ethernet IP filter address 4	139
N664	1446	Ethernet IP filter address 2 range specification	139
N665	1447	Ethernet IP filter address 3 range specification	139
N666	1448	Ethernet IP filter address 4 range specification	139
N670	1449	Ethernet command source selection IP address 1	139
N671	1450	Ethernet command source selection IP address 2	139
N672	1451	Ethernet command source selection IP address 3	139
N673	1452	Ethernet command source selection IP address 4	139
N674	1453	Ethernet command source selection IP address 3 range specification	139
N675	1454	Ethernet command source selection IP address 4 range specification	139
N681	1124	Station number in inverter-to-inverter link	175
N682	1125	Number of inverters in inverter-to-inverter link system	175

List of parameters for the FR-A842-P parallel operation (by function group)

◆ E: Environment setting parameters

Parameters that set the inverter operation characteristics.

Pr. group	Pr.	Name	Refer to page
E390	1001	Parallel operation selection	173

◆ M: Monitor display and monitor output signal

Parameters regarding the inverter's operating status. These parameters are used to set the monitors and output signals.

Pr. group	Pr.	Name	Refer to page
M400	190	RUN terminal function selection	147
M401	191	SU terminal function selection	147
M402	192	IPF terminal function selection	147
M403	193	OL terminal function selection	147
M404	194	FU terminal function selection	147
M405	195	ABC1 terminal function selection	147
M406	196	ABC2 terminal function selection	147

◆ N: Operation via communication and its settings

Parameters for communication operation. These parameters set the communication specifications and operation.

Pr. group	Pr.	Name	Refer to page
N092	652	Parallel operation communication check time	163

List of parameters for the FR-A800-GN CC-Link IE TSN communication (by function group)

◆ N: Operation via communication and its settings

Parameters for communication operation. These parameters set the communication specifications and operation.

Pr. group	Pr.	Name	Refer to page
N700	434	IP address 1	139
N701	435	IP address 2	139
N702	436	IP address 3	139
N703	437	IP address 4	139
N710	438	Sub-network mask 1	139
N711	439	Sub-network mask 2	139
N712	440	Sub-network mask 3	139
N713	441	Sub-network mask 4	139
N760	1442	Ethernet IP filter address 1	139
N761	1443	Ethernet IP filter address 2	139
N762	1444	Ethernet IP filter address 3	139
N763	1445	Ethernet IP filter address 4	139
N764	1446	Ethernet IP filter address 2 range specification	139
N765	1447	Ethernet IP filter address 3 range specification	139
N766	1448	Ethernet IP filter address 4 range specification	139
N746	1459	Clock source selection	139

● Converter unit parameter list (by parameter number)

Set the necessary parameters to meet the load and operational specifications. Parameter setting, change and check can be performed from the operation panel (FR-DU08).

Function	Pr.	Pr. group	Name	Setting range	Minimum setting increments	Initial value	Customer setting
—	30	E300	Reset selection during power supply to main circuit	0, 100	1	0	
Automatic restart	57	A702	Restart selection	0, 9999	1	9999	
—	65 *1	H300	Retry selection	0 to 4	1	0	
Retry	67 *1	H301	Number of retries at fault occurrence	0 to 10, 101 to 110	1	0	
	68 *1	H302	Retry waiting time	0.1 to 600 s	0.1 s	1 s	
	69 *1	H303	Retry count display erase	0	1	0	
—	75	—	Reset selection/disconnected PU detection/ reset limit	14 to 17, 114 to 117	1	14	
		E100	Reset selection	0, 1		0	
		E101	Disconnected PU detection				
		E107	Reset limit				
—	77	E400	Parameter write selection	1, 2	1	2	
PU connector communication	117	N020	PU communication station number	0 to 31	1	0	
	118	N021	PU communication speed	48, 96, 192, 384, 576, 768, 1152	1	192	
	119	—	PU communication stop bit length / data length	0, 10	1	1	
		N022	PU communication data length	0, 1		0	
		N023	PU communication stop bit length	0, 1		1	
	120	N024	PU communication parity check	0 to 2	1	2	
	121	N025	Number of PU communication retries	0 to 10, 9999	1	1	
	122	N026	PU communication check time interval	0, 0.1 to 999.8 s, 9999	0.1 s	9999	
	123	N027	PU communication waiting time setting	0 to 150 ms, 9999	1 ms	9999	
	124	N028	PU communication CR/LF selection	0 to 2	1	1	
—	161	E200	Key lock operation selection	0, 10	1	0	
—	168	E000	Parameter for manufacturer setting.				
		E080					
—	169	E001					
		E081					
Cumulative monitor clear	170	M020	Watt-hour meter clear	0, 10, 9999	1	9999	
Input terminal function assignment	178	T700	RDI terminal function selection	7, 62, 9999	1	9999	
	187	T709	OH terminal function selection		1	7	
	189	T711	RES terminal function selection		1	62	
Output terminal function assignment	190	M400	RDB terminal function selection	2, 8, 11, 17, 25, 26, 64, 68, 90, 94, 95, 98, 99, 102, 108, 111, 125, 126, 164, 168, 190, 194, 195, 198, 199, 206, 207, 209, 210, 214, 227*2, 306, 307, 309, 310, 327*2, 9999	1	111	
	191	M401	RDA terminal function selection		1	11	
	192	M402	IPF terminal function selection		1	2	
	193	M403	RSO terminal function selection		1	209	
	194	M404	FAN terminal function selection		1	25	
	195	M405	ABC1 terminal function selection		1	99	
—	248	A006	Self power management selection	0 to 2	1	0	
Life check	255	E700	Life alarm status display	(0 to 15)	1	0	
	256	E701	Inrush current limit circuit life display	(0 to 100%)	1%	100%	
	257	E702	Control circuit capacitor life display	(0 to 100%)	1%	100%	

Function	Pr.	Pr. group	Name	Setting range	Minimum setting increments	Initial value	Customer setting
—	261	A730	Power failure stop selection	0, 1, 2, 21, 22	1	0	
—	268	M022	Monitor decimal digits selection	0, 1, 9999	1	9999	
—	269	E023	Parameter for manufacturer setting. Do not set.				
—	290	M044	Monitor negative output selection	0, 2, 4, 6	1	0	
Password function	296	E410	Password lock level	0 to 3, 5, 6, 100 to 103, 105, 106, 9999	1	9999	
	297	E411	Password lock/unlock	(0 to 5), 1000 to 9998, 9999	1	9999	
RS-485 communication	331 *1	N030	RS-485 communication station number	0, 31 (0, 247)	1	0	
	332 *1	N031	RS-485 communication speed	3, 6, 12, 24, 48, 96, 192, 384, 576, 768, 1152	1	96	
	333 *1	—	RS-485 communication stop bit length / data length	0, 1, 10, 11	1	1	
		N032	RS-485 communication data length	0, 1	1	0	
		N033	RS-485 communication stop bit length	0, 1	1	1	
	334 *1	N034	RS-485 communication parity check selection	0 to 2	1	2	
	335 *1	N035	RS-485 communication retry count	0 to 10, 9999	1	1	
	336 *1	N036	RS-485 communication check time interval	0 to 999.8 s, 9999	0.1 s	0 s	
	337 *1	N037	RS-485 communication waiting time setting	0 to 150 ms, 9999	1 ms	9999	
	341 *1	N038	RS-485 communication CR/LF selection	0 to 2	1	1	
	342	N001	Communication EEPROM write selection	0, 1	1	0	
	343 *1	N080	Communication error count	—	1	0	
Maintenance	503	E710	Maintenance timer 1	0 (1 to 9998)	1	0	
	504	E711	Maintenance timer 1 warning output set time	0 to 9998, 9999	1	9999	
—	539 *1	N002	MODBUS RTU communication check time interval	0 to 999.8 s, 9999	0.1 s	9999	
Communication	549 *1	N000	Protocol selection	0, 1	1	0	
—	563	M021	Energization time carrying-over times	(0 to 65535)	1	0	
—	598	H102	Undervoltage level	350 to 430 V, 9999	0.1 V	9999	
—	652 *2	N092	Parallel operation communication check time	0, 0.1 to 120 s, 9999	0.1 s	1 s	
—	663	M060	Control circuit temperature signal output level	0 to 100°C	1°C	0°C	
Maintenance	686	E712	Maintenance timer 2	0 (1 to 9998)	1	0	
	687	E713	Maintenance timer 2 warning output set time	0 to 9998, 9999	1	9999	
	688	E714	Maintenance timer 3	0 (1 to 9998)	1	0	
	689	E715	Maintenance timer 3 warning output set time	0 to 9998, 9999	1	9999	
Monitor function	774	M101	Operation panel monitor selection 1	2, 8, 13, 20, 25, 43, 44, 55, 62, 98, 9999	1	9999	
	775	M102	Operation panel monitor selection 2		1	9999	
	776	M103	Operation panel monitor selection 3		1	9999	
Protective Functions	872	H201	Input phase loss protection selection	0, 1	1	0	
—	876	T723	OH input selection	0 to 2	1	0	

Function	Pr.	Pr. group	Name	Setting range	Minimum setting increments	Initial value	Customer setting
Free parameters	888	E420	Free parameter 1	0 to 9999	1	9999	
	889	E421	Free parameter 2	0 to 9999	1	9999	
Energy saving monitor	891	M023	Cumulative power monitor digit shifted times	0, 4, 9999	1	9999	
PU	990	E104	PU buzzer control	0, 1	1	1	
Monitor function	992	M104	Operation panel setting dial push monitor selection	2, 8, 13, 20, 25, 43, 44, 55, 62, 98	1	8	
—	997	H103	Fault initiation	0 to 255, 9999	1	9999	
Parallel operation	1001 *2	E390	Parallel operation selection	1, 2, 100, 200, 300	1	100	
Clock function	1006	E020	Clock (year)	2000 to 2099	1	2000	
	1007	E021	Clock (month, day)	1/1 to 12/31	1	101	
	1008	E022	Clock (hour, minute)	0:00 to 23:59	1	0	
—	1048	E106	Display-off waiting time	0 to 60 min	1 min	0	
Clear parameters	Pr.CLR		Parameter clear	(0), 1	1	0	
	ALL.CL		All parameter clear	(0), 1	1	0	
	Err.CL		Fault history clear	(0), 1	1	0	
—	Pr.CPY		Parameter copy	(0), 1 to 3	1	0	
—	Pr.CHG		Initial value change list	—	1	0	
—	Pr.MD		Group parameter setting	(0), 1, 2	1	0	

*1 Parameter for manufacturer setting for the FR-CC2-P. Do not set.
*2 The parameter is available for the FR-CC2-P only.

The following marks are used to show the applicable control method: V/F for V/F control, Magnetic flux for Advanced magnetic flux vector control, Sensorless for Real sensorless vector control, Vector for vector control, and PM for PM sensorless vector control. (Parameters without any mark are valid for all controls.)

Pr.……denotes parameter numbers, and GROUP……denotes group parameter numbers.

Connection diagrams appear with the control logic of the input terminals as sink logic, unless otherwise specified.

Manual torque boost V/F

Pr.	GROUP	Name	Pr.	GROUP	Name
0	G000	Torque boost	46	G010	Second torque boost
112	G020	Third torque boost			

Voltage drop in the low-frequency range can be compensated, improving reduction of the motor torque in the low-speed range.

- Motor torque in the low-frequency range can be adjusted according to the load, in order to increase the motor torque at start.
- The RT and X9 signals enable the switching between 3 types of torque boost.
- Available during V/F control.

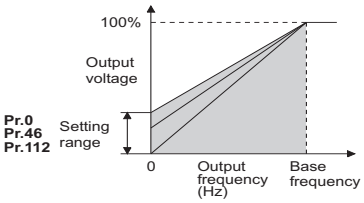

Limiting the output frequency (maximum/minimum frequency)

Pr.	GROUP	Name	Pr.	GROUP	Name
1	H400	Maximum frequency	2	H401	Minimum frequency
18	H402	High speed maximum frequency			

Motor speed can be limited.

- Clamp the upper and lower limits of the output frequency.
- To operate at a frequency higher than 120 Hz, adjust the maximum output frequency with **Pr.18**.
  (If a frequency is set in **Pr.18**, the **Pr.1** setting automatically changes to the frequency set in **Pr.18**. Also, if a frequency is set in **Pr.1**, the **Pr.18** setting automatically changes to the frequency set in **Pr.1**.)
- During position control under vector control, the maximum frequency is valid for the speed command calculated considering the droop pulses. The lower frequency limit is disabled.

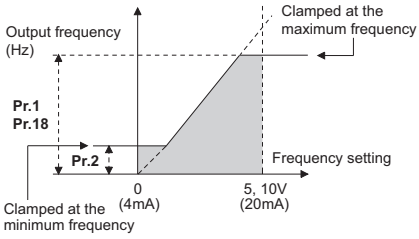

Base frequency, voltage V/F

Pr.	GROUP	Name	Pr.	GROUP	Name
3	G001	Base frequency	19	G002	Base frequency voltage
47	G011	Second V/F (base frequency)	113	G021	Third V/F (base frequency)

Use this function to adjust the inverter outputs (voltage, frequency) to match with the motor rating.

- When operating a standard motor, generally set the rated frequency of the motor in **Pr.3 Base frequency**. When running the motor using commercial power supply-inverter switch-over operation, set **Pr.3** to the same value as the power supply frequency.
- When you want to change the base frequency when switching multiple motors with one inverter, etc., use the **Pr.47 Second V/F (base frequency)** and **Pr.113 Third V/F (base frequency)**.
- Set the rated voltage (rated motor voltage, etc.) to the Pr.19 **Base frequency voltage**.
- Available during V/F control.

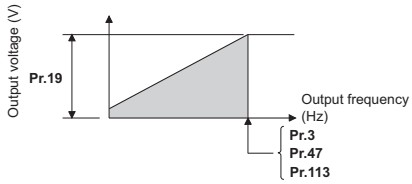

Multi-speed setting operation

Pr.	GROUP	Name	Pr.	GROUP	Name
4	D301	Multi-speed setting (high speed)	5	D302	Multi-speed setting (middle speed)
6	D303	Multi-speed setting (low speed)	24	D304	Multi-speed setting (speed 4)
25	D305	Multi-speed setting (speed 5)	26	D306	Multi-speed setting (speed 6)
27	D307	Multi-speed setting (speed 7)	28	D300	Multi-speed input compensation selection
232	D308	Multi-speed setting (speed 8)	233	D309	Multi-speed setting (speed 9)
234	D310	Multi-speed setting (speed 10)	235	D311	Multi-speed setting (speed 11)
236	D312	Multi-speed setting (speed 12)	237	D313	Multi-speed setting (speed 13)
238	D314	Multi-speed setting (speed 14)	239	D315	Multi-speed setting (speed 15)

Use these parameters to change among pre-set operation speeds with contact signals. The speeds are pre-set with parameters.
Any speed can be selected by simply turning ON/OFF the contact signals (RH, RM, RL, and REX signals).

- The inverter operates at the frequency set in **Pr.4** when RH signal is ON, **Pr.5** when RM signal is ON and **Pr.6** when RL signal is ON.
- The frequency from 4th speed to 15th speed can be set in accordance with the combination of the RH, RM, RL, and REX signals. Set the running frequencies in **Pr.24** to **Pr.27** and **Pr.232** to **Pr.239**. (In the initial status, 4th speed to 15th speed are invalid.)

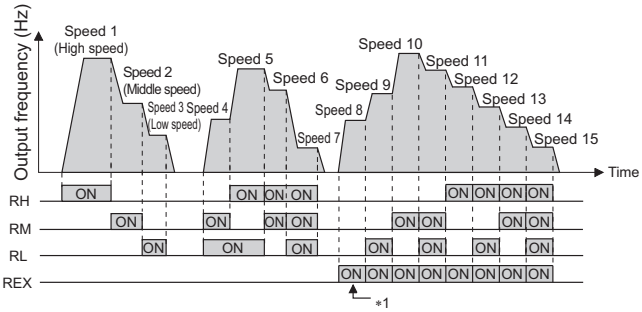

*1 Operates at the frequency set in **Pr.6** when RH, RM, or RL is OFF and REX is ON while **Pr.232 Multi-speed setting (speed 8)** = "9999".

- Speed (frequency) can be compensated for the multi-speed setting and the remote setting by inputting the frequency setting compensation signal (terminals 1, 2).

Pr.28 setting	Description
0 (initial value)	Without compensation
1	With compensation

Acceleration/deceleration time

Pr.	GROUP	Name	Pr.	GROUP	Name
7	F010	Acceleration time	8	F011	Deceleration time
20	F000	Acceleration/ deceleration reference frequency	21	F001	Acceleration/ deceleration time increments
44	F020	Second acceleration/ deceleration time	45	F021	Second deceleration time
110	F030	Third acceleration/ deceleration time	111	F031	Third deceleration time
147	F022	Acceleration/ deceleration time switching frequency	791	F070	Acceleration time in low-speed range
792	F071	Deceleration time in low-speed range			

The following parameters are used to set motor acceleration/ deceleration time.
Set a larger value for a slower acceleration/deceleration, and a smaller value for a faster acceleration/deceleration.

- Use **Pr.7 Acceleration time** to set the acceleration time required to reach **Pr.20 Acceleration/deceleration reference frequency** from a stop status.
- Use **Pr.8 Deceleration time** to set the deceleration time required to reach a stop status from **Pr.20 Acceleration/deceleration reference frequency**.

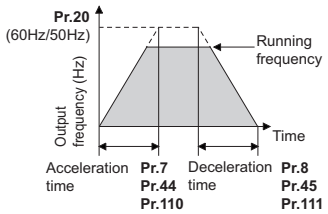

Pr.21 setting	Description	
0 (initial value)	Increment: 0.1 s	Set the increment for the acceleration/deceleration time setting.
1	Increment: 0.01 s	

- **Pr.44** and **Pr.45** are valid when the RT signal is ON or when the output frequency is equal to or higher than the frequency set in **Pr.147 Acceleration/deceleration time switching frequency**.**Pr.110** and **Pr.111** are valid when the X9 signal is ON.

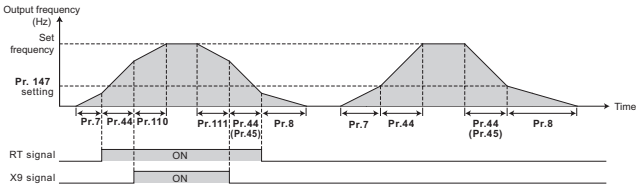

- If torque is required in the low-speed range (less than 10% of the rated motor frequency) under PM sensorless vector control, set the **Pr.791 Acceleration time in low-speed range** and **Pr.792 Deceleration time in low-speed range** settings higher than the **Pr.7 Acceleration time** and **Pr.8 Deceleration time** settings so that the mild acceleration/deceleration is performed in the low-speed range. Enabled especially under the current synchronization operation.
(This function is not available for the FR-A842-P.)

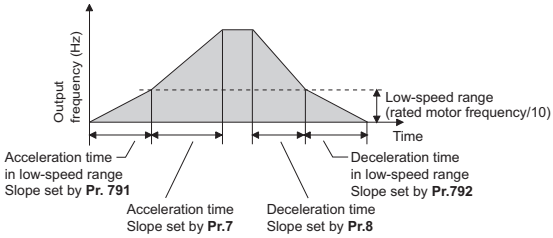

Overheat protection of the motor (electronic thermal O/L relay)

Pr.	GROUP	Name	Pr.	GROUP	Name
9	H000	Electronic thermal O/L relay	51	H010	Second electronic thermal O/L relay
561	H020	PTC thermistor protection level	600	H001	First free thermal reduction frequency 1
601	H002	First free thermal reduction ratio 1	602	H003	First free thermal reduction frequency 2
603	H004	First free thermal reduction ratio 2	604	H005	First free thermal reduction frequency 3
607	H006	Motor permissible load level	608	H016	Second motor permissible load level
692	H011	Second free thermal reduction frequency 1	693	H012	Second free thermal reduction ratio 1
694	H013	Second free thermal reduction frequency 2	695	H014	Second free thermal reduction ratio 2
696	H015	Second free thermal reduction frequency 3	876	H022	Thermal protector input
1016	H021	PTC thermistor protection detection time			

Set the current for the electronic thermal O/L relay to protect the motor from overheating. Such a setting will provide the optimum protective characteristic considering the low cooling capability of the motor during low-speed operation.

- This function detects the overload (overheat) of the motor and trips the inverter by stopping the operation of the transistor at the inverter output side.
- Set the rated motor current (A) in **Pr.9**.
  (If the motor has both 50 Hz and 60 Hz ratings and the **Pr.3 Base frequency** is set to 60 Hz, set to 1.1 times the 60 Hz rated motor current.
- Set "0" in **Pr.9** to avoid activating the electronic thermal relay function; for example, when using an external thermal relay for the motor. (Note that the output transistor protection of the inverter is enabled. (E.THT))
- Mitsubishi Electric constant-torque motor
  Set one of "1, 13 to 18, 50, 53, or 54" in **Pr.71**. (This setting will enable the 100% constant-torque characteristic in the low-speed range.)
- When using an IPM motor (MM-CF), perform IPM parameter initialization to automatically set the rated current of the IPM motor.
- The outputs from the PTC thermistor built into the motor can be input to terminals 2 and 10. When the input from the PTC thermistor reaches the resistance value set in **Pr.561**, PTC thermistor operation (E.PTC) will be activated to shut off the inverter outputs.
- When the PTC thermistor protection level setting is used, use **Pr.1016** to set the time from when the resistance of the PTC thermistor reaches the protection level until the protective function (E.PTC) is activated.
- The activation level of the electronic thermal O/L relay **Pr.600** to **Pr.604** (**Pr.692** to **Pr.696**) can be varied according to the thermal characteristic of the motor.
- While the RT signal is ON, the setting values of **Pr.51** and **Pr.692** to **Pr.696** are referred to provide thermal protection. Use the electronic thermal O/L relay function to drive two motors of different current ratings by one inverter. (To rotate two motors at once, use an external thermal relay.)
- To change the operational characteristic of the electronic thermal O/L relay, set the permissible load level in **Pr.607** or **Pr.608** according to the motor characteristics.
- Use **Pr.876** to set valid/invalid status of terminal OH function when the FR-A8TP is installed.

DC injection brake, zero speed control, and servo lock

Pr.	GROUP	Name	Pr.	GROUP	Name
10	G100	DC injection brake operation frequency	11	G101	DC injection brake operation time
12	G110	DC injection brake operation voltage	802	G102	Pre-excitation selection
850	G103	Brake operation selection	1299	G108	Second pre-excitation selection

When stopping a motor, DC injection brake is applied to adjust the braking torque and timing to stop the motor.

- By setting the frequency to operate the DC injection brake (zero speed control and servo lock) to **Pr.10 DC injection brake operation frequency**, the DC injection brake (zero speed control and servo lock) will operate when it reaches this frequency at the time of deceleration.

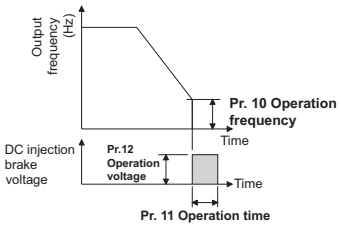

- Set the time applying the DC injection brake (zero speed control and servo lock) to **Pr.11 DC injection brake operation time**.
- **Pr.12 DC injection brake operation voltage** will set the percent against the power supply voltage. (Not used at the time of zero speed control or servo lock)
- Under Real sensorless vector control, **Pr.850** can be used to select DC injection brake (setting value "0", initial value), zero speed control (setting value "1"), or magnetic flux decay output shutoff (setting value "2").
- When speed control is selected under vector control or PM sensorless vector control, pre-excitation braking operation by the LX signal can either be zero speed control or servo lock control. Pre-excitation is valid at LX signal ON.

Pr.802 (Pr.1299) Setting value	Braking operation	Description
0 (initial value)	Zero speed control	It will try to maintain 0 r/min so the motor shaft will not rotate even when a load is applied. However, it will not return to its original position when the shaft moves due to external force.
1	Servo lock	It will try to maintain the position of the motor shaft even if a load is applied. When the shaft moves due to external force, it will return to its original position after the external force is removed.

- For the vector control and PM sensorless vector control, set the frequency at where the zero speed control or servo lock control activates (**Pr.10**) and the operating period of the control (**Pr.11**). Use **Pr.802** to select whether the zero speed control or servo lock control. During vector control, the initial value of **Pr.10** is automatically set to 0.5 Hz.
- Turning ON the RT signal enables the second pre-excitation selection.

Starting frequency and start-time hold function V/F Magnetic flux Sensorless Vector

Pr.	GROUP	Name	Pr.	GROUP	Name
13	F102	Starting frequency	571	F103	Holding time at a start

The starting frequency can be set and the starting frequency can be held for a certain period of time.
Set these functions when starting torque is needed or the motor drive at start needs smoothing.

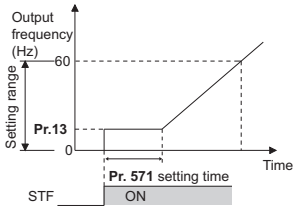

Minimum frequency at motor start and start-time hold function PM

Pr.	GROUP	Name	Pr.	GROUP	Name
13	F102	Starting frequency	571	F103	Holding time at a start

Set the frequency where the PM motor starts running.

- When setting a frequency with analog input, set the deadband in the low-speed range to eliminate noise and offset deviation.
- When the low-speed range high-torque characteristic function is enabled (**Pr.788** = "9999"), the frequency level of 0.01 Hz is held for the time period of **Pr.571** after turning ON the start signal.

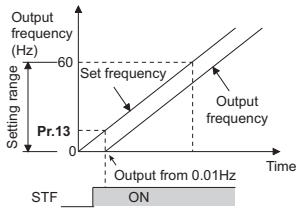

V/F patterns for various applications V/F

Pr.	GROUP	Name
14	G003	Load pattern selection

Optimal output characteristics (V/F characteristics) for application or load characteristics can be selected. Available during V/F control.

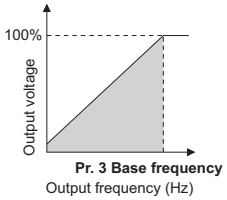

- Constant-torque load application (setting "0", initial value)
  The output voltage will change linearly against the output frequency at the base frequency or lower.
  Set this parameter when driving a load that has constant load torque even when the rotation speed is changed, such as a conveyor, dolly, or roll drive.

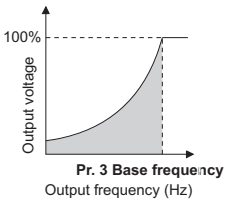

- Variable-torque load applications (setting value "1")
  The output voltage will change in square curve against the output frequency at the base frequency or lower.
  Set this parameter when driving a load with load torque change proportionally against the square of the rotation speed, such as a fan or pump.

- Vertical lift load applications (setting value "2, 3")
  Set "2" for a vertical lift load that is in power driving at forward rotation and in regenerative driving at reverse rotation.
  Pr.0 Torque boost is valid during forward rotation, and torque boost is automatically changed to "0%" during reverse rotation.
  Set "3" for the counterweight system, etc. that is in power driving at reverse rotation and in regenerative driving at forward rotation, according to the load weight.

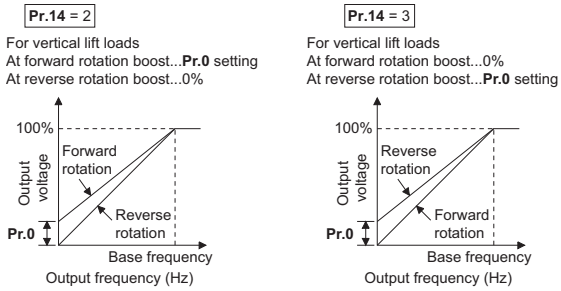

- Switching applied load selection with a terminal (setting value "4, 5")
  The RT and X17 signals enable the switching between the constant-torque load operation and lift operation.

Pr.14 Setting value	RT(X17) signal	output characteristic
4	ON	For constant-torque load (same as the setting value "0")
	OFF	For lift, boost at reverse rotation 0% (same as the setting value "2")
5	ON	For constant-torque load (same as the setting value "0")
	OFF	For lift, boost at reverse rotation 0% (same as the setting value "3")

JOG operation

Pr.	GROUP	Name	Pr.	GROUP	Name
15	D200	Jog frequency	16	F002	Jog acceleration/ deceleration time

The frequency and acceleration/deceleration time for JOG operation can be set. JOG operation is possible in both External operation and PU.
JOG operation can be used for conveyor positioning, test operation, etc.

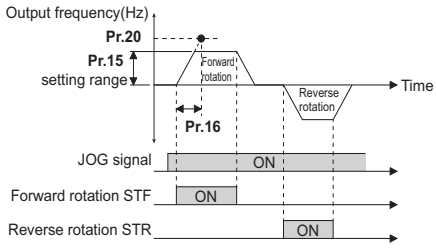

Inverter output shutoff signal

Pr.	GROUP	Name
17	T720	MRS input selection

The inverter output can be shut off with the MRS signal. The logic of the MRS signal can also be selected.
When **Pr.17**="4", the MRS signal from an external terminal is be set as the normally closed (NC contact) input, and the MRS signal (output stop) via communication as the normally open (NO contact) input.

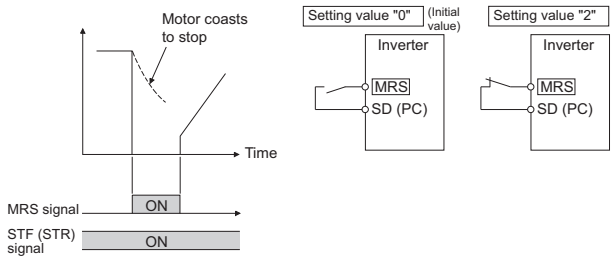

Pr. 18 Refer to the page on Pr.1
Pr. 19 Refer to the page on Pr.3
Pr. 20, 21 Refer to the page on Pr.7

Stall prevention operation

V/F Magnetic flux

Pr.	GROUP	Name	Pr.	GROUP	Name
22	H500	Stall prevention operation level	23	H610	Stall prevention operation level compensation factor at double speed
48	H600	Second stall prevention operation level	49	H601	Second stall prevention operation frequency
66	H611	Stall prevention operation reduction starting frequency	114	H602	Third stall prevention operation level
115	H603	Third stall prevention operation frequency	148	H620	Stall prevention level at 0 V input
149	H621	Stall prevention level at 10 V input	154	H631	Voltage reduction selection during stall prevention operation
156	H501	Stall prevention operation selection	157	M430	OL signal output timer
858	T040	Terminal 4 function assignment	868	T010	Terminal 1 function assignment

This function monitors the output current and automatically changes the output frequency to prevent the inverter from tripping due to overcurrent, overvoltage, etc. It can also limit the stall prevention and fast-response current limit operation during acceleration/deceleration and power/regenerative driving.
This function is disabled during Real sensorless vector control, vector control and PM sensorless vector control.

- Stall prevention
  If the output current exceeds the stall prevention operation level, the output frequency of the inverter is automatically changed to reduce the output current. Also the second and third stall prevention functions can limit the output frequency range in which the stall prevention function is enabled.
- Fast-response current limit
  If the current exceeds the limit value, the output of the inverter is shut off to prevent an overcurrent. (This function is not available for the FR-A842-P.)

- For **Pr.22**, set the ratio of the output current to the inverter rated current at which the stall prevention operation will be activated. Normally, this should be set at 150% (initial value).
  For the FR-A820-00250(3.7K) or lower and FR-A840-00126(3.7K) or lower, when the control method is changed from V/F control or Advanced magnetic flux vector control to Real sensorless vector control, or vector control, the **Pr.22** setting changes from 150% (initial value) to 200%.
- To set the stall prevention operation level with the analog signal via terminal 1 (terminal 4), set **Pr.868** (**Pr.858**)="4". Use **Pr.148** and **Pr.149** to adjust gain and bias for the analog signals.
- When operating at the rated motor frequency or higher, acceleration may not be made because the motor current does not increase. Also, when operating in the high-frequency range, the current flowing to the locked motor becomes less than the rated output current of the inverter; and even if the motor is stopped, the protective function will not operate (OL).
  In a case like this, the stall prevention level can be reduced in the high-frequency range to improve the motor's operating characteristics. This is useful when operating up to the high speed range, such as when using a centrifuge. Normally, set **Pr.66** to 60 Hz, and **Pr.23** to 100%.
- When **Pr.23**="9999" (initial value), the stall prevention operation level is constant at the **Pr.22** level up to 590 Hz.

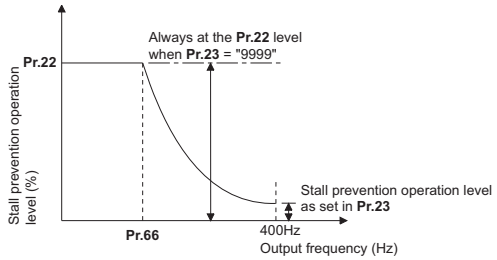

- By setting **Pr.49**="9999" and turning ON the RT signal, **Pr.48** will be enabled.
- To enable **Pr.114**, set **Pr.115**≠ "0" and turn ON the X9 signal.
- Use **Pr.48 (Pr.114)** to set the stall prevention operation level applicable in the range between 0 Hz and the frequency set in **Pr.49 (Pr.115)**.

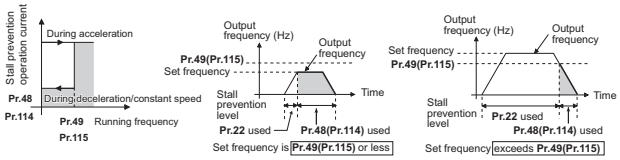

Pr.49 setting	Pr.115 setting	Operation
0 (initial value)		The second (third) stall prevention function disabled.
0.01 Hz to 590 Hz		The second (third) stall prevention function operates according to the frequency.
9999	Setting not available	The second stall prevention function operates according to the RT signal. RT signal ON: stall level **Pr.48** RT signal OFF: stall level **Pr.22**

- Use **Pr.154** to further suppress the activation of the protective function (E.OC[], E.OV[]) during stall prevention operation.
- Use **Pr.156** to suppress the stall prevention operation and the fast-response current limit in accordance with the operating status.
- When Real sensorless vector control, vector control or PM sensorless vector control is selected using **Pr.800**, **Pr.22** serves as the torque limit level.

Setting the torque limit level under speed control Sensorless Vector PM

Pr.	GROUP	Name	Pr.	GROUP	Name
22	H500	Stall prevention operation level (Torque limit level)	157	M430	OL signal output timer
801	H704	Output limit level	803	G210	Constant output range torque characteristic selection
804	D400	Torque command source selection	805	D401	Torque command value (RAM)
806	D402	Torque command value (RAM, EEPROM)	810	H700	Torque limit input method selection
811	D030	Set resolution switchover	812	H701	Torque limit level (regeneration)
813	H702	Torque limit level (3rd quadrant)	814	H703	Torque limit level (4th quadrant)
815	H710	Torque limit level 2	816	H720	Torque limit level during acceleration
817	H721	Torque limit level during deceleration	858	T040	Terminal 4 function assignment
868	T010	Terminal 1 function assignment	874	H730	OLT level setting

During speed control under Real sensorless vector control, vector control and PM sensorless vector control, the output torque is limited to prevent it from exceeding a specified value.

- The torque limit level can be set in a range of 0 to 400% using **Pr.22**. When the TL signal is ON, the torque limit level 2 (**Pr.815**) is enabled.
- The torque limit level can be selected by setting it with a parameter, or by using analog input terminals (terminals 1, 4). Also, the torque limit level at forward rotation (power driving/ regenerative driving) and reverse rotation (power driving/ regenerative driving) can be set individually.

Pr.	Setting range	Description
810	0 (initial value)	Torque limit by parameter setting
	1	Torque limit using the analog signals input to terminals 1 and 4.
	2	Torque limit by communication options
812	0 to 400%	Set the torque limit level for forward rotation regenerative driving.
	9999 (initial value)	Limit using **Pr.22** or the analog terminal values.
813	0 to 400%	Set the torque limit level for reverse rotation power driving.
	9999 (initial value)	Limit using **Pr.22** or the analog terminal values.
814	0 to 400%	Set the torque limit level for reverse rotation regenerative driving.
	9999 (initial value)	Limit using **Pr.22** or the analog terminal values.

- When inputting an analog signal from terminal 1 (4) to set the torque limit level, set **Pr.810**="1" or **Pr.868 (Pr.858)**="4".
- The torque limit value can be input via CC-Link (using the FR-A8NC) or CC-Link IE Field network (using the FR-A8NCE or FR-A800-GF) communication.
- Use **Pr.816** and **Pr.817** to set the torque limit value during acceleration/deceleration.
- To avoid overload or overcurrent of the inverter or motor, use **Pr.801 Output limit level** to limit the torque current.

Pr.801 setting	Description
0 to 400%	Set the torque current limit level.
9999	Torque current limit using torque limit setting value (**Pr.22**, **Pr.812 to Pr.817**, etc.)

- For the torque limit operation during Real sensorless vector control and vector control, use **Pr.803** to change the torque characteristic in the low-speed range and in the constant output range.

Pr.803 setting	Torque characteristic in low-speed range	Torque characteristic in constant-outpu range	
		Torque characteristic	Output limit
0 (initial value)	Torque changes according to the scaling factor set in **Pr.86**. *1	Constant motor output	—
1	Constant torque	Constant torque	Without
2	Constant torque	Constant torque	With
10	Constant torque	Constant motor output	—
11	Torque changes according to the scaling factor set in **Pr.86**. *1	Constant torque	Without

*1 This function is only available under Real sensorless vector control. The upper limit of the torque at 0 Hz is determined by multiplying the torque limit in the constant-torque range by the scaling factor set in **Pr.86**.

- The inverter can be set to trip at activation of torque limit operation and stalling of the motor. Use **Pr.874** to set the output torque where the protective function activates.
- Use **Pr.811** to change the parameter setting increment for the torque limit setting from 0.1% to 0.01%.
- If **Pr.800** is used to select V/F control or Advanced magnetic flux vector control, the **Pr.22** setting operates as the stall prevention operation level.

Pr.24 to 28 Refer to the page on Pr.4

Acceleration/deceleration pattern and backlash measures

Pr.	GROUP	Name	Pr.	GROUP	Name
29	F100	Acceleration/ deceleration pattern selection	140	F200	Backlash acceleration stopping frequency
141	F201	Backlash acceleration stopping time	142	F202	Backlash deceleration stopping frequency
143	F203	Backlash deceleration stopping time	380	F300	Acceleration S-pattern 1
381	F301	Deceleration S-pattern 1	382	F302	Acceleration S-pattern 2
383	F303	Deceleration S-pattern 2	516	F400	S-pattern time at a start of acceleration
517	F401	S-pattern time at a completion of acceleration	518	F402	S-pattern time at a start of deceleration
519	F403	S-pattern time at a completion of deceleration			

The acceleration/deceleration pattern can be set according to the application.
In addition, the backlash measures, which stop acceleration/ deceleration at certain frequency or time set in parameters during acceleration/deceleration, can be set.

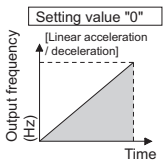

- Linear acceleration/deceleration (setting value "0", initial value)
  When the frequency is changed for acceleration, deceleration, etc. during inverter operation, the output frequency is changed linearly (linear acceleration/ deceleration) to reach the set frequency without straining the motor and inverter.

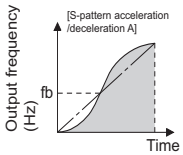

- S-pattern acceleration/deceleration A (setting value "1")
  For the main shaft of a machine, etc.
  Use this when quick acceleration/deceleration is required to reach a high-speed area equal to or higher than the base frequency.

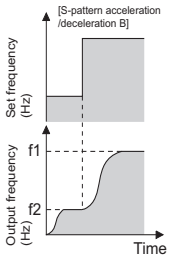

- S-pattern acceleration/deceleration B (setting value "2")
  This is useful for preventing stacks from collapsing on a conveyor, etc.
  S-pattern acceleration/deceleration B can reduce the impact during acceleration/deceleration by accelerating/decelerating in an S-pattern from the present frequency (f2) to the target frequency (f1).

- Backlash measures (setting value "3", **Pr.140** to **Pr.143**)
  To avoid backlash, acceleration/deceleration is temporarily stopped. Set the acceleration/deceleration stopping frequency and time in **Pr.140** to **Pr.143**.

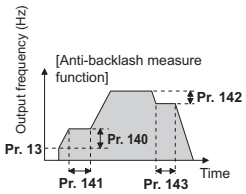

- S-pattern acceleration/deceleration C (setting value "4", **Pr.380** to **Pr.383**)
  The acceleration/deceleration curve is switched by the S-pattern acceleration/deceleration C switchover (X20) signal.
  Set the ratio (%) of time for drawing an S-shape in **Pr.380** to **Pr.383** with the acceleration time as 100%.

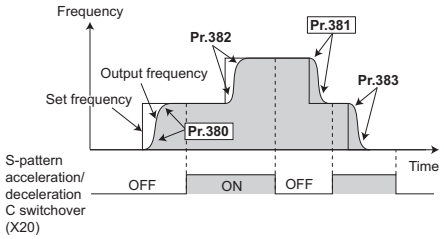

- S-pattern acceleration/deceleration D (setting value "5", **Pr.516** to **Pr.519**)
  Set the time required for S-pattern operation part of S-pattern acceleration/deceleration with **Pr.516** to **Pr.519**.

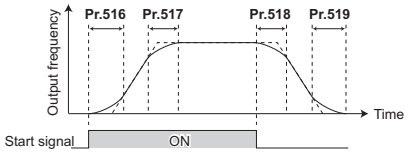

- Variable-torque acceleration/deceleration (**Pr.29**="6")
  This function is useful for variable-torque load such as a fan or blower to accelerate/decelerate in short time.
  In areas where output frequency > base frequency, the speed accelerates/decelerates linearly.

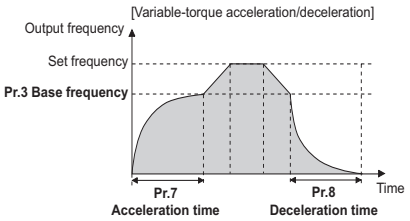

Selecting the regenerative brake and DC feeding

Pr.	GROUP	Name	Pr.	GROUP	Name
30	E300	Regenerative function selection	70	G107	Special regenerative brake duty
599	T721	X10 terminal input selection			

- By using the optional high-duty brake resistor (FR-ABR) or the brake unit (FR-BU2, BU, FR-BU), the regenerative brake duty can be increased for the operation with frequent starts and stops.
- The multifunction regeneration converter (FR-XC in power regeneration mode), power regeneration common converter (FR-CV) (for 55K or lower), and power regeneration converter (MT-RC) (for 75K or higher) are used for continuous operation during regenerative driving.
  The high power factor converter (FR-HC2) and multifunction regeneration converter (FR-XC in common bus regeneration mode) can also be used for harmonic suppression and power factor improvement.
- For standard models and IP55 compatible models, it is possible to choose between the DC feeding mode 1, which will operate with DC power supply (terminals P and N), and DC feeding mode 2, which will normally operate in AC power supply (terminals R, S, and T) and operate in DC power supply (terminal P and N), such as batteries, at the time of power failure.
- Standard model
  For FR-A820-03160(55K) or lower and FR-A840-01800(55K) or lower

Regeneration unit	Power supply to the inverter	Pr.30 setting value	Pr.70 setting value
When the built-in brake, Brake unit (FR-BU2, BU, FR-BU *1)	R, S, T	0 (initial value), 100	Brake duty differs according to the capacity.
	P, N	10, 110	
	R, S, T/P, N	20, 120	
High-duty brake resistor (FR-ABR)	R, S, T	1, 101	10%*3 6%*4
	P, N	11, 111	
	R, S, T/P, N	21, 121	
Multifunction regeneration converter (FR-XC) (Power regeneration mode)	R, S, T	0	—
High power factor converter (FR-HC2), Multifunction regeneration converter (FR-XC) (Common bus regeneration mode), Power regeneration common converter (FR-CV)	P, N	2, 102	0% (initial value)

FR-A820-03800(75K) or higher, FR-A840-02160(75K) or higher

Regeneration unit	Power supply to the inverter	Pr.30 setting value	Pr.70 setting value
No regenerative function	R, S, T	0 (initial value), 100	—
	P, N	10, 110	
	R, S, T/P, N	20, 120	
Brake unit (FR-BU2*2)	R, S, T	1, 101	0% (initial value)
	P, N	11, 111	
	R, S, T/P, N	21, 121	
Power regeneration converter (MT-RC)	R, S, T	1, 101	0% (initial value)
Multifunction regeneration converter (FR-XC) (Power regeneration mode)	R, S, T	0	—
High power factor converter (FR-HC2)	P, N	2, 102	—

- Separated converter type

Regeneration unit	Power supply to the inverter	Pr.30 setting value
No regenerative function (FR-CC2)	P, N	10 (initial value), 110
Brake unit (FR-CC2+FR-BU2*2)	P, N	11, 111
High power factor converter (FR-HC2)	P, N	2, 102

- IP55 compatible model

Regeneration unit	Power supply to the inverter	Pr.30 setting value
Brake unit (FR-BU2, BU, FR-BU*1)	R, S, T	0 (initial value), 100
	P, N	10, 110
	R, S, T/P, N	20, 120
High power factor converter (FR-HC2), Power regeneration common converter (FR-CV)	P, N	2, 102

*1 Used in combination with GZG, GRZG, or FR-BR.
*2 Used in combination with MT-BR5
*3 Setting for the FR-A820-00490(7.5K) or lower and FR-A840-00250(7.5K) or lower
*4 Setting for the FR-A820-00630(11K) or higher and FR-A840-00310(11K) or higher

- When set to **Pr.599** = "1", X10 signal can be changed to normally closed (NC contact) input specification.

Avoiding machine resonance points (frequency jump)

Pr.	GROUP	Name	Pr.	GROUP	Name
31	H420	Frequency jump 1A	32	H421	Frequency jump 1B
33	H422	Frequency jump 2A	34	H423	Frequency jump 2B
35	H424	Frequency jump 3A	36	H425	Frequency jump 3B
552	H429	Frequency jump range			

When it is desired to avoid resonance attributable to the natural frequency of a mechanical system, these parameters allow resonant frequencies to be jumped.

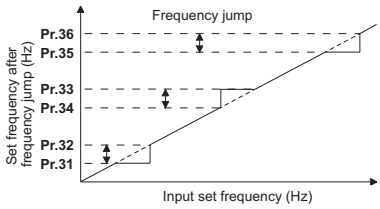

- Up to three areas can be set, with the jump frequencies set to either the top or bottom point of each area.
- The frequency jumps 1A, 2A, 3A can be set and operation is performed at these frequencies in the jump areas.
- At the initial setting "9999", frequency jumps are not performed.
- During acceleration/deceleration, the running frequency within the set area is valid.
- A total of six jump areas can be set **Pr.552** by setting the common jump range for the frequencies set in **Pr.31** to **Pr.36**.

Speed display and speed setting

Pr.	GROUP	Name	Pr.	GROUP	Name
37	M000	Speed display	144	M002	Speed setting switchover
505	M001	Speed setting reference	811	D030	Set resolution switchover

The monitor display unit and the frequency setting on PU(FR-DU08/FR-PU07) can be switched to motor speed and machine speed.

- The setting increment for each monitor is determined by the combination of **Pr.37** and **Pr.144**. (The initial values are shown within the thick lines.)
- Use **Pr.811** to change the increment for the running speed monitor and speed setting monitor (r/min) from 1 r/min to 0.1 r/min.
- Changing the number of motor poles using **Pr.81 Number of motor poles** will change the **Pr.144** setting value.

Pr.37 setting value	Pr.144 setting value	Output frequency monitor	Set frequency monitor	Running speed monitor	Frequency setting parameter setting
0 (initial value)	0	0.01 Hz	0.01 Hz	1 r/min *1*2	0.01 Hz
	2 to 12	0.01 Hz	0.01 Hz	1 r/min *1*2	0.01 Hz
	102 to 112	1 r/min *1*2	1 r/min *1*2	1 r/min *1*2	1 r/min *1
1 to 9998	0	0.01 Hz	0.01 Hz	1 (machine speed) *1	0.01 Hz
	2 to 12	1 (machine speed) *1	1 (machine speed) *1	1 (machine speed) *1	1 (machine speed) *1
	102 to 112	0.01 Hz	0.01 Hz	1 r/min *1*2	0.01 Hz

*1 Conversion formula to the motor speed r/min
Frequency × 120 / number of motor poles (**Pr.144**)
Conversion formula to machine speed
Pr.37 × Frequency / **Pr.505**
For **Pr.144** in the above formula, the value is "**Pr.144** - 100" when "102 to 110" is set in **Pr.144**; and the value is "4" when **Pr.37**=0 and **Pr.144**=0.
*2 Use **Pr.811** to change the increment from 1 r/min to 0.1 r/min.

Output frequency detection

Pr.	GROUP	Name	Pr.	GROUP	Name
41	M441	Up-to-frequency sensitivity	42	M442	Output frequency detection
43	M443	Output frequency detection for reverse rotation	50	M444	Second output frequency detection
116	M445	Third output frequency detection	865	M446	Low speed detection
870	M400	Speed detection hysteresis			

The output frequency of the inverter is detected to output as an output signal.

- The **Pr.41** value can be adjusted within the range ±1% to ±100% considering the set frequency as 100%.
- This parameter can be used to check whether the set frequency has been reached, and provide signals such as the operation start signal for related equipment.

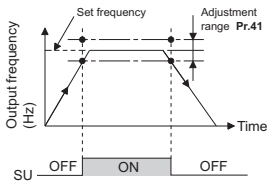

- Output frequency detection signal (FU, FB) is output when the output frequency reaches the **Pr.42** setting or higher.
  This function can be used for electromagnetic brake operation, open signal, etc.
- Frequency detection dedicated to reverse rotation can also be set by setting the detection frequency to **Pr.43**. This is useful for changing the timing of the electromagnetic brake for forward rotation (lifting) and reverse rotation (lowering) in operations such as a lift operation.
- When outputting a frequency detection signal separately from the FU (FB) signal, set the detection frequency in **Pr.50** or **Pr.116**. When the output frequency reaches the **Pr.50** setting or higher, the FU2 (FB2) signal is output (when it reaches the **Pr.116** setting or higher, the FU3 (FB3) signal is output).

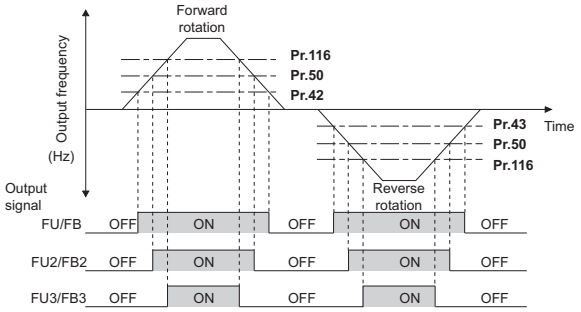

- During Real sensorless vector control and vector control, FU (FU2, FU3) signal is output when the output frequency reaches the specified speed, and FB (FB2, FB3) signal is output when the actual motor speed (estimated actual rotations per minute) reaches the specified speed.
  (Output timings of FU and FB signals are the same under V/F control, Advanced magnetic flux vector control, and encoder feedback control.)
- During Real sensorless vector control, vector control, and PM sensorless vector control, the LS signal is output when the output frequency drops to **Pr.865** or lower.
  During inverter operation, signals are output by the following conditions.

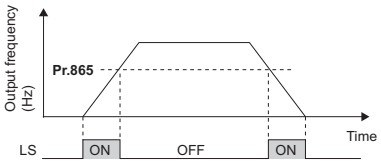

Pr. 44 to 45 Refer to the page on Pr.7

Pr. 46 Refer to the page on Pr.0

Pr. 47 Refer to the page on Pr.3

Pr. 48 to 49 Refer to the page on Pr.22

Pr. 50 Refer to the page on Pr.41

Pr. 51 Refer to the page on Pr.9

Monitor display selection

Pr.	GROUP	Name	Pr.	GROUP	Name
52	M100	Operation panel main monitor selection	54	M300	FM/CA terminal function selection
158	M301	AM terminal function selection	170	M020	Watt-hour meter clear
171	M030	Operation hour meter clear	268	M022	Monitor decimal digits selection
290	M044	Monitor negative output selection	563	M021	Energization time carrying-over times
564	M031	Operating time carrying-over times	774	M101	Operation panel monitor selection 1
775	M102	Operation panel monitor selection 2	776	M103	Operation panel monitor selection 3
891	M023	Cumulative power monitor digit shifted times	992	M104	Operation panel setting dial push monitor selection
1018	M045	Monitor with sign selection	1106	M050	Torque monitor filter
1107	M051	Running speed monitor filter	1108	M052	Excitation current monitor filter

Use **Pr.52**, **Pr.774** to **Pr.776**, **Pr.992** to select a monitored item to be displayed on the operation panel (FR-DU08) and parameter unit (FR-PU07).
Refer to the following table and set the monitor to be displayed. (The items with — are not available for monitoring. The circle in the display/output column denotes availability of the minus sign display/output.)

Monitored item	Unit	Pr.52, Pr.774 to Pr.776, Pr.992		Pr.54 (FM/CA) Pr.158 (AM) setting value	Terminal FM, CA, AM full-scale value	Minus (-) display /output *14
		DU	PU			
Output frequency/ Rotation speed*10	0.01 Hz *9	1/0/100		1*17	**Pr.55**	○*15
Output current*6*7*10	0.01 A/ 0.1 A *5	2/0/100		2	**Pr.56**	
Output voltage*6*10	0.1 V	3/0/100		3	200 V class: 400 V 400 V class: 800 V	
Fault or alarm indication	—	0/100		—	—	
Frequency setting value/ speed setting	0.01 Hz *9	5	*1	5*17	**Pr.55**	
Running speed	1 (r/min)	6	*1	6	Setting value of **Pr.55** converted by **Pr.37** and **Pr.144**.	○*15
Motor torque	0.1%	7	*1	7	**Pr.866**	○
Converter output voltage*6	0.1 V	8	*1	8	200 V class: 400 V 400 V class: 800 V	
Regenerative brake duty*13	0.1%	9	*1	9	Brake duty determined by **Pr.30** and **Pr.70**	
Electronic thermal O/L relay load factor	0.1%	10	*1	10	Electronic thermal O/L relay (100%)	
Output current peak value*6	0.01 A/ 0.1 A *5	11	*1	11	**Pr.56**	
Converter output voltage peak value*6	0.1 V	12	*1	12	200 V class: 400 V 400 V class: 800 V	
Input power	0.01 kW/ 0.1 kW *5	13	*1	13	Rated inverter power × 2	
Output power*7	0.01 kW/ 0.1 kW *5	14	*1	14	Rated inverter power × 2	

Monitored item	Unit	Pr.52, Pr.774 to Pr.776, Pr.992 DU	Pr.52, Pr.774 to Pr.776, Pr.992 PU	Pr.54 (FM/CA) Pr.158 (AM) setting value	Terminal FM, CA, AM full-scale value	Minus (-) display /output *14
Load meter	0.1%	17		17	**Pr.866**	
Motor excitation current*6	0.01 A/ 0.1 A *5	18		18	**Pr.56**	
Position pulse*8	—	19		—	—	
Cumulative energization time*2	1 h	20		—	—	
Reference voltage output	—	—		21	—	
Orientation status*8	1	22		—	—	
Actual operation time*2*3	1 h	23		—	—	
Motor load factor	0.1%	24		24	200%	
Cumulative power*6	0.01 kWh/ 0.1 kWh*4*5	25		—	—	
Position command	1	26		—	—	○
Position command (upper digits)	1	27		—	—	○
Current position	1	28		—	—	○
Current position (upper digits)	1	29		—	—	○
Droop pulse	1	30		—	—	○
Droop pulse (upper digits)	1	31		—	—	○
Torque command	0.1%	32		32	**Pr.866**	○
Torque current command	0.1%	33		33	**Pr.866**	○
Motor output	0.01 kW/ 0.1 kW *5	34		34	Rated motor capacity	
Feedback pulse*8	—	35		—	—	
Torque momitor (driving/ regenerative polarity switching)	0.1%	36		36	**Pr.866**	○
Trace status	1	38		—	—	
SSCNET III(/H) communication status*8	1	39		—	—	
PLC function user monitor 1	Increment set in SD1215	40		—	—	
PLC function user monitor 2		41		—	—	
PLC function user monitor 3		42		—	—	
Station number (RS-485 terminals)*18	1	43		—	—	
Station number (PU)	1	44		—	—	
Station number (CC-Link)	1	45		—	—	
Motor temperature*8*18	1°C	46		46	**Pr.751**	○
Energy saving effect	Changeable by parameter setting	50		50	Inverter capacity	
Cumulative energy saving		51		—	—	
PID set point	0.1%	52		52	100%	
PID measured value	0.1%	53		53	100%	
PID deviation	0.1%	54		54*11	100%	○
Input terminal status	—	55	*1	—	—	
Output terminal status	—		*1	—	—	
Option input terminal status*8	—	56	—	—	—	
Option output terminal status*8	—	57	—	—	—	
Option input terminal status 1 (for communication)*8	—	—*12		—*12	—	

Monitored item	Unit	Pr.52, Pr.774 to Pr.776, Pr.992 DU	Pr.52, Pr.774 to Pr.776, Pr.992 PU	Pr.54 (FM/CA) Pr.158 (AM) setting value	Terminal FM, CA, AM full-scale value	Minus (-) display /output *14
Option input terminal status 2 (for communication)*8	—	—*12		—*12	—	
Option output terminal status 1 (for communication)*8	—	—*12		—*12	—	
Motor thermal load factor	0.1%	61		61	Motor thermal activation level (100%)	
Inverter thermal load factor	0.1%	62		62	Inverter thermal activation level (100%)	
PTC thermistor resistance	0.01 kΩ	64		—	—	
PID measured value 2	0.1%	67		67	100%	
PLC function analog output	0.1%	—		70	100%	○
Cumulative pulse*8	—	71		—	—	○*16
Cumulative pulse overflow times*8	—	72		—	—	○*16
Cumulative pulse (control terminal option)*8	—	73		—	—	○*16
Cumulative pulse overflow times (control terminal option)*8	—	74		—	—	○*16
Multi-revolution counter*8	1	75		—	—	
32-bit cumulative power (lower 16 bits)	1 kWh	—*12		—*12	—	
32-bit cumulative power (upper 16 bits)	1 kWh	—*12		—*12	—	
32-bit cumulative power (lower 16 bits)	0.01 kWh/ 0.1 kWh *5	—*12		—*12	—	
32-bit cumulative power (upper 16 bits)	0.01 kWh/ 0.1 kWh *5	—*12		—*12	—	
Remote output value 1	0.1%	87		87	1000%	○
Remote output value 2	0.1%	88		88	1000%	
Remote output value 3	0.1%	89		89	1000%	
Remote output value 4	0.1%	90		90	1000%	
PID manipulated variable	0.1%	91		91*11	100%	○
Second PID set point	0.1%	92		92	100%	
Second PID measured value	0.1%	93		93	100%	
Second PID deviation	0.1%	94		94*11	100%	○
Second PID measured value 2	0.1%	95		95	100%	
Second PID manipulated variable	0.1%	96		96*11	100%	○
Dancer main speed setting	0.01 Hz	97		97	**Pr.55**	
Control circuit temperature	1°C	98		98	100°C	○

*1 To display the monitored items from the frequency setting value to the output terminal status on a parameter unit (FR-PU07), select "other monitor".
*2 The cumulative energization time and actual operation time are accumulated from 0 to 65535 hours, then cleared, and accumulated again from 0.
*3 The actual operation time does not increase if the cumulative running time before power OFF is less than an hour.
*4 When using the parameter unit (FR-PU07), "kW" is displayed
*5 Differs according to capacities. (FR-A820-03160(55K) or lower

and FR-A840-01800(55K)or lower/FR-A820-03800(75K) or higher and FR-A840-02160(75K) or higher)

*6 Since the voltage and current displays on the operation panel (FR-DU08) are shown in four digits, a monitor value of more than "9999" is displayed as "----".

*7 When the output current is less than the specified current level (5% of the inverter rated current), the output current is monitored as 0 A.Therefore, the monitored value of an output current and output power may be displayed as "0" when using a much smaller-capacity motor compared to the inverter or in other instances that cause the output current to fall below the specified value.

*8 Available when the option is connected.

*9 When **Pr.37**="1 to 9998" or **Pr.144**="2 to 12, 102 to 112", 1 increment is used. (Refer to **page 124**)

*10 The monitored values are retained even if an inverter fault occurs. Resetting will clear the retained values.

*11 Can be set for the AM (**Pr.158**) only.

*12 Can be set or monitored only via communication.

*13 The setting is available for the standard model only.

*14 Setting **Pr.290** ≠ 0 enables the display/output with a minus sign.

*15 Setting **Pr.1018** = 0 enables the display/output with a minus sign.

*16 Negative values are not displayed on the operation panel. The values "-1 to -32767" are displayed as "65535 to 32769" on the operation panel.

*17 The speed is not displayed on the FR-A842-P.

*18 Not available for the FR-A842-P.

- **Pr.774** sets the output frequency monitor, **Pr.775** sets the output current monitor, and **Pr.776** sets the monitor description to be displayed at the output voltage monitor position. When **Pr.774** to **Pr.776**="9999" (initial value), the **Pr.52** setting value is used. (For the monitor display sequence, refer to page **page 68**.)
- Digits in the cumulative power monitor can be shifted to the right by the number set in **Pr.891**.
- Writing "0" in **Pr.170** clears the cumulative power monitor.
- **Pr.563** allows the user to check how many times the cumulative energization time monitor has exceeded 65535 h. **Pr.564** allows the use to check how many times the actual operation time monitor has exceeded 65535 h .
- Writing "0" in **Pr.171** clears the actual operation time monitor.

Pr.268 setting	Description
9999 (initial value)	No function
0	When monitoring with the first or second decimal place (0.1 increments or 0.01 increments), the 0.1 decimal place or lower is dropped to display an integral value (1 increments). The monitor value equal to or smaller than 0.99 is displayed as 0.
1	When monitoring with the second decimal place (0.01 increments), the 0.01 decimal place is dropped and the monitor displays the first decimal place (0.1 increments). When monitoring with the first decimal place, the display will not change.

- When **Pr.52**="100", the set frequency is displayed during stop, and output frequency is displayed during running. (LED of Hz blinks during stop and is lit during operation.)

Pr.52	0	100	
Operating status	During running/ stop	During stop	Running
Output frequency	Output frequency	Set frequency	Output frequency
Output current	Output current		
Output voltage	Output voltage		
Fault or alarm indication	Fault or alarm indication		

- The monitored item to be displayed at the operation panel (FR-DU08)'s setting dial push can be selected with **Pr.992**.

Pr.992	0	100	
Operating status	During running/ stop	During stop	Running
Monitor displayed by the setting dial push	Set frequency (PU direct-in frequency)	Set frequency	Output frequency

- Depending on the **Pr.290** setting, negative output can be selected for terminal AM (analog voltage output), and display with a minus sign is enabled for the operation panel and a communication option.

Pr.290 setting	Terminal AM output	Operation panel display	Monitoring on the communication option
0 (initial value)	-	-	-
1	Output with a minus sign	-	-
2	-	Displayed with a minus sign	-
3	Output with a minus sign	Displayed with a minus sign	-
4	-	-	Displayed with a minus sign
5	Output with a minus sign	-	Displayed with a minus sign
6	-	Displayed with a minus sign	Displayed with a minus sign
7	Output with a minus sign	Displayed with a minus sign	Displayed with a minus sign

Reference for monitor value output from terminal FM/CA, AM

Pr.	GROUP	Name	Pr.	GROUP	Name
55	M040	Frequency monitoring reference	56	M041	Current monitoring reference
866	M042	Torque monitoring reference			

Full scales can be set for the values output from terminal FM/CA and AM.

Monitor*1	Reference parameter	Initial value
Frequency	Pr.55	FM type, 60 Hz CA type 50 Hz
Current	Pr.56	Inverter rated current
torque	Pr.866	150%

*1 For the monitored item names, refer to the page on **Pr.52**.

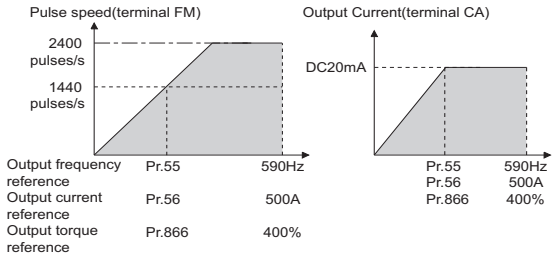

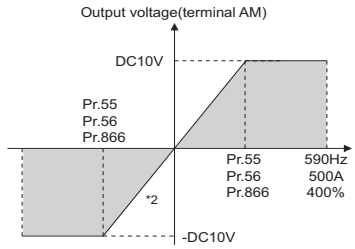

*2 Minus-sign output is enabled when **Pr.290 Monitor negative output selection** = "1 and 3".

Automatic restart after instantaneous power failure with an induction motor

V/F | Magnetic flux | Sensorless | Vector

Pr.	GROUP	Name	Pr.	GROUP	Name
57	A702	Restart coasting time	58	A703	Restart cushion time
162	A700	Automatic restart after instantaneous power failure selection	163	A704	First cushion time for restart
164	A705	First cushion voltage for restart	165	A710	Stall prevention operation level for restart
299	A701	Rotation direction detection selection at restarting	611	F003	Acceleration time at a restart

The inverter can be restarted without stopping the motor in the following conditions:

- When switching from commercial power supply operation over to inverter operation
- When an instantaneous power failure occurs during inverter operation
- When the motor is coasting at start

Pr.	Setting range	Description
162	0(initial value), 1000	Frequency search only performed at the first start
	1, 1001	Reduced voltage start only at the first start (no frequency search)
	2, 1002	Encoder detection frequency search
	3, 1003	Frequency search only performed at the first start (reduced impact restart)
	10, 1010	Frequency search at every start
	11, 1011	Reduced voltage start at every start (no frequency search)
	12, 1012	Encoder detection frequency search at every start
	13, 1013	Frequency search at every start (reduced impact restart)
299	0 (initial value)	Without rotation direction detection
	1	With rotation direction detection
	9999	When **Pr.78 Reverse rotation prevention selection** = "0", with rotation direction detection **Pr.78 Reverse rotation prevention selection** = "1, 2", without rotation direction detection
57	0	Coasting time differs according to the inverter capacity.*1
	0.1 to 30s	Set the waiting time for the inverter to perform a restart after the power lost by an instantaneous power failure restores.
	9999 (initial value)	No restart
58	0 to 60 s	Set the voltage cushion time for restart.
163	0 to 20 s	Set the voltage cushion time for restart. Set a value considering the load amount (moment of inertia, torque).
164	0 to 100%	
165	0 to 400%	Set the stall prevention level at restart considering the inverter rated current as 100%.
611	0 to 3600 s	Set the acceleration time that takes to reach **Pr.20 Acceleration/deceleration reference frequency** setting at a restart.
	9999 (initial value)	Normal acceleration time setting (settings like **Pr.7**) is applied as the acceleration time for restart.

*1 The coasting time when **Pr.57**="0" is as shown below. (When **Pr.162** is set to the initial value and the ND rating is selected.)
FR-A820-00105(1.5K) or lower and, FR-A840-00052(1.5K) or lower: 0.5s
FR-A820-00167(2.2K) to FR-A820-00490(7.5K) and
FR-A840-00083(2.2K) to FR-A840-00250(7.5K):1 s
FR-A820-00630(11K) to FR-A820-03160(55K) and
FR-A840-00310(11K) to FR-A840-01800(55K): 3.0 s
FR-A820-03800(75K) or higher and, FR-A840-02160(75K) or higher
: 5.0 s

<Connection diagram>

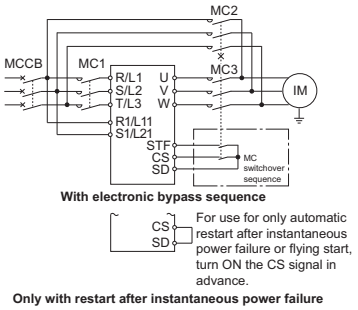

- **Pr.162**="0 (initial value), 3, 10, or 13", the motor speed is detected at power restoration to start the motor smoothly.
- During encoder feedback control with **Pr.162** = "2 or 12" or during vector control, the motor starts at power restoration based on the motor speed and rotation direction detected by the encoder. (This operation is available when a vector control compatible option is installed.)
- Setting **Pr.162** = "3, 13" will lead to better-absorbed impacts and smoother motor start (Reduced impact restart) than the **Pr.162** = "0, 10" setting does. (Offline auto tuning)
  Under Real sensorless vector control, the reduced impact restart is applied, independently of the **Pr.162** setting.
- The encoder also detects the rotation direction during reverse rotation so that the inverter can re-start smoothly. (**Pr.299 Rotation direction detection selection at restarting** to enable/disable the rotation direction detection)

V/F control, Advanced magnetic flux vector control

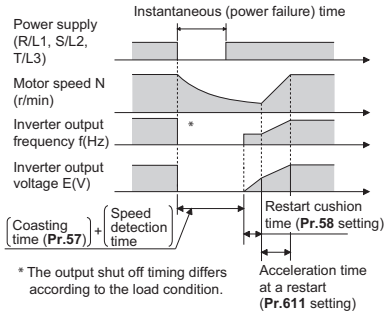

Real sensorless vector control

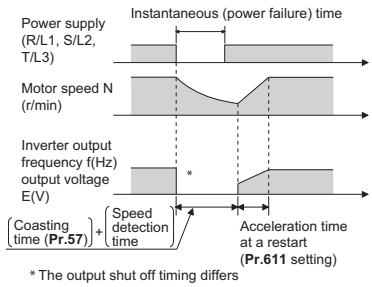

- When **Pr.162** = "1" or "11", automatic restart operation is performed in a reduced voltage system, where the voltage is gradually risen with the output frequency unchanged from prior to an instantaneous power failure independently of the coasting speed of the motor.
  During Real sensorless vector control, the output frequency and voltage before an instantaneous power failure are output. (The **Pr.58** setting is disabled.)

V/F control, Advanced magnetic flux vector control

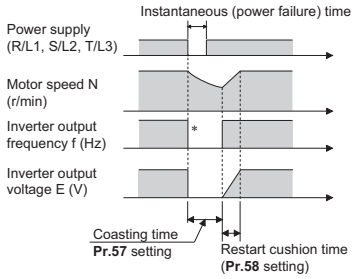

* The output shut off timing differs according to the load condition.

Automatic restart after instantaneous power failure with a PM motor PM

Pr.	GROUP	Name	Pr.	GROUP	Name
57	A702	Restart coasting time	162	A700	Automatic restart after instantaneous power failure selection
611	F003	Acceleration time at a restart			

While using an IPM motor MM-CF, the inverter can be restarted without stopping the motor.
By enabling the automatic restart after instantaneous power failure function in the following conditions, the motor can be restarted.

- When an instantaneous power failure occurs during inverter operation
- When the motor is coasting at start

Pr.	Setting range	Description
57	0	No waiting time
	0.1 to 30 s	Set the waiting time for the inverter to perform a restart after the power lost by an instantaneous power failure restores.
	9999 (initial value)	No restart
162	0 (initial value), 1, 2, 3, 1000, 1001, 1002, 1003	Frequency search only performed at the first start
	10, 11, 12, 13, 1010, 1011, 1012, 1013	Frequency search at every start
611	0 to 3600 s	Set the acceleration time that takes to reach **Pr.20 Acceleration/deceleration reference frequency** at a restart.
	9999 (initial value)	Standard acceleration time (for example, **Pr.7**) s applied as the acceleration time at restart.

◆ Selection for the automatic restart (Pr.162)

The motor speed is detected (frequency search) at power restoration to start the motor smoothly.
The encoder also detects the rotation direction during reverse rotation so that the inverter can re-start smoothly.

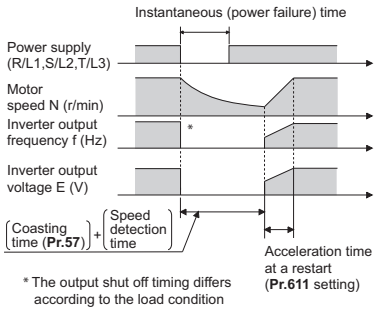

* The output shut off timing differs according to the load condition

Remote setting function

Pr.	GROUP	Name
59	F101	Remote function selection

Even if the operation panel is located away from the enclosure, contact signals can be used to perform continuous variable-speed operation, without using analog signals.

Pr.59 setting	Description		
	RH, RM, RL signal function	Frequency setting storage	Deceleration to the frequency lower than the set frequency
0 (initial value)	Multi-speed setting	-	Not available
1	Remote setting	With	
2	Remote setting	Not used	
3	Remote setting	Not used (Turning STF/STR OFF clears remotely set frequency.)	
11	Remote setting	With	Available
12	Remote setting	Not used	
13	Remote setting	Not used (Turning STF/STR OFF clears remotely set frequency.)	

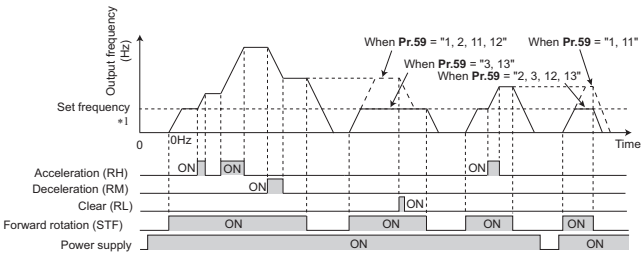

*1 External operation frequency (other than multi-speed) or PU running frequency

Energy saving control selection

V/F Magnetic flux

Pr.	GROUP	Name
60	G030	Energy saving control selection

Inverter will perform energy saving control automatically even when the detailed parameter settings are made.
It is appropriate for an application such as a fan or pump.

Pr.60 setting	Description
0(initial value)	Normal operation
4	Energy saving operation*1 With the energy saving operation, the inverter will automatically control the output voltage so the inverter output power during the constant-speed operation will become minimal. (Available during V/F control)
9	Optimum excitation control*1 The Optimum excitation control is a control method to decide the output voltage by controlling the excitation current so the efficiency of the motor is maximized. (Available during V/F control or Advanced magnetic flux vector control)

*1 Output current may increase slightly with the energy saving operation or the Optimum excitation control since the output voltage is controlled.

Automatic acceleration/deceleration

V/F Magnetic flux Sensorless Vector

Pr.	GROUP	Name	Pr.	GROUP	Name
61	F510	Reference current	62	F511	Reference value at acceleration
63	F512	Reference value at deceleration	64	F520	Starting frequency for elevator mode
292	F500 A110	Automatic acceleration/ deceleration	293	F513	Acceleration/ deceleration separate selection

The inverter can be operated with the auto-adjusted parameters.

- Without setting the acceleration/deceleration time or the V/F pattern, the inverter can be operated as if the appropriate value is set to each parameter.This function is useful for operating the inverter without setting detailed parameters.
- Even if automatic acceleration/deceleration has been selected, inputting the JOG signal, RT signal (second function selection), or X9 signal (third function selection) during an inverter stop will switch to the normal operation and give priority to JOG operation, second function selection or third function selection.
  After the motor is started by the automatic acceleration/ deceleration, none of JOG, RT, or X9 signal is accepted.

Pr.292 setting	Operation		Automatic setting Pr.
0 (initial value normal operation)	–		–
1 (shortest acceleration/ deceleration)	Without brake resistor or the brake unit	Set this parameter to accelerate/decelerate the motor at the shortest time. (Stall prevention operation level 150%)	Pr.7, Pr.8
11 (shortest acceleration/ deceleration)	With brake resistor, brake unit		
3 (optimum acceleration/ deceleration)	Optimal operation that fully uses the inverter's capability is performed.		Pr.0, Pr.7, Pr.8
5 (lift mode)	Stall prevention operation level 150%	The inverter output voltage is controlled so that enough torque is provided during power driving and regenerative driving.	Pr.0, Pr.13, Pr.19
6 (lift mode 2)	Stall prevention operation level 180%		
7 (Brake sequence mode 1)	With machine brake opening completion signal	In this operation mode, operation timing signals of the mechanical brake are output from the inverter, such as for lift application.	–
8 (Brake sequence mode 2)	Without machine brake opening completion signal		

- **Pr.61** to **Pr.63** can be used to change the reference current for the shortest acceleration/deceleration and the optimal acceleration/deceleration operation.
- Use **Pr.64** to set the starting frequency for the lift operation.
- Acceleration/deceleration times can be individually calculated. Such a setting can be enabled/disabled for the shortest acceleration/deceleration operation and the optimum acceleration/deceleration.

Pr.293 setting	Description
0 (initial value)	Both the acceleration and deceleration times are calculated.
1	Only the acceleration time is calculated.
2	Only the deceleration time is calculated.

Retry function

Pr.	GROUP	Name	Pr.	GROUP	Name
65	H300	Retry selection	67	H301	Number of retries at fault occurrence
68	H302	Retry waiting time	69	H303	Retry count display erase

This function allows the inverter to reset itself and restart at activation of the protective function (fault indication). The retry generating faults can be also selected.
(This function is not available for the FR-A842-P.)
When the automatic restart after instantaneous power failure function is selected (**Pr.57 Restart coasting time** ≠ 9999), the restart operation is also performed after a retry operation as well as after an instantaneous power failure.

- Using **Pr.65**, you can select the fault that will cause a retry. "●" indicates the faults selected for retry.

Retry target Fault indication	Pr.65 setting					
	0	1	2	3	4	5
E.OC1	●	●		●	●	●
E.OC2	●	●		●	●	
E.OC3	●	●		●	●	●
E.OV1	●		●	●	●	
E.OV2	●		●	●	●	
E.OV3	●		●	●	●	
E.THM	●					
E.THT	●					
E.IPF	●				●	
E.UVT	●				●	
E. BE	●				●	
E. GF	●				●	
E.OHT	●					
E.OLT	●				●	
E.OPT	●				●	
E.OP1	●				●	
E. PE	●				●	
E.MB1	●				●	
E.MB2	●				●	
E.MB3	●				●	
E.MB4	●				●	
E.MB5	●				●	
E.MB6	●				●	
E.MB7	●				●	
E.OS	●				●	
E.OSD	●				●	
E.PTC	●					
E.CDO	●				●	
E.SER	●				●	
E.USB	●				●	
E.ILF	●				●	
E.PID	●				●	
E.PCH	●				●	
E.SOT	●	●		●	●	●
E.LCI	●				●	
E.LUP	●				●	
E.LDN	●				●	
E.EHR	●				●	

- For **Pr.67**, set the number of retries at a fault occurrence.

Pr.67 setting	Description
0 (initial value)	No retry function
1 to 10	Set the number of retries at fault occurrence. A fault output is not provided during the retry operation.
101 to 110	Set the number of retries at fault occurrence. (The setting value minus 100 is the number of retries.) A fault output is provided during the retry operation.

- For **Pr.68**, set the waiting time (0.1 to 600 s) from a protective function activation to a retry.
- By reading **Pr.69**, the number of successful restarts made by retries can be obtained.

Pr.66 Refer to the page on Pr.22
Pr.67 to 69 Refer to the page on Pr.65
Pr.70 Refer to the page on Pr.30

Applicable motor

Pr.	GROUP	Name	Pr.	GROUP	Name
71	C100	Applied motor	450	C200	Second applied motor

Setting of the applied motor selects the thermal characteristic appropriate for the motor. When using a constant-torque or PM motor, the electronic thermal O/L relay is set according to the used motor.

Pr.71	Pr.450	Applied motor	Setting increment for motor constant	Operational characteristic of the electronic thermal O/L relay: Standard	Constant-torque	PM
0 (Pr.71 initial value)		Standard motor (such as SF-JR)	Ω,mΩ, mH,%, A,mV	○		
1		Constant-torque motor (SF-JRCA, etc.) SF-V5RU (except for 1500 r/min series)			○	
2	—	Standard motor (such as SF-JR) Adjustable 5 points V/F (Refer to **page 138**)		○		
20		Mitsubishi Electric standard motor (SF-JR 4P 1.5kW or lower)			○	
30		Vector control dedicated motor SF-V5RU (1500 r/min series) SF-THY			○	
40		Mitsubishi Electric high-efficiency motor SF-HR		○		
50		Mitsubishi Electric constant-torque motor SF-HRCA			○	
70		Mitsubishi Electric high-performance energy-saving motor SF-PR			○	
330*1		IPM motor MM-CF				○
8090		IPM motor (other than MM-CF)			○	
9090		SPM motor			○	
3, 4		Standard motor (such as SF-JR)	Internal data	○		
13, 14		Constant-torque motor (SF-JRCA, etc.) SF-V5RU (except for 1500 r/min series)			○	
23, 24		Mitsubishi Electric standard motor (other than SF-JR 4P 1.5kW)			○	
33, 34		Vector control dedicated motor SF-V5RU (1500 r/min series) SF-THY			○	
43, 44		Mitsubishi Electric high-efficiency motor SF-HR		○		
53, 54		Mitsubishi Electric constant-torque motor SF-HRCA			○	
73, 74		Mitsubishi Electric high-performance energy-saving motor SF-PR			○	
333, 334*1		IPM motor MM-CF				○
8093, 8094		IPM motor (other than MM-CF)			○	
9093, 9094		SPM motor			○	
5		Standard motor (Star connection)	Ω,mΩ,A	○		
15		Constant-torque motor (Star connection)			○	
6		Standard motor (Delta connection)		○		
16		Constant-torque motor (Delta connection)			○	
—	9999 (initial value)	No second applied motor				

*1 The setting is available for FR-A820-00630(11K) or lower.

- When initial values are set in **Pr.0** and **Pr.12**, the **Pr.0** and **Pr.12** settings are automatically changed by changing the **Pr.71** setting.

Carrier frequency and Soft-PWM selection

Pr.	GROUP	Name	Pr.	GROUP	Name
72	E600	PWM frequency selection	240	E601	Soft-PWM operation selection
260	E602	PWM frequency automatic switchover			

The motor sound can be changed.

Pr.	Setting range	Description
72*3	0 to 15*1	The PWM carrier frequency can be changed. The setting displayed is in [kHz]. Note that 0 indicates 0.7 kHz, 15 indicates 14.5 kHz, and 25 indicates 2.5 kHz. (When using an optional sine wave filter, set "25".)
	0 to 6, 25*2	
240	0	Soft-PWM disabled
	1 (initial value)	Soft-PWM enabled
260*3	0	PWM carrier frequency automatic reduction function disabled (for the LD, ND, or HD rating)
	1 (initial value)	PWM carrier frequency automatic reduction function enabled

*1 The setting range for the FR-A820-03160(55K) or lower and FR-A840-01800(55K) or lower.
*2 The setting range for the FR-A820-03800(75K) or higher and FR-A840-02160(75K) or higher.
*3 Not available for the FR-A842-P.

- Under Real sensorless vector control, vector control, and PM sensorless vector control, the following carrier frequencies are used. (For the control method and fast-response operation selection, refer to **Pr.800 Control method selection** refer to **page 135**

Pr.72 setting	Carrier frequency (kHz): Real sensorless vector control, vector control	PM sensorless vector control	fast-response operation selection
0 to 5	2	6*4	4
6, 7	6*5	6	
8, 9			
10 to 13	10*5	10	
14, 15	14*5	14	

*4 When low-speed range high-torque characteristic is disabled (**Pr.788**="0"), 2 kHz is used.
*5 In the low-speed range (3 Hz or lower) under Real sensorless vector control, the carrier frequency is automatically changed to 2 kHz. (For FR-A820-00490(7.5K) or lower and FR-A840-00250(7.5K) or lower)

- PWM carrier frequency automatic reduction function **(Pr.260)**
  Setting **Pr.260**="1 (initial value)" will enable the PWM carrier frequency auto-reduction function. If a heavy load is continuously applied while the inverter carrier frequency is set to 3 kHz or higher (**Pr.72** ≥ "3"), the carrier frequency is automatically reduced to prevent occurrence of the inverter overload trip (electronic thermal O/L relay function) (E.THT). The carrier frequency is reduced to as low as 2 kHz. (Motor noise increases, but not to the point of failure.)
- When the PWM carrier frequency automatic reduction function is used, the operation with the carrier frequency set to 3 kHz or higher (**Pr.72** ≥ "3") automatically reduces the carrier frequency for heavy-load operation as shown below.

Pr.260 setting	Pr.570 setting	Carrier frequency automatic reduction operation: FR-A820-04750(90K) or lower, FR-A840-02600(90K) or lower	FR-A840-03250(110K) or higher
1	0 (SLD), 1 (LD)	Continuous operation with the 85% or higher inverter rated current reduces the carrier frequency automatically.	
	2 (ND), 3 (HD)	Operation with the 150% or higher inverter rated current for the ND rating reduces the carrier frequency automatically.	Continuous operation with the 85% or higher inverter rated current reduces the carrier frequency automatically.
0	0 (SLD)	Continuous operation with the 85% or higher inverter rated current reduces the carrier frequency automatically.	
	1 (LD)	Without carrier frequency automatic reduction (Perform continuous operation with the carrier frequency set to 2 kHz or lower or with less than 85% of the rated inverter current.)	
	2 (ND), 3 (HD)	Without carrier frequency automatic reduction	Without carrier frequency automatic reduction (Perform continuous operation with the carrier frequency set to 2 kHz or lower or with less than 85% of the rated inverter current.)

- In the low-speed range (about 10 Hz or lower), the carrier frequency may be automatically lowered. Motor noise increases, but not to the point of failure.

Analog input selection

Pr.	GROUP	Name	Pr.	GROUP	Name
73	T000	Analog input selection	267	T001	Terminal 4 input selection
242	T021	Terminal 1 added compensation amount (terminal 2)	243	T041	Terminal 1 added compensation amount (terminal 4)
252	T050	Override bias	253	T051	Override gain

The analog input terminal specifications, the override function, and the function to switch forward/reverse rotation by the input signal polarity can be set.
Concerning terminals 2 and 4 used for analog input, the voltage input (0 to 5 V, 0 to 10 V) and current input (0 to 20 mA) are selectable. To input a voltage (0 to 5 V/ 0 to 10 V), set the voltage/current input switch OFF. To input a current (0 to 20 mA), set the voltage/current input switch ON and change the parameters **(Pr.73, Pr.267)**.
Addition compensation or fixed ratio analog compensation (override) with terminal 2 set to auxiliary input is applicable to the multi-speed operation or terminal 2/terminal 4 speed setting signal (main speed). (Bold frame indicates the main speed setting.)

Pr.73 setting	Terminal 2 input	Switch 1	Terminal 1 input	Compensation input terminal compensation method	Polarity reversible
0	0 to 10 V	OFF	0 to ±10 V	Terminal 1 Addition compensation	Not applied (state in which a negative polarity frequency command signal is not accepted)
1 (initial value)	0 to 5 V	OFF	0 to ±10 V		
2	0 to 10 V	OFF	0 to ±5 V		
3	0 to 5 V	OFF	0 to ±5 V		
4	0 to 10 V	OFF	0 to±10 V	Terminal 2 Override	
5	0 to 5 V	OFF	0 to ±5 V		
6	0 to 20 mA	ON	0 to ±10 V	Terminal 1 Addition compensation	
7	0 to 20 mA	ON	0 to ±5 V		
10	0 to 10 V	OFF	0 to ±10 V		Applied
11	0 to 5 V	OFF	0 to ±10 V		
12	0 to 10 V	OFF	0 to ±5 V		
13	0 to 5 V	OFF	0 to ±5 V		
14	0 to 10 V	OFF	0 to ±10 V	Terminal 2 Override	
15	0 to 5 V	OFF	0 to ±5 V		
16	0 to 20 mA	ON	0 to ±10 V	Terminal 1 Addition compensation	
17	0 to 20 mA	ON	0 to ±5 V		

- Turning ON the Terminal 4 input selection (AU) signal sets terminal 4 to the main speed.
- Set the **Pr.267** and voltage/current input switch setting according to the table below.

Pr.267 setting	Terminal 4 input	Switch 2
0 (initial value)	4 to 20 mA	ON
1	0 to 5 V	OFF
2	0 to 10 V	OFF

- Addition compensation **(Pr.242, Pr.243)**
  A compensation signal is addable to the main speed setting for such as synchronous or continuous speed control operation.

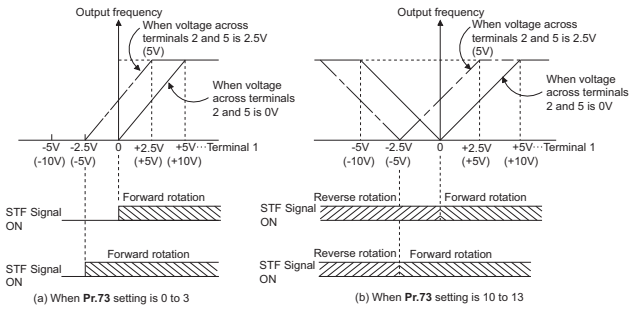

(a) When **Pr.73** setting is 0 to 3
(b) When **Pr.73** setting is 10 to 13

Terminal 1 (frequency setting auxiliary input) is added to terminal 2 or 4 main speed setting signal.

- Override function **(Pr.252, Pr.253)**
  When the override setting is selected, terminal 1 or 4 is set to the main speed setting, and terminal 2 is set to the override signal. (If the main speed of terminal 1 or 4 is not input, the compensation by terminal 2 is disabled.)

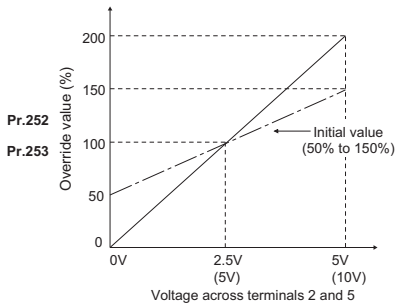

- When **Pr.868 (Pr.858)** = "4", the terminal 1 (terminal 4) values are set to the stall prevention operation level.

Analog input responsiveness and noise elimination

Pr.	GROUP	Name	Pr.	GROUP	Name
74	T002	Input filter time constant	822	T003	Speed setting filter 1
826	T004	Torque setting filter 1	832	T005	Speed setting filter 2
836	T006	Torque setting filter 2	849	T007	Analog input offset adjustment

The frequency command/torque command response level and stability are adjustable by using the analog input (terminals 1, 2, and 4) signal.

- **Pr.74** is effective to eliminate noise on the frequency setting circuit.
  Increase the filter time constant if steady operation cannot be performed due to noise, etc.
  A larger setting results in slower response. (The time constant can be between 0 and 8, which are about 2 ms to 1 s.)
- Set the primary delay filter time constant to the external speed command (analog input command) by using **Pr.822** or **Pr.832**. Set a larger time constant when delaying the speed command tracking or the analog input voltage is unstable.
- Set the primary delay filter time constant to the external torque command (analog input command) by using **Pr.826** or **Pr.836**. Set a larger time constant when delaying the torque command tracking or the analog input voltage is unstable.
- Set a value other than "9999" in **Pr.832** and **Pr.836**, which are enabled when the RT signal is ON.
- Setting **Pr.849** will offset the analog speed input (terminal2) and avoid the occurrence of a frequency command due to noise when the 0-speed command is given.
  The offset voltage is positive when 100% < **Pr.849** and negative when **Pr.849** < 100%.The detailed calculation of the offset voltage is as described below:
  Offset voltage [V] =
  Voltage at the time of 100% (5 V or 10 V*1) × (**Pr.849** - 100)/100
  *1 It depends on the **Pr.73** setting.

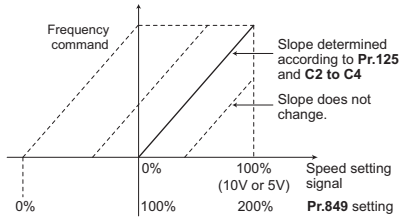

Reset selection/disconnected PU detection/PU stop selection

Pr.	GROUP	Name
75	E100	Reset selection
75	E101	Disconnected PU detection
75	E102	PU stop selection
75	E107	Reset limit
75	-	Reset selection/ disconnected PU detection/ PU stop selection

The reset input acceptance, disconnected PU (FR-DU08/FR-PU07) connector detection function and PU stop function can be selected.

Pr.75 setting	Reset selection	Disconnected PU detection	PU stop selection
0, 100	Reset input always enabled	Operation continues even when PU is disconnected.	Decelerates to a stop when STOP RESET is input in PU operation mode only.
1, 101	Reset input enabled only when protective function activated		
2, 102	Reset input always enabled	Inverter output shut off when PU disconnected.	
3, 103	Reset input enabled only when protective function activated		
14 (Initial value), 114	Reset input always enabled	Operation continues even when PU is disconnected.	Decelerates to a stop when STOP RESET is input in any of the PU, external and communication operation modes.
15, 115	Reset input enabled only when protective function activated		
16, 116	Reset input always enabled	Inverter output shut off when PU disconnected.	
17, 117	Reset input enabled only when protective function activated		

- Reset selection **(P.E100)**
  When **P.E100** = "1" or **Pr.75** = "1, 3, 15, 17, 100, 101, 103, 115, or 117" is set, reset (reset command via RES signal or communication) input is enabled only when the protective function is activated.
- Disconnected PU detection **(P.E101)**
  If the PU (FR-DU08/FR-PU07) is detected to be disconnected from the inverter for 1 s or longer while **P.E101** = "1" or **Pr.75** = "2, 3, 16, 17, 102, 103, 116, or 117", PU disconnection (E.PUE) is displayed and the inverter output is shut off.
- PU stop selection **(P.E102)**
  Stop can be performed by inputting STOP RESET from the PU in any of the operation modes of PU operation, External operation and network operation.
- Reset limit function **(P.E107)**
  When **Pr.75** = any of "100 to 103 and 114 to 117", if an electronic thermal O/L relay or an overcurrent protective function (E.THM, E.THT, E.OC[]) is activated while one of them has been already activated within 3 minutes, the inverter will not accept any reset command (RES signal, etc.) for about 3 minutes from the second activation.
  The reset limit function is available with the FR-A820-03800(75K) or higher and FR-A840-02160(75K) or higher.

Fault code output function

Pr.	GROUP	Name
76	M510	Fault code output selection

When a fault occurs, the corresponding data can be output as a 4-bit digital signal using via an open collector output terminal.
The fault code can be read using a programmable controller, etc., and countermeasures can be displayed on the HMI (Human Machine Interface), etc.

Pr.76 setting	Description
0 (initial value)	Without fault code output
1	With fault code output **(Refer to the table below.)**
2	Fault code is output only when a fault occurs. **(Refer to the table below.)**

- The fault codes that can be output are shown in the table below. (0: Output transistor OFF, 1: Output transistor ON)

Operation panel indication (FR-DU08)	Output terminal operation				Fault code
	SU	IPF	OL	FU	
Normal *1	0	0	0	0	0
E.OC1 E.OCT	0	0	0	1	1
E.OC2	0	0	1	0	2
E.OC3	0	0	1	1	3
E.OV1 to E.OV3 E.OVT	0	1	0	0	4
E.THM	0	1	0	1	5
E.THT	0	1	1	0	6
E.IPF	0	1	1	1	7
E.UVT	1	0	0	0	8
E.FIN	1	0	0	1	9
E.BE	1	0	1	0	A
E. GF	1	0	1	1	B
E.OHT	1	1	0	0	C
E.OLT	1	1	0	1	D
E.OPT E.OP1	1	1	1	0	E
Other than the above	1	1	1	1	F

*1 When **Pr.76** = "2", the terminal outputs the signal assigned by **Pr.191** to **Pr.194** in normal operation.

Parameter write selection

Pr.	GROUP	Name
77	E400	Parameter write selection

Whether to enable the writing to various parameters or not can be selected. Use this function to prevent parameter values from being rewritten by misoperation.

Pr.77 setting	Description
0 (initial value)	Writing is enabled only during stop.
1	Parameter writing is disabled.
2	Parameter writing is enabled in any operation mode regardless of the operation status. (Writing is disabled for some parameters.)

Reverse rotation prevention selection

Pr.	GROUP	Name
78	D020	Reverse rotation prevention selection

This function can prevent reverse rotation fault resulting from the incorrect input of the start signal.

Pr.78 setting	Description
0 (initial value)	Both forward and reverse rotations allowed
1	Reverse rotation disabled
2	Forward rotation disabled

Operation mode selection

Pr.	GROUP	Name	Pr.	GROUP	Name
79	D000	Operation mode selection	340	D001	Communication startup mode selection

Select the operation mode of the inverter.
The mode can be changed among operations using external signals (External operation), operation by operation panel (FR-DU08) or parameter unit (FR-PU07) (PU operation), combined operation of PU operation and External operation (External/PU combined operation), and Network operation (when RS-485 terminals or communication option is used).

Pr.79 setting	Description			LED display : OFF : ON
0 (initial value)	Use the External/PU switchover mode (PU/EXT) to switch between the PU and External operation mode. At power ON, the inverter is in the External operation mode.			PU operation mode PU EXT NET External operation mode PU EXT NET NET operation mode PU EXT NET
1	Operation mode	Frequency command	Start command	
	PU operation mode fixed	Operation panel (FR-DU08) and PU(FR-PU07) .	FWD or REV on PU (FR-DU08/FR-PU07)	PU operation mode PU EXT NET
2	External operation mode fixed. The operation can be performed by switching between the External and NET operation modes.	External signal input (terminal 2 and 4, JOG, multi-speed selection, etc.)	External signal input (terminal STF, STR)	External operation mode PU EXT NET NET operation mode PU EXT NET
3	External/PU combined operation mode 1	PU (FR-DU08/ FR-PU07) or external signal input (multi-speed setting, terminal 4)	External signal input (terminal STF, STR)	External/PU combined operation mode PU EXT NET
4	External/PU combined operation mode 2	External signal input (terminal 2 and 4, JOG, multi-speed selection, etc.)	FWD or REV on PU (FR-DU08/FR-PU07)	
6	Switchover mode Switching of PU, External, and NET operation modes can be performed during operation.			PU operation mode PU EXT NET External operation mode PU EXT NET NET operation mode PU EXT NET
7	External operation mode (PU operation interlock) X12 signal ON: Switchover to PU operation mode enabled (during External operation, output shutoff) X12 signal OFF: Switchover to PU operation mode disabled			

- Selecting the operation mode for power-ON **(Pr.340)**
  When power is switched ON or when power comes back ON after an instantaneous power failure, the inverter can be started up in the Network operation mode.
  After the inverter starts up in Network operation mode, parameter writing and operation can be commanded from programs.
  Set this mode when performing communication operation using the RS-485 terminals or a communication option.
  Use **Pr.79** and **Pr.340** to set the operation mode at power-ON (reset).

Pr.340 setting	Pr.79 setting	Operation mode at power-ON, at power restoration, or after a reset.	Operation mode switching
0 (initial value)	Follows the **Pr.79** setting.		
1, 2 *1	0	NET operation mode	Switching among the External, PU, and NET operation modes is enabled*2
	1	PU operation mode	PU operation mode fixed
	2	NET operation mode	Switching between the External and NET operation modes is enabled. Switching to PU operation mode is disabled
	3, 4	External/PU combined operation mode	Operation mode switching is disabled
	6	NET operation mode	Switching among the External, PU, and NET operation mode is enabled while running.
	7	X12 (MRS) signal ON NET operation mode	Switching among the External, PU, and NET operation modes is enabled *2
		X12 (MRS) signal OFF External operation mode	External operation mode fixed (Forcibly switched to External operation mode)
10, 12 *1	0	NET operation mode	Switching between the PU and NET operation mode is enabled *3
	1	PU operation mode	PU operation mode fixed
	2	NET operation mode	NET operation mode fixed
	3, 4	External/PU combined operation mode	Operation mode switching is disabled
	6	NET operation mode	Switching between the PU and NET operation mode is enabled while running*3
	7	External operation mode	External operation mode fixed (Forcibly switched to External operation mode)

*1 Use **Pr.340** = "2 or 12" setting to perform communication with the RS-485 terminals.
Even if an instantaneous power failure occurs while **Pr.57 Restart coasting time**≠ "9999" (with automatic restart after instantaneous power failure), the inverter continues operation at the condition before the instantaneous failure.

*2 The operation mode cannot be directly changed between the PU operation mode and Network operation mode.

*3 Switching between the PU and NET operation modes is available with the PU/EXT key on the operation panel (FR-DU08) and the X65 signal.

Changing the control method

Pr.	GROUP	Name	Pr.	GROUP	Name
71	C100	Applied motor	80	C101	Motor capacity
81	C102	Number of motor poles	83	C104	Rated motor voltage
84	C105	Rated motor frequency	89	G932	Speed control gain (Advanced magnetic flux vector)
450	C200	Second applied motor	451	G300	Second motor control method selection
453	C201	Second motor capacity	454	C202	Number of second motor poles
569	G942	Second motor speed control gain	800	G200	Control method selection
862	C242	Encoder option selection			

Select the inverter control method.

Pr.80 (Pr.453), Pr.81 (Pr.454)	Pr.71 (Pr.450)	Pr.800 setting *1	Pr.451 setting *1	Control method	Control mode
Other than 9999	Induction motor*3	0, 100		Vector control*2	Speed control
		1, 101			Torque control
		2, 102			Speed control/ torque control switchover
		3, 103			Position control
		4, 104			Speed control/ position control switchover
		5, 105			Position control/ torque control switchover
		6, 106			Torque control (variable-current limiter control)
		9, 109	-	Vector control test operation	
		10, 110		Real sensorless vector control	Speed control
		11, 111			Torque control
		12, 112			Speed control/ torque control switchover
		20 (initial value)	20	Advanced magnetic flux vector control	Speed control
		-	9999 (initial value)	Advanced magnetic flux vector control for the second motor	
	IPM motor (MM-CF) *4	9, 109	-	PM sensorless vector control test operation	
		13, 113		PM sensorless vector control	Position control*7
		14, 114			Speed control/ position control switchover*7
		20 (initial value), 110	20, 110		Speed control
	IPM/SPM motor (other than MM-CF)*5	9, 109	-	PM sensorless vector control test operation	
		20 (initial value), 110	20, 110	PM sensorless vector control	Speed control
		0 to 6, 100 to 106		Vector control (Refer to the Instruction Manual of the FR-A8APR.)	
	IPM/SPM motor	-	9999 (initial value)	The setting value of **Pr.800** is used for the second motor. (PM sensorless vector control (speed control) when **Pr.800**="9 or 109")	
9999*6 (initial value)	-	-		V/F control	

*1 The setting values of 100 and above are used when the fast-response operation is selected.
*2 A vector control compatible option is required.
*3 For induction motors, the operation for the setting of **Pr.800 (Pr.451)** = "10 or 110", speed control under Real sensorless vector control, is performed when **Pr.800 (Pr.451)** = "13, 14, 113, or 114".
*4 For IPM motors (MM-CF), the operation for the setting of **Pr.800 (Pr.451)** = "20 or 110", speed control under PM sensorless vector control, is performed when a value other than "9, 13, 14, 109, 113, 114, or 9999" is set in **Pr.800 (Pr.451)**.
*5 For IPM/SPM motors (other than MM-CF), the operation for the setting of **Pr.800 (Pr.451)** = "20 or 110", speed control under PM sensorless vector control, is performed when a value other than "9, 109, or 9999" is set in **Pr.800 (Pr.451)**.
*6 V/F control when **Pr.80** or **Pr.81** is "9999", regardless of the **Pr.800** setting. When **Pr.71** is set to the IPM motor MM-CF, PM sensorless vector control is enabled even if **Pr.80** ≠ "9999" or **Pr.81** = "9999".
*7 Setting **Pr.788 (Pr.747)Low speed range torque characteristic selection** = "0" (lLow-speed range high-torque characteristic disabled) selects speed control.

- Set **Pr.89 (Pr.569)** to make adjustments to keep the motor speed constant during variable load operation under Advanced magnetic flux vector control.
- The second motor control method can also be selected by the RT signal.
- The **Pr.22** function changes according to the **Pr.800** setting (stall prevention operation level/torque limit level).
- Setting **Pr.800 (Pr.451)** = "any of 100 to 105 or 109 to 114" selects the fast-response operation. The fast-response operation is available during vector control, Real sensorless vector control, and PM sensorless vector control.
  (During fast-response operation, the carrier frequency is always 4 kHz. During fast-response operation, continuous operation with 100% inverter rated current is not possible. (E.THT is likely to occur.))
- Using the FR-A8TP together with the FR-A8AP/FR-A8AL/FR-A8APR enables vector control by switching between two encoder-equipped motors.

Offline auto tuning

Pr.	GROUP	Name	Pr.	GROUP	Name
82	C125	Motor excitation current	83	C104	Rated motor voltage
84	C105	Rated motor frequency	90	C120	Motor constant (R1)
91	C121	Motor constant (R2)	92	C122	Motor constant (L1)/ d-axis inductance (Ld)
93	C123	Motor constant (L2)/ q-axis inductance (Lq)	94	C124	Motor constant (X)
96	C110	Auto tuning setting/ status	455	C225	Second motor excitation current
456	C204	Rated second motor voltage	457	C205	Rated second motor frequency
458	C220	Second motor constant (R1)	459	C221	Second motor constant (R2)
460	C222	Second motor constant (L1) / d-axis inductance (Ld)	461	C223	Second motor constant (L2) / q-axis inductance (Lq)
462	C224	Second motor constant (X)	463	C210	Second motor auto tuning setting/status
859	C126	Torque current/Rated PM motor current	860	C226	Second motor torque current/Rated PM motor current
9	C103	Electronic thermal O/ L relay	51	C203	Second electronic thermal O/L relay
71	C100	Applied motor	80	C101	Motor capacity
81	C102	Number of motor poles	298	A711	Frequency search gain
450	C200	Second applied motor	453	C201	Second motor capacity
454	C202	Number of second motor poles	560	A712	Second frequency search gain
684	C000	Tuning data unit switchover	702	C106	Maximum motor frequency
706	C130	Induced voltage constant (phi f)	707	C107	Motor inertia (integer)
711	C131	Motor Ld decay ratio	712	C132	Motor Lq decay ratio
717	C182	Starting resistance tuning compensation	721	C185	Starting magnetic pole position detection pulse width
724	C108	Motor inertia (exponent)	725	C133	Motor protection current level
738	C230	Second motor induced voltage constant (phi f)	739	C231	Second motor Ld decay ratio
740	C232	Second motor Lq decay ratio	741	C282	Second starting resistance tuning compensation
742	C285	Second motor magnetic pole detection pulse width	743	C206	Second motor maximum frequency
744	C207	Second motor inertia (integer)	745	C208	Second motor inertia (exponent)
746	C233	Second motor protection current level	1002	C150	Lq tuning target current adjustment coefficient
1412	C135	Motor induced voltage constant (phi f) exponent	1413	C235	Second motor induced voltage constant (phi f) exponent

Offline auto tuning operation can be executed to automatically calculate the motor constant under Advanced magnetic flux vector control, Real sensorless vector control, vector control, or PM sensorless vector control.
Offline tuning is necessary under Real sensorless vector control. Also, when the automatic restart after instantaneous power failure or flying start function is used under V/F control or with an IPM motor MM-CF, offline auto tuning improves the precision of the frequency search for motor speed detection.

Pr. 96 setting	Description
0 (initial value)	No offline auto tuning
1 *1	Performs offline auto tuning without rotating the motor
101 *1	Performs offline auto tuning by rotating the motor
11 *2	Performs offline auto tuning without rotating the motor (V/F control, PM sensorless vector control (IPM motor MM-CF)).

*1 For Advanced magnetic flux vector control, Real sensorless vector control and vector control
*2 For V/F control and PM sensorless vector control

- The offline tuning data (motor constants) can be copied to another inverter with the operation panel (FR-DU08).
- Even if a motor other than Mitsubishi Electric standard motors (SF-JR 0.4 kW or higher), high-efficiency motors (SF-HR 0.4 kW or higher), Mitsubishi Electric constant-torque motors (SF-JRCA 4P, SF-HRCA 0.4 kW to 55 kW), Mitsubishi Electric high-performance energy-saving motor SF-PR, or Mitsubishi Electric vector-dedicated motors (SF-V5RU (1500 r/min series)), such as other manufacturers' induction motors, SF-JRC, SF-TH, etc., is used, or when the wiring length is long (approx. 30 m or longer), an inductive motor can run with the optimum operation characteristics by using the offline auto tuning function.
- The offline auto tuning enables the operation with SPM motors and IPM motors other than MM-CF when using the PM motor. When using a PM motor other than the IPM motor MM-CF series, offline auto tuning must be performed.
- When using an induction motor, the motor rotation can be locked (**Pr.96** = "1, 11") or unlocked (**Pr.96** = "101").
  The tuning is more accurate when the motor can rotate (unlocked).
- Requirements for offline auto tuning
  - A motor is connected.
  - For the motor capacity, the rated motor current should be equal to or less than the inverter rated current. (It must be 0.4 kW or higher.)
    Using a motor with the rated current substantially lower than the inverter rated current will cause torque ripples, etc. and degrade the speed and orque accuracies. As a reference, select the motor with the rated motor current that is about 40% or higher of the inverter rated current.
  - The highest frequency is 400 Hz.
  - The target motor is other than a high-slip motor, a high-speed motor, or a special motor.
- When using an induction motor, check the following points if **Pr.96 (Pr.463)** = "101" (Perform offline auto tuning by rotating the motor) is selected.
  - Torque is not sufficient during tuning.
  - The motor can be rotated up to the frequency close to the motor rated frequency (**Pr.84** setting value).
  - The brake is released.
- The motor may rotate slightly even if **Pr.96 (Pr.463)** = "1, 11" (performs tuning without rotating the motor) is selected. Fix the motor securely with a mechanical brake, or before tuning, make sure that it is safe even if the motor rotates.
  Make sure to perform the above especially in vertical lift applications.
  Note that if the motor runs slightly, tuning performance is unaffected.

Excitation current low-speed scaling factor Magnetic flux Sensorless

Pr.	GROUP	Name	Pr.	GROUP	Name
85	G201	Excitation current break point	86	G202	Excitation current low-speed scaling factor
617	G080	Reverse rotation excitation current low-speed scaling factor	565	G301	Second motor excitation current break point
566	G302	Second motor excitation current low-speed scaling factor	14	G003	Load pattern selection

Under Advanced magnetic flux vector control or Real sensorless vector control, the excitation current scaling factor in the low-speed range can be adjusted.

Pr.	Setting range	Description	
14	0 (initial value)	Excitation current low-speed scaling factor: **Pr.86**	For constant-torque load*1
	1		For variable-torque load*1
	2		For constant-torque lift (boost at reverse rotation: 0%)*1
	3		For constant-torque lift (boost at forward rotation: 0%)*1
	4		RT signal ON...for constant-torque load RT signal OFF...for constant-torque lift (boost at reverse rotation: 0%)*1
	5		RT signal ON...for constant-torque load RT signal OFF...for constant-torque lift (boost at forward rotation: 0%)*1
	12*2	Forward rotation excitation current low-speed scaling factor: **Pr.86** Reverse rotation excitation current low-speed scaling factor: **Pr.617**	
	13*2	Forward rotation excitation current low-speed scaling factor: **Pr.617** Reverse rotation excitation current low-speed scaling factor: **Pr.86**	
	14*2	Forward rotation excitation current low-speed scaling factor: **Pr.86** Reverse rotation excitation current low-speed scaling factor: **Pr.617** (X17-OFF), **Pr.86** (X17 signal-ON)	
	15*2	Forward rotation excitation current low-speed scaling factor: **Pr.617** (X17-OFF), **Pr.86** (X17 signal-ON) Reverse rotation excitation current low-speed scaling factor: **Pr.86**	
85	0 to 400 Hz	Set the frequency at which increased excitation is started.	
	9999 (initial value)	SF-PR/SF-HR/SF-HRCA motor: The predetermined frequency is applied. Motor other than the above: 10 Hz is applied.	
86	0 to 300%	Set an excitation current scaling factor at 0 Hz.	
	9999 (initial value)	SF-PR/SF-HR/SF-HRCA motor: The predetermined scaling factor is applied. Motor other than the above: 130% is applied.	
617	0 to 300%	Set an excitation current scaling factor when different excitation current scaling factors are used for forward and reverse rotation.	
	9999 (initial value)	SF-PR/SF-HR/SF-HRCA motor: The predetermined scaling factor is applied. Motor other than the above: 130% is applied.	
565	0 to 400 Hz	Set an excitation current break point when the RT signal is ON.	
	9999 (initial value)	SF-PR/SF-HR/SF-HRCA motor: The predetermined frequency is applied. Motor other than the above: 10 Hz is applied.	

Pr.	Setting range	Description
566	0 to 300%	Set an excitation current low-speed scaling factor when the RT signal is ON.
	9999 (initial value)	SF-PR/SF-HR/SF-HRCA motor: The predetermined scaling factor is applied. Motor other than the above: 130% is applied.

*1 The setting is applied to the operation under V/F control.
*2 The setting is valid only under Advanced magnetic flux vector control or Real sensorless vector control. When **Pr.14** = "12 to 15" and V/F control is selected, the operation is the same as the one for constant-torque load (**Pr.14** = "0").

Pr. 89 Refer to the page on Pr.80.

Online auto tuning

Magnetic flux Sensorless Vector

Pr.	GROUP	Name	Pr.	GROUP	Name
95	C111	Online auto tuning selection	574	C211	Second motor online auto tuning

If online auto tuning is selected, favorable torque accuracy is retained by adjusting temperature even when the resistance value varies due to increase in the motor temperature.
When vector control is used, select the magnetic flux observer.

Pr.95	Pr.574	Description
0 (initial value)		Do not perform online auto tuning
1		Perform online auto tuning at startup
2		Magnetic flux observer (tuning always)

- Perform offline auto tuning before performing online auto tuning at startup.
- When performing the online auto tuning at start for a lift, consider utilization of a brake sequence function for the brake opening timing at a start or tuning using the external terminal. The tuning is completed in approximately 500 ms at the maximum after the start. Not enough torque may be provided during that period. Caution is required to prevent the object from dropping.
- Offline auto tuning is not necessary if selecting magnetic flux observer for the SF-V5RU, SF-JR (with encoder), SF-HR (with encoder), SF-JRCA (with encoder) or SF-HRCA (with encoder). (However, when the wiring length is long (30 m or longer as a reference), perform offline auto tuning so that the resistance for the wiring length can be reflected to the control.)

Pr. 96 Refer to the page on Pr.82.

Adjustable 5 points V/F Magnetic flux

Pr.	GROUP	Name	Pr.	GROUP	Name
71	C100	Applied motor	100	G040	V/F1 (first frequency)
101	G041	V/F1 (first frequency voltage)	102	G042	V/F2 (second frequency)
103	G043	V/F2 (second frequency voltage)	104	G044	V/F3 (third frequency)
105	G045	V/F3 (third frequency voltage)	106	G046	V/F4 (fourth frequency)
107	G047	V/F4 (fourth frequency voltage)	108	G048	V/F5 (fifth frequency)
109	G049	V/F5 (fifth frequency voltage)			

By setting a desired V/F characteristic from the start up to the base frequency or base voltage with the V/F control (frequency voltage/ frequency), a dedicated V/F pattern can be generated.
Optimal V/F patterns that match the torque characteristics of the facility can be set.

- Set **Pr.71** = "2" and set a voltage and frequency in **Pr.100 to Pr.109**.
- Read only error (Er. 1) is generated when the frequency value for each point is the same. Also, set the frequency and voltage within the range of **Pr.3 Base frequency** and **Pr.19 Base frequency voltage**.

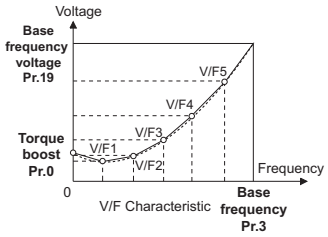

V/F Characteristic

- At the time of **Pr.19 Base frequency voltage** = "8888, 9999", setting of **Pr.71** = "2" cannot be made. When setting **Pr.71** = "2", set the rated voltage value in **Pr.19**.

Pr. 110, 111 Refer to the page on Pr.7.
Pr. 112 Refer to the page on Pr.0.
Pr. 113 Refer to the page on Pr.3.
Pr. 114, 115 Refer to the page on Pr.22.
Pr. 116 Refer to the page on Pr.41.

Initial settings for communication

Pr.	GROUP	Name	Pr.	GROUP	Name
117	N020	PU communication station number	118	N021	PU communication speed
119	N022	PU communication data length	119	N023	PU communication stop bit length
119	-	PU communication stop bit length / data length	120	N024	PU communication parity check
121	N025	PU communication retry count	122	N026	PU communication check time interval
123	N027	PU communication waiting time setting	124	N028	PU communication CR/LF selection
331	N030	RS-485 communication station number	332	N031	RS-485 communication speed
333	N032	RS-485 communication data length	333	N033	RS-485 communication stop bit length
333	-	RS-485 communication stop bit length / data length	334	N034	RS-485 communication parity check selection
335	N035	RS-485 communication retry count	336	N036	RS-485 communication check time interval
337	N037	RS-485 communication waiting time setting	341	N038	RS-485 communication CR/LF selection
342	N001	Communication EEPROM write selection	343	N080	Communication error count
349	N010	Communication reset selection	349	N240	Ready bit status selection
349	-	Communication reset selection/Ready bit status selection/ Reset selection when inverter errors cleared	434	N110	Network number (CC-Link IE)
434	N700	IP address 1	435	N111	Station number (CC-Link IE)
435	N701	IP address 2	436	N702	IP address 3
437	N703	IP address 4	438	N710	Sub-network mask 1
439	N711	Sub-network mask 2	440	N712	Sub-network mask 3
441	N713	Sub-network mask 4	500	N011	Communication error execution waiting time
501	N012	Communication error occurrence count display	502	N013	Stop mode selection at communication error
539	N002	MODBUS RTU communication check time interval	541	N100	Frequency command sign selection
544	N103	CC-Link extended setting	549	N000	Protocol selection
779	N014	Operation frequency during communication error	1434	N600	Ethernet IP address 1
1435	N601	Ethernet IP address 2	1436	N602	Ethernet IP address 3
1437	N603	Ethernet IP address 4	1438	N610	Subnet mask 1
1439	N611	Subnet mask 2	1440	N612	Subnet mask 3
1441	N613	Subnet mask 4	1427	N630	Ethernet function selection 1
1428	N631	Ethernet function selection 2	1429	N632	Ethernet function selection 3
1426	N641	Link speed and duplex mode selection	1455	N642	Keepalive time
1431	N643	Ethernet signal loss detection function selection	1432	N644	Ethernet communication check time interval
1424	N650	Ethernet communication network number	1425	N651	Ethernet communication station number

Pr.	GROUP	Name	Pr.	GROUP	Name
1442	N660 N760	Ethernet IP filter address 1	1443	N661 N761	Ethernet IP filter address 2
1444	N662 N762	Ethernet IP filter address 3	1445	N663 N763	Ethernet IP filter address 4
1446	N664 N764	Ethernet IP filter address 2 range specification	1447	N665 N765	Ethernet IP filter address 3 range specification
1448	N666 N766	Ethernet IP filter address 4 range specification	1449	N670	Ethernet command source selection IP address 1
1450	N671	Ethernet command source selection IP address 2	1451	N672	Ethernet command source selection IP address 3
1452	N673	Ethernet command source selection IP address 4	1453	N674	Ethernet command source selection IP address 3 range specification
1454	N675	Ethernet command source selection IP address 4 range specification	1459	N746	Clock source selection

Set the action when the inverter is performing operation via communication.

◆ Initial settings and specifications of RS-485 communication (Pr.117 to Pr.124, Pr.331 to Pr.337, Pr.341)

Use the following parameters to perform required settings for the RS-485 communication between the inverter and a personal computer. (Setting **Pr.331 to Pr.337**, **Pr.341**, **Pr.343**, **Pr.539**, or **Pr.549** is not available for the FR-A800-E.)

- There are two types of communication, communication using the inverter's PU connector and communication using the RS-485 terminals.
- Parameter setting, monitoring, etc. can be performed using the Mitsubishi inverter protocol or MODBUS RTU communication protocol.
- To establish communication between the computer and inverter, setting of the communication specifications must be made to the inverter in advance.
- Data communication cannot be established if the initial settings are not made or if there is any setting error.

Pr.	Setting range	Description	
117 331	0 to 31 (0 to 247)*1	Specify the inverter station number. Set the inverter station numbers when two or more inverters are connected to one personal computer.	
118 332	48, 96, 192, 384, 576, 768, 1152 (3, 6, 12, 24)*2	Set the communication speed. The setting value × 100 equals the communication speed. For example, if 192 is set, the communication speed is 19200 bps.	
E022 N032	0 (initial value)	Data length 8 bits	
	1	Data length 7 bits	
E023 N033	0	Stop bit length 1 bit	
	1 (initial value)	Stop bit length 2 bit	
119 333		**Stop bit length**	**Data length**
	0	1 bit	8 bits
	1 (initial value)	2 bits	
	10	1 bit	7 bits
	11	2 bits	
120 334	0	Without parity check	
	1	With odd parity check	
	2 (initial value)	With even parity check	
121 335	0 to 10	Set the permissible number of retries for unsuccessful data reception. If the number of consecutive errors exceeds the permissible value, the inverter will trip.	
	9999	If a communication error occurs, the inverter will not trip.	
122 336	0	No PU connector communication **(Pr.122)** Communication is available using the RS-485 terminals, but the inverter trips in the NET operation mode. **(Pr.336)**	
	0.1 to 999.8 s	Set the interval of the communication check (signal loss detection) time. If a no-communication state persists for longer than the permissible time, the inverter will trip.	
	9999 (initial value)	No communication check (signal loss detection)	
123 337	0 to 150 ms	Set the waiting time between data transmission to the inverter and the response.	
	9999 (initial value)	Set with communication data.	
124 341	0	Without CR/LF	
	1 (initial value)	With CR	
	2	With CR/LF	

*1 When communication is made from the RS-485 terminal using the MODBUS RTU protocol, the setting range in parentheses is applied to **Pr.331**.

*2 Values in parentheses are added to the **Pr.332** setting range.

◆ Communication EEPROM write selection (Pr.342)

When parameter write is performed via communication, the parameters storage device can be changed from EEPROM + RAM to RAM only. If parameter settings are changed frequently, set "1" in **Pr.342**.

◆ Operation selection at a communication error (Pr.502, Pr.779)

You can select the inverter's operation when a communication error occurs during communication other than the one through the PU connector. The operation is active under the Network operation mode.

Pr.	Setting range	At fault occurrence	At fault removal
502	0 (initial value)	Coasts to stop E.SER display *1 ALM signal output	Stays stopped (E.SER display *1)
	1, 11	Deceleration stop E.SER display after stop *1 ALM signal output after stop	Stays stopped (E.SER display *1)
	2, 12	Deceleration stop E.SER display after stop *1	Automatic restart
	3	Operation continued at the set frequency of **Pr.779** Normal indication	Normal operation
	4	Operation continued at the set frequency of **Pr.779** "CF" indication	
779	0 to 590 Hz	Set the frequency to be run at a communication error occurrence.	
	9999 (initial value)	The motor runs at the frequency used before the communication error.	

*1 The "E.EHR" indication appears during Ethernet communication (for the FR-A800-E only). If in communication by the communication option, E.OP1 is displayed.

◆ MODBUS RTU communication specification (Pr.343, Pr.539, Pr.549)

The MODBUS RTU protocol is valid only in communication from the RS-485 terminals. (The setting is not available for the FR-A800-E.)

Pr.	Setting range	Description	
N033	0	Stop bit length 1 bit	Valid when **Pr.N034 (Pr.334)** = "0"
	1 (initial value)	Stop bit length 2 bits	
333	0	Stop bit length 1 bit	Valid when **Pr.334** = "0"
	1 (initial value)	Stop bit length 2 bits	
	10	Stop bit length 1 bit	
	11	Stop bit length 2 bits	
334	0	Without parity check The stop bit length is selectable between 1 bit and 2 bits (according to **Pr.333**).	
	1	With parity check at odd numbers Stop bit length 1 bit	
	2 (initial value)	With parity check at even numbers Stop bit length 1 bit	
343	-	Displays the communication error count during MODBUS RTU communication. Read-only.	
539	0	MODBUS RTU communication, but the inverter trips in the NET operation mode.	
	0.1 to 999.8 s	Set the interval of the communication check (signal loss detection) time. (the same specifications as **Pr.122**)	
	9999 (initial value)	No communication check (signal loss detection)	
549	0 (initial value)	Mitsubishi inverter protocol (computer link)	
	1	MODBUS RTU protocol	

◆ Initial settings and specifications of Ethernet communication (FR-A800-E)

Use the following parameters to perform required settings for Ethernet communication between the inverter and other devices.

Pr.	Setting range	Description	
1434	0 to 255	Enter the IP address of the inverter to be connected to Ethernet.	
1435			
1436			
1437			
1438	0 to 255	Enter the subnet mask of the network to which the inverter belongs.	
1439			
1440			
1441			
1427	502, 5000 to 5002, 5006 to 5008, 5010 to 5013, 9999, 45237, 61450	Set the application, protocol, etc.	
1428			
1429			
1426	0 to 4	Set the communication speed and the communication mode (full-duplex/half-duplex).	
1455	1 to 7200 s	When no response is returned for an alive check message (KeepAlive ACK) for the time (s) set in **Pr.1455** multiplied by 4 elapsed, the connection will be forced to be closed.	
1431	0 (initial value)	Signal loss detection disabled.	Set the availability of the signal loss detection and select the action when Ethernet communication is interrupted by physical factors.
	1	A warning (EHR) is output for a signal loss.	
	2	A warning (EHR) and the Alarm (LF) signal are output for a signal loss.	
	3	A protective function (E.EHR) is activated for a signal loss.	
1432	0	Ethernet communication is available, but the inverter trips in the NET operation mode.	
	0.1 to 999.8 s	Set the interval of the communication check (signal loss detection) time for all devices with IP addresses in the range specified for Ethernet command source selection (**Pr.1449 to Pr.1454**). If a no-communication state persists for the permissible time or longer, the inverter will trip.	
	9999 (initial value)	No communication check (signal loss detection)	
1424	1 to 239	Enter the network number.	
1425	1 to 120	Enter the station number.	
1442	0 to 255	Set the range of connectable IP addresses for the network devices. (When **Pr.1442 to Pr.1445** = "0 (initial value)", the function is invalid.)	
1443			
1444			
1445			
1446	0 to 255, 9999		
1447			
1448			
1449	0 to 255	Set the range of IP addresses to limit the network devices that can be used as a command source during Ethernet communication (with MODBUS/TCP or CC-Link IE Field Network Basic). When **Pr.1449 to Pr.1452** = "0 (initial value)", no IP address is specified for sending commands through the Ethernet network. In this case, operation through the Ethernet network (MODBUS/TCP or CC-Link IE Field Network Basic) is not available. When four or more clients attempt a connection to the inverter during MODBUS/TCP communication, the connection attempted from outside of the IP address range set for Ethernet command source selection may be forced to be closed.	
1450			
1451			
1452			
1453	0 to 255, 9999		
1454			

◆ CC-Link IE Field Network Basic function setting (FR-A800-E)

The CC-Link IE Field Network Basic enables CC-Link IE communication using the general-purpose Ethernet-based technology. The CC-Link IE Field Network Basic is suited to small-scale equipment for which high-speed control is not necessary, and can coexist with the standard Ethernet TCP/IP (HTTP, FTP, etc.). (**Pr.544** can be set only when the FR-A800-E is used or a compatible plug-in option is installed.)

Pr.	Setting range	Description
541	0 (initial value)	Frequency command without sign
	1	Frequency command with sign
544	0 (initial value), 1, 12, 14, 18, 24, 28, 100, 112, 114, 118, 128	The function of the remote registers can be extended when the CC-Link IE Field Network Basic is used.

◆ CC-Link IE Field Network function setting (FR-A800-GF)

Use the following parameters to perform required settings for CC-Link IE Field Network communication between the inverter and other stations. (**Pr.349**, **Pr.500**, and **Pr.501** can be set only when the FR-A800-GF inverter is used or when a compatible plug-in option is installed to the FR-A800 inverter.)

Pr.	Setting range	Description
434	0 to 255	Set the inverter network number.
435	0 to 255	Set the inverter station number.
541	0 (initial value)	Frequency command without sign
	1	Frequency command with sign

◆ CC-Link IE TSN communication function setting

Use the following parameters to perform required settings for CC-Link IE TSN communication between the inverter and other devices.
Data can be transmitted to IT systems while performing real-time cyclic communication control.

Pr.	Setting range	Description
434	0 to 255	Enter the IP address of the inverter to be connected to CC-Link IE TSN.
435		
436		
437		
438	0 to 255	Enter the subnet mask of the network to which the inverter belongs.
439		
440		
441		
541	(initial value)	Frequency command without sign
	1	Frequency command with sign
804	0 to 6	In the torque control mode, the torque command source can be selected.
810	0 to 2	The torque limit input method can be selected.
1442	0 to 255	Set the range of connectable IP addresses for the network devices. (When **Pr.1442** to **Pr.1445** = "0 (initial value)", the function is invalid.)
1443		
1444		
1445		
1446	0 to 255, 9999	
1447		
1448		
1459	0 to 2	The internal clocks of connected devices on the network can be synchronized.

Changing and adjusting (calibrating) the frequency (speed) and torque/magnetic flux using analog input

Pr.	GROUP	Name	Pr.	GROUP	Name
125 (903)	T202 T022	Terminal 2 frequency setting gain frequency	126 (905)	T402 T042	Terminal 4 frequency setting gain frequency
C2 (902)	T200	Terminal 2 frequency setting bias frequency	C3 (902)	T201	Terminal 2 frequency setting bias
C4 (903)	T203	Terminal 2 frequency setting gain	C5 (904)	T400	Terminal 4 frequency setting bias frequency
C6 (904)	T401	Terminal 4 frequency setting bias	C7 (905)	T403	Terminal 4 frequency setting gain
C12 (917)	T100	Terminal 1 bias frequency (speed)	C13 (917)	T101	Terminal 1 bias (speed)
C14 (918)	T102	Terminal 1 gain frequency (speed)	C15 (918)	T103	Terminal 1 gain (speed)
C16 (919)	T110	Terminal 1 bias command (torque/ magnetic flux)	C17 (919)	T111	Terminal 1 bias (torque/magnetic flux)
C18 (920)	T112	Terminal 1 gain command (torque/ magnetic flux)	C19 (920)	T113	Terminal 1 gain (torque/magnetic flux)
C38 (932)	T410	Terminal 4 bias command (torque/ magnetic flux)	C39 (932)	T411	Terminal 4 bias (torque/magnetic flux)
C40 (933)	T412	Terminal 4 gain command (torque/ magnetic flux)	C41 (933)	T413	Terminal 4 gain (torque/magnetic flux)
241	M043	Analog input display unit switchover			

The degree (slope) of the output frequency (speed, torque/magnetic flux) to the frequency/torque setting signal (0 to 5 V DC, 0 to 10 V DC or 4 to 20 mA) is selectable to a desired amount.

- To change the frequency (speed) for the maximum analog input **(Pr.125, Pr.126, C14 (Pr.918))**
  To change only the frequency setting (gain) for the maximum analog input voltage (current), set **Pr.125 (Pr.126, C14 (Pr.918))**. (Other calibration parameter settings do not need to be changed.)
- To change the torque/magnetic flux for the maximum analog input **(C18 (Pr.920), C40 (Pr.933))**
  To change only the torque/magnetic flux command of the maximum analog input voltage (current), set to **C18 (Pr.920), C40 (Pr.933)**. (Other calibration parameter settings do not need to be changed.)
- Calibration of analog input bias and gain **(C2 (Pr.902) to C7 (Pr.905), C16 (Pr.919) to C19 (Pr.920), C38 (Pr.932) to C41 (Pr.933))**
  The "bias" and "gain" functions are used to adjust the relationship between the output frequency (torque/magnetic flux) and the setting input signal, such as 0 to 5 V DC/0 to 10 V DC or 4 to 20 mA DC, entered from outside to set the output frequency (torque/ magnetic flux).

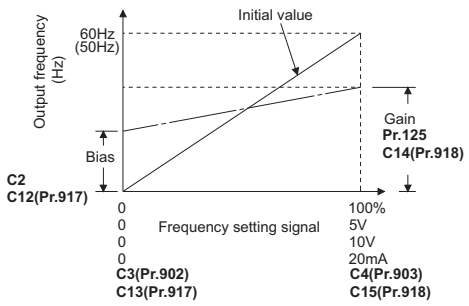

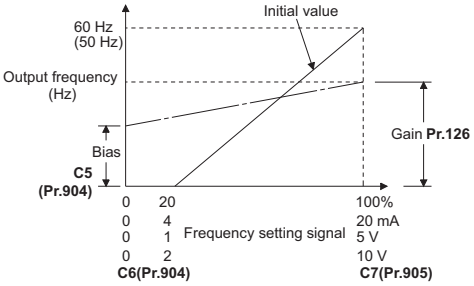

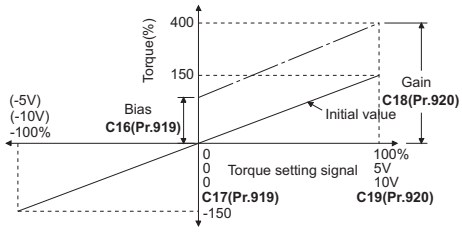

Calibration example of terminal 1

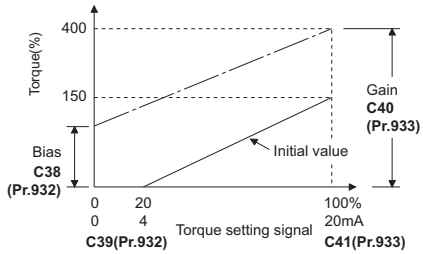

Calibration example of terminal 4

- Analog input display unit changing **(Pr.241)**
  The analog input display unit (%/V/mA) for analog input bias and gain calibration can be changed.

PID control, Dancer control

Pr.	GROUP	Name	Pr.	GROUP	Name
127	A612	PID control automatic switchover frequency	128	A610	PID action selection
129	A613	PID proportional band	130	A614	PID integral time
131	A601	PID upper limit	132	A602	PID lower limit
133	A611	PID action set point	134	A615	PID differential time
553	A603	PID deviation limit	554	A604	PID signal operation selection
575	A621	Output interruption detection time	576	A622	Output interruption detection level
577	A623	Output interruption cancel level	609	A624	PID set point/ deviation input selection
610	A625	PID measured value input selection	753	A650	Second PID action selection
754	A652	Second PID control automatic switchover frequency	755	A651	Second PID action set point
756	A653	Second PID proportional band	757	A654	Second PID integral time
758	A655	Second PID differential time	C42 (934)	A630	PID display bias coefficient
C43 (934)	A631	PID display bias analog value	C44 (935)	A632	PID display gain coefficient
C45 (935)	A633	PID display gain analog value	1015	A607	Integral stop selection at limited frequency
1140	A664	Second PID set point/ deviation input selection	1141	A665	Second PID measured value input selection
1142	A640	Second PID unit selection	1143	A641	Second PID upper limit
1144	A642	Second PID lower limit	1145	A643	Second PID deviation limit
1146	A644	Second PID signal operation selection	1147	A661	Second output interruption detection time
1148	A662	Second output interruption detection level	1149	A663	Second output interruption cancel level
759	A600	PID unit selection	1134	A605	PID upper limit manipulated value
1135	A606	PID lower limit manipulated value	1136	A670	Second PID display bias coefficient
1137	A671	Second PID display bias analog value	1138	A672	Second PID display gain coefficient
1139	A673	Second PID display gain analog value	44	F020	Second acceleration/ deceleration time
45	F021	Second deceleration time			

◆ PID control

Process control such as control of the flow rate, air volume or pressure, is possible via the inverter.

When the parameter unit (FR-PU07) is used, the display unit of parameters and monitored items related to PID control can be changed to various units.

A feedback system can be configured and PID control can be performed using the terminal 2 input signal or parameter setting value as the set point, and the terminal 4 input signal as the feedback value.

- **Pr.128** = "10, 11" (deviation value signal input)

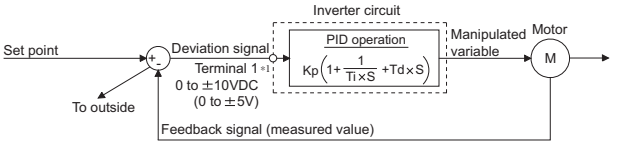

Kp: Proportionality constant Ti: Integral time S: Operator Td: Differential time

- **Pr.128** = "20, 21" (measured value input)

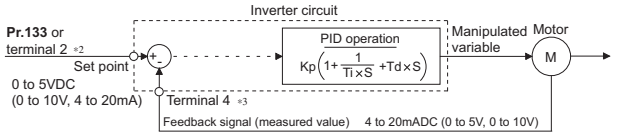

Kp: Proportionality constant Ti: Integral time S: Operator Td: Differential time

When the second PID function is set, two sets of PID functions can be switched for use. The second PID function is enabled by turning ON the RT signal.

◆ Dancer control

Dancer control is performed by setting "40 to 43" in **Pr.128 PID action selection**. The main speed command is the speed command for each operation mode (External, PU and communication). PID control is performed by the dancer roll position detection signal, and the control result is added to the main speed command. For the main speed acceleration/ deceleration time, set the acceleration time to **Pr.44 Second acceleration/deceleration time** and the deceleration time to **Pr.45 Second deceleration time**.

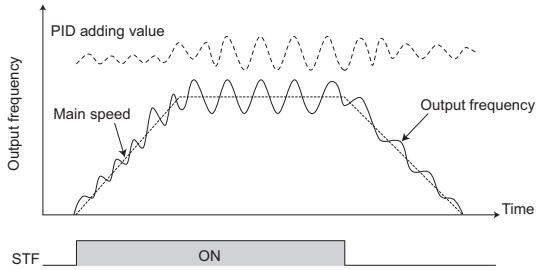

Commercial power supply-inverter switchover function

V/F Magnetic flux Sensorless Vector

Pr.	GROUP	Name	Pr.	GROUP	Name
135	A000	Electronic bypass sequence selection	136	A001	MC switchover interlock time
137	A002	Start waiting time	138	A003	Bypass selection at a fault
139	A004	Automatic switchover frequency from inverter to bypass operation	159	A005	Automatic switchover frequency range from bypass to inverter operation
57	A702	Restart coasting time	58	A703	Restart cushion time

The inverter contains complicated sequence circuits for switching between the commercial power supply operation and inverter operation. Therefore, interlock operation of the magnetic contactor for switching can be easily performed by simply inputting start, stop, and automatic switching selection signals.
The commercial power supply operation is not available with Mitsubishi Electric vector control dedicated motors (SF-V5RU).

Pr.135 setting	Description
0 (initial value)	Without electronic bypass sequence
1	With electronic bypass sequence

Sink logic, **Pr.185** = "7", **Pr.192** = "17", **Pr.193** = "18", **Pr.194** = "19"

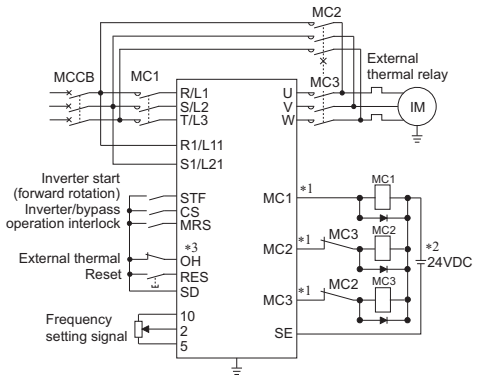

Electronic bypass sequence connection diagram (standard model)

*1 Be careful of the capacity of the sequence output terminals.
*2 When connecting a DC power supply, insert a protective diode.
*3 The applied terminals differ by the settings of **Pr.180** to **Pr.189 (input terminal function selection)** .

Pr. 140 to 143 Refer to the page on Pr.29.
Pr. 144 Refer to the page on Pr.37.

PU display language selection

Pr.	GROUP	Name
145	E103	PU display language selection

The display language of the parameter unit (FR-PU07) can be selected.

Pr.145 setting	Description	Pr.145 setting	Description
0	Japanese	4	Spanish
1	English	5	Italian
2	German	6	Swedish
3	French	7	Finnish

Pr. 147 Refer to the page on Pr.7.
Pr. 148, 149 Refer to the page on Pr.22.

Output current detection (Y12 signal) and zero current detection (Y13 signal)

Pr.	GROUP	Name	Pr.	GROUP	Name
150	M460	Output current detection level	151	M461	Output current detection signal delay time
152	M462	Zero current detection level	153	M463	Zero current detection time
166	M433	Output current detection signal retention time	167	M464	Output current detection operation selection

The output current during inverter running can be detected and output to the output terminal.

- Output current detection
  (Y12 signal, **Pr.150, Pr.151, Pr.166, Pr.167**)
  - The output current detection function can be used for purposes such as overtorque detection.
  - If the output during inverter running is the **Pr.150** setting or higher for the time set in **Pr.151** or longer, the output current detection signal (Y12) is output from the inverter's open collector or relay output terminal.

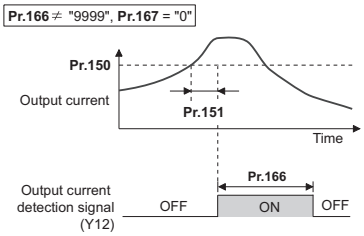

- Zero current detection (Y13 signal, **Pr.152, Pr.153, Pr.167**)
  If the output during inverter running is the **Pr.152** setting or lower for the time set in **Pr.153** or longer, the zero current detection signal (Y13) is output from the inverter's open collector or relay output terminal.

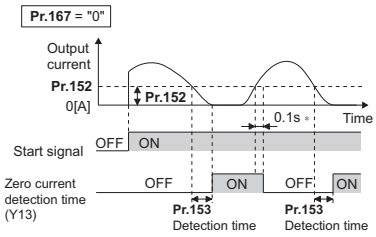

- Output current detection operation selection (**Pr.167**)

Pr.167 setting	Y12 signal-ON	Y13 signal-ON
0 (initial value)	Continuous operation	Continuous operation
1	E.CDO	Continuous operation
10	Continuous operation	E.CDO
11	E.CDO	E.CDO

Pr. 154 Refer to the page on Pr.22.

Selecting operating conditions of the second function signal (RT) and the third function signal (X9)

Pr.	GROUP	Name
155	T730	RT signal function validity condition selection

The second (third) function can be selected by the RT (X9) signal. Operating conditions (validity conditions) for the second (third) function can also be set.

Pr.155 setting	Description
0 (initial value)	The second (third) function is immediately enabled with ON of the RT (X9) signal.
10	The second (third) function will be enabled while the RT signal is ON and while running at a constant speed. (Disabled while accelerating or decelerating)

- Items that can be set as the second function and third function (When the RT (X9) signal is ON, the following second (third) functions are selected at the same time.)

Function	First function Parameter number	Second function Parameter number	Third function Parameter number
Torque boost	Pr.0	Pr.46	Pr.112
Base frequency	Pr.3	Pr.47	Pr.113
Acceleration time	Pr.7	Pr.44	Pr.110
Deceleration time	Pr.8	Pr.44, Pr.45	Pr.110, Pr.111
Electronic thermal O/L relay	Pr.9	Pr.51	*2
Free thermal	Pr.600 to Pr.604	Pr.692 to Pr.696	*2
Stall prevention	Pr.22	Pr.48, Pr.49	Pr.114, Pr.115
Applied motor *1	Pr.71	Pr.450	*2
Motor constant *1	Pr.80 to Pr.84, Pr.89 to Pr.94, Pr.298, Pr.702, Pr.706, Pr.707, Pr.711, Pr.712, Pr.717, Pr.721, Pr.724, Pr.725, Pr.859	Pr.453 to Pr.457, Pr.560, Pr.569, Pr.458 to Pr.462, Pr.738 to Pr.747, Pr.860	*2
Offline auto tuning *1	Pr.96	Pr.463	*2
Online auto tuning *1	Pr.95	Pr.574	*2
PID control	Pr.127 to Pr.134	Pr.753 to Pr.758	*2
PID pre-charge function	Pr.760 to Pr.764	Pr.765 to Pr.769	*2
Brake sequence *1	Pr.278 to Pr.285, Pr.639, Pr.640	Pr.641 to Pr.648, Pr.650, Pr.651	*2
Droop	Pr.286 to Pr.288, Pr.994, Pr.995	Pr.679 to Pr.683	*2
Low-speed range torque characteristic selection *1	Pr.788	Pr.747	*2
Motor control method *1	Pr.800	Pr.451	*2
Speed control gain	Pr.820, Pr.821	Pr.830, Pr.831	*2
Analog input filter	Pr.822, Pr.826	Pr.832, Pr.836	*2
Speed detection filter	Pr.823	Pr.833	*2
Torque control gain	Pr.824, Pr.825	Pr.834, Pr.835	*2
Torque detection filter	Pr.827	Pr.837	*2

*1 The function can be changed by switching the RT signal ON/OFF while the inverter is stopped. If a signal is switched during operation, the operation method changes after the inverter stops.
*2 When the RT signal is OFF, the first function is selected and when it is ON, the second function is selected.

Pr.156, 157 Refer to the page on Pr.22.
Pr.158 Refer to the page on Pr.52.
Pr.159 Refer to the page on Pr.135.

User group function

Pr.	GROUP	Name	Pr.	GROUP	Name
160	E440	User group read selection	172	E441	User group registered display/ batch clear
173	E442	User group registration	174	E443	User group clear

This function restricts the parameters that are read by the operation panel and parameter unit.
The initial setting displays all parameters.

Pr.160 setting	Description
0 (initial value)	Displays all parameters.
1	Displays parameters registered in the user group.
9999	Displays only the simple mode parameters.

- User group function **(Pr.160, Pr.172 to Pr.174)**
  The user group function is a function for displaying only the parameters required for a setting.
  A maximum of 16 parameters from any of the parameters can be registered in a user group. When **Pr.160** = "1", reading/writing is enabled only for the parameters registered in user groups. (Parameters not registered in user groups can no longer be read.)
  To register a parameter in a user group, set the parameter number in **Pr.173**.
  To clear a parameter from a user group, set the parameter number in **Pr.174**. To batch clear all the registered parameters, set **Pr.172** = "9999".

Operation panel operation selection

Pr.	GROUP	Name	Pr.	GROUP	Name
161	E200	Frequency setting/ key lock operation selection	295	E201	Frequency change increment amount setting

◆ Setting dial potentiometer mode/key lock operation selection (Pr.161)

The setting dial of the operation panel (FR-DU08) can be used for setting like a potentiometer.
The key operation of the operation panel can be disabled.

Pr.161 setting	Description	
0 (initial value)	Setting dial frequency setting mode	Key lock mode disabled
1	Setting dial potentiometer mode	
10	Setting dial frequency setting mode	Key lock mode enabled
11	Setting dial potentiometer mode	

◆ Frequency change increment amount setting (Pr.295)

When setting a frequency using the setting dial on the operation panel (FR-DU08), the frequency change increment is determined by how quickly the setting dial is rotated.

Pr.162 to 165 Refer to the page on Pr.57.
Pr.166, 167 Refer to the page on Pr.150.
Pr.168, 169 Parameter for manufacturer setting. Do not set.
Pr.170, 171 Refer to the page on Pr.52.
Pr.172 to 174 Refer to the page on Pr.160.

Input terminal function assignment

Pr.	GROUP	Name	Pr.	GROUP	Name
178	T700	STF terminal function selection	179	T701	STR terminal function selection
180	T702	RL terminal function selection	181	T703	RM terminal function selection
182	T704	RH terminal function selection	183	T705	RT terminal function selection
184	T706	AU terminal function selection	185	T707	JOG terminal function selection
186	T708	CS terminal function selection	187	T709	MRS terminal function selection
188	T710	STOP terminal function selection	189	T711	RES terminal function selection
699	T740	Input terminal filter			

Use the following parameters to select or change the input terminal functions.
(When **Pr.419 Position command source selection** = "2" (simple pulse train position command), terminal JOG is used as a simple position pulse train input terminal, independently of the **Pr.185** setting.)

Setting	Signal name	Function	
0	RL	**Pr.59** = 0 (initial value)	Low-speed operation command
		Pr.59 ≠ 0 *1	Remote setting (setting clear)
		Pr.270 = 1, 3, 11, 13 *2	Stop-on-contact selection 0
1	RM	**Pr.59** = 0 (initial value)	Middle-speed operation command
		Pr.59 ≠ 0 *1	Remote setting (deceleration)
2	RH	**Pr.59** = 0 (initial value)	High-speed operation command
		Pr.59 ≠ 0 *1	Remote setting (acceleration)
3	RT	Second function selection	
		Pr.270 = 1, 3, 11, 13 *2	Stop-on-contact selection 1
4	AU	Terminal 4 input selection	
5	JOG	Jog operation selection	
6	CS	Selection of automatic restart after instantaneous power failure, flying start	
		Electronic bypass function	
7	OH	External thermal relay input *3	
8	REX	15-speed selection (Combination with multi-speeds of RL, RM, and RH)	
9	X9	Third function selection	
10	X10	Inverter run enable signal (FR-HC2/FR-XC/FR-CV/FR-CC2 connection)	
11	X11	FR-HC2/FR-CC2 connection, instantaneous power failure detection	
12	X12	PU operation external interlock	
13	X13	External DC injection brake operation start	
14	X14	PID control valid terminal	
15	BRI	Brake opening completion signal	
16	X16	PU/External operation switchover (External operation with X16-ON)	
17	X17	Load pattern selection forward/reverse rotation boost (for constant-torque load with X17-ON)	
18	X18	V/F switchover (V/F control with X18-ON)	
19	X19	Load torque high-speed frequency	
20	X20	S-pattern acceleration/deceleration C switchover	
22	X22	Orientation command (for vector control compatible option)*4*6	
23	LX	Pre-excitation/servo ON *5	
24	MRS	Output stop	
		Electronic bypass function	
25	STOP	Start self-holding selection	
26	MC	Control mode switchover	
27	TL	Torque limit selection	
28	X28	Start-time tuning start external input	
32	X32	External fault input	
37	X37	Traverse function selection	
42	X42	Torque bias selection 1	
43	X43	Torque bias selection 2	
44	X44	P/PI control switchover(P control with X44-ON)	
45	BRI2	Second brake sequence open completion	
46	TRG	Trace trigger input	
47	TRC	Trace sampling start/end	
48	X48	Power failure stop external	
50	SQ	Sequence start	
51	X51	Fault clear signal	
52	X52	Cumulative pulse monitor clear (for vector control compatible option)*6	
53	X53	Cumulative pulse monitor clear (control terminal option) (for FR-A8TP)*6	
57	JOGF	JOG forward rotation command	
58	JOGR	JOG reverse rotation command	
59	CLRN	NET position pulse clear	
60	STF	Forward rotation command (Assignable to the STF terminal **(Pr.178)** only)	
61	STR	Reverse rotation command (Assignable to the STR terminal **(Pr.179)** only)	
62	RES	Inverter reset	
64	X64	During retry	
65	X65	PU/NET operation switchover (PU operation with X65-ON)	
66	X66	External/NET operation switchover (NET operation with X66-ON)	
67	X67	Command source switchover (Command by **Pr.338, Pr.339** enabled with X67-ON)	
68	NP	Simple position pulse train sign	
69	CLR	Simple position droop pulse clear	
70	X70	DC feeding operation permission*7	
71	X71	DC feeding cancel*7	
72	X72	PID P control switchover	
73	X73	Second PID P control switchover	
74	X74	Magnetic flux decay output shutoff signal	
76	X76	Proximity dog	
77	X77	Pre-charge end command	
78	X78	Second pre-charge end command	
79	X79	Second PID forward/reverse action switchover	
80	X80	Second PID control valid terminal	
85	X85	SSCNET III(/H) communication disabled (for FR-A8NS)*6	
87	X87	Sudden stop	
88	X88	Upper stroke limit	
89	X89	Lower stroke limit	
92	X92	Emergency stop	
93	X93	Torque control selection	
94	X94	Control signal input for main circuit power supply MC	
95	X95	Converter unit fault input	
96	X96	Converter unit fault (E.OHT, E.CPU) input	
9999	—	No function	

*1 When **Pr.59 Remote function selection** ≠ "0", functions of the RL, RM, and RH signals will be changed as in the table.
*2 When **Pr.270 Stop-on contact/load torque high-speed frequency control selection** = "1, 3, 11, or 13", functions of the RL and RT signals will be changed as in the table.
*3 The OH signal will operate with the relay contact "open".
*4 When the stop position is to be input externally for orientation control, the FR-A8AX (16-bit digital input) is required.
*5 Servo ON is enabled during the position control.
*6 Available when the option is connected.
*7 The setting is available only for standard models and IP55 compatible models.

- Adjusting the response of input terminal **(Pr.699)**

Pr.699 setting	Description
5 to 50 ms	Set the time to delay the input terminal response.
9999 (initial value)	No input terminal filter

Output terminal function assignment

Pr.	GROUP	Name	Pr.	GROUP	Name
190	M400	RUN terminal function selection	191	M401	SU terminal function selection
192	M402	IPF terminal function selection	193	M403	OL terminal function selection
194	M404	FU terminal function selection	195	M405	ABC1 terminal function selection
196	M406	ABC2 terminal function selection	289	M431	Inverter output terminal filter
313	M410	DO0 output selection	314	M411	DO1 output selection
315	M412	DO2 output selection			

Use the following parameters to change the functions of the open collector output terminals and relay output terminals.
Pr.313 to Pr.315 can be set only when the FR-A800-GF is used or a compatible plug-in option is installed.

Setting		Signal name	Function
Positive logic	Negative logic		
0	100	RUN	Inverter running
1	101	SU	Up to frequency*1
2	102	IPF	Instantaneous power failure/undervoltage*5
3	103	OL	Overload warning
4	104	FU	Output frequency detection
5	105	FU2	Second output frequency detection
6	106	FU3	Third output frequency detection
7	107	RBP	Regenerative brake pre-alarm*4
8	108	THP	Electronic thermal O/L relay pre-alarm
10	110	PU	PU operation mode
11	111	RY	Inverter operation ready
12	112	Y12	Output current detection
13	113	Y13	Zero current detection
14	114	FDN	PID lower limit
15	115	FUP	PID upper limit
16	116	RL	PID forward/reverse rotation output
17	—	MC1	Electronic bypass MC1
18	—	MC2	Electronic bypass MC2
19	—	MC3	Electronic bypass MC3
20	120	BOF	Brake opening request
22	122	BOF2	Second brake opening request
25	125	FAN	Fan fault output
26	126	FIN	Heat sink overheat pre-alarm
27	127	ORA	Orientation complete (for vector control compatible option)*3
28	128	ORM	Orientation fault (for vector control compatible option)*3
30	130	Y30	Forward rotation output (for vector control compatible option)*3
31	131	Y31	Reverse rotation output (for vector control compatible option)*3
32	132	Y32	Regenerative status output (for vector control compatible option)*3
33	133	RY2	Operation ready 2
34	134	LS	Low speed detection
35	135	TU	Torque detection
36	136	Y36	In-position
38	138	MEND	Travel completed
39	139	Y39	Start time tuning completion
40	140	Y40	Trace status
41	141	FB	Speed detection
42	142	FB2	Second speed detection
43	143	FB3	Third speed detection
44	144	RUN2	Inverter running 2
45	145	RUN3	Inverter running and start command is ON
46	146	Y46	During deceleration at occurrence of power failure*5
47	147	PID	During PID control activated
48	148	Y48	PID deviation limit
49	149	Y49	During pre-charge operation
50	150	Y50	During second pre-charge operation
51	151	Y51	Pre-charge time over
52	152	Y52	Second pre-charge time over
53	153	Y53	Pre-charge level over
54	154	Y54	Second pre-charge level over
55	155	Y55	Motor temperature detection (for FR-A8AZ)*3*7
56	156	ZA	Home position return failure
57	157	IPM	During PM sensorless vector control*7
60	160	FP	Position detection level
61	161	PBSY	During position command operation
63	163	ZPEND	Home position return completed
64	164	Y64	During retry*7
67	167	Y67	Power failure signal
68	168	EV	24 V external power supply operation
70	170	SLEEP	PID output interruption
79	179	Y79	Pulse train output of output power
80	180	SAFE	Safety monitor output*7
84	184	RDY	Position control preparation ready
85	185	Y85	DC current feeding*5
86	186	Y86	Control circuit capacitor life (For **Pr.313** to **Pr.322**)*6
87	187	Y87	Main circuit capacitor life (For **Pr.313** to **Pr.322**)*5*6*7
88	188	Y88	Cooling fan life (For **Pr.313** to **Pr.322**)*6
89	189	Y89	Inrush current limit circuit life (For **Pr.313** to **Pr.322**)*5*6*7
90	190	Y90	Life alarm
91	191	Y91	Fault output 3 (power-OFF signal)
92	192	Y92	Energy saving average value updated timing
93	193	Y93	Current average monitor signal
94	194	ALM2	Fault output 2
95	195	Y95	Maintenance timer signal
96	196	REM	Remote output
97	197	ER	Alarm output 2
98	198	LF	Alarm
99	199	ALM	Fault
200	300	FDN2	Second PID lower limit
201	301	FUP2	Second PID upper limit
202	302	RL2	Second PID forward/reverse rotation output
203	303	PID2	Second During PID control activated
204	304	SLEEP2	During second PID output shutoff
205	305	Y205	Second PID deviation limit
206	306	Y206	Cooling fan operation command signal
207	307	Y207	Control circuit temperature signal
208	308	PS	PU stopped signal
211	311	LUP	Upper limit warning detection*7
212	312	LDN	Lower limit warning detection*7
213	313	Y213	During load characteristics measurement*7
227	327	Y227	Parallel operation ready*8
242	342	LNK	Inverter-to-inverter linkup*9
9999		—	No function

*1 Be careful when changing the frequency setting with an analog signal or the setting dial of the operation panel (FR-DU08) because this change speed and the timing of the change speed determined by the acceleration/deceleration time setting may cause the output of the SU (up to frequency) signal to switch repeatedly between ON and OFF. (This repeating does not occur when the acceleration/deceleration time setting is "0 s".)
*2 When the power is reset, the fault output 2 signal (ALM2) turns OFF at the same time as the power turns OFF.
*3 Available when the option is connected.
*4 The setting is available only for standard models.
*5 The setting is available only for standard models and IP55 compatible models.
*6 The setting can be used for **Pr.313 to Pr.322** for the FR-A800-GF or when an option (FR-A8AY, FR-A8AR, FR-A8NC, or FR-A8NCE) is installed. For the corresponding parameters of each option, refer to the Instruction Manual of the option.
*7 The function is not available in the FR-A842-P.
*8 The setting is available only in the FR-A842-P.
*9 The setting is available only in the FR-A800-E.

- Adjusting the output terminal response level (**Pr.289**)

Pr. 289 setting	Description
5 to 50 ms	Set the time delay for the output terminal response.
9999 (initial value)	No output terminal filter.

Pr. 232 to 239 Refer to the page on Pr.4.
Pr. 240 Refer to the page on Pr.72.
Pr. 241 Refer to the page on Pr.125.
Pr. 242, 243 Refer to the page on Pr.73.

Cooling fan operation selection

Pr.	GROUP	Name
244	H100	Cooling fan operation selection

A cooling fan is built into the inverter and its operation can be controlled.

Pr.244 setting	Description
0	A cooling fan operates at power ON. Cooling fan ON/OFF control is invalid. (The cooling fan is always ON at power ON)
1 (initial value)	Cooling fan ON/OFF control is valid. The fan is always ON while the inverter is running. During a stop, the inverter status is monitored and the fan switches ON/OFF according to the temperature.
101 to 105	Cooling fan ON/OFF control is valid. Set the cooling fan stop waiting time within 1 to 5 s. The waiting time is the **Pr.244** setting minus 100.

Slip compensation V/F

Pr.	GROUP	Name	Pr.	GROUP	Name
245	G203	Rated slip	246	G204	Slip compensation time constant
247	G205	Constant-power range slip compensation selection			

Motor slip is estimated from the inverter output current and the rotation of the motor is maintained as a constant.

Self power management V/F Magnetic flux PM

Pr.	GROUP	Name	Pr.	GROUP	Name
248	A006	Self power management selection	254	A007	Main circuit power OFF waiting time
137	A002	Start waiting time	30	E300	Regenerative function selection

By turning ON the magnetic contactor (MC) on the input side before the motor is started and turning OFF the MC after the motor is stopped, supplying power to the main circuit is stopped, reducing the standby power.

Pr.	Setting range	Description
248	0 (initial value)	Self power management function disabled
	1	Self power management function enabled (main circuit OFF at protective function activation)
	2	Self power management function enabled (main circuit OFF at protective function activation due to a circuit failure)
137	0 to 100 s	Set a time period that is a little longer than the time period from the ON signal input to the actual pick-up operation of MC1 (0.3 to 0.5 s).
254	1 to 3600 s	Set the waiting time until the main circuit power supply is turned OFF after the motor is stopped.
	9999	The main circuit power supply is turned OFF only when the protective function selected by **Pr.248** is activated.
30	100, 101	Power supply to the inverter: AC (terminals R, S, and T) When power is supplied only to the control circuit, and then switched to be supplied to both the control and main circuits, inverter reset is not performed.
	0 to 2, 10, 11, 20, 21, 102, 110, 111, 120, 121	For other settings, refer to **page 123**.

Earth (ground) fault detection at start V/F Magnetic flux

Pr.	GROUP	Name
249	H101	Earth (ground) fault detection at start

Select whether to enable/disable earth (ground) fault detection at start. When enabled, earth (ground) fault detection is performed immediately after a start signal is input to the inverter.

Pr.249 setting	Description
0 (initial value)	Without the earth (ground) fault detection at start
1	With the earth (ground) fault detection at start

- If a ground fault is detected at start while **Pr.249** = "1", the output side earth (ground) fault overcurrent (E.GF) is displayed and the outputs are shut off.

Motor stop method/start signal selection

Pr.	GROUP	Name
250	G106	Stop selection

Select the stopping method (deceleration stop or coasting) at turn-OFF of the start signal.
Use this function to stop a motor with a mechanical brake at turn-OFF of the start signal.
The start signal (STF/STR) operation can also be selected.

Pr.250 Setting	Description	
	Start signal (STF/STR)	Stop operation
0 to 100 s	STF signal: Forward rotation start STR signal: Reverse rotation start	It will coast to stop after set time when the start signal is turned OFF.
1000 s to 1100 s	STF signal: Start signal STR signal: Forward/ reverse rotation signal	It will coast to stop after (**Pr.250** - 1000) s when the start signal is turned OFF.
9999	STF signal: Forward rotation start STR signal: Reverse rotation start	It will perform deceleration stop when the start signal is turned OFF.
8888	STF signal: Start signal STR signal: Forward/ reverse rotation signal	

When **Pr.250** is "9999 (initial value) or 8888"

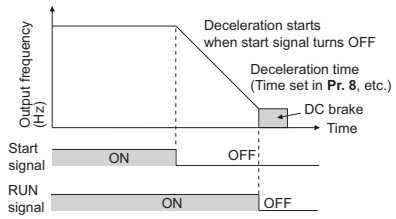

When **Pr.250** is other than "9999 (initial value) or 8888"

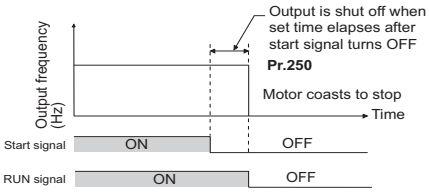

I/O phase loss protection selection

Pr.	GROUP	Name	Pr.	GROUP	Name
251	H200	Output phase loss protection selection	872	H201	Input phase loss protection selection

The output phase loss protective function, which stops the inverter output if one of the three phases (U, V, W) on the inverter's output side (load side) is lost, can be disabled.
The input phase loss protective function on the inverter's input side (R, S, T) can be enabled.

Pr.	Setting range	Description
251	0	Without output phase loss protection
	1 (initial value)	With output phase loss protection
872	0 (initial value)	Without input phase loss protection
	1	With input phase loss protection

Pr. 252, 253 Refer to the page on Pr.73.

Displaying the life of the inverter parts

Pr.	GROUP	Name	Pr.	GROUP	Name
255	E700	Life alarm status display	256	E701	Inrush current limit circuit life display
257	E702	Control circuit capacitor life display	258	E703	Main circuit capacitor life display
259	E704	Main circuit capacitor life measuring	506	E705	Display estimated main circuit capacitor residual life

The degree of deterioration of the main circuit capacitor, control circuit capacitor, inrush current limit circuit, cooling fan, and internal fan alarm*2 can be diagnosed on the monitor.
When a part approaches the end of its life, an alarm can be output by self diagnosis to prevent a fault.
(Note that the life diagnosis of this function should be used as a guideline only, because with the exception of the main circuit capacitor, the life values are theoretical calculations.)

Pr.	Setting range	Description
255	(0 to 15, 32 to 47) *1	Displays whether or not the parts of the control circuit capacitor, main circuit capacitor, cooling fan, Internal fan alarm*2, and inrush current limit circuit have reached the life alarm output level. Read-only.
256*3	(0 to 100%)	Displays the deterioration degree of the inrush current limit circuit. Read-only.
257*3	(0 to 100%)	Displays the deterioration degree of the control circuit capacitor. Read-only.
258*3	(0 to 100%)	Displays the deterioration degree of the main circuit capacitor. Read-only. The value measured by **Pr.259** is displayed.
259*3	0, 1 (2, 3, 8, 9)	Setting "1" and turning the power supply OFF starts the measurement of the main circuit capacitor life. If the setting value of **Pr.259** becomes "3" after turning the power supply ON again, it means that the measurement is completed. The deterioration degree is read to **Pr.258**.
506*3	(0 to 100%)	Displays the estimated residual life of the main circuit capacitor. Read-only.

*1 The setting range (reading only) for separated converter types is "0, 1, 4, or 5". The setting range (reading only) for IP55 compatible models is "0 to 63".
*2 The internal fan is only available for the IP55 compatible model.
*3 The setting is available only for standard models and IP55 compatible models.

Pr. 260 Refer to the page on Pr.72.

Power failure time deceleration stop function

Pr.	GROUP	Name	Pr.	GROUP	Name
261	A730	Power failure stop selection	262	A731	Subtracted frequency at deceleration start
263	A732	Subtraction starting frequency	264	A733	Power-failure deceleration time 1
265	A734	Power-failure deceleration time 2	266	A735	Power failure deceleration time switchover frequency
294	A785	UV avoidance voltage gain	606	T722	Power failure stop external signal input selection
668	T786	Power failure stop frequency gain			

At instantaneous power failure or undervoltage, the motor can be decelerated to a stop or decelerated once and re-accelerated to the set frequency.

Pr.	Setting range	Description
261	0 (initial value)	Power failure time deceleration stop function disabled
	1, 2, 11, 12, 21, 22	Power failure time deceleration stop function enabled Select action at an undervoltage or when a power failure occurs.
262	0 to 20Hz	Normally, the motor runs at the initial value as it is. However, adjust to suit the size of the load specification (moment of inertia, torque).
263	0 to 590 Hz	When output frequency ≥ **Pr.263** Deceleration from (output frequency - **Pr.262**) When output frequency < **Pr.263** Deceleration from output frequency
	9999	Deceleration from (output frequency - **Pr.262**)
264	0 to 3600 s	Set the slope applicable from the deceleration start to the **Pr.266** set frequency.
265	0 to 3600 s	Set the slope applicable for the frequency range starting at **Pr.266** and downward.
	9999 (initial value)	Same as **Pr.264**.
266	0 to 590 Hz	Set the frequency at which the slope during deceleration switches from the **Pr.264** setting to the **Pr.265** setting.
294	0 to 200%	Adjust the response level at UV avoidance operation. Setting a large value improves the response to changes in the bus voltage. If the inertia is high, the amount of regeneration is too large. Set a smaller value.
606	0	Normally open input (NO contact input specification)
	1 (initial value)	Normally closed input (NC contact input specification)
668	0 to 200%	Adjust the response level for the operation where the deceleration time is automatically adjusted.

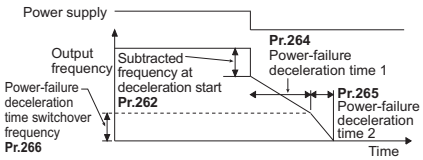

- Set **Pr.261** to select the action at an undervoltage and power failure.

Pr.261 setting	Action at undervoltage and power failure	Power restoration during deceleration at occurrence of power failure	Deceleration stop time	Undervoltage avoidance function
0	Coasts to stop	Coasts to stop	-	-
1	Deceleration stop	Deceleration stop	According to **Pr.262** to **Pr.266** setting	Not used
2		Re-acceleration		Not used
11		Deceleration stop		With
12		Re-acceleration		With
21		Deceleration stop	Automatic adjustment of deceleration time	Not used
22		Re-acceleration		Not used

- Power failure stop function (**Pr.261** = "1, 11, 21")
  Even if power is restored during deceleration triggered by a power failure, deceleration stop is continued after which the inverter stays stopped. To restart operation, turn the start signal OFF then ON again.

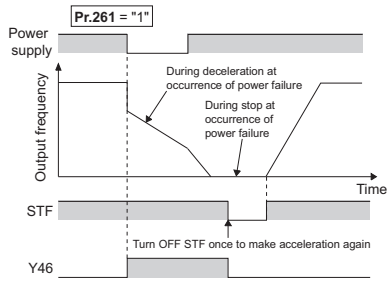

- Continuous operation function at instantaneous power failure (**Pr.261** = "2, 12, 22")
  The motor re-accelerates to the set frequency if the power restores during deceleration at occurrence of power failure. Combining with the automatic restart after instantaneous power failure function enables a power failure time deceleration stop and re-acceleration at a power restoration.
  If the power is restored after stoppage by a power failure, a restart operation is performed when automatic restart after instantaneous power failure (**Pr.57** ≠ "9999") is selected.

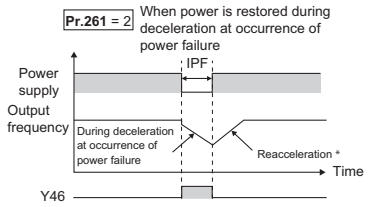

* Acceleration time depends on **Pr.7** (**Pr.44**).

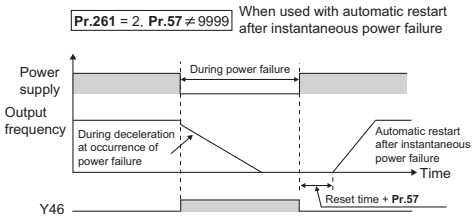

- Automatic adjustment of deceleration time (**Pr.261** = "21, 22" **Pr.294**, **Pr.668**)
  When "21, 22" is set in **Pr.261**, the deceleration time is automatically adjusted to keep (DC bus) voltage constant in the converter when the motor decelerates to a stop at a power failure. Setting of **Pr.262** to **Pr.266** is not required.
  Use **Pr.668 Power failure stop frequency gain** to adjust the response level during deceleration time auto adjustment. Increasing the setting improves the response level to the bus voltage fluctuations, but the output frequency may be unstable.
  If setting **Pr.294 UV avoidance voltage gain** lower also does not suppress the vibration, set **Pr.668** lower.

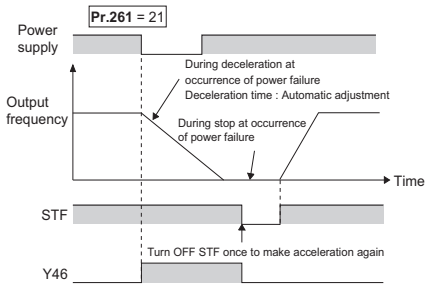

Pr.267 **Refer to the page on Pr.73.**

Pr.268 **Refer to the page on Pr.52.**

Pr.269 **Parameter for manufacturer setting. Do not set.**

Load torque high-speed frequency control

Pr.	GROUP	Name	Pr.	GROUP	Name
270	A200	Stop-on contact/load torque high-speed frequency control selection	271	A201	High-speed setting maximum current
272	A202	Middle-speed setting minimum current	273	A203	Current averaging range
274	A204	Current averaging filter time constant	4	D301	Multi-speed setting (high speed)
5	D302	Multi-speed setting (middle speed)			

This function is designed to increase speed automatically under light load, for example to minimize the incoming/outgoing time in a multi-story parking lot.
The load size during power driving is estimated by detecting average currents at set timings after a start. When the load is light, the frequency is increased from the originally-set frequency. (During regeneration load operation, the frequency is not increased.)

Pr.270 setting	Description	
0 (initial value)	Normal operation	
1	Stop-on-contact control	
2	Load torque high-speed frequency control	
3	Stop-on-contact + load torque high-speed frequency control	
11	Stop-on-contact control	E.OLT detection invalid under stop-on contact control
13	Stop-on-contact + load torque high-speed frequency control	

- Set such items as the current and averaging range for load torque high-speed frequency control selected by setting **Pr.270** = "2 or 3".
- When the load torque high-speed frequency selection (X19) signal is ON, the inverter automatically adjusts the maximum frequency in the range between the **Pr.4 Multi-speed setting (high speed)** and **Pr.5 Multi-speed setting (middle speed)** setting in accordance with the average current while the motor is accelerating from a frequency that is half of the **Pr.5** setting to the **Pr.5** setting as shown in the figure below.

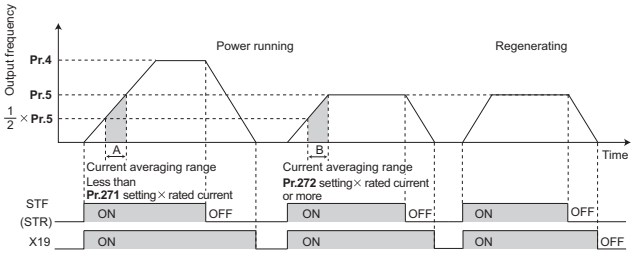

Pr.	Setting range	Description
4	0 to 590 Hz	Set the higher-speed frequency.
5	0 to 590 Hz	Set the lower-speed frequency.
271	0 to 400%	Set the upper and lower limits of the current at high and middle speeds.
272	0 to 400%	
273	0 to 590 Hz	Set the average current during acceleration from (**Pr.273** × 1/2) Hz to (**Pr.273**) Hz.
	9999 (Initialization)	Set the average current during acceleration from (**Pr.5** × 1/2) Hz to (**Pr.5**) Hz.
274	1 to 4000	Set the time constant of the primary delay filter relative to the output current. (The time constant [ms] is 0.5 × **Pr.274**, and the initial value is 8 ms.) A larger setting results in a stable operation with poorer response.

Stop-on-contact control Magnetic flux Sensorless

Pr.	GROUP	Name	Pr.	GROUP	Name
270	A200	Stop-on contact/load torque high-speed frequency control selection	275	A205	Stop-on contact excitation current low-speed multiplying factor
276	A206	PWM carrier frequency at stop-on contact	22	H500	Stall prevention operation level
6	D303	Multi-speed setting (low speed)	48	H600	Second stall prevention operation level

To ensure accurate positioning at the upper limit, etc. of a lift, stop-on-contact control causes the mechanical brake to close while the motor creates a holding torque to keep the load in contact with a mechanical stopper, etc.
This function suppresses vibration that is likely to occur when the load is stopped upon contact in lift applications, thereby ensuring reliable and highly accurate positioning stop.

Pr.270 setting	Description	
0 (initial value)	Normal operation	
1	Stop-on-contact control	
2	Load torque high-speed frequency control	
3	Stop-on-contact + load torque high-speed frequency control	
11	Stop-on-contact control	E.OLT invalid under stop-on-contact control
13	Stop-on-contact + load torque high-speed frequency control	

- Select either Real sensorless vector control (speed control) or Advanced magnetic flux vector control.
  When both the RT and RL signals are switched ON, the inverter enters the stop-on-contact control, and operation is performed at the frequency set in **Pr.6 Multi-speed setting (low speed)** independently of the preceding speed.

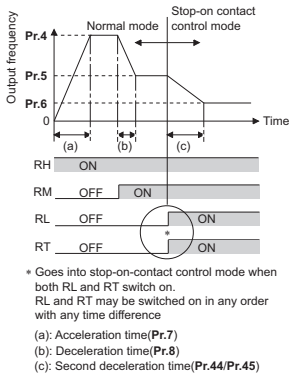

Pr.	Setting range	Description
6	0 to 590 Hz	Set the output frequency for stop-on-contact control. Set the frequency as low as possible (about 2 Hz). If a frequency higher than 30 Hz is set, it operates with 30 Hz. When performing stop-on-contact control during encoder feedback control, encoder feedback control is invalid due to a transition to the stop-on-contact control mode.
22	0 to 400%	Set the stall prevention operation level for stop-on-contact control used under Advanced magnetic flux vector control. The smaller value set in either **Pr.22** or **Pr.48** has priority. The torque limit level uses the **Pr.22** setting for Real sensorless vector control.
48	0 to 400%	
275	0 to 300%	Normally set this parameter within the range of 130% to 180%. Set the force (holding torque) for stop-on-contact control.
	9999 (initial value)	No compensation.

Pr.	Setting range	Description
276*3	0 to 9*1	Set a PWM carrier frequency for stop-on-contact control. For Real sensorless vector control, the carrier frequency is always 2 kHz when the setting value is 0 to 5 and always 6 kHz when the setting value is 6 to 9. (Valid at the output frequency of 3 Hz or less.)
	0 to 4*2	
	9999 (initial value)	As set in **Pr.72 PWM frequency selection**.

*1 The setting range of FR-A820-03160(55K) or lower and FR-A840-01800(55K) or lower
*2 The setting range of FR-A820-03800(75K) or higher and FR-A840-02160(75K) or higher
*3 Not available for the FR-A842-P.

Brake sequence function

Pr.	GROUP	Name	Pr.	GROUP	Name
278	A100	Brake opening frequency	279	A101	Brake opening current
280	A102	Brake opening current detection time	281	A103	Brake operation time at start
282	A104	Brake operation frequency	283	A105	Brake operation time at stop
284	A106	Deceleration detection function selection	285	A107	Overspeed detection frequency
292	A110 F500	Automatic acceleration/ deceleration	639	A108	Brake opening current selection
640	A109	Brake operation frequency selection	641	A130	Second brake sequence operation selection
642	A120	Second brake opening frequency	643	A121	Second brake opening current
644	A122	Second brake opening current detection time	645	A123	Second brake operation time at start
646	A124	Second brake operation frequency	647	A125	Second brake operation time at stop
648	A128	Second deceleration detection function selection	650	A128	Second brake opening current selection
651	A129	Second brake operation frequency selection			

This function outputs operation timing signals of the mechanical brake from the inverter, such as for lift applications.
This function is useful in preventing load slippage at a start due to poor mechanical brake timing and overcurrent alarm in stop status and enable secure operation.
<Operation example>

- At start
  When the start signal is input to the inverter, the inverter starts running, and when the output frequency reaches the frequency set in **Pr.278** and the output current or the motor torque is equal to or greater than the **Pr.279** setting, the brake opening request signal (BOF) is output after the time set in **Pr.280**. The brake opening completion signal (BRI) is input, and the output frequency is increased to the set speed after the set time in **Pr.281**.
- Deceleration time
  When the inverter decelerates to the frequency set in **Pr.282**, the inverter turns OFF the BOF signal and decelerates further to the frequency set in **Pr.278**. After electromagnetic brake operation completes and the inverter recognizes the turn OFF of the BRI signal, the inverter holds the frequency set in **Pr.283** for the time set in **Pr.283**. And after the time set in **Pr.283** passes, the inverter decelerates again. *1 The inverter outputs is shut off when the frequency reaches **Pr.13 Starting frequency** setting or 0.5 Hz, whichever is lower.
  *1 When **Pr.292** = "8" (without mechanical brake opening completion signal input), the time starts when the brake opening completion signal is output.

When **Pr.292** = "7" (with brake opening completion signal input)

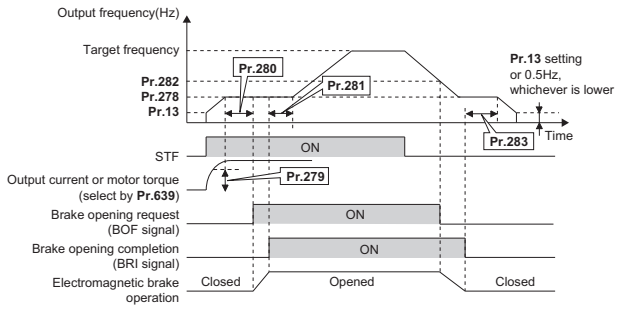

When **Pr.292** = "8" (without brake opening completion signal input)

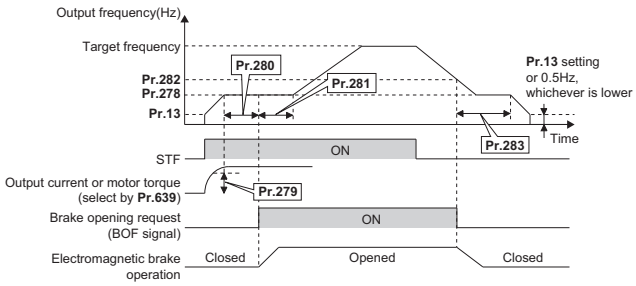

- Turning ON the RT signal enables the second brake sequence function.

Pr.	Setting range	Description
278	0 to 30Hz	Set the rated slip frequency of the motor + approx. 1.0 Hz. This can be set only when **Pr.278** ≤ **Pr.282**.
279	0 to 400%	If the setting is too low, dropping of the load is more likely to occur at a start, and generally, it is set between 50 and 90%. The inverter rated current is regarded as 100%.
280	0 to 2 s	Generally set between 0.1 and 0.3 s.
281	0 to 5 s	**Pr.292** = 7: Set the mechanical delay time until braking eases. **Pr.292** = 8: Set the mechanical delay time until braking eases + approx. 0.1 to 0.2 s.
282	0 to 30Hz	Frequency that turns OFF the brake opening request signal (BOF) and operates the electromagnetic brake. Generally, set the setting value of **Pr.278** + 3 to 4 Hz. This can be set only when **Pr.282** ≥ **Pr.278**.
283	0 to 5 s	**Pr.292** = 7: Set the mechanical delay time until the brake closes + 0.1 s. **Pr.292** = 8: Set the mechanical delay time until the brake closes + approx. 0.2 to 0.3 s.
284	0 (initial value)	The deceleration detection function disabled.
	1	The protective function activates when the deceleration speed of the deceleration operation is not normal.
285 *2	0 to 30Hz	The brake sequence fault (E.MB1) activates when the difference between the detection frequency and output frequency is equal to or greater than the setting value under encoder feedback control.
	9999 (initial value)	Overspeed detection disabled.
292	0, 1, 3, 5 to 8, 11	Setting this parameter to "7, 8" enables the brake sequence function.
639	0 (initial value)	Brake opening by output current
	1	Brake opening by motor torque
640	0 (initial value)	Brake closing operation by frequency command
	1	Brake closing operation by the actual motor rotation speed (estimated value)
641	0 (initial value)	Normal operation when the RT signal is ON
	7	Second brake sequence 1 when the RT signal is ON
	8	Second brake sequence 2 when the RT signal is ON
	9999	First brake sequence 1 is valid when the RT signal is ON

*2 The speed deviation excess detection frequency is used when vector control is performed.

Avoiding motor overrunning Vector

Pr.	GROUP	Name	Pr.	GROUP	Name
285	H416	Speed deviation excess detection frequency	853	H417	Speed deviation time
873	H415	Speed limit			

- Speed deviation excess detection (**Pr.285**, **Pr.853**)

When the difference (absolute value) between the speed command value and actual rotation speed in speed control under vector control is equal to or higher than the setting value in **Pr.285 Speed deviation excess detection frequency** for a continuous time equal to or longer than the setting value in **Pr.853 Speed deviation time**, Speed deviation excess detection (E.OSD) activates to shut off the inverter output.

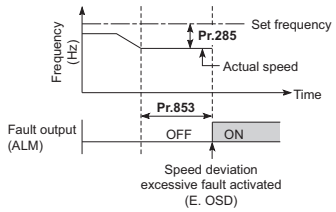

- Speed limit (**Pr.873**)
  This function prevents overrunning even when the setting value for the number of encoder pulses and the value of the actual number of pulses are different. When the setting value for the number of encoder pulses is lower than the actual number of pulses, because the motor may increase speed, the output frequency is limited with the frequency of (set frequency + **Pr.873**).

Droop control

Magnetic flux Sensorless Vector PM

Pr.	GROUP	Name	Pr.	GROUP	Name
286	G400	Droop gain	287	G401	Droop filter time constant
288	G402	Droop function activation selection	679	G420	Second droop gain
680	G421	Second droop filter time constant	681	G422	Second droop function activation selection
682	G423	Second droop break point gain	683	G424	Second droop break point torque
994	G403	Droop break point gain	995	G404	Droop break point torque

This is a function to give droop characteristics to the speed by balancing the load in proportion with the load torque.
This is effective when balancing the load when using multiple inverters.

Pr.	Setting range	Description
286	0 (initial value)	Droop control disabled
	0.1 to 100%	Set the droop amount at the rated torque as % value of the rated motor frequency.
287	0 to 1 s	Set the filter time constant to apply to the current for torque.

Pr.	Setting range	Description	
288	0 (initial value)	Without droop control during acceleration/ deceleration (With 0 limit)	The **Pr.84** setting is the droop compensation reference.
	1*1	Constantly droop control during operation (With 0 limit)	
	2*1	Constantly droop control during operation (Without 0 limit)	
	10*1	Without droop control during acceleration/ deceleration (With 0 limit)	Motor speed is the droop compensation reference.
	11*1	Constantly droop control during operation (With 0 limit)	
	20*1	Without droop control during acceleration/ deceleration (With 0 limit)	The **Pr.1121** setting is the droop compensation reference.
	21*1	Constantly droop control during operation (With 0 limit)	
	22*1	Constantly droop control during operation (Without 0 limit)	
994	0.1 to 100%	Set the droop amount to be changed as % value of the rated motor frequency.	
	9999 (initial value)	No function	
995	0.1 to 100%	Set the torque when the droop amount is to be changed.	

*1 Under Advanced magnetic flux vector control, the operation is the same with setting the parameter to "0".

- Droop control
  Droop control is enabled for Advanced magnetic flux vector control, Real sensorless vector control, vector control, and PM sensorless vector control when **Pr.286** is not "0".
  The upper limit of the droop compensation frequency is 120 Hz.
- Turning ON the RT signal enables the second droop control.

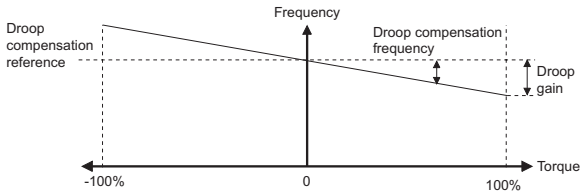

- Break point setting for droop control **(Pr.994, Pr.995)**
  Set **Pr.994** and **Pr.995** to have a break point on a droop compensation frequency line. Setting a break point allows the inverter to raise the droop compensation frequency for light-load (no load) operation without raising it for heavy-load operation.

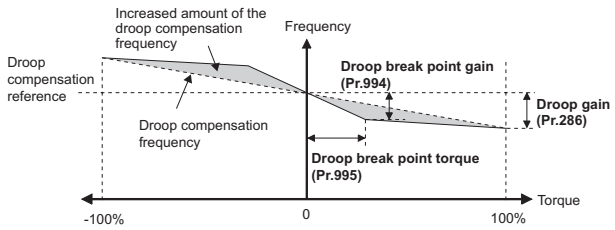

Pr. 289 Refer to the page on Pr.190.
Pr. 290 Refer to the page on Pr.52.

Pulse train input/output

Pr.	GROUP	Name	Pr.	GROUP	Name
291	D100	Pulse train I/O selection	384	D101	Input pulse division scaling factor
385	D110	Frequency for zero input pulse	386	D111	Frequency for maximum input pulse

A pulse train input to terminal JOG can be used to set the inverter's speed command.
The pulse train can be output from terminal FM by the open collector output system.
Speed synchronized operation of an inverter can be performed by using the pulse train input/output together with terminal JOG.

Pr.291 setting	Input (Terminal JOG)	Output (Terminal FM)
0 (initial value)	JOG signal *2	FM output *3
1	Pulse train input	FM output *3
10 *3	JOG signal *2	Pulse train output (50% duty)
11 *3	Pulse train input	
20 *3	JOG signal *2	Pulse train output (ON width fixed)
21 *3	Pulse train input	
100 *3		Pulse train output (ON width fixed) *1

*1 Regardless of the **Pr.54** setting, the signal input as a pulse train is output as it is.
*2 The function is assigned in **Pr.185 JOG terminal function selection**.
*3 Only the FM type inverters support the pulse train output.

- Changing the frequency at pulse train input (**Pr.385, Pr.386**)

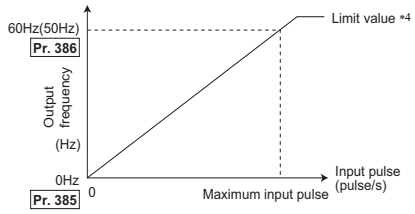

*4 Limit value = (**Pr.386** - **Pr.385**) 1.1 + **Pr.385**

- How to calculate the input pulse division scaling factor (**Pr.384**)
  Maximum number of pulses (pulse/s) = **Pr.384** × 400
  (Allowable maximum number of pulses = 100k pulses/s)
- If **Pr.419 Position command source selection** = "2" (simple pulse train position command) is set, terminal JOG is used for the simple position pulse train input regardless of the **Pr.291 Pulse train I/O selection** setting.

Pr. 292, 293 Refer to the page on Pr.61.
Pr. 294 Refer to the page on Pr.261.
Pr. 295 Refer to the page on Pr.161.

Password function

Pr.	GROUP	Name	Pr.	GROUP	Name
296	E410	Password lock level	297	E411	Password lock/ unlock

Registering a 4-digit password can restrict parameter reading/ writing.

- Level of reading/writing restriction by PU/NET mode operation command can be selected by **Pr.296**.

Pr.296 setting	PU mode operation command		NET mode operation command			
			RS-485 terminals		Communication option	
	Read	Write	Read	Write	Read	Write
9999 (initial value)	○	○	○	○	○	○
0, 100	×	×	×	×	×	×
1, 101	○	×	○	×	○	×
2, 102	○	×	○	○	○	○
3, 103	○	○	○	×	○	×
4, 104	×	×	×	×	○	×
5, 105	×	×	○	○	○	○
6, 106	○	○	×	×	○	×
99, 199	Only the parameters registered in the user group can be read/written. (For the parameters not registered in the user group, the same restriction level as "4, 104" applies.)					

○: Enabled, ×: Disabled

Pr. 297 setting	Description
1000 to 9998	Register a 4-digit password.*1
(0 to 5)*2	Displays password unlock error count. (Reading only) (Valid when **Pr.296** = "100 to 106")
9999 (initial value)	No password lock

*1 If the password is forgotten, it can be unlocked with all parameter clear, but doing so will also clear the other parameters.
*2 When **Pr.297** = "0, 9999", writing is always enabled, but setting is disabled. (The display cannot be changed.)

Pr. 298 Refer to the page on Pr.81.
Pr. 299 Refer to the page on Pr.57.
Pr. 331 to 337 Refer to the page on Pr.117.

Start command source and frequency command source during communication operation

Pr.	GROUP	Name	Pr.	GROUP	Name
338	D010	Communication operation command source	339	D011	Communication speed command source
550	D012	NET mode operation command source selection	551	D013	PU mode operation command source selection

The operation and speed commands from an external device can be enabled during Network operation. The operation command source in the PU operation mode can also be selected.

Pr.	Setting range	Description
338	0 (initial value)	Start command source is communication.
	1	Start command source is external.
339	0 (initial value)	Frequency command source is communication.
	1	Frequency command source is external.
	2	Frequency command source is external. (When there is no external input, the frequency command via communication is valid, and the frequency command from terminal 2 is invalid.)
550	0	The communication option is the command source when in the NET operation mode.
	1*1	The RS-485 terminals are the command source when in the NET operation mode.
	5*2	The Ethernet connector is the command source when in the NET operation mode.
	9999 (initial value)	Communication option is recognized automatically. Normally, the RS-485 terminals*3 are the command source. When the communication option is mounted, the communication option is the command source.
551	1*1	The RS-485 terminals are the command source when in the PU operation mode.
	2	The PU connector is the command source when in the PU operation mode.
	3	The USB connector is the command source when in the PU operation mode.
	5*2	The Ethernet connector is the command source when in the PU operation mode.
	9999 (initial value)	USB automatic recognition. Normally, the PU connector is the command source. When the USB is connected, the USB connector is the command source.

*1 The setting is not used for the FR-A800-E.
*2 The setting is available for the FR-A800-E only.
*3 Ethernet connector for the FR-A800-E

Pr. 340 Refer to the page on Pr.79.
Pr. 341 to 343 Refer to the page on Pr.117.

Orientation control

V/F Magnetic flux Vector

Pr.	GROUP	Name	Pr.	GROUP	Name
350	A510	Stop position command selection	351	A526	Orientation speed
352	A527	Creep speed	353	A528	Creep switchover position
354	A529	Position loop switchover position	355	A530	DC injection brake start position
356	A531	Internal stop position command	357	A532	Orientation in-position zone
358	A533	Servo torque selection	359	C141	Encoder rotation direction
360	A511	16-bit data selection	361	A512	Position shift
362	A520	Orientation position loop gain	363	A521	Completion signal output delay time
364	A522	Encoder stop check time	365	A523	Orientation limit
366	A524	Recheck time	369	C140	Number of encoder pulses
393	A525	Orientation selection	394	A540	Number of machine side gear teeth
395	A541	Number of motor side gear teeth	396	A542	Orientation speed gain (P term)
397	A543	Orientation speed integral time	398	A544	Orientation speed gain (D term)
399	A545	Orientation deceleration ratio	829	A546	Number of machine end encoder pulses
851	C240	Control terminal option-Number of encoder pulses	852	C241	Control terminal option-Encoder rotation direction
862	C242	Encoder option selection			

The inverter can adjust the stop position (Orientation control) using an encoder attached to a place such as the main shaft of the machine.
An orientation control compatible option is required.

- Internal stop position command
  When "0" is set in **Pr.350 Stop position command selection**, the internal position command mode is activated.
  In the internal position command mode, the setting value of **Pr.356 Internal stop position command** is used as the stop position.
- Internal stop position command
  When **Pr.350 Stop position command selection** is set to "1" and the FR-A8AX is used, 16-bit data (binary input) is used to give the stop position.
- Operation timing chart

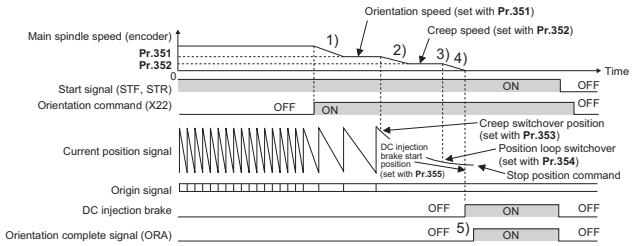

- Using the FR-A8TP (motor end) together with the plug-in option FR-A8AP/FR-A8AL/FR-A8APR (machine end) enables machine end orientation control.
  Setting **Pr.862** = "1" enables machine end orientation.
  When only the FR-A8AL is used, machine end orientation control is enabled by setting the number of machine end encoder pulses in **Pr.829**.

Encoder feedback control

V/F Magnetic flux

Pr.	GROUP	Name	Pr.	GROUP	Name
359	C141	Encoder rotation direction	367	G240	Speed feedback range
368	G241	Feedback gain	369	C140	Number of encoder pulses
144	M002	Speed setting switchover	285	A107	Overspeed detection frequency
851	C240	Control terminal option-Number of encoder pulses	852	C241	Control terminal option-Encoder rotation direction

By detecting the rotation speed of the motor with the encoder and feeding it back to the inverter, output frequency of the inverter is controlled to keep the speed of the motor constant even for the load change.
A vector control compatible option is required.

- Using **Pr.359 Encoder rotation direction** and **Pr.369 Number of encoder pulses**, set the rotation direction and the number of pulses for the encoder.
- When a value other than "9999" is set in **Pr.367 Speed feedback range**, encoder feedback control is valid.
  Using the set point (frequency at which stable speed operation is performed) as reference, set the higher and lower setting range. Normally, set the frequency converted from the slip amount (r/min) of the rated motor speed (rated load). If the setting is too large, response becomes slow.

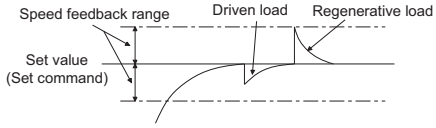

- Set **Pr.368 Feedback gain** when the rotation is unstable or response is slow.

Pr.368 setting	Description
Pr.368 > 1	Response will become faster but it may cause overcurrent or become unstable.
1 > Pr.368	Response will become slower but it will become more stable.

Motor overspeeding detection

Pr.	GROUP	Name
374	H800	Overspeed detection level

If the motor rotation speed exceeds the speed set in **Pr.374** during encoder feedback control, Real sensorless vector control, vector control or PM sensorless vector control, Overspeed occurrence (E.OS) occurs, the inverter output is shut off.

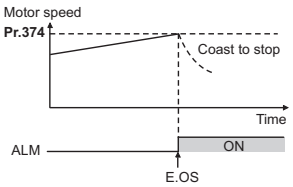

Signal loss detection of encoder signals

V/F Magnetic flux Vector

Pr.	GROUP	Name	Pr.	GROUP	Name
376	C148	Encoder signal loss detection enable/ disable selection	855	C248	Control terminal option-Signal loss detection enable/ disable selection

If encoder signals are disconnected during encoder feedback control, orientation control or vector control, Signal loss detection (E.ECT) is turned ON to shut off the inverter output.

Pr.380 to 383 Refer to the page on Pr.29.
Pr.384 to 386 Refer to the page on Pr.291.
Pr.393 to 399 Refer to the page on Pr.350.

PLC function

Pr.	GROUP	Name	Pr.	GROUP	Name
414	A800	PLC function operation selection	415	A801	Inverter operation lock mode setting
416	A802	Pre-scale function selection	417	A803	Pre-scale setting value
498	A804	PLC function flash memory clear	675	A805	User parameter auto storage function selection
1150 to 1199	A810 to A859	User parameters 1 to User parameters 50			

The inverter can be run in accordance with a sequence program. In accordance with the machine specifications, a user can set various operation patterns: inverter movements at signal inputs, signal outputs at particular inverter statuses, and monitor outputs, etc.

Pr.	Setting range	Description		
414	0 (initial value)	PLC function disabled		
	1, 11	PLC function enabled	The SQ signal is enabled by input from a command source (external input terminal / communication).	
	2, 12		The SQ signal is enabled by input from an external input terminal.	
415	0 (initial value)	The inverter start command is enabled regardless of the operating status of the sequence program.		
	1	The inverter start command is enabled only while the sequence program is running.		
416	0 to 5	Unit scale factor 0: No function 1: x 1 2: x 0.1 3: x 0.01 4: x 0.001 5: x 0.0001	When the pulse train is input from terminal JOG, the number of sampled pulses can be converted. The result of conversion is stored to SD1236. "Number of sampled pulses" = "input pulse value per count cycle" x "pre-scale setting value (**Pr.417**)" x "unit scale factor (**Pr.416**)"	
417	0 to 3267	Pre-scale setting value		
498	0 to 9999	0: Clears the flash memory fault display (no operation after writing while the flash memory is in normal operation).		Write
		9696: Clears the flash memory (no operation Write after writing during flash memory fault).		
		Other than 0 and 9696: Outside of the setting range		
		0: Normal display		Read
		1: The flash memory has not been cleared because the PLC function is enabled.		
		9696: During flash memory clearing operation or flash memory fault		
675	1	Auto storage function enabled		
	9999 (initial value)	Auto storage function disabled		

Pr.	Setting range	Description
1150 to 1199	0 to 65535	Desired values can be set. Because devices D206 to D255 used by the PLC function can be mutually accessed, the values set to **Pr.1150** to **Pr.1199** can be used by the sequence program. The result of performing calculation by a sequence program can also be monitored by **Pr.1150** to **Pr.1199**.

- Switch the execution key (RUN/STOP) of the sequence program by turning the SQ signal ON/OFF. The sequence program can be executed by turning the SQ signal ON. To input the SQ signal, set "50" in any of **Pr.178** to **Pr.189** (**input terminal function selection**) to assign the function to a terminal.
- To write to the sequence program, use FR Configurator2 on a personal computer that is connected to the inverter via RS-485 communication.
- This function copies the PLC function project data to a USB memory device.
  The PLC function project data copied in the USB memory device can be copied to other inverters. This function is useful in backing up the parameter setting and for allowing multiple inverters to operate by the same sequence programs.

Simple positioning function by parameters Vector PM

Pr.	GROUP	Name	Pr.	GROUP	Name
419	B000	Position command source selection	464	B020	Digital position control sudden stop deceleration time
465	B021	First target position lower 4 digits	466	B022	First target position upper 4 digits
467	B023	Second target position lower 4 digits	468	B024	Second target position upper 4 digits
469	B025	Third target position lower 4 digits	470	B026	Third target position upper 4 digits
471	B027	Fourth target position lower 4 digits	472	B028	Fourth target position upper 4 digits
473	B029	Fifth target position lower 4 digits	474	B030	Fifth target position upper 4 digits
475	B031	Sixth target position lower 4 digits	476	B032	Sixth target position upper 4 digits
477	B033	Seventh target position lower 4 digits	478	B034	Seventh target position upper 4 digits
479	B035	Eighth target position lower 4 digits	480	B036	Eighth target position upper 4 digits
481	B037	Ninth target position lower 4 digits	482	B038	Ninth target position upper 4 digits
483	B039	Tenth target position lower 4 digits	484	B040	Tenth target position upper 4 digits
485	B041	Eleventh target position lower 4 digits	486	B042	Eleventh target position upper 4 digits
487	B043	Twelfth target position lower 4 digits	488	B044	Twelfth target position upper 4 digits
489	B045	Thirteenth target position lower 4 digits	490	B046	Thirteenth target position upper 4 digits
491	B047	Fourteenth target position lower 4 digits	492	B048	Fourteenth target position upper 4 digits
493	B049	Fifteenth target position lower 4 digits	494	B050	Fifteenth target position upper 4 digits
1221	B101	Start command edge detection selection	1222	B120	First positioning acceleration time
1223	B121	First positioning deceleration time	1224	B122	First positioning dwell time
1225	B123	First positioning sub-function	1226	B124	Second positioning acceleration time
1227	B125	Second positioning deceleration time	1228	B126	Second positioning dwell time
1229	B127	Second positioning sub-function	1230	B128	Third positioning acceleration time
1231	B129	Third positioning deceleration time	1232	B130	Third positioning dwell time
1233	B131	Third positioning sub-function	1234	B132	Fourth positioning acceleration time
1235	B133	Fourth positioning deceleration time	1236	B134	Fourth positioning dwell time
1237	B135	Fourth positioning sub-function	1238	B136	Fifth positioning acceleration time
1239	B137	Fifth positioning deceleration time	1240	B138	Fifth positioning dwell time
1241	B139	Fifth positioning sub-function	1242	B140	Sixth positioning acceleration time
1243	B141	Sixth positioning deceleration time	1244	B142	Sixth positioning dwell time
1245	B143	Sixth positioning sub-function	1246	B144	Seventh positioning acceleration time
1247	B145	Seventh positioning deceleration time	1248	B146	Seventh positioning dwell time
1249	B147	Seventh positioning sub-function	1250	B148	Eighth positioning acceleration time
1251	B149	Eighth positioning deceleration time	1252	B150	Eighth positioning dwell time
1253	B151	Eighth positioning sub-function	1254	B152	Ninth positioning acceleration time
1255	B153	Ninth positioning deceleration time	1256	B154	Ninth positioning dwell time
1257	B155	Ninth positioning sub-function	1258	B156	Tenth positioning acceleration time
1259	B157	Tenth positioning deceleration time	1260	B158	Tenth positioning dwell time
1261	B159	Tenth positioning sub-function	1262	B160	Eleventh positioning acceleration time

Pr.	GROUP	Name	Pr.	GROUP	Name
1263	B161	Eleventh positioning deceleration time	1264	B162	Eleventh positioning dwell time
1265	B163	Eleventh positioning sub-function	1266	B164	Twelfth positioning acceleration time
1267	B165	Twelfth positioning deceleration time	1268	B166	Twelfth positioning dwell time
1269	B167	Twelfth positioning sub-function	1270	B168	Thirteenth positioning acceleration time
1271	B169	Thirteenth positioning deceleration time	1272	B170	Thirteenth positioning dwell time
1273	B171	Thirteenth positioning sub-function	1274	B172	Fourteenth positioning acceleration time
1275	B173	Fourteenth positioning deceleration time	1276	B174	Fourteenth positioning dwell time
1277	B175	Fourteenth positioning sub-function	1278	B176	Fifteenth positioning acceleration time
1279	B177	Fifteenth positioning deceleration time	1280	B178	Fifteenth positioning dwell time
1281	B179	Fifteenth positioning sub-function	1282	B180	Home position return method selection
1283	B181	Home position return speed	1284	B182	Home position return creep speed
1285	B183	Home position shift amount lower 4 digits	1286	B184	Home position shift amount upper 4 digits
1287	B185	Travel distance after proximity dog ON lower 4 digits	1288	B186	Travel distance after proximity dog ON upper 4 digits
1289	B187	Home position return stopper torque	1290	B188	Home position return stopper waiting time
1292	B190	Position control terminal input selection	1293	B191	Roll feeding mode selection

Set positioning parameters such as the number of pulses (position) and acceleration/deceleration time in advance to create a point table (point table method). Positioning operation is performed by selecting the point table.

- Positioning operation by point tables, example 1 (automatic continuous positioning operation)
  The figure below shows an operation example when the following settings are made for point tables.

Point table	Target position		Maximum speed (Hz)	Acceleration time (s)	Deceleration time (s)	Dwell time (ms)	Auxiliary function
	Upper	Lower					
1	100	0	60	5	5	1000	1 (absolute position, continuous)
2	50	0	30	6	6	0	10 (incremental position, individual)

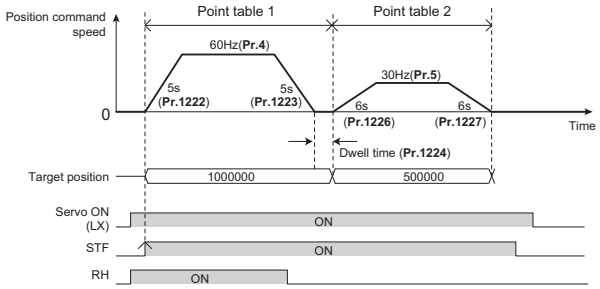

9 Explanations of Parameters

- Selecting the home position return method (**Pr.1282 to Pr.1288**)

Pr.1282 Setting	Home position return method	Description
0	Dog type *1 Vector	Deceleration starts when the proximity dog signal is turned ON. For the home position after turn OFF of the proximity dog signal, the position specified by the first Z-phase signal or the position of the first Z-phase signal shifted by the home position shift amount (**Pr.1285**, **Pr.1286**) is used.
1	Count type *1 Vector	Deceleration starts when the proximity dog signal is turned ON. After the proximity dog, the motor travels the specified travel distance (**Pr.1287**, **Pr.1288**). Then, it uses the position specified by the first Z-phase signal or position of the Z-phase signal shifted by the home position shift amount (**Pr.1285**, **Pr.1286**).
2	Data set type Vector PM	The position at which the start signal is input is used as the home position.
3	Stopper type Vector PM	A workpiece is pressed to a mechanical stopper, and the position where it is stopped is set as the home position. Pressing is confirmed when the estimated speed value has fallen blow **Pr.865 Low speed detection** for 0.5 s during activation of the torque limit operation. (While the stopper-type home position is performed, **Pr.1289 Home position return stopper torque** is applied.) After **Pr.1290 Home position return stopper waiting time** has passed after pressing is confirmed, the home position is shifted by the home position shift amount (**Pr.1285** and **Pr.1286**). After a position command is created and the absolute value of the droop pulse (after electronic gear) falls below the in-position width, the home position return is completed.
4 (initial value)	Ignoring the home position (Servo ON position as the home position) Vector PM	The serve ON position is used as the home position.
5	Dog type back end reference Vector PM	Deceleration starts at the front end of the proximity dog. After the back end is passed, the position is shifted by the post-dog travel distance and home position shift amount. The position after the shifts is set as the home position. Set pulses required for deceleration from the creep speed or more as the total of the postdog travel distance and home position shift amount.
6	Count type front end reference Vector PM	Deceleration starts at the front end of the proximity dog, and the position is shifted by the postdog travel distance and home position shift distance. The position after the shifts is set as the home position. Set pulses required for changing the speed from the home position speed to the creep speed or more as the total of the post-dog travel distance and home position shift amount.

*1 If it is set under PM sensorless vector control, Home position return parameter setting error (HP3) occurs.

Position control by pulse train input

Vector PM

Pr.	GROUP	Name	Pr.	GROUP	Name
419	B000	Position command source selection	428	B009	Command pulse selection
429	B010	Clear signal selection	430	B011	Pulse monitor selection
635	M610	Cumulative pulse clear signal selection	636	M611	Cumulative pulse division scaling factor
637	M612	Control terminal option-Cumulative pulse division scaling factor	638	M613	Cumulative pulse storage

Pr.419 Setting	Position command selection	The home position retention selection when the LX signal OFF (servo-OFF)	Selecting clearing of the current position 2 monitor value *1: When home position return is completed	Selecting clearing of the current position 2 monitor value *1: When position control is switched to other control mode	Absolute position control
0(initial value)	Simple position control by point tables (position command by setting parameters).	Not retained	Not cleared	Cleared	Disabled
1	Position command by the pulse train input to the FR-A8AL *2	Not retained	-*3	Cleared	Disabled
2	Simple pulse train position command by the pulse train input to the inverter	Not retained	-*3	Cleared	Disabled
10	Simple position control by point tables (position command by setting parameters).	Retained	Not cleared	Cleared	Disabled
100	Simple position control by point tables (position command by setting parameters).	Not retained	Cleared	Cleared	Disabled
110	Simple position control by point tables (position command by setting parameters).	Retained	Cleared	Cleared	Disabled
200	Simple position control by point tables (position command by setting parameters).	Not retained	Not cleared	Not cleared	Disabled
210	Simple position control by point tables (position command by setting parameters).	Retained	Not cleared	Not cleared	Disabled
300	Simple position control by point tables (position command by setting parameters).	Not retained	Cleared	Not cleared	Disabled
310	Simple position control by point tables (position command by setting parameters).	Retained	Cleared	Not cleared	Disabled
1110	Simple position control by point tables (position command by setting parameters).	Retained	Cleared	Cleared	Enabled (with the FR-A8APS installed) *4
1310	Simple position control by point tables (position command by setting parameters).	Retained	Cleared	Not cleared	Enabled (with the FR-A8APS installed) *4

*1 Timing to clear the current position 2 monitor value differs depending on the setting value.
*2 During position control under Vector control, if **Pr.419** = "1" while the FR-A8AL is not installed (or is disabled), the protective function (E.OPT) is activated.
*3 The home position return is not available.
*4 During position control under Vector control, if **Pr.419** = "1110 or 1310" while the FR-A8APS is not installed (or is disabled), a protective function (E.OPT) is activated.

- Select the command pulse train with **Pr.428**.
- If the Pre-excitation/servo ON (LX) signal is turned ON, output shutoff is canceled and the Position control preparation ready (RDY) signal is turned ON after 0.1 s. Turning ON STF (forward rotation stroke end signal) or STR (reverse rotation stroke end signal) rotates the motor according to the command pulse. If the forward (reverse) rotation stroke end signal is turned OFF, the motor does not rotate in the corresponding direction.

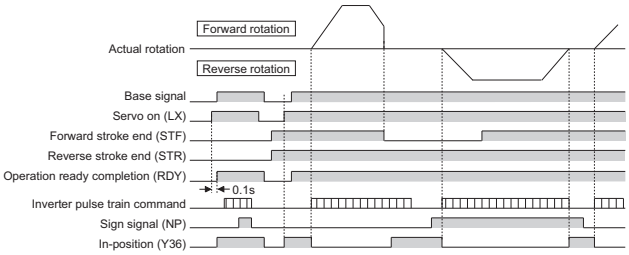

Electronic gear setting under position control Vector PM

Pr.	GROUP	Name	Pr.	GROUP	Name
420	B001	Command pulse scaling factor numerator (electronic gear numerator)	421	B002	Command pulse multiplication denominator (electronic gear denominator)
424	B005	Position command acceleration/ deceleration time constant			

Set the gear ratio between the machine gear and motor gear.

Pr.	Setting range	Description
420	0 to 32767	Set the electronic gear. **Pr.420** is the numerator and **Pr.421** is the denominator.
421		
424	0 to 50 s	Use it when the rotation is not smooth because the electronic gear ratio is large (10 times or larger) and the rotation speed is slow.

Position control gain adjustment Vector PM

Pr.	GROUP	Name	Pr.	GROUP	Name
422	B003	Position control gain	423	B004	Position feed forward gain
425	B006	Position feed forward command filter	446	B012	Model position control gain
1298	B013	Second position control gain			

- Adjust **Pr.422** when any of such phenomena as unusual vibration, noise and overcurrent of the motor/machine occurs. Increasing the setting improves traceability for the position command and also improves servo rigidity at a stop, but oppositely makes an overshoot and vibration more liable to occur.
- The function of **Pr.423** is to cancel a delay caused by the droop pulses in the deviation counter.
- The first delay filter for the feed forward command can be input in **Pr.425**.
- Use **Pr.446** to set the gain for the model position controller.
- Turning ON the RT signal enables the second position loop gain.

Position adjustment parameter Vector PM

Pr.	GROUP	Name	Pr.	GROUP	Name
426	B007	In-position width	427	B008	Excessive level error
1294	B192	Position detection lower 4 digits	1295	B193	Position detection upper 4 digits
1296	B194	Position detection selection	1297	B195	Position detection hysteresis width

- If the number of droop pulses is equal to or smaller than the **Pr.426** setting value, the In-position (Y36) signal turns ON.
- If the number of droop pulses exceeds the **Pr.427** setting, a position error is detected, Excessive position fault (E.OD) is activated and the inverter output is shut off.
- If the current position (before the electronic gear) exceeds the detected position (**Pr.1294** + **Pr.1295**), the Position detected signal (FP) turns ON.
- Use **Pr.1296 Position detection selection** to determine whether to detect a position in the positive position range or in the negative position range.

Pr. 428, 429 Refer to the page on Pr.419.
Pr. 446 Refer to the page on Pr.422.
Pr. 450 Refer to the page on Pr.71.
Pr. 451 Refer to the page on Pr.80.
Pr. 453, 454 Refer to the page on Pr.80.
Pr. 455 to 463 Refer to the page on Pr.82.

Remote output function

Pr.	GROUP	Name	Pr.	GROUP	Name
495	M500	Remote output selection	496	M501	Remote output data 1
497	M502	Remote output data 2			

The inverter output signals can be turned ON/OFF instead of the remote output terminals of a programmable controller.

Pr.	Setting range	Description	
495	0 (initial value)	Remote output data is cleared when the power supply is turned OFF.	Remote output data is cleared during an inverter reset.
	1	Remote output data is retained when the power supply is turned OFF.	
	10	Remote output data is cleared when the power supply is turned OFF.	Remote output data is retained during an inverter reset.
	11	Remote output data is retained when the power supply is turned OFF.	
496	0 to 4095	Refer to the diagram below. (Even if **Pr.77 Parameter write selection** is set to "0 (initial value)", the setting value can be changed regardless whether the inverter is running or not or of the operation mode.)	
497	0 to 4095		

<Remote output data>

Pr.496

b11											b0
*1	*1	*1	*1	*1	ABC2	ABC1	FU	OL	IPF	SU	RUN

Pr.497

b11											b0
*1	*1	RA3 *3	RA2 *3	RA1 *3	Y6 *2	Y5 *2	Y4 *2	Y3 *2	Y2 *2	Y1 *2	Y0 *2

*1 Any value.
*2 Y0 to Y6 are available when the extension output option (FR-A8AY) is installed.
*3 RA1 to RA3 are available hen the relay output option (FR-A8AR) is installed.

Maintenance timer warning

Pr.	GROUP	Name	Pr.	GROUP	Name
503	E710	Maintenance timer 1	504	E711	Maintenance timer 1 warning output set time
686	E712	Maintenance timer 2	687	E713	Maintenance timer 2 warning output set time
688	E714	Maintenance timer 3	689	E715	Maintenance timer 3 warning output set time

The maintenance timer output signal (Y95) is output when the inverter's cumulative energization time reaches the time period set with the parameter. MT1, MT2 or MT3 is displayed on the operation panel (FR-DU08).
This can be used as a guideline for the maintenance time of peripheral devices.

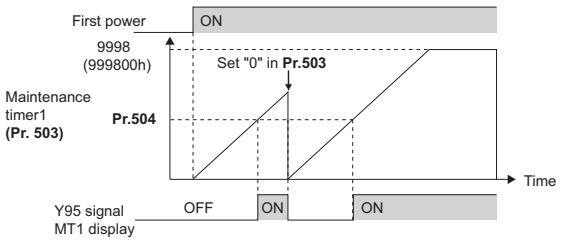

Operation example of the maintenance timer 1 (**Pr.503, Pr.504**) (with both MT2 and MT3 OFF)

- The cumulative energization time of the inverter is stored in the EEPROM every hour and displayed in **Pr.503 (Pr.686, Pr.688)** in 100 h increments. **Pr.503 (Pr.686, Pr.688)** is clamped at 9998 (999800 h).

Pr. 516 to 519 Refer to the page on Pr.29.

Output stop function

Pr.	GROUP	Name
522	G105	Output stop frequency

The motor coasts to a stop (inverter output shutoff) when inverter output frequency falls to **Pr. 522** setting or lower.

Pr.522 setting	Description
0 to 590 Hz	Set the frequency to start coasting to a stop (output shutoff).
9999 (initial value)	No function

- When both of the frequency setting signal and output frequency falls to the frequency set in **Pr.522** or lower, the inverter stops the output and the motor coasts to a stop.

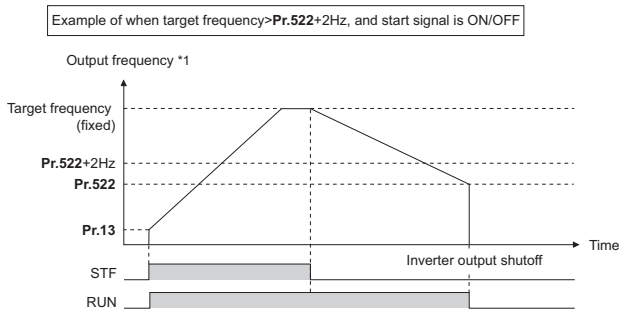

*1 The output frequency before the slip compensation is compared with the **Pr.522** setting.

- At a stop condition, the motor starts running when the frequency setting signal exceeds **Pr.522** +2Hz. The motor is accelerated at the **Pr.13 Starting frequency** (0.01Hz under IPM motor control) at the start.

USB device communication

Pr.	GROUP	Name	Pr.	GROUP	Name
547	N040	USB communication station number	548	N041	USB communication check time interval

Setup of the inverter can be easily performed with FR Configurator2 through the USB communication.

Pr.	Setting range	Description
547	0 to 31	Inverter station number specification
548	0	USB communication is possible, however the inverter will trip (E.USB) when the mode changes to the PU operation mode.
	0.1 to 999.8	Set the communication check time interval. If a no-communication state persists for longer than the permissible time, the inverter will trip (E.USB).
	9999 (initial value)	No communication check

Pr. 549 Refer to the page on Pr.117.
Pr. 550, 551 Refer to the page on Pr.338.
Pr. 552 Refer to the page on Pr.31.
Pr. 553, 554 Refer to the page on Pr.127.

Current average value monitor signal

Pr.	GROUP	Name	Pr.	GROUP	Name
555	E720	Current average time	556	E721	Data output mask time
557	E722	Current average value monitor signal output reference current			

The output current average value during constant-speed operation and the maintenance timer value are output to the current average value monitor signal (Y93) as a pulse.
The output pulse width can be used in a device such as the I/O module of a programmable controller as a guideline for the maintenance time for mechanical wear, belt stretching, or deterioration of devices with age.
The pulse is repeatedly output during constant-speed operation in cycles of 20 s to the Current average monitor signal (Y93).

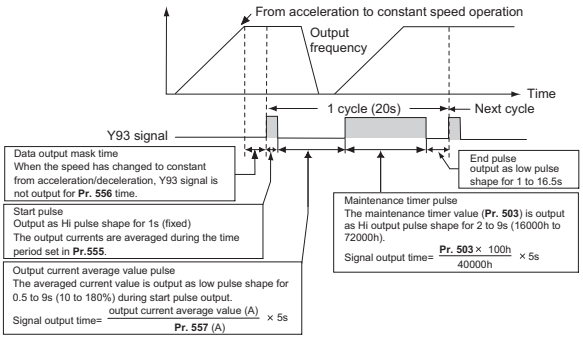

Pr. 560 Refer to the page on Pr.9.
Pr. 561 Refer to the page on Pr.82.
Pr. 563, 564 Refer to the page on Pr.52.
Pr. 569 Refer to the page on Pr.80.

Multiple rating setting

Pr.	GROUP	Name
570	E301	Multiple rating setting

Four rating types of different rated current and permissible load can be selected. The optimal inverter rating can be chosen in accordance with the application, enabling equipment size to be reduced.

Pr.570 setting	Description
0 *1	SLD rating 110% 60 s, 120% 3 s (inverse-time characteristics) Surrounding air temperature of 40°C
1	LD rating 120% 60 s, 150% 3 s (inverse-time characteristics) Surrounding air temperature of 50°C
2 (initial value)	ND rating 150% 60 s, 200% 3 s (inverse-time characteristics) Surrounding air temperature of 50°C
3 *1	HD rating 200% 60 s, 250% 3 s (inverse-time characteristics) Surrounding air temperature of 50°C

*1 Not compatible with the IP55 compatible model.

Pr. 571 Refer to the page on Pr.13.

Checking of current input on analog input terminal

Pr.	GROUP	Name	Pr.	GROUP	Name
573	A680 / T052	4 mA input check selection	777	A681 / T053	4 mA input check operation frequency
778	A682 / T054	4 mA input check filter			

When current is input to the analog input terminal 2 and terminal 4, operation when the current input has gone below the specified level (loss of analog current input) can be selected. It is possible to continue the operation even when the analog current input is lost.

Pr.	Setting range	Description
547	1	Continues the operation with output frequency before the current input loss.
	2	When the current input loss is detected, 4 mA input fault (E.LCI) is activated.
	3	Decelerates to stop when the current input loss is detected. After it is stopped, 4 mA input fault (E.LCI) is activated.
	4	Continues operation with the **Pr.777** setting.
	9999 (initial value)	No current input check
548	0 to 590 Hz	Set the running frequency for current input loss. (Valid when **Pr.573** = "4")
	9999 (initial value)	No current input check when **Pr.573** = "4"
778	0 to 10 s	Set the current input loss detection time.

Pr. 574 Refer to the page on Pr.95.
Pr. 575 to 577 Refer to the page on Pr.127.

Traverse function

Pr.	GROUP	Name	Pr.	GROUP	Name
592	A300	Traverse function selection	593	A301	Maximum amplitude amount
594	A302	Amplitude compensation amount during deceleration	595	A303	Amplitude compensation amount during acceleration
596	A304	Amplitude acceleration time	597	A305	Amplitude deceleration time

The traverse operation, which oscillates the frequency at a constant cycle, is available.

Pr.	Setting range	Description
592	0	Traverse function invalid
	1	Traverse function valid only in External operation mode
	2	Traverse function valid regardless of the operation mode
593	0 to 25%	Level of amplitude during traverse operation
594	0 to 50%	Compensation amount during amplitude inversion (from acceleration to deceleration)
595	0 to 50%	Compensation amount during amplitude inversion (from deceleration to acceleration)
596	0.1 to 3600 s	Time period of acceleration during traverse operation
597	0.1 to 3600 s	Time period of deceleration during traverse operation

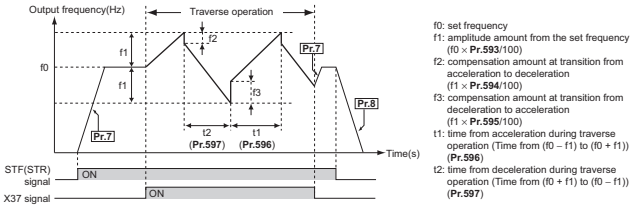

Varying the activation level of the undervoltage protective function

Pr.	GROUP	Name
598	H102	Undervoltage level

If the undervoltage protection (E.UVT) is activated due to unstable voltage in the power supply, the undervoltage level (DC bus voltage value) can be changed.

Pr. 598 setting	Description
175 to 215 VDC *1	Set the DC voltage value at which E.UVT occurs.
350 to 430 VDC *2	
9999 (initial value)	E.UVT occurs at 215 VDC (200 V class) / 430 VDC (400 V class).

*1 For the 200 V class
*2 For the 400 V class

Pr. 599 Refer to the page on Pr.30.
Pr. 600 to 604 Refer to the page on Pr.9.
Pr. 609, 610 Refer to the page on Pr.127.
Pr. 611 Refer to the page on Pr.57.
Pr. 639 to 648, 650, 651 Refer to the page on Pr.278.

Parallel operation communication check time (FR-A842-P)

Pr.	GROUP	Name
652	N092	Parallel operation communication check time

If the communication between the master and the slave is lost for a certain period, the inverter assumes it is in disconnection state and activates the protective function (E.SER) to shut off the output.

Pr. 652 setting	Description
0	Parallel operation communication disabled
0.1 to 120 s	Set the interval of the communication check (signal loss detection) time. If a no-communication state persists for the permissible time or longer, the inverter will trip.
9999	No communication check (signal loss detection)

Speed smoothing control V/F

Pr.	GROUP	Name	Pr.	GROUP	Name
653	G410	Speed smoothing control	654	G411	Speed smoothing cutoff frequency

The vibration (resonance) of the machine during motor operation can be suppressed.

- Set **Pr.653** to 100%, and check if the vibration is suppressed. If the vibration is not suppressed, raise the setting value of **Pr.653** gradually to minimize the vibration.
- When the vibrational frequency due to the mechanical resonance (fluctuation of torque, speed, and converter output voltage) is known using a tester and such, set 1/2 to 1 times of the vibrational frequency to **Pr.654**. (Setting vibrational frequency range can suppress the vibration better.)

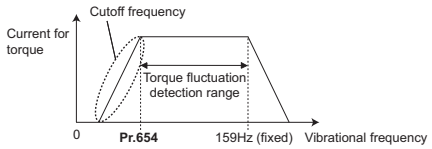

Analog remote output function

Pr.	GROUP	Name	Pr.	GROUP	Name
655	M530	Analog remote output selection	656	M531	Analog remote output 1
657	M532	Analog remote output 2	658	M533	Analog remote output 3
659	M534	Analog remote output 4			

An analog value can be output from the analog output terminal.

Pr. 655 setting	Description	
0 (initial value)	Remote output data is cleared when the power supply is turned OFF.	Remote output data is cleared during an inverter reset.
1	Remote output data is retained when the power supply is turned OFF.	
10	Remote output data is cleared when the power supply is turned OFF.	Remote output data is retained during an inverter reset.
11	Remote output data is retained when the power supply is turned OFF.	

Terminals FM/CA, AM and the analog output terminal of the option FR-A8AY can output the values set in **Pr.656 to Pr.659** (Analog remote output).

When **Pr.54 FM/CA terminal function selection** = "87, 88, 89, or 90" (remote output), the FM type inverter can output a pulse train from terminal FM.

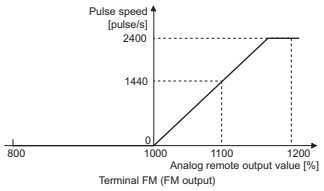

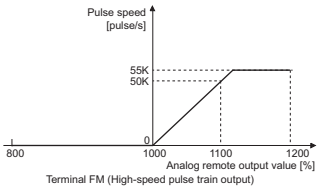

When **Pr.54 FM/CA terminal function selection** = "87, 88, 89, or 90" (remote output), the CA type inverter can output any analog current from terminal CA.

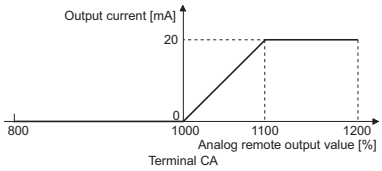

When **Pr.158 AM terminal function selection** = "87, 88, 89, or 90", an analog voltage can be output from terminal AM.

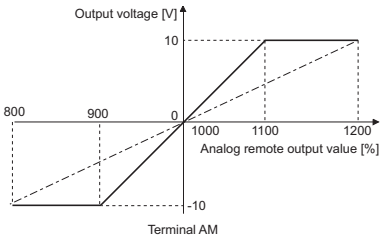

Increased magnetic excitation deceleration

V/F Magnetic flux Sensorless Vector

Pr.	GROUP	Name	Pr.	GROUP	Name
660	G130	Increased magnetic excitation deceleration operation selection	661	G131	Magnetic excitation increase rate
662	G132	Increased magnetic excitation current level			

Increase the loss in the motor by increasing the magnetic flux at the time of deceleration. Deceleration time can be reduced by suppressing the stall prevention (overvoltage) (oL).
It will make possible to reduce the deceleration time without a brake resistor. (Usage can be reduced if a brake resistor is used.)

Pr.	Setting range	Description
660	0 (initial value)	Without increased magnetic excitation deceleration
	1	With increased magnetic excitation deceleration
661	0 to 40%	Set the increase of magnetic excitation.
	9999 (initial value)	Magnetic excitation increase rate 10% under V/F control and Advanced magnetic flux vector control
		Magnetic excitation increase rate 0% under Real sensorless vector control and vector control
662	0 to 300%	The increased magnetic excitation rate is automatically lowered when the output current exceeds the setting value at the time of increased magnetic excitation deceleration.

- Setting of increased magnetic excitation rate **(Pr.660, Pr.661)**
  When the DC bus voltage exceeds the increased magnetic excitation deceleration operation level during the deceleration, excitation is increased in accordance with the setting value in **Pr.661**.

Inverter	Increased magnetic excitation deceleration operation level
200 V class	340 V
400 V class	680 V
With 500 V input	740 V

Surrounding air temperature change monitoring

Pr.	GROUP	Name
663	M060	Control circuit temperature signal output level

Turn ON/OFF the control circuit temperature signal (Y207) according to the result of comparison between the **Pr.663** setting and the monitored value of the control circuit temperature.

Pr.665 Refer to the page on Pr.882.
Pr.668 Refer to the page on Pr.261.

SF-PR slip amount adjustment mode

V/F

Pr.	GROUP	Name	Pr.	GROUP	Name
673	G060	SF-PR slip amount adjustment operation selection	674	G061	SF-PR slip amount adjustment gain

As compared to our conventional SF-JR motor, the slip amount is small for the high-performance energy-saving SF-PR motor. When replacing the SF-JR to the SF-PR, the slip amount is reduced and the rotations per minute increases. Therefore, when the SF-PR is used with the same frequency setting as that of the SF-JR, power consumption may increase as compared to the SF-JR.
By setting the slip amount adjustment mode, the frequency command can be adjusted to keep the rotations per minute of the SF-PR equivalent to those of the SF-JR for power consumption reduction. (This function is not available on the FR-A842-P.)

Pr.	Setting range	Description
673	2, 4, 6	Set the number of SF-PR motor poles.
	9999 (initial value)	Slip amount adjustment mode invalid
674	0 to 500%	Setting is available for fine adjustment of the slip amount. To reduce the rotations per minute, set a larger value. To increase the rotations per minute, set a smaller value.

Pr.679 to 683 Refer to the page on Pr.286.
Pr.684 Refer to the page on Pr.82.
Pr.686 to 689 Refer to the page on Pr.503.

Deceleration check

Vector

Pr.	GROUP	Name
690	H881	Deceleration check time

This function can stop the inverter output when the motor is accelerated accidentally during operation.
This prevents a malfunction due to incorrect encoder pulse settings.

Pr. 690 setting	Description
0 to 3600 s	Set the time required to shut off output due to deceleration check after the start signal is OFF.
9999	No deceleration check

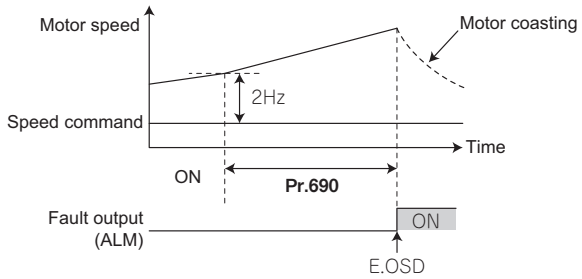

Pr.692 to 696 Refer to the page on Pr.9.
Pr.699 Refer to the page on Pr.178.
Pr.702, 706, 707, 711, 712, 717, 721, 724, 725, 738 to 746 Refer to the page on Pr.82.
Pr.747 Refer to the page on Pr.788.
Pr.753 to 759 Refer to the page on Pr.127.

PID pre-charge function

Pr.	GROUP	Name	Pr.	GROUP	Name
760	A616	Pre-charge fault selection	761	A617	Pre-charge ending level
762	A618	Pre-charge ending time	763	A619	Pre-charge upper detection level
764	A620	Pre-charge time limit	765	A656	Second pre-charge fault selection
766	A657	Second pre-charge ending level	767	A658	Second pre-charge ending time
768	A659	Second pre-charge upper detection level	769	A660	Second pre-charge time limit

This function is to drive the motor at a certain speed before starting PID control. This function is useful for a pump with a long hose. Without this function, PID control would start before the pump is filled with water, and proper control would not be performed.

Pr.	Setting range	Description
760	0 (initial value)	Fault indication with output shutoff immediately after a pre-charge fault occurs.
	1	Fault indication with deceleration stop after a pre-charge fault occurs.
761	0 to 100%	Set the measurement level to end the pre-charge operation.
	9999 (initial value)	Without pre-charge ending level
762	0 to 3600 s	Set the time to end the pre-charge operation.
	9999 (initial value)	Without pre-charge ending time
763	0 to 100%	Set the upper limit for the pre-charged amount. A pre-charge fault occurs when the measured value exceeds the setting during pre-charging.
	9999 (initial value)	Without pre-charge upper limit level
764	0 to 3600 s	Set the time limit for the pre-charge operation. A pre-charge fault occurs when the pre-charge time exceeds the setting.
	9999 (initial value)	Without pre-charge time limit

- Example of pre-charge operation
  When the measured amount reaches the pre-charge ending level (**Pr.761 Pre-charge ending level** ≠ "9999")The pre-charge operation ends when the measured value reaches the **Pr.761** setting or higher, then the PID control is performed.

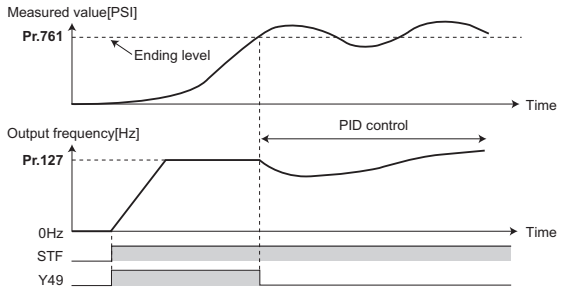

- Turning ON the RT signal enables the second pre-charge function.

Pr. 774 to 776 Refer to the page on Pr.52.
Pr. 779 Refer to the page on Pr.117.

Low-speed range torque characteristics selection PM

Pr.	GROUP	Name	Pr.	GROUP	Name
788	G250	Low speed range torque characteristic selection	747	G350	Second motor low-speed range torque characteristic selection

The torque characteristics in a low-speed range under PM sensorless vector control can be changed. (This function is not available on the FR-A842-P.)

Pr.	Setting range	Description
788	0	Disables the low-speed range torque characteristic (current synchronization operation).
	9999 (initial value) *1	Enables the low-speed range torque characteristic (high frequency superposition control)
747	0	Disables the low-speed range torque characteristic (current synchronization operation) while the RT signal is ON.
	9999 (initial value) *1	Enables the low-speed range torque characteristic (high frequency superposition control) while the RT signal is ON.

*1 The low-speed range high-torque characteristic (current synchronization operation) is disabled for PM motors other than MM-CF, even if "9999" is set.

- Use **Pr.747** to switch the torque characteristic according to the application or to switch among motors connected to one inverter.

Pr. 791, 792 Refer to the page on Pr.7.

Pulse train output of output power (Y79 signal)

Pr.	GROUP	Name
799	M520	Pulse increment setting for output power

After power ON or inverter reset, output signal (Y79 signal) is output in pulses every time accumulated output power, which is counted after the **Pr.799 Pulse increment setting for output power** is set, reaches the specified value (or its integral multiples).

Pr. 799 setting	Description
0.1 kWh, 1 kWh (initial value), 10 kWh, 100 kWh, 1000 kWh	Pulse train output of output power (Y79) is output in pulses at every output power (kWh) that is specified.

- The inverter continues to count the output power at retry function or when automatic restart after instantaneous power failure function works without power OFF of output power (power failure that is too short to cause an inverter reset), and it does not reset the count.
- If power failure occurs, output power is counted from 0 kWh again.
- Assign pulse output of output power (Y79: setting value 79 (positive logic), 179 (negative logic)) to any of **Pr.190 to Pr.196** (**Output terminal function selection**).

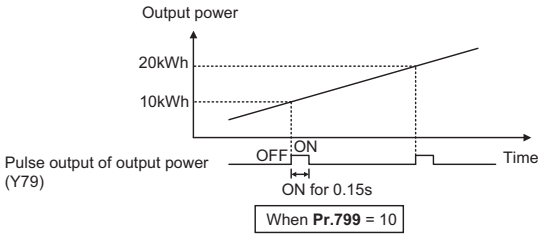

Pr. 800 Refer to the page on Pr.80.
Pr. 802 Refer to the page on Pr.10.

Torque command source selection

Sensorless Vector

Pr.	GROUP	Name	Pr.	GROUP	Name
801	H704	Output limit level	803	G210	Constant output range torque characteristic selection
804	D400	Torque command source selection	805	D401	Torque command value (RAM)
806	D402	Torque command value (RAM, EEPROM)	1114	D403	Torque command reverse selection
432	D120	Pulse train torque command bias	433	D121	Pulse train torque command gain

For torque control, the torque command source can be selected.

Pr.	Setting range	Description	
801	0 to 400%	Set the torque current limit level.	
	9999 (initial value)	The torque limit setting value is used for limiting the torque current level.	
803	0 (initial value), 10	Constant motor output command	In the torque command setting, select torque command for the constant output area.
	1, 11	Constant torque command	
	2	The torque is constant unless the output limit of the torque current is reached. (The torque current is limited.)	
804	0 (initial value)	Torque command based on the analog input to terminal 1	
	1	Torque command by the parameters Setting value of **Pr.805** or **Pr.806** (-400% to 400%)	
	2	Torque command by the pulse train input (FR-A8AL)	
	3	Torque command via CC-Link communication (FR-A8NC/FR-A8NCE/FR-A800-GF) Torque command via PROFIBUS-DP communication (FR-A8NP)	
	4	Digital input from the option (FR-A8AX)	
	5	Torque command via CC-Link communication (FR-A8NC/FR-A8NCE/FR-A800-GF) Torque command via PROFIBUS-DP communication (FR-A8NP)	
	6		
805	600 to 1400%	Torque command values can be set by setting **Pr.805** (RAM) and **Pr.806** (RAM, EEPROM). (Communication options can also be used for the setting.) In this case, set an appropriate value for the speed limit value to prevent overspeed.	
806	600 to 1400%		

- Torque command based on the analog input to terminal 1
  The following figure shows the torque command based on the analog input to terminal 1 according to **C16, C17 (Pr.919), C18, and C19 (Pr.920)**.

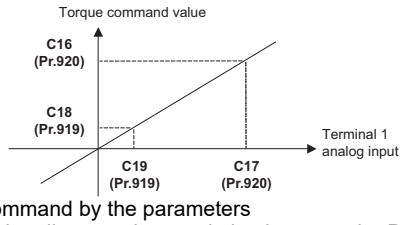

- Torque command by the parameters
  The following diagram shows relation between the **Pr.805** or **Pr.806** setting and the actual torque command value. The torque command is shown by offset from 1000% that is regarded as 0%.

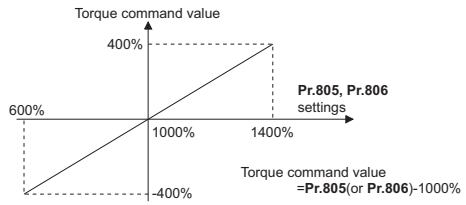

- The **Pr.1114** setting determines whether or not the torque command polarity is reversed when the reverse rotation command (STR) is turned ON.

Pr.1114 setting	Torque command polarity (sign) when the STR signal is ON
0	Not reversed
1 (initial value)	Reversed

Speed limit under torque control

Sensorless Vector

Pr.	GROUP	Name	Pr.	GROUP	Name
807	H410	Speed limit selection	808	H411	Forward rotation speed limit/speed limit
809	H412	Reverse rotation speed limit/reverse-side speed limit	1113	H414	Speed limit method selection

When the inverter is operating under torque control, motor overspeeding may occur if the load torque drops to a value less than the torque command value. Set the speed limit value to prevent such overspeeding.

- The speed limit control method can be selected using **Pr.1113**.

Pr.807 setting	Speed limit control system	Speed limit
9999	Mode 1 (speed control by analog input)	Forward rotation speed limit **Pr.807** = "0": Speed command under speed control **Pr.807** = "1": **Pr.808** setting value **Pr.807** = "2": Analog input at 0 to 10 V input (to terminal 1). **Pr.1** setting value at -10 to 0 V input (to terminal 1). Reverse rotation speed limit **Pr.807** = "0": Speed command under speed control **Pr.807** = "1": **Pr.809** setting value. If **Pr.809** = "9999", the **Pr.808** setting value applies. **Pr.807** = "2": Analog input at 0 to 10 V input (to terminal 1). Analog input at -10 to 0 V input (to terminal 1).
0 (initial value)	Mode 2 (normal setting)	Speed limit **Pr.807** = "0, 2": Speed command under speed control **Pr.807** = "1": **Pr.808** setting value Inverted side speed limit **Pr.809** setting value
1	Mode 3 (winding/ unwinding by a positive torque command)	
2	Mode 4 (winding/ unwinding by a negative torque command)	
10	Switchover by external terminals	X93 signal OFF: Speed limit by the speed limit mode 3 X93 signal ON: Speed limit by the speed limit mode 4

Pr. 810 to 817 Refer to the page on Pr.22.
Pr. 811 Refer to the page on Pr.37.

Easy gain tuning selection

Sensorless Vector PM

Pr.	GROUP	Name	Pr.	GROUP	Name
818	C112	Easy gain tuning response level setting	819	C113	Easy gain tuning selection

The load inertia ratio (load moment of inertia) for the motor is calculated in real time from the torque command and rotation speed during motor driving by the vector control. Gains for each control **(Pr.422, Pr.820, Pr.821, and Pr.828)** are set automatically from this load inertia ratio and the setting value for the response level (**Pr.818**).
Under Real sensorless vector control or PM sensorless vector control, enter the load inertia ratio manually.
The work required for gain adjustment is reduced.

- Set the response level in **Pr.818** to calculate each gain from the load inertia ratio.
- The **Pr.819** setting enables/disables the easy gain tuning.

Pr.	Setting range	Description
818	1 to 15	1: Slow response ↓ 15: Fast response
819	0 (initial value)	No easy gain tuning
	1	Gain is calculated with load calculation. (This function is valid under vector control.)
	2	Gain is calculated with load **(Pr.880)** manual input.

Proportional gain setting for speed loop

Sensorless Vector PM

Pr.	GROUP	Name	Pr.	GROUP	Name
820	G211	Speed control P gain 1	830	G311	Speed control P gain 2
1116	G206	Constant output range speed control P gain compensation	1117	G261	Speed control P gain 1 (per-unit system)
1118	G361	Speed control P gain 2 (per-unit system)	1121	G260	Per-unit speed control reference frequency

Set the proportional gain for speed loop. (Setting this parameter higher improves the speed response and reduces the speed fluctuation caused by external disturbance. However, too large setting causes vibration or noise.)

- The setting range of **Pr.820 Speed control P gain 1** and **Pr.830 Speed control P gain 2** is 0 to 1000%. The initial value of **Pr.820** is 60%.
- A speed loop proportional gain can be set in the per-unit system using **Pr.1117**, **Pr.1118**, and **Pr.1121**.
- As the speed control response level is decreased in the constant output range (at the rated speed or more) due to the weak field magnet, the speed control P gain is compensated in **Pr.1116**.

Integral time setting for speed control

Sensorless Vector PM

Pr.	GROUP	Name	Pr.	GROUP	Name
821	G212	Speed control integral time 1	831	G312	Speed control integral time 2
1115	G218	Speed control integral term clear time	1348	G263	P/PI control switchover frequency

Set the integral compensation time for speed loop.
Setting this parameter lower shortens the return time to the original speed when the speed fluctuates due to external disturbance. However, too small setting causes overshoot.
Setting this parameter higher improves the level of safety. However, large setting prolongs the return time (response time) and may cause undershoot.
When the X44 signal is turned ON or the motor speed falls below the **Pr.1348** setting, speed loop integration is stopped and the accumulated integral term is reduced and cleared according to **Pr.1115**.

Pr. 822 Refer to the page on Pr.74.

Speed detection filter function

Sensorless Vector PM

Pr.	GROUP	Name	Pr.	GROUP	Name
823	G215	Speed detection filter 1	833	G315	Speed detection filter 2

Set the time constant of primary delay filter for speed feedback signal.
Speed loop response is reduced. Under ordinary circumstances, therefore, use the initial value as it is.
If there is speed ripple due to high frequency disturbance, set a time constant.
Speed is oppositely destabilized if the setting value is too large.

Proportional gain setting for current loop

Sensorless Vector PM

Pr.	GROUP	Name	Pr.	GROUP	Name
824	G213	Torque control P gain 1 (current loop proportional gain)	834	G313	Torque control P gain 2

Set the proportional gain under torque control.
If the setting value is large, changes in the current command can be followed well and current fluctuation relative to external disturbance is smaller. If the setting value is however too large, it becomes unstable and high frequency torque pulse is produced.
The setting range of **Pr.824 Torque control P gain 1 (current loop proportional gain)** and **Pr.834 Torque control P gain 2** is 0 to 500%. The initial value of **Pr.824** is 100%.
For ordinary adjustment, try to set within the range of 50 to 200%.

Current control integral time setting

Sensorless Vector

Pr.	GROUP	Name	Pr.	GROUP	Name
825	G214	Torque control integral time 1 (current loop integral time)	835	G314	Torque control integral time 2

Set the current loop integral compensation time under torque control.
Setting this parameter smaller increases torque response. However, too small setting may destabilize current.
If the setting value is small, it produces current fluctuation toward disturbance, decreasing time until it returns to the original current value.

Pr. 826 Refer to the page on Pr.74.

Torque detection filter function

Sensorless Vector PM

Pr.	GROUP	Name	Pr.	GROUP	Name
827	G216	Torque detection filter 1	837	G316	Torque detection filter 2

Set the time constant of primary delay filter for torque feedback signal.
Current loop response is reduced. Under ordinary circumstances, therefore, use the initial value as it is.

Speed feed forward control and model adaptive speed control

Sensorless Vector PM

Pr.	GROUP	Name	Pr.	GROUP	Name
828	G224	Model speed control gain	877	G220	Speed feed forward control/model adaptive speed control selection
878	G221	Speed feed forward filter	879	G222	Speed feed forward torque limit
880	C114	Load inertia ratio	881	G223	Speed feed forward gain
1119	G262	Model speed control gain (per-unit system)	1121	G260	Per-unit speed control reference frequency

Speed feed forward control or model adaptive speed control can be selected using parameter settings.
Under speed feed forward control, the motor trackability for speed command changes can be improved.
Under model adaptive speed control, the speed trackability and the response level to motor external disturbance torque can be adjusted individually.

Pr. 877 setting	Description
0 (initial value)	Perform normal speed control.
1	Perform speed feed forward control.
2	Model adaptive speed control becomes valid.

- Speed feed forward control
  When the load inertia ratio is set in **Pr.880**, the required torque for the set inertia is calculated according to the acceleration and deceleration commands, and the torque is generated quickly.
  When the inertia ratio is to be estimated by easy gain tuning, the estimated inertia ratio is stored as the setting value of **Pr.880**. The speed feed forward is calculated based on this setting value.
  When the speed feed forward gain is 100%, the calculation result for speed feed forward is applied as is.
  If the speed command changes suddenly, the torque is increased by the speed feed forward calculation. The maximum limit for the speed feed forward torque is set in **Pr.879**.
  The speed feed forward result can also be lessened with a primary delay filter in **Pr.878**.
- Model adaptive speed control
  The model speed of the motor is calculated, and the feedback is applied to the speed controller on the model side. Also, this model speed is set as the command of the actual speed controller.
  The inertia ratio of **Pr.880** is used when the speed controller on the model side calculates the torque current command value.
  When the inertia ratio is to be estimated by easy gain tuning, the setting value of **Pr.880** is overwritten by the estimated inertia ratio. The torque current command value is calculated based on this setting value.
  The torque current command of the speed controller on the model side is added to the output of the actual speed controller, and set as the input of the iq current control.
  Pr.828 is used for the speed control on the model side (P control), and first gain **Pr.820** is used for the actual speed controller. The model adaptive speed control is enabled for the first motor.
  Even if the driven motor is switched to the second motor while **Pr.877** = "2", the second motor is operated as **Pr.877** = "0".
- The model adaptive speed control gain can be set in the per-unit system using **Pr.1119** and **Pr.1121**.

Pr.830 Refer to the page on Pr.820.
Pr.831 Refer to the page on Pr.821.
Pr.832 Refer to the page on Pr.74.
Pr.833 Refer to the page on Pr.823.
Pr.834 Refer to the page on Pr.824.
Pr.835 Refer to the page on Pr.825.
Pr.836 Refer to the page on Pr.74.
Pr.837 Refer to the page on Pr.827.

Torque bias

Sensorless Vector

Pr.	GROUP	Name	Pr.	GROUP	Name
840	G230	Torque bias selection	841	G231	Torque bias 1
842	G232	Torque bias 2	843	G233	Torque bias 3
844	G234	Torque bias filter	845	G235	Torque bias operation time
846	G236	Torque bias balance compensation	847	G237	Fall-time torque bias terminal 1 bias
848	G238	Fall-time torque bias terminal 1 gain			

The torque bias function can be used to make the starting torque start-up faster. At this time, the motor starting torque can be adjusted with a contact signal or analog signal.

Pr. 840 setting	Description
0	Set the torque bias amount using contact signals (X42, X43) in **Pr.841 to Pr.843**.
1	Set the torque bias amount using terminal 1 in any of **C16 to C19**. (When the squirrel cage rises during forward motor rotation.)
2	Set the torque bias amount using terminal 1 in any of **C16 to C19**. (When the squirrel cage rises during reverse motor rotation.)
3	The torque bias amount using terminal 1 can be set automatically in **C16 to C19 and Pr.846** according to the load.
24	For details of the torque bias command via PROFIBUS communication (FR-A8NP), refer to the Instruction Manual of the FR-A8NP (option).
25	
9999 (initial value)	No torque bias, rated torque 100%

- **Pr.841 Torque bias 1, Pr.842 Torque bias 2, and Pr.843 Torque bias 3**
  The rated torque of 100% equals to the torque bias setting value of 1000%, which is the central value of the torque. When the setting value is 1000%, the bias value is "0".
- **Pr.844 Torque bias filter**
  The torque start-up can be made slower. The torque start-up operation at this time is the time constant of the primary delay filter.
- **Pr.845 Torque bias operation time**
  Set the time for continuing the output torque simply by using the command value for the torque bias.
- **Pr.846 Torque bias balance compensation**
  Set the voltage of the torque bias analog input value that is input to terminal 1 to compensate the balance of the torque bias amount.
- **Pr.847 Fall-time torque bias terminal 1 bias, Pr.848 Fall-time torque bias terminal 1 gain**
  Set the torque bias amount of when the cage is descended.

Pr.849 Refer to the page on Pr.74.
Pr.850 Refer to the page on Pr.10.
Pr.851, 852 Refer to the page on Pr.359.
Pr.853 Refer to the page on Pr.285.

Excitation ratio Sensorless Vector

Pr.	GROUP	Name
854	G217	Excitation ratio

The excitation ratio can be lowered to enhance efficiency for light loads. (Motor magnetic noise can be reduced.)
When excitation ratio is reduced, output torque startup is less responsive.

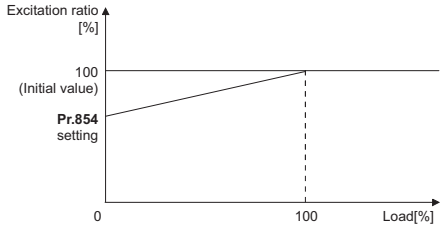

Pr. 855 Refer to the page on Pr.376.

Analog input terminal (terminal 1, 4) function assignment

Pr.	GROUP	Name	Pr.	GROUP	Name
858	T040	Terminal 4 function assignment	868	T010	Terminal 1 function assignment

The analog input terminal 1 and terminal 4 functions are set and changeable with parameters.

Pr.	Setting range	V/F control, Advanced magnetic flux vector control	Real sensorless vector control, PM sensorless vector control, vector control		
			Speed control	Torque control	Position control
868	0 (initial value)	Frequency setting auxiliary	Speed setting auxiliary	Speed limit assistance	-
	1	-	Magnetic flux command *1	Magnetic flux command *1	Magnetic flux command *1
	2	-	Regenerative driving torque limit (**Pr.810** = 1)	-	Regenerative driving torque limit (**Pr.810** = 1)
	3	-	-	Torque command (**Pr.804** = 0)	-
	4	Stall prevention operation level input	Torque limit (**Pr.810** = 1)	Torque command (**Pr.804** = 0)	Torque limit (**Pr.810** = 1)
	5	-	-	Forward/ reverse rotation speed limit (**Pr.807** = 2)	-
	6	-	Torque bias input (**Pr.840** =1, 2, 3)	-	-
	9999	-	-	-	-
858	0 (initial value)	Frequency command (AU signal-ON)	Speed command (AU signal-ON)	Speed limit (AU signal-ON)	-
	1	-	Magnetic flux command *1	Magnetic flux command *1	Magnetic flux command *1
	4	Stall prevention operation level input	Torque limit (**Pr.810** = 1)	-	Torque limit (**Pr.810** = 1)
	9999	-	-	-	-

*1 This function is valid under vector control.
-: No function

Pr. 859, 860 Refer to the page on Pr.82.
Pr. 862 Refer to the page on Pr.80.

Encoder pulse dividing output Vector

Pr.	GROUP	Name	Pr.	GROUP	Name
413	M601	Encoder pulse division ratio	863	M600	Control terminal option-Encoder pulse division ratio

When the FR-A8AL or FR-A8TP is used, the encoder pulse at the motor end can be divided in division ratio set in **Pr.413** (for the FR-A8AL) or **Pr.863** (for the FR-A8TP) for the signal output.
Use this parameter to make the response of the machine to be input slower, etc.

Output torque detection

Magnetic flux Sensorless Vector PM

Pr.	GROUP	Name
864	M470	Torque detection

A signal is output when the motor torque is higher than the setting of **Pr.864**.
This function can be used for electromagnetic brake operation, open signal, etc.

The Torque detection (TU) signal turns ON when the output torque reaches the detection torque value set in **Pr.864** or higher.
The Torque detection (TU) signal turns OFF when the output torque drops lower than the detection torque value.

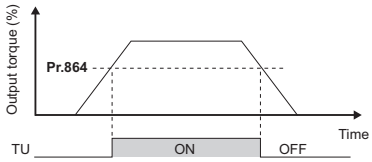

Pr. 865 Refer to the page on Pr.41.
Pr. 866 Refer to the page on Pr.55.
Pr. 867 Refer to the page on Pr.C0(900).
Pr. 868 Refer to the page on Pr.858.
Pr. 869 Refer to the page on Pr.C0(900).
Pr. 870 Refer to the page on Pr.41.
Pr. 872 Refer to the page on Pr.251.
Pr. 873 Refer to the page on Pr.285.
Pr. 874 Refer to the page on Pr.22.

Fault definition

Pr.	GROUP	Name
875	H030	Fault definition

Fault output can be done after deceleration stop when motor thermal protection is activated.

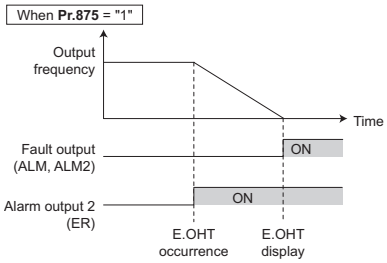

Pr.875 setting	Operation	Description
0 (initial value)	Normal operation	The output of the inverter is shut off immediately if any fault occurs. At this time, the alarm output 2 signal (ER) and a fault signal are output.
1	Fault definition	At activation of the external thermal relay (E.OHT), motor load (electronic thermal O/L relay) (E.THM) and PTC thermistor (PTC) protective functions, the alarm output 2 (ER) signalis is displayed, and the motor decelerates to stop. After it stops, a fault signal is output. During fault occurrence aside from the E.OHT, E.THM and E.PTC, the output is immediately shut off, and the fault is outputted. Under position control, the operation of the setting value "0" is applied.

Pr. 876 Refer to the page on Pr.9.
Pr. 877 to 881 Refer to the page on Pr.828.

Regeneration avoidance function

Pr.	GROUP	Name	Pr.	GROUP	Name
882	G120	Regeneration avoidance operation selection	883	G121	Regeneration avoidance operation level
884	G122	Regeneration avoidance at deceleration detection sensitivity	885	G123	Regeneration avoidance compensation frequency limit value
886	G124	Regeneration avoidance voltage gain	665	G125	Regeneration avoidance frequency gain

The regenerative status can be avoided by detecting the regenerative status and raising the frequency.

- Continuous operation is possible by increasing the frequency automatically so it will not go into regenerative operation even when the fan is turned forcefully by other fans in the same duct.

Pr.	Setting range	Description
882	0 (initial value)	Disables regeneration avoidance function
	1	Constantly enables regeneration avoidance function
	2	Enables regeneration avoidance function only during constant-speed operation
883	300 to 1200 V	Set the bus voltage level to operate the regeneration avoidance operation. When the bus voltage level is set low, it will be harder to generate overvoltage error, but actual deceleration time will be longer. Set the setting value higher than power supply voltage × $\sqrt{2}$.
884	0 (initial value)	Disables regeneration avoidance due to bus voltage change rate
	1 to 5	Set the sensitivity to detect the bus voltage change rate. Setting value 1 → 5 Detection sensitivity Low → High
885	0 to 590 Hz	Set the limit value for frequency to rise when the regeneration avoidance function operates.
	9999	Disables frequency limit
886	0 to 200%	Adjust the response at the time of regeneration avoidance operation. When the setting value is set larger, response against the bus voltage change will improve, but the output frequency may become unstable. If the load inertia of the motor is large, set the setting value of **Pr.886** smaller. When the vibration cannot be stabilized even if the setting value of **Pr.886** is made smaller, set the setting value of **Pr.665** smaller.
665	0 to 200%	

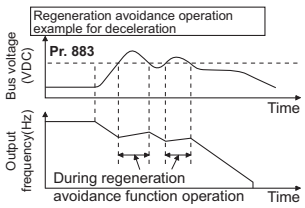

Free parameter

Pr.	GROUP	Name	Pr.	GROUP	Name
888	E420	Free parameter 1	889	E421	Free parameter 2

These parameters can be used for any purpose.
Any number within the setting range of 0 to 9999 can be input.
For example, these numbers can be used:

- As a unit number when multiple units are used.
- As a pattern number for each operation application when multiple units are used.
- As the year and month of introduction or inspection.

Energy saving monitor

Pr.	GROUP	Name	Pr.	GROUP	Name
891	M023	Cumulative power monitor digit shifted times	892	M200	Load factor
893	M201	Energy saving monitor reference (motor capacity)	894	M202	Control selection during commercial power-supply operation
895	M203	Power saving rate reference value	896	M204	Power unit cost
897	M205	Power saving monitor average time	898	M206	Power saving cumulative monitor clear
899	M207	Operation time rate (estimated value)	52	M100	Operation panel main monitor selection
54	M300	FM/CA terminal function selection	158	M301	AM terminal function selection
774	M101	Operation panel monitor selection 1	775	M102	Operation panel monitor selection 2
776	M103	Operation panel monitor selection 3	992	M104	Operation panel setting dial push monitor selection

From the power consumption estimated value during commercial power supply operation, the energy saving effect by use of the inverter can be monitored and output.

- The items that can be monitored on the power saving monitor (**Pr.52, Pr.54, Pr.158, Pr.774 to Pr.776, Pr.992** = "50") are indicated below.
  (Only Power saving and Average power saving can be set to **Pr.54** (terminal FM, terminal CA) and **Pr.158** (terminal AM).)

Energy saving monitored item	Description and formula	Increment
Power saving	The difference between the estimated value of the required power during commercial power supply operation and the input power calculated with the inverter. Power supply during commercial power supply operation - input power monitor	0.01 kW /0.1 kW *1
Power saving rate	The power saving ratio with the commercial power supply operation as 100%. $\frac{\text{Power saving}}{\text{Power during commercial power supply operation}} \times 100$	0.1%
	The power saving ratio with **Pr.893** as 100%. $\frac{\text{Power saving}}{\textbf{Pr.893}} \times 100$	
Average power saving	The average power saving per hour during a predetermined time (**Pr.897**). $\frac{\Sigma\,(\text{Power saving} \times \Delta t)}{\textbf{Pr.897}}$	0.01 kWh /0.1 kWh *1
Average power saving rate	The average power saving ratio with the commercial power supply operation as 100%. $\frac{\Sigma\,(\text{Power saving rate} \times \Delta t)}{\textbf{Pr.897}} \times 100$	0.1%
	The average power saving ratio with **Pr.893** as 100%. $\frac{\text{Average power saving}}{\textbf{Pr.893}} \times 100$	
Average power cost savings	The average power saving in terms of cost. Average power saving × **Pr.896**	0.01/0.1 *1

- The items that can be monitored on the cumulative energy saving monitor (**Pr.52, Pr.774 to Pr.776, Pr.992** = "51") are indicated below. (The monitor value of the cumulative monitor can be shifted to the right with **Pr.891 Cumulative power monitor digit shifted times**.)

Energy saving monitored item	Description and formula	Increment
Power saving amount	The cumulative power saving is added up per hour. Σ (Power saving rate × Δt)	0.01 kWh *1 0.1 kWh *2
Power cost saving	The power saving amount in terms of cost. Power saving × **Pr.896**	0.01 *1 0.1 *2
Annual power saving amount	Estimated value of annual power saving amount. $\frac{\text{Power saving amount}}{\text{Operation time during power saving accumulation}} \times 24 \times 365 \times \frac{\text{Pr.899}}{100}$	0.01 kWh *1 0.1 kWh *2
Annual power cost savings	Annual power saving amount in terms of cost. Annual power saving amount × **Pr.896**	0.01 *1 0.1 *2

*1 Increment for the FR-A820-03160(55K) or lower and the FR-A840-01800(55K) or lower
*2 Increment for the FR-A820-03800(75K) or higher and the FR-A840-02160(75K) or higher

Adjusting terminal FM/CA and terminal AM (calibration)

Pr.	GROUP	Name	Pr.	GROUP	Name
C0 (900)	M310	FM terminal calibration	C1 (901)	M320	AM terminal calibration
C8 (930)	M330	Current output bias signal	C9 (930)	M331	Current output bias current
C10 (931)	M332	Current output gain signal	C11 (931)	M333	Current output gain current
867	M321	AM output filter	869	M334	Current output filter

By using the operation panel or parameter unit, terminals FM, CA and AM can be calibrated to the full scale.

- Terminal FM calibration (**C0 (Pr.900)**)
  Terminal FM is preset to output pulses. By setting the calibration parameter **C0 (Pr.900)**, the meter connected to the inverter can be calibrated by parameter setting without use of a calibration resistor.
  Using the pulse train output of terminal FM, a digital display can be provided to connect a digital counter. The monitor value is 1440 pulses/s output at the full-scale value of **Pr.54 FM/CA terminal function selection**.

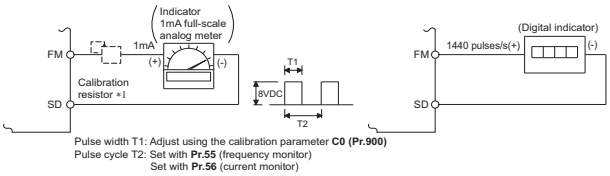

*1 Not needed when the operation panel (FR-DU08) or parameter unit (FR-PU07) is used for calibration.
Use a calibration resistor when the indicator (frequency meter) needs to be calibrated by a neighboring device because the indicator is located far from the inverter.
However, the frequency meter needle may not deflect to full-scale if the calibration resistor is connected. In this case, calibrate additionally with the operation panel or parameter unit.

  Calibration with **Pr.900** cannot be done when terminal FM is set to open collector output with **Pr.291 Pulse train I/O selection**.
- Calibration of terminal AM (**C1 (Pr.901)**)
  Terminal AM is initially set to provide a 10 VDC output in the full-scale state of the corresponding monitor item. **Calibration parameter C1 (Pr.901)** allows the output voltage ratio (gains) to be adjusted according to the meter scale. Note that the maximum output voltage is 10 VDC.
- Using **Pr.867**, the output voltage response of terminal AM can be adjusted in the range of 0 to 5 s.
- Terminal CA calibration (**C0 (Pr.900), C8 (Pr.930) to C11 (Pr.931)**)
  Terminal CA is initially set to provide a 20 mADC output in the full-scale state of the corresponding monitor item. Calibration parameter **C0 (Pr.900)** allows the output current ratio (gains) to be adjusted according to the meter scale. Note that the maximum output current is 20 mA DC.
- Set a value at the minimum current output in the calibration parameters **C8 (Pr.930) and C9 (Pr.930)**. Calibration parameter **C10 (Pr.931) and C11 (Pr.931)** are used to set a value at the maximum current output.
- Using **Pr.869**, the output current response of terminal CA can be adjusted in the range of 0 to 5 s.

Pr. C2 (902) to C7 (905), C12 (917) to C19 (920), C38 (932) to C41 (933)
Refer to the page on Pr.125.
Pr. C8 (930) to C11 (931) **Refer to the page on Pr.C0 (900).**
Pr. C42 (934) to C45 (935) **Refer to the page on Pr.127.**

Using the power supply exceeding 480 V

Pr.	GROUP	Name
977	E302	Input voltage mode selection

To input a voltage between 480 V and 500 V to the 400 V class inverter, change the voltage protection level.

Pr. 977 setting	Description
0 (initial value)	400 V class voltage protection level
1	500 V class voltage protection level

Parameter clear, parameter copy, and initial value change list

Pr.	GROUP	Name	Pr.	GROUP	Name
989	E490	Parameter copy alarm release	Pr.CLR		Parameter clear
ALL.CL		All parameter clear	Err.CL		Fault history clear
Pr.CPY		Parameter copy	Pr.CHG		Initial value change list

- Set **Pr.CLR Parameter clear** = "1" to initialize all parameters. (Calibration parameters are not cleared.)*1
- Set **ALL.CL All parameter clear** = "1" to initialize all parameters.*1
- Set **Err.CL Fault history clear** = "1" to clear the fault history.
- Use **Pr.CPY** to copy the parameter setting to multiple inverters.

Pr. CPY setting	Description
0.---	Cancel
1.RD	Copy the source parameters to the operation panel.
2.WR	Write the parameters copied to the operation panel to the destination inverter.
3.VFY	Verify parameters in the inverter and operation panel.

If the parameter setting is copied from the FR-A820-03160(55K) or lower and FR-A840-01800(55K) or lower to the FR-A820-03800(75K) or higher and FR-A840-02160(75K) or higher, or from the FR-A820-03800(75K) or higher and FR-A840-02160(75K) or higher to the FR-A820-03160(55K) or lower and FR-A840-01800(55K) or lower, the CP warning appears on the operation panel.
After setting the parameters that have the different setting range, set **Pr.989** as follows.

Pr. 989 setting	Operation
10	Cancels the warning of FR-A820-03160(55K) or lower and FR-A840-01800(55K) or lower.
100	Cancels the warning of FR-A820-03800(75K) or higher and FR-A840-02160(75K) or higher.

To display only the numbers of the parameters that have been changed from their initial values, use **Pr.CHG Initial value change list**.

*1 If **Pr.77 Parameter write selection** = "1", the parameter setting is not cleared.

Buzzer control of the operation panel

Pr.	GROUP	Name
990	E104	PU buzzer control

The PU (operation panel or parameter unit) key sound and buzzer can be turned ON/OFF.

Pr.990 setting	Description
0	Without buzzer
1 (initial value)	With buzzer

PU contrast adjustment

Pr.	GROUP	Name
991	E105	PU contrast adjustment

Contrast adjustment of the LCD of the LCD operation panel (FR-LU08) and the parameter unit (FR-PU07) can be performed. Decreasing the setting value makes the contrast lighter.

Pr. 991 setting	Description
0 to 63	0: Light ↓ 63: Dark

Pr.992 Refer to the page on Pr.52.
Pr.994, 995 Refer to the page on Pr.286.

Fault initiation function

Pr.	GROUP	Name
997	H103	Fault initiation

A fault (protective function) is initiated by setting the parameter. This function can be used to check how the system operates at activation of a protective function. The read value is always "9999". Even if "9999" is set, the protective function is not activated.

- Faults that can be written with **Pr.997 Fault initiation**

Pr.997 setting	Fault	Pr.997 setting	Fault	Pr.997 setting	Fault
16	E.OC1	161	E.OP1	211	E.OD
17	E.OC2	164	E.16	213	E.MB1
18	E.OC3	165	E.17	214	E.MB2
19	E.OCT	166	E.18	215	E.MB3
32	E.OV1	167	E.19	216	E.MB4
33	E.OV2	168	E.20	217	E.MB5
34	E.OV3	169	E.PA1	218	E.MB6
35	E.OVT	170	E.PA2	219	E.MB7
48	E.THT	176	E.PE	220	E.EP
49	E.THM	177	E.PUE	222	E.MP
64	E.FIN	178	E.RET	225	E.IAH
80	E.IPF	179	E.PE2	228	E.LCI
81	E.UVT	192	E.CPU	229	E.PCH
82	E.ILF	193	E.CTE	230	E.PID
96	E.OLT	194	E.P24	231	E.EHR
97	E.SOT	196	E.CDO	241	E.1
98	E.LUP	197	E.IOH	242	E.2
99	E.LDN	198	E.SER	243	E.3
112	E.BE	199	E.AIE	245	E.5
128	E.GF	200	E.USB	246	E.6
129	E.LF	201	E.SAF	247	E.7
144	E.OHT	208	E.OS	251	E.11
145	E.PTC	209	E.OSD	253	E.13
160	E.OPT	210	E.ECT		

Pr.998 and IPM Refer to the page 241.

Automatic parameter setting

Pr.	GROUP	Name	Pr.	GROUP	Name
999	E431	Automatic parameter setting	AUTO		Automatic parameter setting

Parameter settings are changed as a batch. Those include communication parameter settings for the Mitsubishi Electric's human machine interface (GOT) connection and the parameter setting for the rated frequency settings of 50 Hz/60 Hz.
Multiple parameters are changed automatically. Users do not have to consider each parameter number. (Automatic parameter setting mode)

Pr.999 setting	Description		Operation in the automatic parameter setting mode (AUTO)
9999 (initial value)	No action		-
1	Sets the standard monitor indicator setting of PID control.		"AUTO" → "PID" → Write "1"
2	Automatically sets the monitor indicator for PID control.		"AUTO" → "PID" → Write "2"
10	Automatically sets the communication parameters for the GOT connection with a PU connector (FREQROL 500/700/800, SENSORLESS SERVO)		"AUTO" → "GOT" → Write "1"
11	Automatically sets the communication parameters for the GOT connection with RS-485 terminals (FREQROL 500/700/800, SENSORLESS SERVO)		-
12	Automatically sets the communication parameters for the GOT connection with a PU connector (FREQROL 800 (Automatic Negotiation))		"AUTO" → "GOT" → Write "2"
13	Automatically sets the communication parameters for the GOT connection with RS-485 terminals (FREQROL 800 (Automatic Negotiation))		-
20	50 Hz rated frequency	Sets the related parameters of the rated frequency according to the power supply frequency	"AUTO" → "F50" → Write "1"
21	60 Hz rated frequency		-

Direct setting

Pr.	GROUP	Name
1000	E108	Direct setting selection

The PID set point setting screen (direct setting screen) can be displayed first on the LCD operation panel according to the parameter setting.

Pr.1000 setting	Description
0 (initial value)	Displays the frequency setting screen.
1	Displays the direct setting screen (for set point setting).
2	Displays the direct setting screen (for set point setting) and the frequency setting screen.

Parallel operation selection (FR-A842-P)

Pr.	GROUP	Name
1001	E390	Parallel operation selection

The master/slave inverters to be operated in parallel can be set.

Pr.1001 setting	Description		First monitor
	Master/slave station	Number of slave stations	
1	Slave station 1	-	SLV.1
2	Slave station 2	-	SLV.2
100 (initial value)	Master station	0	-
200		1	-
300		2	-

Pr. 1002 Refer to the page on Pr.82.

Notch filter Sensorless Vector PM

Pr.	GROUP	Name	Pr.	GROUP	Name
1003	G601	Notch filter frequency	1004	G602	Notch filter depth
1005	G603	Notch filter width			

The response level of speed control in the resonance frequency band of mechanical systems can be lowered to avoid mechanical resonance.

Pr.	Setting range	Description
1003	0 (initial value)	No notch filter
	8 to 1250 Hz	Set the frequency for the center of gain attenuation.
1004	0 to 3	0 (Deep) → 3 (Shallow)
1005	0 to 3	0 (Narrow) → 3 (Wide)

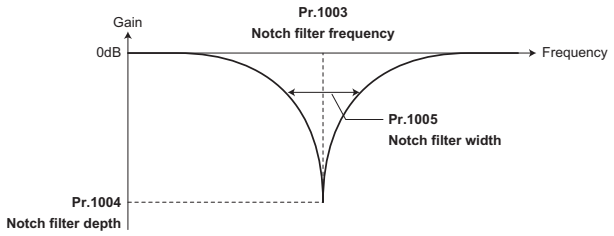

Simple clock function

Pr.	GROUP	Name	Pr.	GROUP	Name
1006	E020	Clock (year)	1007	E021	Clock (month, day)
1008	E022	Clock (hour, minute)			

The time can be set. The time can only be updated while the inverter power is ON.

Pr.	Description
1006	Set the year (A.D.). Initial value: 2000
1007	Set the month and day. 1000 and 100 digits: January to December 10 and 1 digits: 1 to end of month (28, 29, 30 or 31) For December 31, set "1231". Initial value: 101 (January 1)
1008	Set the hour and minute using the 24-hour clock. 1000 and 100 digits: 0 to 23 hours 10 and 1 digits: 0 to 59 minutes For 23:59, set "2359". Initial value: 0 (00:00)

- When the year, month, day, time and minute are set in the parameters, the inverter counts the date and time. The date and time can be checked by reading the parameters.
- Because the date and time are cleared after turning OFF the control circuit power supply, the clock function must be reset after turning ON the power supply. Use a separate power supply, such as an external 24 V power supply, for the control circuit of the simple clock function, and supply power continuously to this control circuit.
  By using the real-time clock function with the FR-LU08, it is not necessary to set the time again even when the power supply is turned OFF.
- The set clock is also used for functions such as fault history.

Pr. 1018 Refer to the page on Pr.52.

Trace function

Pr.	GROUP	Name	Pr.	GROUP	Name
1020	A900	Trace operation selection	1021	A901	Trace mode selection
1022	A902	Sampling cycle	1023	A903	Number of analog channels
1024	A904	Sampling auto start	1025	A905	Trigger mode selection
1026	A906	Number of sampling before trigger	1027	A910	Analog source selection (1ch)
1028	A911	Analog source selection (2ch)	1029	A912	Analog source selection (3ch)
1030	A913	Analog source selection (4ch)	1031	A914	Analog source selection (5ch)
1032	A915	Analog source selection (6ch)	1033	A916	Analog source selection (7ch)
1034	A917	Analog source selection (8ch)	1035	A918	Analog trigger channel
1036	A919	Analog trigger operation selection	1037	A920	Analog trigger level
1038	A930	Digital source selection (1ch)	1039	A931	Digital source selection (2ch)
1040	A932	Digital source selection (3ch)	1041	A933	Digital source selection (4ch)
1042	A934	Digital source selection (5ch)	1043	A935	Digital source selection (6ch)
1044	A936	Digital source selection (7ch)	1045	A937	Digital source selection (8ch)
1046	A938	Digital trigger channel	1047	A939	Digital trigger operation selection

The operating status of the inverter can be traced and saved on a USB memory device.
Saved data can be monitored by FR Configurator2, and the status of the inverter can be analyzed.

- This function samples the status (analog monitor and digital monitor) of the inverter, traces the sampling data when a trigger (trace start condition) is generated, and saves the resulting trace data.
- Start of sampling and copying of data **(Pr.1020, Pr.1024)**
  Set the trace operation. The trace operation is set by one of two ways, by setting **Pr.1020 Trace operation selection** and by setting in the trace mode on the operation panel.
  To automatically start sampling when the power supply is turned ON or at a recovery after an inverter reset, set "1" to **Pr.1024 Sampling auto start**.

Pr. 1020 setting	Setting by trace mode	Operation
0 (initial value)	0.-- -- --	Sampling standby
1	1.RUN	Sampling start
2	2.TRG	Forced trigger (sampling stop)
3	3.END	Sampling stop
4	4.CPY	Data transmission

Turning OFF the operation panel display

Pr.	GROUP	Name
1048	E106	Display-off waiting time

Monitor indicators can be turned OFF while the operation panel (FR-DU08) is not used.

Pr. 1048 setting	Description
0 (initial value)	The display is always ON.
1 to 60 min	Set the waiting time to turn off the monitor display after the operation panel becomes idle.

Resetting USB host errors

Pr.	GROUP	Name
1049	E110	USB host reset

When a USB device is connected to the USB connector (connector A), the USB host error can be canceled without performing an inverter reset.

Pr. 1049 setting	Description
0 (initial value)	Read only
1	Resets the USB host.

Anti-sway control

Pr.	GROUP	Name	Pr.	GROUP	Name
1072	A310	DC brake judgment time for anti-sway control operation	1073	A311	Anti-sway control operation selection
1074	A312	Anti-sway control frequency	1075	A313	Anti-sway control depth
1076	A314	Anti-sway control width	1077	A315	Rope length
1078	A316	Trolley weight	1079	A317	Load weight

Swinging of crane-lifted load is suppressed on the crane running axis.

Pr.	Setting range	Description
1072	0 to 10 s	Set the waiting time to start the DC injection brake (zero speed control, servo lock) after the output frequency reaches the **Pr.10 DC injection brake operation frequency** or lower.
1073	0 (initial value)	Anti-sway control disabled
	10 to 1250 Hz	Anti-sway control enabled
1074	0.05 to 2 Hz	Sets the vibration frequency of the load.
	9999	A vibration frequency is estimated based on the **Pr.1077** to **Pr.1079** settings, and anti-sway control is performed.
1075	0 to 3	0 (Deep) → 3 (Shallow)
1076	0 to 3	0 (Narrow) → 3 (Wide)
1077	0.1 to 50 m	Set the rope length of the crane.
1078	1 to 50000 kg	Set the weight of the trolley.
1079	1 to 50000 kg	Set the weight of the load.

Emergency stop function

Pr.	GROUP	Name	Pr.	GROUP	Name
1103	F040	Deceleration time at emergency stop	1349	G264	Emergency stop operation selection

At a failure in the host controller, the motor can be decelerated to a stop using an input via an external terminal.
At turn-ON of the emergency stop signal (X92), the motor is decelerated in the deceleration time of **Pr.1103** in accordance with the torque limit set in **Pr.815**.
The droop control and the speed loop integration at the emergency stop by the Emergency stop (X92) signal can be enabled/disabled using **Pr.1349**.

Inverter-to-inverter link function (FR-A800-E)

Pr.	GROUP	Name	Pr.	GROUP	Name
1124	N681	Station number in inverter-to-inverter link	1125	N682	Number of inverters in inverter-to-inverter link system

The inverter-to-inverter link function enables communication between multiple inverters connected by Ethernet in a small-scale system by using the I/O devices and special registers of the PLC function. The inverter-to-inverter link function is enabled by simply setting **Pr.1124** and **Pr.1125**.

Pr.	Setting range	Description
1124	0 to 5	Set the station number for the inverter-to-inverter link function.
	9999 (initial value)	Inverter-to-inverter link function disabled
1125	2 to 6	Set the total number of inverters used for the inverter-to-inverter link function.

- Setting procedure

1. Set a value other than "0" in **Pr.414 PLC function operation selection** to enable the PLC function.
2. To set the inverter as the master, set "0" in **Pr.1124**, and to set the inverter as a slave, select a station number from 1 to 5 and set the number in **Pr.1124**.
3. Set the total number of inverters used for the inverter-to-inverter link function in **Pr.1125**.
   For example, set "3" in **Pr.1125** when two slave inverters and the master inverter are used.
4. Use FR Configurator2 to write sequence programs to the master inverter.

Pr.1134 to 1149 Refer to the page on Pr.127.
Pr.1150 to 1199 Refer to the page on Pr.414.
Pr.1221 to 1293 Refer to the page on Pr.419.
Pr.1294 to 1297 Refer to the page on Pr.426.
Pr.1298 Refer to the page on Pr.422.
Pr.1299 Refer to the page on Pr.10.

Start count monitor

Pr.	GROUP	Name	Pr.	GROUP	Name
1410	A170	Starting times lower 4 digits	1411	A171	Starting times upper 4 digits

- The inverter starting times can be counted.
- Confirming the starting times can be used to determine the timing of the maintenance, or can be used as a reference for system inspection or parts replacement.

Pr.	Setting range	Description
1410	0 to 9999	Displays the lower four digits of the number of the inverter starting times.
1411	0 to 9999	Displays the upper four digits of the number of the inverter starting times.

- Every start signal input (the RUN signal ON) while the inverter output is stopped is counted as the inverter starting time. (Starting during pre-excitation is also counted.)

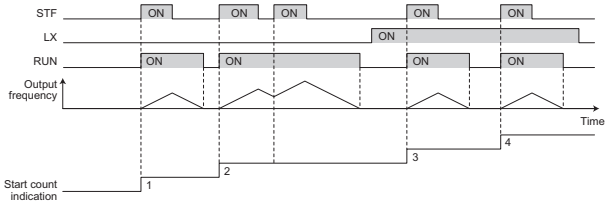

Pr.1412, 1413 Refer to the page on Pr.82.

Load characteristics fault detection

Pr.	GROUP	Name	Pr.	GROUP	Name
1480	H520	Load characteristics measurement mode	1481	H521	Load characteristics load reference 1
1482	H522	Load characteristics load reference 2	1483	H523	Load characteristics load reference 3
1484	H524	Load characteristics load reference 4	1485	H525	Load characteristics load reference 5
1486	H526	Load characteristics maximum frequency	1487	H527	Load characteristics minimum frequency
1488	H531	Upper limit warning detection width	1489	H532	Lower limit warning detection width
1490	H533	Upper limit fault detection width	1491	H534	Lower limit fault detection width
1492	H535	Load status detection signal delay time / load reference measurement waiting time			

This function is used to monitor whether the load is operating in normal condition by storing the speed/torque relationship in the inverter to detect mechanical faults or for maintenance. When the load operating condition deviates from the normal range, the protective function is activated or the warning is output to protect the inverter or the motor.
(This function is not available in the FR-A842-P.)

Pr.	Setting range	Description
1480	0 (initial value)	Load characteristics measurement mode does not start. (Measurement of load characteristics complete without fault.)
	1	Load characteristics measurement mode is started.
	2, 3, 4, 5, 81, 82, 83, 84, 85	The load characteristics measurement status is displayed. (Read-only)
1481 1482 1483 1484 1485	0 to 400%	Set the reference value of normal load characteristics. 8888: The present load status is written as reference status. 9999: The load reference is invalid.

Pr.	Setting range	Description
1486	0 to 590 Hz	Set the maximum frequency of the load characteristics fault detection range.
1487	0 to 590 Hz	Set the minimum frequency of the load characteristics fault detection range.
1488	0 to 400%	Set the detection width when the upper limit load fault warning is output.
	9999	Function disabled
1489	0 to 400%	Set the detection width when the lower limit load fault warning is output.
	9999	Function disabled
1490	0 to 400%	Set the detection width when output is shut off when the upper limit load fault occurs.
	9999 (initial value)	Function disabled
1491	0 to 400%	Set the detection width when output is shut off when the lower limit load fault occurs.
	9999 (initial value)	Function disabled
1492	0 to 60 s	Set the waiting time after the load fault is detected until warning output or output shutoff. In the load characteristics measurement mode, set the waiting time after the load measurement frequency is reached until the load reference is set.

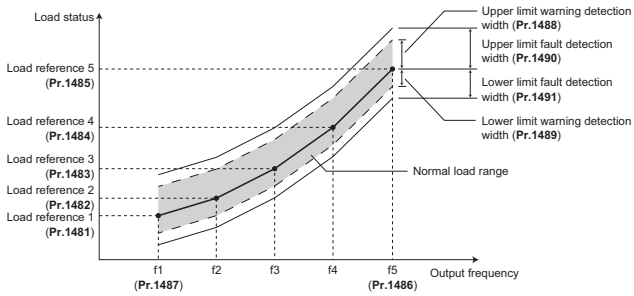

To perform energy-saving operation for an application such as a fan or pump

To perform energy-saving operation for an application such as a fan or pump, set the parameters as follows.

- **Load pattern selection (Pr.14)** V/F
  Optimal output characteristics (V/F characteristics) can be selected for application or load characteristics.
  - Set "1" (for variable-torque load) in **Pr.14 Load pattern selection**.
  - The output voltage will change in square curve against the output frequency at the base frequency or lower.
  - Set this parameter when driving a load with load torque change proportionally against the square of the rotation speed, such as a fan or pump.

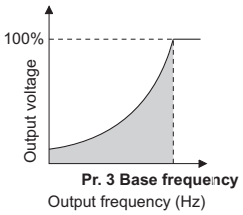

- **Energy saving control (Pr.60)** V/F
  Inverter will perform energy saving control automatically even when the detailed parameter settings are made.
  It is appropriate for an application such as a fan or pump.
  - Set **Pr.60 Energy saving control selection** = "9" (Optimum excitation control mode).
  - The Optimum excitation control is a control method to decide the output voltage by controlling the excitation current so the efficiency of the motor is maximized.
  - The energy saving effect cannot be expected when the motor capacity is extremely smaller than the inverter capacity, or when multiple motors are connected to one inverter.

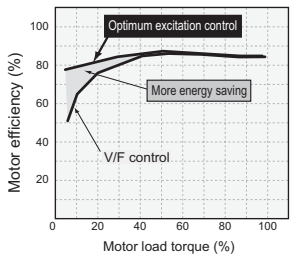

[Comparison of Mitsubishi Electric products]

The list of inverter protective functions

When the inverter detects a fault, depending on the nature of the fault, the operation panel displays an error message or warning, or a protective function is activated to trip the inverter.

	Name	Description	Operation panel indication
Error message *2	Fault history	The operation panel stores the fault indications which appears when a protective function is activated to display the fault record for the past eight faults.	E- - - -
	Operation panel lock	Appears when operation was tried during operation panel lock.	HOLd
	Password locked	Appears when a password restricted parameter is read/written.	LOCd
	Parameter write error	Appears when an error occurred during parameter writing.	Er 1 to Er4 Er8
	Copy operation error	Appears when an error occurred during parameter copying.	rE 1 to rE8
	Error	Appears when the RES signal is on or the PU and inverter can not make normal communication.	Err.
Warning *3	Stall prevention (overcurrent)	Appears during overcurrent stall prevention.	OL
	Stall prevention (overvoltage)	Appears during overvoltage stall prevention. Appears while the regeneration avoidance function is activated.	oL
	Regenerative brake pre-alarm *8	Appears if the regenerative brake duty reaches or exceeds 85% of the **Pr.70 Special regenerative brake duty** value. If the regenerative brake duty reaches 100%, a regenerative overvoltage (E. OV[]) occurs. (Standard models only)	Rb
	Electronic thermal relay function pre-alarm	Appears when the electronic thermal O/L relay has reached 85% of the specified value.	TH
	PU stop	Appears if STOP RESET is pressed in an operation mode other than the PU operation mode.	PS
	Speed limit indication (output during speed limit)	Appears if the speed limit level is exceeded during torque control.	SL
	Continuous operation during communication fault	Appears when the operation continues while an error is occurring in the communication line or communication option (when **Pr.502** = "4").	CF
	Parameter copy	Appears when parameter copy is performed between inverters FR-A820-03160(55K) or lower, FR-A840-01800(55K) or lower, FR-A820-03800(75K) or higher and FR-A840-02160(75K) or higher	CP
	Safety stop	Appears when safety stop function is activated (during output shutoff).	SA
	Maintenance signal output 1 to 3 *8	Appears when the inverter's cumulative energization time reaches or exceeds the parameter set value.	MT 1 to MT3
	USB host error	Appears when an excessive current flows into the USB A connector.	UF
	Home position return error	Appears when an error occurs during the home position return operation under position control. (HP3 is not available on the FR-A842-P.)	HP 1 to HP3
	24 V external power supply operation	Blinks when the main circuit power supply is off and the 24 V external power supply is being input.	EV
	Load fault warning *8	Appears when the load is deviated from the upper or lower limit of the warning detection range. (This function is not available in the FR-A842-P.)	LdF
	Ethernet communication fault	Appears when Ethernet communication is interrupted by physical factors. (This function is intended for the FR-A800-E only.)	EHR
	Duplicate IP address	Appears when a duplicate IP address is detected.(This function is intended for the FR-A800-GN only.)	dI P
	IP address fault	Appears when the rotary switches are set to "0 or 255" and the value set for IP address or subnet mask is out of range.(This function is intended for the FR-A800-GN only.)	I P
Alarm *4	Fan alarm	Appears when the cooling fan remains stopped when operation is required or when the speed has decreased.	FN
	Internal fan alarm	Appears when the internal fan fails, or at a reference replacement time. (IP55 compatible models only)	FN2
Fault *5	Overcurrent trip during acceleration	Appears when an overcurrent occurred during acceleration.	E. OC 1
	Overcurrent trip during constant speed	Appears when an overcurrent occurred during constant speed operation.	E. OC2
	Overcurrent trip during deceleration or stop	Appears when an overcurrent occurred during deceleration and at a stop.	E. OC3
	Overcurrent trip	The output from a slave inverter in parallel operation is shut off if the input current exceeds the specified level. (This function is intended for the FR-A842-P only.)	E. OCT
	Regenerative overvoltage trip during acceleration	Appears when an overvoltage occurred during acceleration.	E. OV 1
	Regenerative overvoltage trip during constant speed	Appears when an overvoltage occurred during constant speed operation.	E. OV2
	Regenerative overvoltage trip during deceleration or stop	Appears when an overvoltage occurred during deceleration and at a stop.	E. OV3
	Overvoltage trip	If the DC voltage at the main circuit in a slave inverter in parallel operation reaches or exceeds the specified value, the protective circuit is activated to stop the inverter output. The circuit may also be activated by a surge voltage produced in the power supply system. (This function is intended for the FR-A842-P only.)	E. OVT
	Inverter overload trip (electronic thermal relay function) *1	Appears when the electronic thermal relay function for inverter element protection was activated.	E. THT
	Motor overload trip (electronic thermal relay function) *1	Appears when the electronic thermal relay function for motor protection was activated.	E. THM
	Heat sink overheat	Appears when the heat sink overheated.	E. FI N
	Instantaneous power failure	Appears when an instantaneous power failure occurred at an input power supply. (Standard models and IP55 compatible models only)	E. I PF

	Name	Description	Operation panel indication
Fault *5	Undervoltage	Appears when the main circuit DC voltage became low. (Standard models and IP55 compatible models only)	E. UVT
	Input phase loss *8	Appears if one of the three phases on the inverter input side opened. (Standard models and IP55 compatible models only)	E. ILF
	Stall prevention stop	Appears 3 s after the output frequency is reduced to the reference value by the stall prevention (torque limit) operation.	E. OLT
	Loss of synchronism detection	The inverter trips when the motor operation is not synchronized. This function is only available under PM sensorless vector control. (This function is not available in the FR-A842-P.)	E. SOT
	Upper limit fault detection *8	Appears when the load exceeds the upper limit of the fault detection range. (This function is not available in the FR-A842-P.)	E. LUP
	Lower limit fault detection *8	Appears when the load falls below the lower limit of the fault detection range. (This function is not available in the FR-A842-P.)	E. LdN
	Brake transistor alarm detection	The inverter trips if an alarm occurs in the brake circuit, e.g. damaged brake transistors. In this case, the inverter must be powered off immediately. (Appears when an internal circuit fault occurred for separated converter types and IP55 compatible models. This function is not available in the FR-A842-P.)	E. bE
	Output side earth (ground) fault overcurrent	Appears when an earth (ground) fault occurred on the Inverter's output side.	E. GF
	Output phase loss	Appears if one of the three phases on the inverter output side opened.	E. LF
	External thermal relay operation *6	Appears when the external thermal relay connected to terminal OH is activated.	E. OHT
	PTC thermistor operation	The inverter trips if resistance of the PTC thermistor connected between terminal 2 and terminal 10 has reached the **Pr.561 PTC thermistor protection level** setting or higher.	E. PTC
	Option fault	Appears when torque command by the plug-in option is selected using **Pr.804** and no plug-in option is mounted, or if the AC power supply is accidentally connected to terminal R/L1, S/L2, or T/L3 while **Pr.30** = "2" to connect a high power factor converter, multifunction regeneration converter, or power regeneration common converter.	E. OPT
	Communication option fault	Appears when a communication line error occurs in the communication option.	E. OP1 to E. OP3
	Parallel operation slave 1 fault	Appears on the master inverter when a fault occurs in the slave inverter during the parallel operation. Appears on the master inverter even when the RS-485 terminals are incorrectly connected. (This function is intended for the FR-A842-P only.)	E. PA1
	Parallel operation slave 2 fault		E. PA2
	Parameter storage device fault (control board)	Appears when operation of the element where parameters stored became abnormal.	E. PE
	PU disconnection	Appears when a communication error between the PU and inverter occurred, the communication interval exceeded the permissible time during the RS-485 communication with the PU connecter, or communication errors exceeded the number of retries during the RS-485 communication.	E. PUE
	Retry count excess *8	Appears when the operation was not restarted within the set number of retries. (This function is not available in the FR-A842-P.)	E. RET
	Parameter storage device fault (main circuit board)	Appears when operation of the element where parameters stored became abnormal.	E. PE2
	CPU fault	Appears during the CPU and peripheral circuit errors occurred.	E. CPU E. 5 to E. 7
	Operation panel power supply short circuit/RS-485 terminals power supply short circuit	Appears when the RS-485 terminal power supply or operation panel power supply was shorted.	E. CTE
	24 VDC power fault	When the 24 VDC power output via terminal PC is shorted, or when the external 24 VDC power supplied to terminal +24 is not enough, this function shuts off the power output.	E. P24
	Abnormal output current detection *8	Appears when the output current is out of the output current detection range set by parameters.	E. CdO
	Inrush current limit circuit fault	Appears when the resistor of the inrush current limit circuit overheated. (Standard models and IP55 compatible models only)	E. IOH
	Communication fault (inverter)	Appears when a communication error occurred during the RS-485 communication with the RS-485 terminals. (This function is not intended for the FR-A800-E.)	E. SER
	Analog input fault	Appears when 30 mA or more is input or a voltage (7.5 V or more) is input with terminal 2/4 set to current input.	E. AIE
	USB communication fault	Appears when USB communication error occurred.	E. USb
	Safety circuit fault	The inverter trips when a safety circuit fault occurs.	E. SAF
	Overspeed occurrence *8	Indicates that the motor speed has exceeded the overspeed setting level **(Pr.374)**.	E. OS
	Speed deviation excess detection *7 *8	Stops the inverter output if the motor speed is increased or decreased under the influence of the load etc. during vector control and cannot be controlled in accordance with the speed command value.	E. OSd
	Signal loss detection *7 *8	Stops the inverter output if the encoder signal is shut off.	E. ECT
	Excessive position fault *8	Indicates that the difference between the position command and position feedback exceeded the reference.	E. Od
	Brake sequence fault *8	The inverter output is stopped when a sequence error occurs during use of the brake sequence function **(Pr.278 to Pr.285)**.	E. Mb1 to E. Mb7
	Encoder phase fault *7 *8	When the rotation command of the inverter differs from the actual motor rotation direction detected from the encoder, the inverter output is stopped. (detected only during tuning is performed in the "rotation mode" of offline auto tuning) (This function is not available in the FR-A842-P.)	E. EP

	Name	Description	Operation panel indication
Fault *5	**Magnetic pole position unknown** *7	When the offset value between the motor home magnetic pole position and the resolver home position is unknown, the protective circuit is activated to stop the inverter output. (This function is not available in the FR-A842-P.)	E. MP
	External fault during output operation	When the X32 signal turns OFF (the contact opens) due to an external fault or other factor, the inverter output is shut off.	E. EF
	Abnormal internal temperature	The inverter output is stopped when the internal temperature of the inverter rises abnormally. (IP55 compatible models only)	E. IAH
	4 mA input fault *8	The inverter trips when the analog input current is 2 mA or less for the time set in **Pr.778 4 mA input check filter**.	E. LCI
	Pre-charge fault *8	The inverter trips when the pre-charge time exceeds **Pr.764 Pre-charge time limit**. The inverter trips when the measured value exceeds **Pr.763 Pre-charge upper detection level** during pre-charging.	E. PCH
	PID signal fault *8	The inverter trips if the measured value exceeds the PID upper limit or PID lower limit parameter setting, or the absolute deviation value exceeds the PID deviation parameter setting during PID control.	E. PID
	Option fault	The inverter trips when a contact fault is found between the inverter and the plug-in option, or when the communication option is not connected to the connector 1.	E. 1 to E. 3
	Ethernet communication fault	If Ethernet communication is interrupted by physical factors or a no-communication state persists for the permissible time or longer, the inverter trips. (This function is intended for the FR-A800-E only.)	E. EHR
	Opposite rotation deceleration fault *8	The speed may not decelerate during low speed operation if the rotation direction of the speed command and the estimated speed differ when the rotation is changing from forward to reverse or from reverse to forward under real sensorless vector control. At this time, the inverter output is stopped if the rotation direction will not change, causing overload.	E. 11
	Internal circuit fault	Appears when an internal circuit error occurred.	E. PBT E. 13
	User definition error by the PLC function	Appears when the values 16 to 20 are set in the device SD1214 with the program operation of the PLC function.	E. 16 to E. 20

*1 Resetting the inverter initializes the internal cumulative heat value of the electronic thermal O/L relay function.
*2 The error message shows an operational error. The inverter output is not shut off.
*3 Warnings are messages given before faults occur. The inverter output is not shut off.
*4 Alarm warn the operator of failures with output signals. The inverter output is not shut off.
*5 When faults occur, the protective functions are activated to shut off the inverter output and output the alarms.
*6 The external thermal operates only when the OH signal is set in **Pr.178 to Pr.189 (input terminal function selection)**.
*7 Appears when a vector control compatible option is installed. (The protective function may or may not be available depending on the type of the connected communication option.)
*8 This protective function is not available in the initial status.

● The list of converter unit protective functions

When the converter unit detects a fault, depending on the nature of the fault, the operation panel displays an error message or warning, or a protective function is activated to trip the inverter.

	Name	Description	Operation panel indication
Error message *2	Fault history	The operation panel stores the fault indications which appears when a protective function is activated to display the fault record for the past eight faults.	E - - - - -
	Operation panel lock	Appears when operation was tried during operation panel lock.	HOLd
	Password locked	Appears when a password restricted parameter is read/written.	LOCd
	Parameter write error	Appears when an error occurred during parameter writing.	Er 1
	Copy operation error	Appears when an error occurred during parameter copying.	rE 1 to rE4
	Error	Appears when the RES signal is on or the PU and converter unit can not make normal communication.	Err.
Warning *3	Electronic thermal relay function pre-alarm	Appears when the electronic thermal O/L relay has reached 85% of the specified value.	TH
	Maintenance signal output 1 to 3 *7	Appears when the converter unit's cumulative energization time reaches or exceeds the parameter set value.	MT 1 to MT3
	24 V external power supply operation	Blinks when the main circuit power supply is off and the 24 V external power supply is being input.	EV
Alarm *4	Fan alarm	Appears when the cooling fan remains stopped when operation is required or when the speed has decreased.	FN
Fault *5	Overvoltage trip	Appears when the converter unit's internal main circuit DC voltage exceeds the specified value.	E. OVT
	Converter overload trip (electronic thermal relay function) *1	Appears when the electronic thermal O/L relay of the converter unit diode module is activated.	E. THC
	Heat sink overheat	Appears when the heat sink overheated.	E. FIN
	Instantaneous power failure	Appears when an instantaneous power failure occurred at an input power supply.	E. IPF
	Undervoltage	Appears when power supply voltage of the converter unit is set at a low level.	E. UVT
	Input phase loss *7	Appears if one of the three phases on the converter unit input side opened.	E. ILF
	External thermal relay operation *6	Appears when the external thermal relay connected to terminal OH is activated.	E. OHT
	Parallel operation slave 1 fault	Appears on the operation panel of the master at an occurrence of a slave converter fault during the parallel operation. Appears on the master converter unit even when the RS-485 terminals are incorrectly connected. (This function is intended for the FR-CC2-P only.)	E. PA1
	Parallel operation slave 2 fault		E. PA2
	Parameter storage device fault (control board)	Appears when operation of the element where parameters stored became abnormal. (control board)	E. PE
	PU disconnection	Appears when a communication error between the PU and inverter occurred, the communication interval exceeded the permissible time during the RS-485 communication with the PU connecter, or communication errors exceeded the number of retries during the RS-485 communication.	E. PUE
	Retry count excess *7	Appears when the operation was not restarted within the set number of retries. (This function is not available for the FR-CC2-P.)	E. RET
	Parameter storage device fault (main circuit board)	Appears when operation of the element where parameters stored became abnormal. (main circuit board)	E. PE2
	CPU fault	Appears during the CPU and peripheral circuit errors occurred.	E. CPU E. 5 to E. 7
	Operation panel power supply short circuit/RS-485 terminals power supply short circuit	Appears when the RS-485 terminal power supply or operation panel power supply was shorted.	E. CTE
	24 VDC power fault	When the 24 VDC power output via terminal PC is shorted, or when the external 24 VDC power supplied to terminal +24 is not enough, this function shuts off the power output.	E. P24
	Inrush current limit circuit fault	Appears when the resistor of the inrush current limit circuit overheated.	E. IOH
	Communication fault (inverter)	Appears when a communication error occurred during the RS-485 communication with the RS-485 terminals.	E. SER
	Internal circuit fault	Appears when an internal circuit error occurred.	E. PbT
			E. 13
	Option fault	The inverter trips if a plug-in option is disconnected while the converter unit power is ON.	E. 1

*1 Resetting the converter unit initializes the internal cumulative heat value of the electronic thermal O/L relay function.
*2 The error message shows an operational error. The inverter output is not shut off.
*3 Warnings are messages given before faults occur. The inverter output is not shut off.
*4 Alarm warn the operator of failures with output signals. The inverter output is not shut off.
*5 When faults occur, the protective functions are activated to shut off the inverter output and output the alarms.
*6 The external thermal operates only when the OH signal is set in **Pr.178, Pr.180, Pr.187 or Pr.189 (input terminal function selection)**.
*7 This protective function is not available in the initial status.

Option List

By fitting the following options to the inverter, the inverter is provided with more functions.
Three plug-in options can be fitted at a time. Two or more of the same options cannot be fitted, and only one communication option can be fitted at a time. (Two options (except for communication options) can be fitted to the FR-A800-GF at a time.)

	Name	Type	Applications, Specifications, etc.	Applicable Inverter
Plug-in Type	Vector control	FR-A8AP FR-A8AL	Vector control can be performed for encoder-equipped motors (induction motors).	Shared among all models
		FR-A8APR*1 FR-A8APS*1 FR-A8APA*1	Vector control can be performed for encoder-equipped motors (induction/PM motors).	
	Orientation control Encoder feedback control	FR-A8AP FR-A8APR*1 FR-A8APS*1 FR-A8APA*1 FR-A8AL	The main spindle can be stopped at a specified position (orientation) in combination with an encoder. The motor speed is sent back and the speed is maintained constant.	
	Position control	FR-A8AL	The external pulse train input enables position control. Connection with the positioning module of a programmable controller is also available.	
		FR-A8APS*1	Position control using point tables is enabled.	
	Encoder pulse dividing output	FR-A8AL FR-A8APD*1	The encoder pulse can be divided for the signal output.	
	16-bit digital input	FR-A8AX	This input interface sets the high frequency accuracy of the inverter using an external BCD or binary digital signal. • BCD code 3 digits / 4 digits • Binary 12 bits / 16 bits	
	Digital output Extension analog output	FR-A8AY	Output signals provided with the inverter as standard are selected to output from the open collector.	
			This option adds 2 different signals that can be monitored such as the output frequency and output voltage. 20mADC or 10VDC meter can be connected.	
	Relay output	FR-A8AR	Output any three output signals available with the inverter as standard from the relay contact terminals.	
	Bipolar analog output High resolution analog input Motor thermistor interface *2	FR-A8AZ	This option adds different signals that can be monitored such as the motor torque and torque command by the ±10 V output. Highly accurate operation is achieved by using high-resolution analog input (16 bits). Thermistor-equipped motors can detect the motor temperature, and the temperature feedback is used to reduce the fluctuation of output torque.	
	Changeover between inverter and high power factor converter	FR-A8AVP	The inverter can be set to be used as a high power factor converter. The high power factor converter switches the converter section ON/OFF to reshape an input current waveform into a sine wave, greatly suppressing harmonics.	Separated converter types
	Dedicated filter capacitor	FR-A8BC		
	Dedicated filter reactor	FR-A8BL1		
	Dedicated reactor for PWM control	FR-A8BL2		
	Dedicated circuit parts for inrush current protection	FR-A8MC		
	Phase detection transformer box	FR-A8VPB		
	Phase-synchronized bypass switching	FR-A8AVP	This option allows smooth switching of the motor power supply from the inverter output power to the commercial power.	400 V class
	Phase detection transformer box	FR-A8VPB		
	Communication: CC-Link IE TSN communication	FR-A8NCG*1	This option allows the inverter to be operated or monitored or the parameter setting to be changed from a computer or programmable controller.	Shared among all models
	Communication: CC-Link IE Field Network communication	FR-A8NCE		
	Communication: CC-Link communication	FR-A8NC		
	Communication: SSCNET III(/H) communication	FR-A8NS		
	Communication: DeviceNet communication	FR-A8ND		
	Communication: PROFIBUS-DP communication	FR-A8NP		
	Communication: FL remote communication	FR-A8NF		
Control terminal	Screw terminal block	FR-A8TR	The screw type control circuit terminal block enables wiring using round crimping terminals.	Shared among all models *3
	Vector control terminal block	FR-A8TP	The control circuit terminal block equipped with the encoder power supply (24 VDC output) enables orientation control, encoder feedback control, vector control, encoder pulse division output with encoder-equipped motors (induction motors). (The 24 VDC power supply can be used for the encoder of the SF-V5RU.)	Shared among all models

	Name	Type	Applications, Specifications, etc.	Applicable Inverter
Stand-alone type	Liquid crystal display operation panel	FR-LU08(-01)	Graphical operation panel with liquid crystal display *5	Shared among all models
	Parameter unit	FR-PU07	Interactive parameter unit with LCD display	
	Parameter unit with battery pack	FR-PU07BB(-L) *6	Enables parameter setting without supplying power to the inverter.	
	Parameter unit connection cable	FR-CB20[]	Cable for connection of operation panel or parameter unit [] indicates a cable length. (1m, 3m, 5m)	
	USB cable	MR-J3USBCBL3M Cable length: 3 m	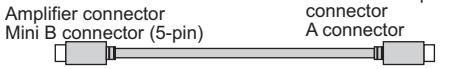	
	Operation panel connection connector	FR-ADP	Connector to connect the operation panel (FR-DU08) and connection cable	
	Encoder cable Mitsubishi Electric vector control dedicated motor (SF-V5RU)	FR-V7CBL[]	Connection cable for the inverter and encoder for Mitsubishi Electric vector control dedicated motor (SF-V5RU). [] indicates a cable length. (5m, 15m, 30m)	
	Control circuit terminal block intercompatibility attachment	FR-A8TAT	An attachment for installing the control circuit terminal block of the FR-A700/A500 series to that of the FR-A800 series	
	Panel through attachment	FR-A8CN	The heat sink of the inverter can be protruded outside the enclosure. For the enclosure cut dimensions, refer to **page 49**.	FR-A820-00105(1.5K) to FR-A820-04750(90K) FR-A840-00023(0.4K) to FR-A840-03610(132K) According to capacities
	Intercompatibility attachment	FR-AAT	Attachment for replacing with the A800 series using the installation holes of the FR-A700/A500/A200E series.	According to capacities
		FR-A5AT		
	AC reactor	FR-HAL	For harmonic current reduction and inverter input power factor improvement	
	DC reactor	FR-HEL		
	Balance reactor	FR-POL	This option is used when the cable length from an inverter to the node point is less than 10 m.	FR-A842-P. According to capacities.
	Line noise filter	FR-BSF01	For line noise reduction	Shared among all models
		FR- BLF		
	High-duty brake resistor	FR-ABR	The regenerative braking capability can be improved (permissible duty 10%/6%ED).	FR-A820-01250(22K) or lower, FR-A840-00620(22K) or lower *4
	Brake unit	FR-BU2	For increasing the braking capability of the inverter (for high-inertia load or negative load) Brake unit and resistor unit are used in combination	According to capacities
	Resistor unit	FR-BR		FR-A820-03160(55K) or lower, FR-A840-01800(55K) or lower *4
		MT-BR5		FR-A820-03800(75K) or higher, FR-A840-02160(75K) or higher *4
	Multifunction regeneration converter Dedicated stand-alone reactor Dedicated box-type reactor	FR-XC FR-XCL FR-XCB	One inverter can handle harmonic suppression and power regeneration. Functions that match the application can be selected by combining the inverter/converter with the dedicated reactor FR-XCB (box-type) or FR-XCL.	According to capacities
	Power regeneration common converter Stand-alone reactor dedicated for the FR-CV	FR-CV/ FR-CVL	Unit which can return motor-generated braking energy back to the power supply in common converter system	FR-A820-03160(55K) or lower, FR-A840-01800(55K) or lower *4
	Power regeneration converter	MT- RC	Energy saving type high performance brake unit which can regenerate the braking energy generated by the motor to the power supply.	FR-A840-02160(75K) or higher *4
	High power factor converter	FR-HC2	The high power factor converter switches the converter section on/off to reshape an input current waveform into a sine wave, greatly suppressing harmonics. (Used in combination with the standard accessory.)	According to capacities
	Surge voltage suppression filter	FR-ASF	Filter for suppressing surge voltage on motor	FR-A840-01800(55K) or lower *4
		FR-BMF		FR-A840-00170(5.5K) to FR-A840-00930(37K) *4 According to capacities
	Sine wave filter — Reactor	MT- BSL (-HC)	Reduce the motor noise during inverter driving Use in combination with a reactor and a capacitor	FR-A820-03800(75K) or higher, FR-A840-02160(75K) or higher *4 According to capacities
	Sine wave filter — Capacitor	MT- BSC		
Others	Pilot generator	QVAH-10	For tracking operation. 70V/35VAC 500Hz (at 2500r/min)	Shared among all models
	Deviation sensor	YVGC-500W-NS	For continuous speed control operation (mechanical deviation detection) Output 90VAC/90°	
	Analog frequency meter (64mm × 60mm)	YM-206NRI 1mA	Dedicated frequency meter (graduated to 130Hz). Moving-coil type DC ammeter	
	Calibration resistor	RV24YN 10kΩ	For frequency meter calibration. Carbon film type B characteristic	
	FR Configurator2 (Inverter setup software)	SW1DND-FRC2-E	Supports an inverter startup to maintenance.	

*1 Not available for the FR-A842-P.
*2 The motor thermistor interface is not available when the FR-A842-P is used.
*3 Not available for the FR-A800-E.
*4 Applicable inverters for the ND rating. For the SLD, LD, and HD ratings, different inverters are used depending on the applicable motor capacity.
*5 The battery (CR1216: a diameter of 12 mm, a hight of 16 mm) is not bundled.
*6 To use a parameter unit with battery pack (FR-PU07BB) outside Japan, order a "FR-PU07BB-L" (parameter unit type indicated on the package has L at the end). Since batteries may conflict with laws in countries to be used (new EU Directive on batteries and accumulators, etc.), batteries are not enclosed with an FR-PU07BB.

● Changeover between inverter and high power factor converter

Name (model)	Specification and structure

Changeover between inverter and high power factor converter
FR-A8AVP
FR-A8VPB-H
FR-A8BL1-H[]
FR-A8BL2-H[]
FR-A8BC-H[]
FR-A8MC-H[]

Certain inverters can be changed to high power factor converters by installing the FR-A8AVP and configuring its parameters. The following options are needed to use the converter: phase detection transformer box, dedicated filter reactor, dedicated reactor for PWM control, dedicated filter capacitor, inrush current limit resistor. The converter can be changed back to an inverter.

• Option lineup for the converter

Peripheral device	Component model	Name
FR-A8VPB-H	FR-A8VPB-H	Phase detection transformer box
FR-A8BL1-H[]	FR-A8BL1-H[]	Dedicated filter reactor
FR-A8BL2-H[]	FR-A8BL2-H[]	Dedicated reactor for PWM control
FR-A8BC-H[]	FR-A8BC-H[]	Dedicated filter capacitor

Peripheral device	Component model	Name
FR-A8MC-H[]		Dedicated circuit parts for inrush current protection
	BKO-CA2573H01	Inrush current limit resistor (without thermostat)
	BKO-CA2573H11	Inrush current limit resistor (with thermostat)
	BKO-CA2571H01	Stepdown transformer for power source of magnetic contactor (400 to 220 V)
	S-N400 AC200V 2A2B	Inrush current limit magnetic contactor
	SR-T5 AC200V 5A	Buffer relay
	MYQ4Z AC200/220	Mini relay
	PYF14T	Mini relay terminal block
	PYC-A1	Mini relay clip

• Combination table

Capacity required	Converter	Phase detection option	Phase detection transformer box	Dedicated filter reactor	Dedicated reactor for PWM control	Dedicated filter capacitor	Dedicated circuit parts for inrush current protection
315kW	FR-A842-315K	FR-A8AVP	FR-A8VPB-H	FR-A8BL1-H315K	FR-A8BL2-H315K	FR-A8BC-H400K	FR-A8MC-H355K
355kW	FR-A842-355K			FR-A8BL1-H355K	FR-A8BL2-H355K		
400kW	FR-A842-400K			FR-A8BL1-H400K	FR-A8BL2-H400K		FR-A8MC-H500K
450kW	FR-A842-450K			FR-A8BL1-H450K	FR-A8BL2-H450K	FR-A8BC-H500K	
500kW	FR-A842-500K			FR-A8BL1-H500K	FR-A8BL2-H500K		

• Converter rated specifications

Model FR-A842-[]	07700	08660	09620	10940	12120
	315K	355K	400K	450K	500K
Applicable inverter capacity (kW)	315	355	400	450	500
Rated output capacity∗1	375	423	476	536	595
Rated voltage (V)∗2∗3	Three-phase 380 to 500 V 50 Hz/60 Hz∗6∗7				
Rated current (A)	564	636	716	806	895
Overload current rating∗4	150% 60s				
Permissible power supply voltage fluctuation	323 to 506 V 50 Hz/60 Hz				
Permissible power supply frequency fluctuation	±5%				
Input power factor	0.99 or more (when load ratio is 100%)				
Power supply capacity (kVA)	456	515	580	652	724
Protective structure of the converter∗5	Open type (IP00)				
Cooling system	Forced air				
Approx. mass (kg)	163	163	243	243	243

∗1 DC output capacity when the input voltage is 400 VAC. Multiple ratings are not supported.
∗2 Change the stepdown transformer tap according to the input voltage.
∗3 The output voltage is approx. 594 VDC at an input voltage of 400 VAC, approx. 653 VDC at 440 VAC, and approx. 742 VDC at 500 VAC.
∗4 The percentage of the overload current rating is the ratio of the overload current to the converter's rated input current. For repeated duty, allow time for the temperatures of the converter and the inverter to return to or below the temperatures under 100% load.
∗5 FR-DU08: IP40 (except for the PU connector)
∗6 The permissible voltage imbalance ratio is 3% or less. (Imbalance ratio = (highest voltage between lines - average voltage between three lines)/ average voltage between three lines × 100)
∗7 The rated voltage when connecting a motor to the FR-A840-02160(75K) and FR-F840-02160(90K) or higher. If connecting a motor to inverters other than those mentioned above, the rated voltage is 380 to 480 V.

Name (model)	Specification and structure

Changeover between inverter and high power factor converter
FR-A8AVP
FR-A8VPB-H
FR-A8BL1-H[]
FR-A8BL2-H[]
FR-A8BC-H[]
FR-A8MC-H[]

• Connection diagram

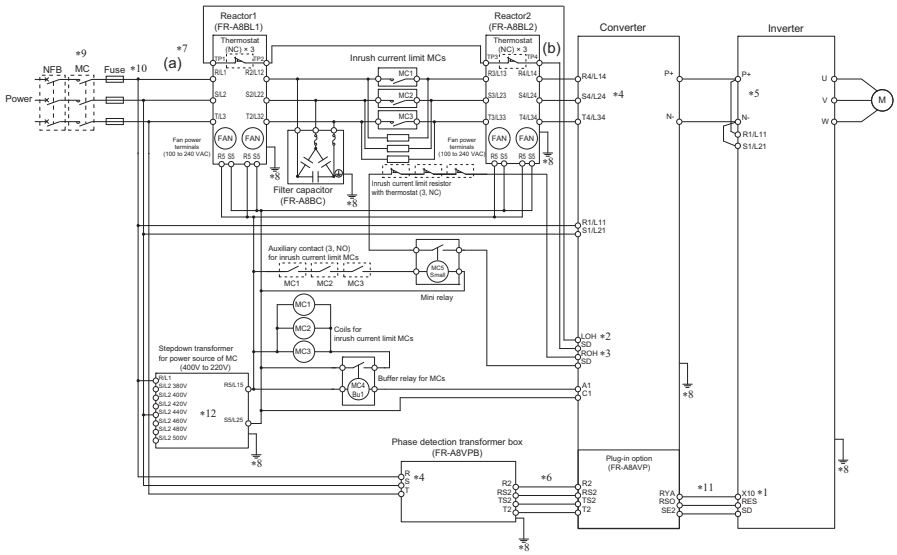

∗1 Use the Input terminal function selection to assign the X10 signal to a terminal. The signal is assigned to terminal MRS in the initial status.
∗2 The LOH signal function is assigned to terminal RT in the initial status. Set "33" in any of **Pr.178 to Pr.189** (Input terminal function selection) to assign the LOH signal to another terminal.
∗3 The ROH signal function is assigned to terminal AU in the initial status. Set "34" in any of **Pr.178 to Pr.189** (input terminal function selection) to assign the ROH signal to another terminal.
∗4 Confirm the correct voltage phase sequence between the converter (terminals R4/L14, S4/L24, and T4/L34) and the phase detection transformer box (terminals R, S, and T).
∗5 Do not install any MCCB between the inverter and the converter (P to P and N to N). Connecting opposite polarity of terminals P and N will damage the converter and the inverter.
∗6 Always connect terminals R2, RS2, TS2, and T2 of the FR-A8AVP installed on the converter and the identically-named terminals of the phase detection transformer box. If the inverter is operated without connecting between the terminals, the converter will be damaged.
∗7 Do not install an MCCB or MC between the reactor 1 input terminals (R/L1, S/L2, and T/L3) (a) and the converter input terminals (R4/L14, S4/L24, and T4/L34) (b) except for those specified in the connection diagram. Doing so disrupts proper operation.
∗8 Securely perform grounding (earthing) by using the grounding (earthing) terminal.
∗9 Install an MC for each phase.
∗10 Install the UL listed fuse (specified in the Instruction Manual of the FR-A8AVP) on the input side of the FR-A842 converter to meet the UL/cUL standards.
∗11 Always connect terminal RYA on the FR-A8AVP (installed on the converter) and the inverter terminal to which the X10 signal is assigned, and connect terminal SE2 on the FR-A8AVP and the inverter terminal SD (terminal PC in the source logic). Failure to do so may lead to damage of the converter.
∗12 Select a terminal S/L2 according to the input voltage.

• Outline dimension drawings
This is an example of the outer appearance, which differs depending on the model.

<<FR-A8BL1-H315K to H500K>>

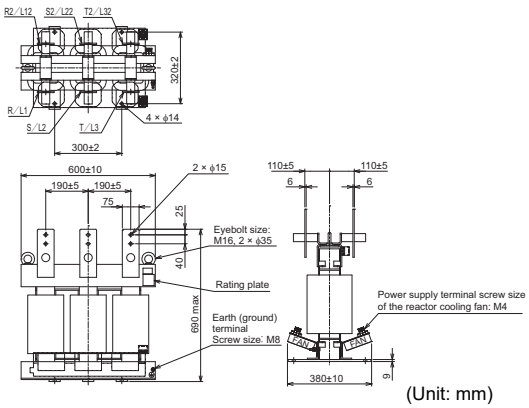

(Unit: mm)

<<FR-A8BL2-H315K to H500K>>

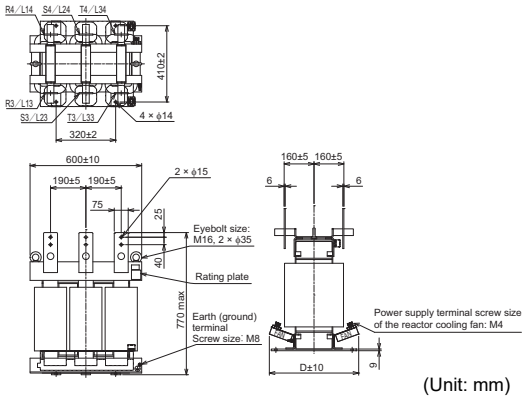

(Unit: mm)

Model name	Mass
FR-A8BL1-H315K	198kg
FR-A8BL1-H355K	209kg
FR-A8BL1-H400K	209kg
FR-A8BL1-H450K	209kg
FR-A8BL1-H500K	215kg

Model name	Mass
FR-A8BL2-H315K	380kg
FR-A8BL2-H355K	385kg
FR-A8BL2-H400K	429kg
FR-A8BL2-H450K	457kg
FR-A8BL2-H500K	457kg

Model name	D
FR-A8BL2-H315K to H355K	460
FR-A8BL2-H400K to H500K	480

Name (model)	Specification and structure

Changeover between inverter and high power factor converter
FR-A8AVP
FR-A8VPB-H
FR-A8BL1-H[]
FR-A8BL2-H[]
FR-A8BC-H[]
FR-A8MC-H[]

<<FR-A8VPB-H>>

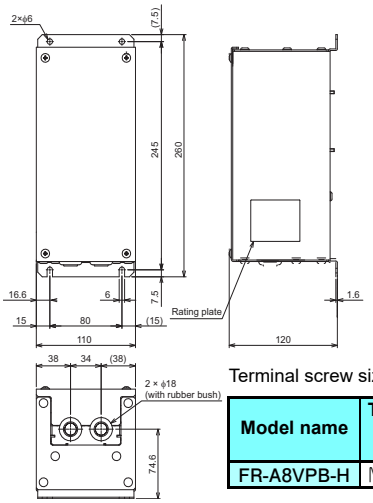

Terminal block

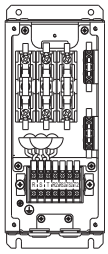

(Unit: mm)
Mass: 3.2 kg

Terminal screw size

Model name	Terminals R, S, T, R2, RS2, TS2, and T2	Earth (ground) terminal
FR-A8VPB-H	M3.5	M3.5

<<FR-A8BC-H400K>>

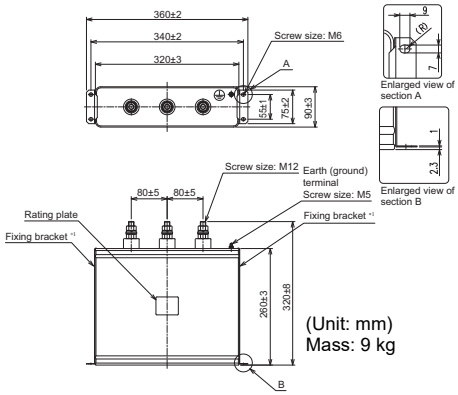

(Unit: mm)
Mass: 9 kg

*1 Attach the fixing brackets to the capacitor.

<<FR-A8BC-H500K>>

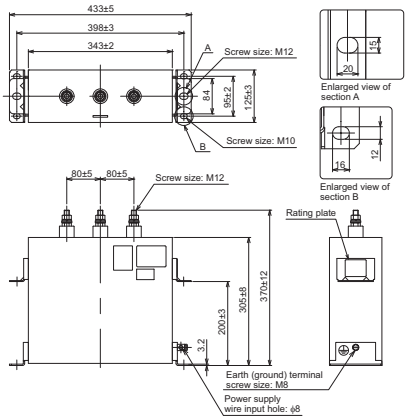

(Unit: mm)
Mass: 20 kg

<<FR-A8MC-H355K, H500K>>

Inrush current limit MC (S-N400 AC200 V 2A2B)

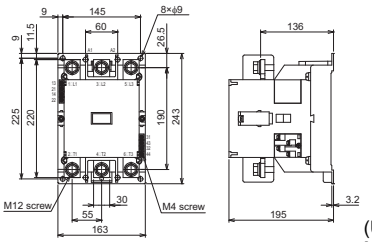

(Unit: mm)
Mass: 9.5 kg

MC power supply stepdown transformer (BKO-CA2571H01)

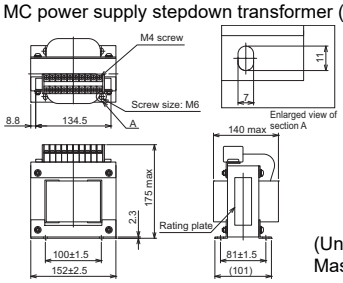

(Unit: mm)
Mass: 35 g

Mini relay terminal block (PYF14T)

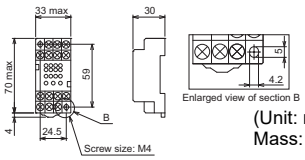

(Unit: mm)
Mass: 53 g

Mini relay (MYQ4Z AC200/220)

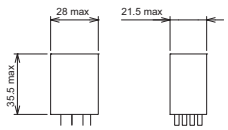

(Unit: mm)
Mass: 35 g

Buffer relay (SR-T5 AC200 V 5 A)

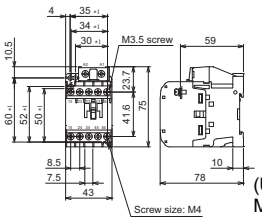

(Unit: mm)
Mass: 0.27 kg

*1 The position of the upper-left mounting hole is selectable. Combinations of the horizontal and vertical dimensions are as follows: 35 and 60, 30 and 60, 34 and 52, 35 and 50-52.

Inrush current limit resistor
with thermostat (BKO-CA2573H11)
without thermostat (BKO-CA2573H01)

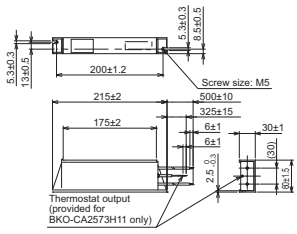

(Unit: mm)
Mass: 0.8 kg

● Phase-synchronized bypass switching

Name (model)	Specification and structure
Phase-synchronized bypass switching FR-A8AVP FR-A8VPB-H	The phase-synchronized bypass switching function permits smooth switching of the motor power supply from the inverter output power to the commercial power. The shock caused by the switch is suppressed because the inverter output voltage phase is synchronized with the commercial power voltage phase. Use with a phase detection transformer box (FR-A8VPB-H). • Connection diagram <<Example for the standard model or IP55 compatible model of the FR-A800 series inverter>>

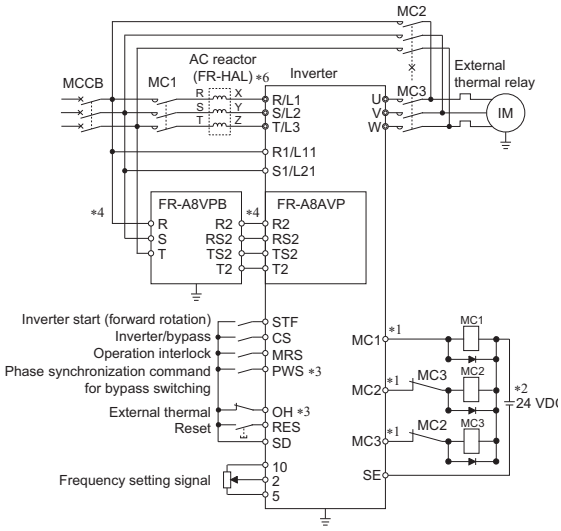

<<Example for the separated converter type of the FR-A800 series inverter>>

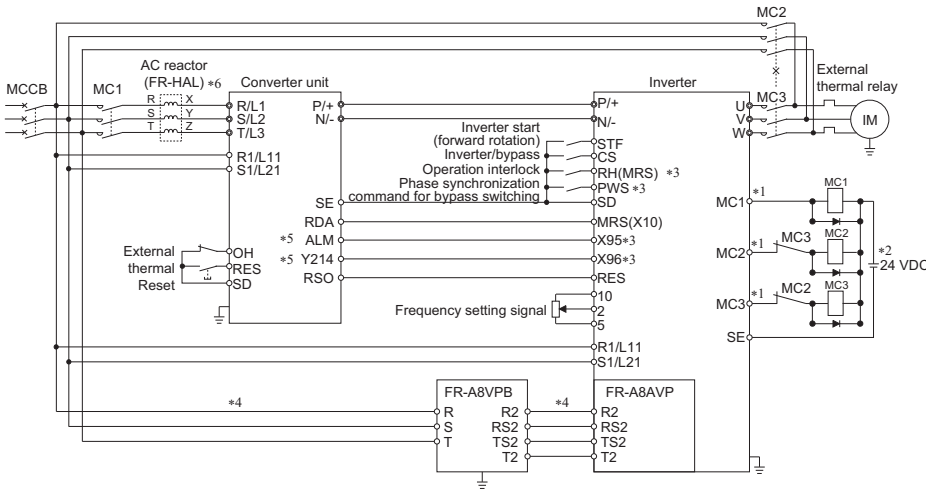

*1 Be careful of the capacity of the sequence output terminals. The applied terminals differ depending on the settings of **Pr.190 to Pr.196** (Output terminal function selection).

Output terminal capacity	Output terminal permissible load
Open collector output of inverter (RUN, SU, IPF, OL, FU)	24 VDC 0.1 A
Inverter relay output (A1-C1, B1-C1, A2-B2, B2-C2) Relay output option (FR-A8AR)	230 VAC 0.3 A 30 VDC 0.3 A

*2 When connecting a DC power supply, insert a protective diode. When connecting an AC power supply, use the relay output option (FR-A8AR), and use contact outputs.

*3 The applied terminals differ depending on the settings of **Pr.180 to Pr.189** (Input terminal function selection).

*4 Use the wires satisfying the following requirements for each wiring location.

Wiring location	Wire gauge (mm^2)	Total wiring length
Wiring between the power supply and the phase detection transformer box	2	10 m or less
Wiring between the phase detection transformer box and the inverter	0.75 to 1.25	5 m or less

*5 To use the signal, assign the function to the output terminal using **Pr.190 to Pr.195** (Output terminal function selection) in the converter unit. Always set the negative logic for the ALM signal.

*6 When using an AC reactor, connect the reactor as specified in the diagram.

● Control terminal option

Name (model)	Specification and structure
Screw terminal block FR-A8TR	Replace the standard control circuit terminal block with this option (Not available for the FR-A800-E). • Terminal layout Terminal screw size : M3.5 Tightening torque : 1.2 N·m Recommended cable gauge : 0.75 mm^2 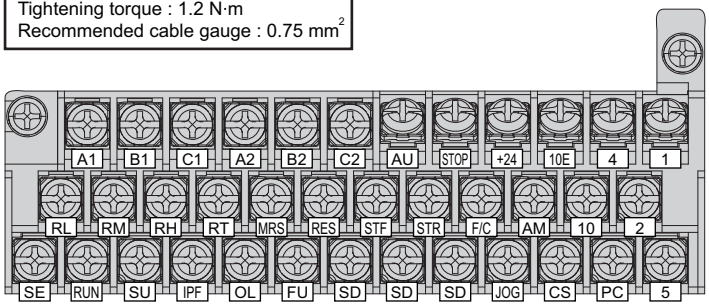 • Restrictions for the FR-A8TR As compared with the standard control circuit terminal block, the FR-A8TR has the following restrictions. (a) When the plug-in option FR-A8NS is used, terminals +24, 10E, 4, STOP, and AU of the FR-A8TR cannot be used. (b) Because the height is restricted, two wires cannot be wired to upper-row terminals (except for terminals A1, B1, C1, A2, B2, and C2) and middle-row terminals on the terminal block. (c) The safety stop function is not available. (d) For the connection to terminal 1, use a screwdriver with a diameter of 4 mm or less. To avoid contact with the front cover fixing area, put the screwdriver upright relative to the terminal screw surface. 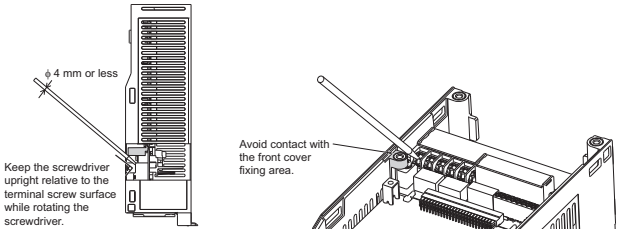 (e) Make sure that the square washers are not turned out of position before tightening screws. 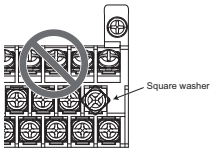

Name (model)	Specification and structure
Vector control terminal block FR-A8TP 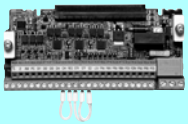	Replace the standard control circuit terminal block with this option. The 24 VDC power supply can be used for the encoder of the SF-V5RU.

• Terminal connection diagrams

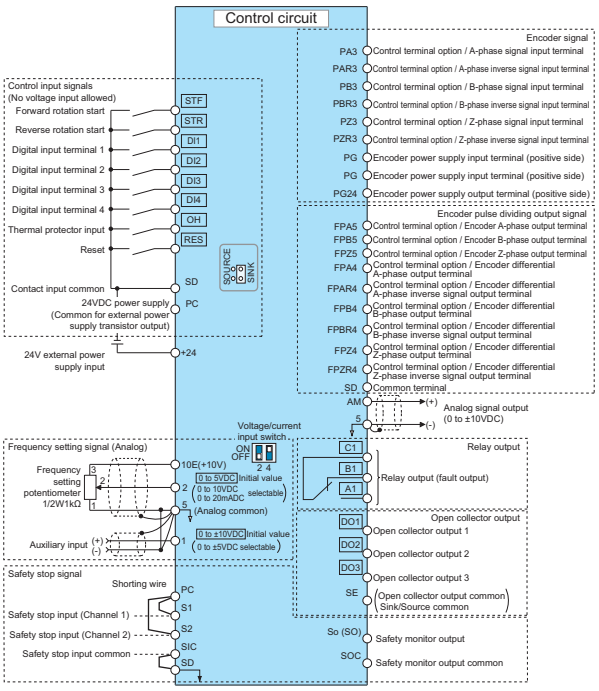

• Control terminal layout

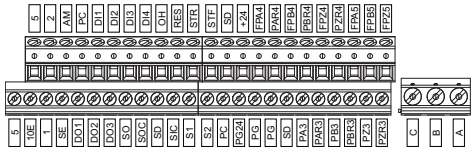

Tightening torque: 0.5 N•m to 0.6 N•m (terminals A, B, and C)
0.22 N•m to 0.25 N•m (terminals other than described above)
Small flat-blade screwdriver (Tip thickness: 0.4 mm / tip width: 2.5 mm)

• Control terminal specification

[Input signal]

Function	Terminal symbol	Terminal name	Terminal function description
Contact input	DI1 to DI4	Digital input terminal 1 to 4	Functions can be assigned to terminals by the input terminal function selection **(Pr.180 to Pr.182, Pr.185)**.
	OH	Thermal protector input	Temperature detector input terminal for overheat protection of a motor. When the OH signal turns OFF, the external thermal relay (E.OHT) protective function is activated Use **Pr.876** to switch valid/invalid status of terminal function. Switches the control logic (sink logic or source logic) independently by the external thermal relay switch (SW5A).
Encoder signal	PA3	Control terminal option / A-phase signal input terminal	A-, B- and Z-phase signals are input from the encoder.
	PAR3	Control terminal option / A-phase inverse signal input terminal	
	PB3	Control terminal option / B-phase signal input terminal	
	PBR3	Control terminal option / B-phase inverse signal input terminal	
	PZ3	Control terminal option / Z-phase signal input terminal	
	PZR3	Control terminal option / Z-phase inverse signal input terminal	
	PG	Encoder power supply terminal (positive side)	Input power for the encoder power supply. Connect the external power supply (5 V, 12 V, 15 V) and the encoder power cable. When the encoder output is the differential line driver type, only 5 V can be input. Make sure the voltage of the external power supply the same as the encoder output voltage. (Check the encoder specification.) Short terminals PG24 and PG for using the 24 VDC power supply of the FR-A8TP.

Name (model)	Specification and structure
Vector control terminal block FR-A8TP 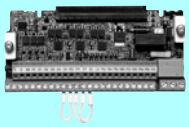	[Output signal]

Function	Terminal symbol	Terminal name	Terminal function description
Open collector	DO1 to DO3	Digital output terminal 1 to 3	The function can be assigned to an output terminal by the output terminal function selection **(Pr.190 to Pr.192)**.
	SE	Open collector output common	Common terminal for terminals DO1, DO2, DO3. Isolated from terminals SD and 5.
Encoder pulse dividing output	FPA5	Control terminal option / Encoder A-phase output terminal	Outputs A-, B- and Z-phase (home position and mark pulse) signals from the encoder. The A- and B-phase signals can be divided by the ratio (1/n) and output. n=1 to 32767 (an integer) Use **Pr.863 Control terminal option-Encoder pulse division ratio** for division. Common terminal is terminal SD.
	FPB5	Control terminal option / Encoder B-phase output terminal	
	FPZ5	Control terminal option / Encoder Z-phase output terminal	
	FPA4	Control terminal option / Encoder differential A-phase output terminal	Outputs A-, B- and Z-phase (home position and mark pulse) signals from the encoder. The A- and B-phase signals can be divided by the ratio (1/n) and output. n=1 to 32767 (an integer) Use **Pr.863 Control terminal option-Encoder pulse division ratio** for division.
	FPAR4	Control terminal option / Encoder differential A-phase inverse signal output terminal	
	FPB4	Control terminal option / Encoder differential B-phase output terminal	
	FPBR4	Control terminal option / Encoder differential B-phase inverse signal output terminal	
	FPZ4	Control terminal option / Encoder differential Z-phase output terminal	
	FPZR4	Control terminal option / Encoder differential Z-phase inverse signal output terminal	
Power supply output for encoder	PG24	Encoder power supply terminal (positive side)	Used for the 24 VDC power supply for an encoder. If used, connect this terminal to terminal PG, and this will supply power from terminal PG to the encoder.

Specifications are the same as those of the standard control circuit terminals for the input signals (STF, STR, RES, SD, PC, 10E, 2, 1, 5, and +24) and the output signals (A, B, C, AM, S1, S2, SIC, So (SO), and SOC).

● Stand-alone option

Name (model)	Specification and structure

Panel through attachment FR-A8CN[]

With this attachment the heat sink which is the exothermic section of the inverter can be placed on the rear of the enclosure. Since the heat generated in the inverter can be radiated to the rear of the enclosure, the enclosure can be downsized.
The use of this attachment requires more installation area. For installation, refer to the drawing after attachment installation (**page 49**).
For a panel cutting drawing, refer to **page 49**.

• Applicable models

Model	Applicable inverter	
	FR-A820	FR-A840
FR-A8CN01	00105(1.5K), 00167(2.2K), 00250(3.7K)	00023(0.4K), 00038(0.75K), 00052(1.5K), 00083(2.2K), 00126(3.7K)
FR-A8CN02	00340(5.5K), 00490(7.5K)	00170(5.5K), 00250(7.5K)
FR-A8CN03	00630(11K)	00310(11K), 00380(15K)
FR-A8CN04	00770(15K), 00930(18.5K), 01250(22K)	00470(18.5K), 00620(22K)
FR-A8CN05	01540(30K)	00770(30K)
FR-A8CN06	01870(37K), 02330(45K)	00930(37K), 01160(45K), 01800(55K)
FR-A8CN07	03160(55K)	—
FR-A8CN08	03800(75K), 04750(90K)	03250(110K), 03610(132K)
FR-A8CN09	—	02160(75K), 02600(90K)

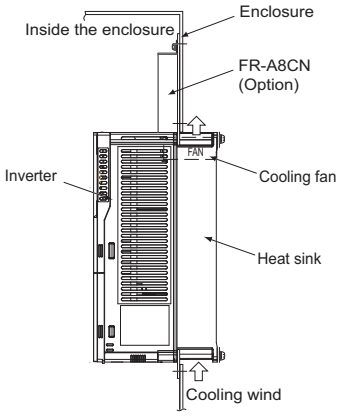

Intercompatibility attachment FR-AAT[] FR-A5AT[]

Enables the FR-A800 inverter to be installed using the mounting holes made for the conventional FR-A700/A500/A200E series inverter.
This attachment is useful for replacing a conventional inverter with the FR-A800 series inverter.
The inverter with this attachment requires greater installation depth.

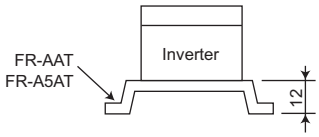

• Models replaceable with FR-A820

			FR-A820							
			0.4K/0.75K	1.5K to 3.7K	5.5K/7.5K	11K	15K to 22K	30K	37K/45K	55K
Conventional model and capacity	FR-A220E	0.4K/0.75K	FR-A5AT01	—	—	—	—	—	—	—
		1.5K to 3.7K	FR-A5AT02	FR-A5AT02	—	—	—	—	—	—
		5.5K to 11K	—	FR-A5AT03	FR-A5AT03	○	—	—	—	—
		15K	—	—	FR-AAT02	FR-AAT24	○	—	—	—
		18.5K/22K	—	—	—	FR-A5AT04	FR-A5AT04	—	—	—
		30K	—	—	—	—	FR-AAT27	○	—	—
		37K/45K	—	—	—	—	—	FR-AAT23	○	—
		55K	—	—	—	—	—	—	FR-A5AT05	○
	FR-A520/A720	0.4K/0.75K	○	—	—	—	—	—	—	—
		1.5K to 3.7K	FR-AAT21	○	—	—	—	—	—	—
		5.5K/7.5K	—	FR-AAT22	○	—	—	—	—	—
		11K	—	—	FR-A5AT03	○	—	—	—	—
		15K to 22K	—	—	—	FR-AAT24	○	—	—	—
		30K	—	—	—	—	FR-AAT27	○	—	—
		37K/45K	—	—	—	—	—	FR-AAT23	○	—
		55K	—	—	—	—	—	—	FR-A5AT05	○

• Models replaceable with FR-A840

			FR-A840					
			0.4K to 3.7K	5.5K/7.5K	11K/15K	18.5K/22K	30K	37K to 55K
Conventional model and capacity	FR-A240E	0.4K to 3.7K	FR-A5AT02	—	—	—	—	—
		5.5K/7.5K	FR-A5AT03	FR-A5AT03	—	—	—	—
		11K/15K	—	FR-AAT02	FR-AAT24	—	—	—
		18.5K/22K	—	—	FR-A5AT04	FR-A5AT04	—	—
		30K	—	—	—	FR-AAT27	○	—
		37K/45K	—	—	—	—	FR-AAT23	○
		55K	—	—	—	—	—	FR-A5AT05
	FR-A540	0.4K to 3.7K	○	—	—	—	—	—
		5.5K/7.5K	FR-AAT22	○	—	—	—	—
		11K to 22K	—	FR-AAT02	FR-AAT24	○	—	—
		30K	—	—	—	FR-AAT27	○	—
		37K to 55K	—	—	—	—	FR-AAT23	○
	FR-A740	0.4K to 3.7K	○	—	—	—	—	—
		5.5K/7.5K	FR-AAT22	○	—	—	—	—
		11K/15K	—	FR-A5AT03	○	—	—	—
		18.5K/22K	—	—	FR-AAT24	○	—	—
		30K	—	—	—	FR-AAT27	○	—
		37K to 55K	—	—	—	—	FR-AAT23	○

○: Replaceable without the intercompatibility attachment
FR-A5AT[], FR-AAT[]: Replaceable with the intercompatibility attachment.

Name (model)	Specification and structure

Control circuit terminal block intercompatibility attachment FR-A8TAT

This attachment allows the conventional FR-A700/A500 series control circuit terminal blocks to be installed without removing any cables. This attachment is useful for replacing a conventional inverter with the FR-A800 series inverter.

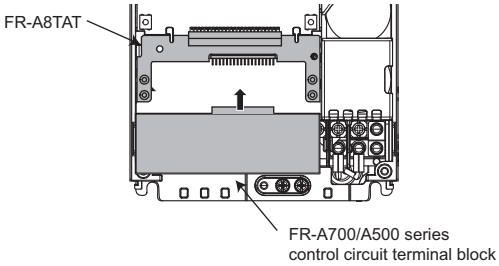

(a) For using the control circuit terminal block of the FR-A500 series, open or remove the cover of the control circuit terminal block. Otherwise, the front cover of the inverter may not close properly.

(b) Since the specifications of the control circuit terminals of the FR-A700/A500 series are different from those of the FR-A800 series, certain functions of the inverter are restricted (refer to the table below).

	Relay output 2 terminals	24 V external power supply input terminal	Safety stop signal terminals
FR-A500 series	×	×	×
FR-A700 series	○	×	×

○ ... Available, ×... Not available

(c) The FR-A8NC, FR-A8NCE, or FR-A8NS plug-in option cannot be installed.

(d) When using a plug-in option, connect the plug-in option using a cable that can be routed through the space between the front cover and the control circuit terminal block (FR-A700 series: 7 mm, FR-A500 series: 0.8 mm).

AC reactor (for power supply coordination) FR-HAL-(H)[]K

Improves the power factor and reduces the harmonic current at the input side. Connect an AC reactor at the input side of the inverter.

• Selection method

Select an AC reactor according to the applied motor capacity. (Select the AC reactor according to the motor capacity even if the capacity is smaller than the inverter capacity.)

• Connection diagram

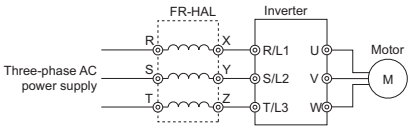

• Outline dimension (Unit: mm)

	Model	W	W1	H	D	D1	d	Mass (kg)
200 V	**0.4K**	104	84	99	72	40	M5	0.6
	0.75K	104	84	99	74	44	M5	0.8
	1.5K	104	84	99	77	50	M5	1.1
	2.2K	115	40	115	77	57	M6	1.5
	3.7K	115	40	115	83	67	M6	2.2
	5.5K	115	40	115	83	67	M6	2.3
	7.5K	130	50	135	100	86	M6	4.2
	11K	160	75	164	111	92	M6	5.2
	15K	160	75	167	126	107	M6	7.0
	18.5K	160	75	128	175	107	M6	7.1
	22K	185	75	150	158	87	M6	9.0
	30K	185	75	150	168	87	M6	9.7
	37K	210	75	175	174	82	M6	12.9
	45K	210	75	175	191	97	M6	16.4
	55K	210	75	175	201	97	M6	17.4
	75K	240	150	210	215.5	109	M8	23
	110K	330	170	325	259	127	M10	40

	Model	W	W1	H	D	D1	d	Mass (kg)
400 V	**H0.4K**	135	120	115	64	45	M4	1.5
	H0.75K	135	120	115	64	45	M4	1.5
	H1.5K	135	120	115	64	45	M4	1.5
	H2.2K	135	120	115	64	45	M4	1.5
	H3.7K	135	120	115	74	57	M4	2.5
	H5.5K	160	145	142	76	55	M4	3.5
	H7.5K	160	145	142	96	75	M4	5.0
	H11K	160	145	146	96	75	M4	6.0
	H15K	220	200	195	105	70	M5	9.0
	H18.5K	220	200	215	170	70	M5	9.0
	H22K	220	200	215	170	70	M5	9.5
	H30K	220	200	215	170	75	M5	11
	H37K	220	200	214	170	100	M5	12.5
	H45K	280	255	245	165	80	M6	15
	H55K	280	255	245	170	90	M6	18
	H75K	210	75	170	210.5	105	M6	20
	H110K	240	150	225	220	99	M8	28
	H185K	330	170	325	271	142	M10	55
	H280K	330	170	325	321	192	M10	80
	H355K	330	170	325	346	192	M10	90
	H560K	450	300	540	635	345	M12	190

(a) Approximately 88% of the power factor improving effect can be obtained (92.3% when calculated with 1 power factor for the fundamental wave according to the Architectural Standard Specifications (Electrical Installation) (2013 revision) supervised by the Ministry of Land, Infrastructure, Transport and Tourism of Japan).

(b) This is a sample outline dimension drawing. The shape differs by the model. W1 and D1 indicate distances between installation holes. The installation hole size is indicated by d.

(c) When installing an AC reactor (FR-HAL), install in the orientation shown below.
•(H)55K or lower: Horizontal installation or vertical installation
•(H)75K or higher: Horizontal installation

(d) Keep enough clearance around the reactor because it heats up.
(Keep a clearance of minimum 10cm each on top and bottom and minimum 5cm each on right and left regardless of the installation orientation.)

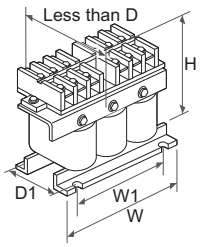

Name (model)	Specification and structure

DC reactor (for power supply coordination) FR-HEL-(H)[]K

Improves the power factor and reduces the harmonic current at the input side.
Make sure to install this option for the FR-A820-03800(75K) or higher and the FR-A840-02160(75K) or higher. Also install this option when using a motor of 75 kW or higher capacity. (The IP55 compatible model has a built-in DC reactor.)

• Selection method
Select a DC reactor according to the applied motor capacity. (Select it according to the motor capacity even if the capacity is smaller than the inverter capacity.) (Refer to **page 223**.)

• Connection diagram
Connect a DC reactor to the inverter terminals P1 and P. Remove the jumper across terminals P1 and P. If the jumper is left attached, no power factor improvement can be obtained. (The jumper is not installed for the FR-A820-03800(75K) or higher and the FR-A840-02160(75K) or higher.)
The connection cable between the reactor and the inverter should be as short as possible (5m or less).

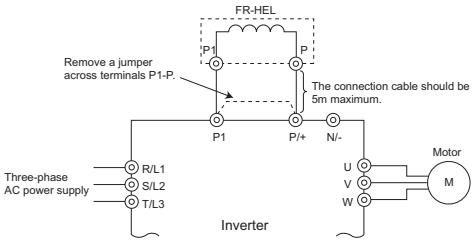

• Outline dimension (Unit: mm)

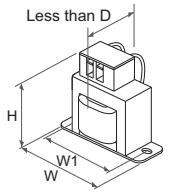

FR-HEL-0.4K to 2.2K
FR-HEL-H0.4K

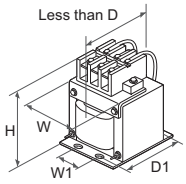

FR-HEL-3.7K to 55K
FR-HEL-H0.75K to H55K

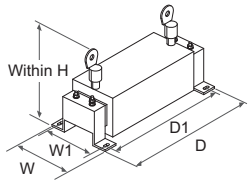

FR-HEL-75K to 110K
FR-HEL-H75K to H355K

	Model	W	W1	W1	D	D1	d	Mass (kg)
200 V	**0.4K**	70	60	71	61	-	M4	0.4
	0.75K	85	74	81	61	-	M4	0.5
	1.5K	85	74	81	70	-	M4	0.8
	2.2K	85	74	81	70	-	M4	0.9
	3.7K	77	55	92	82	57	M4	1.5
	5.5K	77	55	92	92	67	M4	1.9
	7.5K	86	60	113	98	72	M4	2.5
	11K	105	64	133	112	79	M6	3.3
	15K	105	64	133	115	84	M6	4.1
	18.5K	105	64	93	165	94	M6	4.7
	22K	105	64	93	175	104	M6	5.6
	30K	114	72	100	200	101	M6	7.8
	37K	133	86	117	195	98	M6	10
	45K	133	86	117	205	108	M6	11
	55K	153	126	132	209	122	M6	12.6
	75K	150	130	190	340	310	M6	17
	90K	150	130	200	340	310	M6	19
	110K	175	150	200	400	365	M8	20

	Model	W	W1	W1	D	D1	d	Mass (kg)
400 V	**H0.4K**	90	75	78	60	-	M5	0.6
	H0.75K	66	50	100	70	48	M4	0.8
	H1.5K	66	50	100	80	54	M4	1
	H2.2K	76	50	110	80	54	M4	1.3
	H3.7K	86	55	120	95	69	M4	2.3
	H5.5K	96	60	128	100	75	M5	3
	H7.5K	96	60	128	105	80	M5	3.5
	H11K	105	75	137	110	85	M5	4.5
	H15K	105	75	152	125	95	M5	5
	H18.5K	114	75	162	120	80	M5	5
	H22K	133	90	178	120	75	M5	6
	H30K	133	90	178	120	80	M5	6.5
	H37K	133	90	187	155	100	M5	8.5
	H45K	133	90	187	170	110	M5	10
	H55K	152	105	206	170	106	M6	11.5
	H75K	140	120	185	320	295	M6	16
	H90K	150	130	190	340	310	M6	20
	H110K	150	130	195	340	310	M6	22
	H132K	175	150	200	405	370	M8	26
	H160K	175	150	205	405	370	M8	28
	H185K	175	150	240	405	370	M8	29
	H220K	175	150	240	405	370	M8	30
	H250K	190	165	250	440	400	M8	35
	H280K	190	165	255	440	400	M8	38
	H315K	210	185	250	495	450	M10	42
	H355K	210	185	250	495	450	M10	46

(a) The size of the cables used should be equal to or larger than that of the power supply cables (R/L1, S/L2, T/L3). (Refer to **page 215**)
(b) Approximately 93% of the power factor improving effect can be obtained (94.4% when calculated with 1 power factor for the fundamental wave according to the Architectural Standard Specifications (Electrical Installation) (2010 revision) supervised by the Ministry of Land, Infrastructure, Transport and Tourism of Japan).
(c) This is a sample outline dimension drawing. The shape differs by the model.
W1 and D1 indicate distances between installation holes. The installation hole size is indicated by d.
(d) When installing a DC reactor (FR-HEL), install in the orientation shown below.
•(H)55K or lower: Horizontal installation or vertical installation
•(H)75K or higher: Horizontal installation
(e) Keep enough clearance around the reactor because it heats up.
(Keep a clearance of minimum 10cm each on top and bottom and minimum 5cm each on right and left regardless of the installation orientation.)

Name (model)	Specification and structure

Balance reactor FR-POL-H[]K

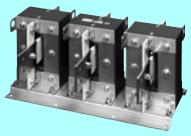

Use this option when the cable length from an inverter to the node point is less than 10 m.

• Selection method

Select a reactor according to the applied motor capacity.

Inverter		Converter unit	Balance reactor	Number of inverters connected in parallel	Capacity of the system	
Model	Multi-rating				Motor capacity (kW)	Output current (A)
FR-A842-400K-P	ND	FR-CC2-H400K-P	FR-POL-H400K	2	630	1232
				3	945	1848
	LD	FR-CC2-H450K-P	FR-POL-H500K	2	710	1386
				3	1065	2078
FR-A842-450K-P	ND	FR-CC2-H450K-P	FR-POL-H500K	2	710	1386
				3	1065	2078
	LD	FR-CC2-H500K-P	FR-POL-H500K	2	800	1539
				3	1200	2309
FR-A842-500K-P	ND	FR-CC2-H500K-P	FR-POL-H500K	2	800	1539
				3	1200	2309
	LD	FR-CC2-H560K-P	FR-POL-H500K	2	900	1750
				3	1350	2626

• Connection diagram

Connect the balance reactor between each inverter and the motor as follows.

Example of parallel connection of two inverters

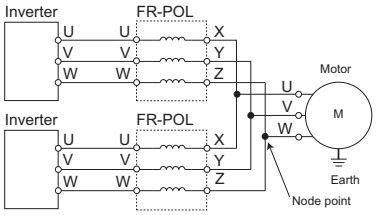

Example of parallel connection of three inverters

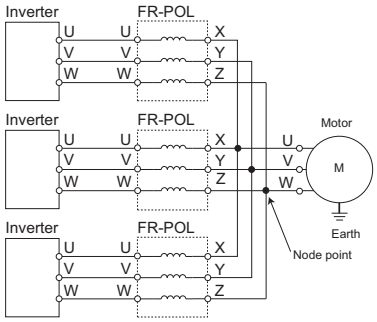

(a) Always connect one balance reactor to each inverter.

(b) FR-POL is usually earthed (grounded) by being mounted securely to the enclosure. If FR-POL is not earthed (grounded) enough through the enclosure, use an earthing (grounding) cable. When using an earthing (grounding) cable, wire the cable to the mounting hole for earthing (grounding) where varnish is removed.

• Outline dimension (Unit: mm)

FR-POL-H400K

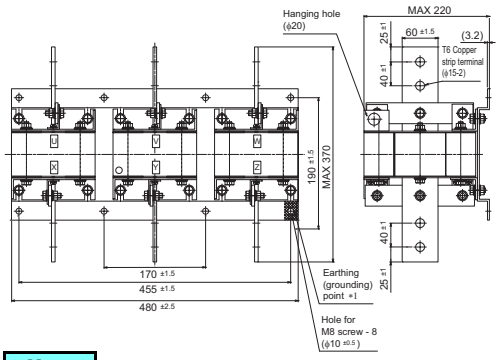

Mass (kg)
58

FR-POL-H500K

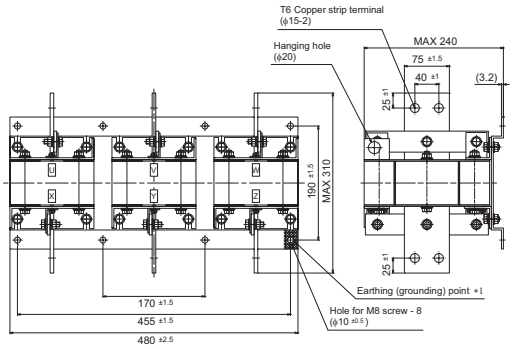

Mass (kg)
61

*1 Use this portion to wire an earthing cable.

Name (model)	Specification and structure

Line noise filter FR-BSF01 (for small capacities) / FR-BLF

Install an EMC filter (ferrite core) to reduce the electromagnetic noise generated from the inverter. Effective in the range from about 0.5 MHz to 5 MHz. range from about 0.5 MHz to 5 MHz. The FR-A820-03160(55K) or lower and FR-A840-01800(55K) or lower are equipped with built-in common mode chokes.

• Outline dimension

FR-BSF01

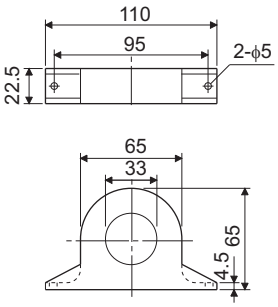

FR-BLF

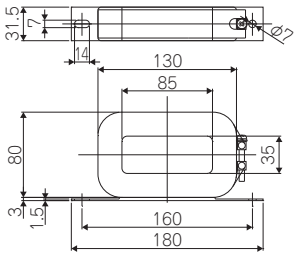

(Unit: mm)

(a) Wind each phase for three times (4T) in the same direction. (The greater the number of turns, the more effective result is obtained.)
When using several line noise filters to make 4T or more, wind the phases (cables) together. Do not use a different line noise filter for different phases.

(b) When the cables are too thick to be winded, run each cable (phase) through four or more filters installed in series in one direction.

(c) The filter can be used in the same way as the output side. When using filters at the output side, do not wind the cable more than 3 times (4T) for each filter because the filter may overheat.

(d) A thick cable of 38 mm^2 or more is not applicable to the FR-BSF01. Use FR-BLF for a larger diameter cable.

(e) Do not wind the earthing (grounding) cable.

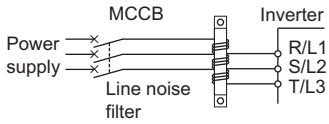

High-duty brake resistor FR-ABR-(H)[]K

Connecting the option improves the regenerative braking capability of the inverter.

• Selection method

Select the model according to the applied inverter capacity.

• Outline dimension

	Model : FR-ABR-[]	Permissible brake duty	Outline dimension (mm) W	W1	D	H	Resistance value (Ω)	Approx mass (kg)
200 V	0.4K	10%	140	500	40	21	200	0.2
	0.75K	10%	215	500	40	21	100	0.4
	2.2K*1	10%	240	500	50	26	60	0.5
	3.7K	10%	215	500	61	33	40	0.8
	5.5K	10%	335	500	61	33	25	1.3
	7.5K	10%	400	500	80	40	20	2.2
	11K	6%	400	700	100	50	13	3.5
	15K*2	6%	300	700	100	50	18 (×1/2)	2.4 (×2)
	22K*3	6%	400	700	100	50	13 (×1/2)	3.3 (×2)

	Model : FR-ABR-[]	Permissible brake duty	Outline dimension (mm) W	W1	D	H	Resistance value (Ω)	Approx mass (kg)
400 V	H0.4K	10%	115	500	40	21	1200	0.2
	H0.75K	10%	140	500	40	21	700	0.2
	H1.5K	10%	215	500	40	21	350	0.4
	H2.2K	10%	240	500	50	26	250	0.5
	H3.7K	10%	215	500	61	33	150	0.8
	H5.5K	10%	335	500	61	33	110	1.3
	H7.5K	10%	400	500	80	40	75	2.2
	H11K	6%	400	700	100	50	52	3.2
	H15K*4	6%	300	700	100	50	18 (×2)	2.4 (×2)
	H22K*5	6%	450	700	100	50	52 (×1/2)	3.3 (×2)

*1 For the 1.5K and 2.2K inverter.

*2 For the 15K brake resistor, configure so that two 18 Ω resistors are connected in parallel.

*3 For the 18.5K and 22K inverter.
For the 22K brake resistor, configure so that two 13 Ω resistors are connected in parallel.

*4 For the H15K brake resistor, configure so that two 18 Ω resistors are connected in series. FR-ABR-15K is indicated on the resistor. (same resistor as the 200 V class 15K)

*5 For the H18.5K and H22K inverter.
For the H22K brake resistor, configure so that two 52 Ω resistors are connected in parallel.

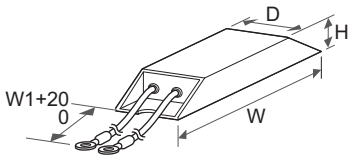

(a) When using the FR-ABR type brake resistor, remove the jumper across terminal PR-PX. Failure to remove will cause the brake resistor to overheat.

(b) The regenerative brake duty setting should be less than permissible brake duty in the table above.

(c) The temperature of the brake resistor becomes 300°C or more depending on the operation frequency, care must be taken for installation and heat dissipation.

(d) MYS type resistor can be also used. Note the permissible brake duty.

(e) Do not remove a jumper across terminal P/+ and P1 except when connecting a DC reactor.

(f) Install a thermal relay to prevent an overheat and burnout of the brake resistor.

Name (model)	Specification and structure

Brake unit
FR-BU2-(H)[]K

Discharging resistor
GZG type
GRZG type

Resistor unit
FR-BR-(H)[]K
MT-BR5-(H)[]K

Provides a braking capability greater than that is provided by an external brake resistor. This option can also be connected to the inverters without built-in brake transistors. Three types of discharging resistors are available. Make a selection according to the required braking torque.

• Specification

[Brake unit]

Model: FR-BU2-[]	200 V						400 V						
	1.5K	3.7K	7.5K	15K	30K	55K	H7.5K	H15K	H30K	H55K	H75K	H220K	H280K
Applicable motor capacity	The applicable capacity differs by the braking torque and the operation rate (%ED).												
Connected brake resistor	GRZG type, FR-BR, MT-BR5 (For the combination, refer to the table below.)											MT-BR5*1	
Multiple (parallel) driving	Max. 10 units (However, the torque is limited by the permissible current of the connected inverter.)												
Approximate mass (kg)	0.9	0.9	0.9	0.9	1.4	2.0	0.9	0.9	1.4	2.0	2.0	13	13

*1 Please contact your sales representative to use a brake resistor other than MT-BR5.

[Resistor unit]

Model: GRZG type *2	200 V				400 V		
	GZG300W-50Ω (1 unit)	GRZG200-10Ω (3 units)	GRZG300-5Ω (4 units)	GRZG400-2Ω (6 units)	GRZG200-10Ω (3 units)	GRZG300-5Ω (4 units)	GRZG400-2Ω (6 units)
Number of connectable units	1 unit	3 in series (1 set)	4 in series (1 set)	6 in series (1 set)	6 in series (2 sets)	8 in series (2 sets)	12 in series (2 sets)
Discharging resistor combined resistance (Ω)	50	30	20	12	60	40	24
Continuous operation permissible power (W)	100	300	600	1200	600	1200	2400

*2 The 1 set contains the number of units in the parentheses. For the 400 V class, 2 sets are required.

Model: FR-BR-[]	200 V			400 V			Model: MT-BR5-[]	200 V	400 V
	15K	30K	55K	H15K	H30K	H55K		55K	H75K
Discharging resistor combined resistance (Ω)	8	4	2	32	16	8	Discharging resistor combined resistance (Ω)	2	6.5
Continuous operation permissible power (W)	990	1990	3910	990	1990	3910	Continuous operation permissible power (W)	5500	7500
Approximate mass (kg)	15	30	70	15	30	70	Approximate mass (kg)	70	65

• Combination between the brake unit and the resistor unit

Brake unit model		Discharging resistor model or resistor unit model			
		GRZG type		FR-BR	MT-BR5
		Model *3	Number of connectable units		
200 V	FR-BU2-1.5K	GZG 300W-50Ω (1 unit)	1 unit	-	-
	FR-BU2-3.7K	GRZG 200-10Ω (3 units)	3 in series (1 set)	-	-
	FR-BU2-7.5K	GRZG 300-5Ω (4 units)	4 in series (1 set)	-	-
	FR-BU2-15K	GRZG 400-2Ω (6 units)	6 in series (1 set)	FR-BR-15K	-
	FR-BU2-30K	-	-	FR-BR-30K	-
	FR-BU2-55K	-	-	FR-BR-55K	MT-BR5-55K
400 V	FR-BU2-H7.5K	GRZG 200-10Ω (3 units)	6 in series (2 sets)	-	-
	FR-BU2-H15K	GRZG 300-5Ω (4 units)	8 in series (2 sets)	FR-BR-H15K	-
	FR-BU2-H30K	GRZG 400-2Ω (6 units)	12 in series (2 sets)	FR-BR-H30K	-
	FR-BU2-H55K	-	-	FR-BR-H55K	-
	FR-BU2-H75K	-	-	-	MT-BR5-H75K
	FR-BU2-H220K	-	-	-	3×MT-BR5-H75K *4
	FR-BU2-H280K	-	-	-	4×MT-BR5-H75K *4

*3 The 1 set contains the number of units in the parentheses. For the 400 V class, 2 sets are required.
*4 The number next to the model name indicates the number of connectable units in parallel.

• Selection method

[GRZG type]

- The maximum temperature rise of the discharging resistors is about 200°C. Use heat-resistant wires to perform wiring, and make sure that they will not come in contact with resistors.
- Do not touch the discharging resistor while the power is ON or for about 10 minutes after the power supply turns OFF. Otherwise you may get an electric shock.

Power supply voltage	Braking torque	Motor capacity								
		0.4	0.75	1.5	2.2	3.7	5.5	7.5	11	15
200 V	50% 30s	FR-BU2-1.5K			FR-BU2-3.7K		FR-BU2-7.5K		FR-BU2-15K	
	100% 30s	FR-BU2-1.5K		FR-BU2-3.7K	FR-BU2-7.5K		FR-BU2-15K		2×FR-BU2-15K *5	
400 V	50% 30s	-*6			FR-BU2-H7.5K				FR-BU2-H15K	
	100% 30s	-*6			FR-BU2-H7.5K		FR-BU2-H15K		FR-BU2-H30K	

Power supply voltage	Braking torque	Motor capacity					
		18.5	22	30	37	45	55
200 V	50% 30s	2×FR-BU2-15K*5			3×FR-BU2-15K*5		4×FR-BU2-15K*5
	100% 30s	3×FR-BU2-15K*5		4×FR-BU2-15K*5	5×FR-BU2-15K*5	6×FR-BU2-15K*5	7×FR-BU2-15K*5
400 V	50% 30s	FR-BU2-H30K			2×FR-BU2-H30K *5		
	100% 30s	2×FR-BU2-H30K*5			3×FR-BU2-H30K *5		4×FR-BU2-H30K*5

*5 The number next to the model name indicates the number of connectable units in parallel.
*6 FR-A840-00052(1.5K) or lower capacity inverters cannot be used with brake units. When using brake units with inverters, use the FR-A840-00083(2.2K) or higher capacity inverters.

Name (model)	Specification and structure

Brake unit
FR-BU2-(H)[]K

Discharging resistor
GZG type
GRZG type

Resistor unit
FR-BR-(H)[]K
MT-BR5-(H)[]K

[FR-BR]
The maximum temperature rise of the resistor unit is about 100°C. Therefore, use heat-resistant wires (such as glass wires).

%ED at short-time rating when braking torque is 100%

Model			Motor capacity									
			5.5kW	7.5kW	11kW	15kW	18.5kW	22kW	30kW	37kW	45kW	55kW
200 V	FR-BU2-15K	%ED	80	40	15	10	-	-	-	-	-	-
	FR-BU2-30K		-	-	65	30	25	15	10	-	-	-
	FR-BU2-55K		-	-	-	-	90	60	30	20	15	10
400 V	FR-BU2-H15K	%ED	80	40	15	10	-	-	-	-	-	-
	FR-BU2-H30K		-	-	65	30	25	15	10	-	-	-
	FR-BU2-H55K		-	-	-	-	90	60	30	20	15	10

Braking torque (%) at 10%ED in short-time rating of 15 s

Model			Motor capacity									
			5.5kW	7.5kW	11kW	15kW	18.5kW	22kW	30kW	37kW	45kW	55kW
200 V	FR-BU2-15K	Braking torque (%)	280	200	120	100	80	70	-	-	-	-
	FR-BU2-30K		-	-	260	180	160	130	100	80	70	-
	FR-BU2-55K		-	-	-	-	300	250	180	150	120	100
400 V	FR-BU2-H15K	Braking torque (%)	280	200	120	100	80	70	-	-	-	-
	FR-BU2-H30K		-	-	260	180	160	130	100	80	70	-
	FR-BU2-H55K		-	-	-	-	300	250	180	150	120	100

Regeneration duty factor (operation frequency)%ED $= \frac{tb}{tc} \times 100$ tb<15s (continuous operation time)

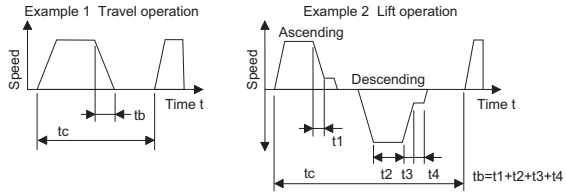

[MT-BR5]
- Be sure to select a well-ventilated place for the installation of the resistor unit. Ventilation is necessary when installing the resistor in a place such as an enclosure, where heat is not well diffused.
- The maximum temperature rise of the resistor unit is about 300°C. When wiring, be careful not to touch the resistor. Also, keep any heat-sensitive component away from the resistor (minimum 40 to 50 cm).
- The temperature of the resistor unit abnormally increases if the brake unit is operated exceeding the specified duty. Since the resistor unit may result in overheat if the temperature of the brake unit is left unchanged, switch off the inverter.
- A resistor unit is equipped with thermostat (NO contact) for overheat protection. If this protective thermostat activates in normal operation, the deceleration time may be too short. Set the inverter's deceleration time longer.

%ED at short-time rating when braking torque is 100%

Number of connectable units*7		Motor capacity															
		75 kW	90 kW	110 kW	132 kW	160 kW	185 kW	220 kW	250 kW	280 kW	315 kW	355 kW	375 kW	400 kW	450 kW	500 kW	560 kW
200 V FR-BU2-55K	1	5	-	-	-	-	-	-	-	-	-	-	-	-	-	-	-
	2	20	15	10	-	-	-	-	-	-	-	-	-	-	-	-	-
400 V FR-BU2-H75K	1	10	5	-	-	-	-	-	-	-	-	-	-	-	-	-	-
	2	40	25	20	10	5	5	-	-	-	-	-	-	-	-	-	-
400 V FR-BU2-H220K	1	80	60	40	25	15	10	10	5	-	-	-	-	-	-	-	-
	2	-	-	-	-	-	-	20	20	15	15	15	10	10	10	5	-
400 V FR-BU2-H280K	1	-	80	65	40	30	20	15	10	10	10	5	-	-	-	-	-
	2	-	-	-	-	-	-	-	-	-	20	20	15	15	15	10	10

Braking torque (%) in short-time rating of 15 s

Number of connectable units*7		Motor capacity															
		75 kW	90 kW	110 kW	132 kW	160 kW	185 kW	220 kW	250 kW	280 kW	315 kW	355 kW	375 kW	400 kW	450 kW	500 kW	560 kW
200 V FR-BU2-55K	1	70	60	50	-	-	-	-	-	-	-	-	-	-	-	-	-
	2	150	120	100	-	-	-	-	-	-	-	-	-	-	-	-	-
400 V FR-BU2-H75K	1	100	80	70	55	45	40	35	30	25	20	20	20	-	-	-	-
	2	150	150	135	110	90	80	70	60	50	45	40	40	-	-	-	-
400 V FR-BU2-H220K	1	200	200	150	150	135	115	100	80	55	-	-	-	-	-	-	-
	2	-	-	-	-	-	-	190	170	150	150	140	120	110	100	90	80
400 V FR-BU2-H280K	1	-	-	200	200	150	150	150	125	100	70	60	-	-	-	-	-
	2	-	-	-	-	-	-	-	-	-	180	160	150	150	130	115	100

*7 The number next to the model name indicates the number of connectable units in parallel.
*8 To obtain a large braking torque, the motor has to have a torque characteristic that meets the braking torque. Check the torque characteristic of the motor.

Name (model)	Specification and structure

Brake unit
FR-BU2-(H)[]K

Discharging resistor
GZG type
GRZG type

Resistor unit
FR-BR-(H)[]K
MT-BR5-(H)[]K

• Connection diagram

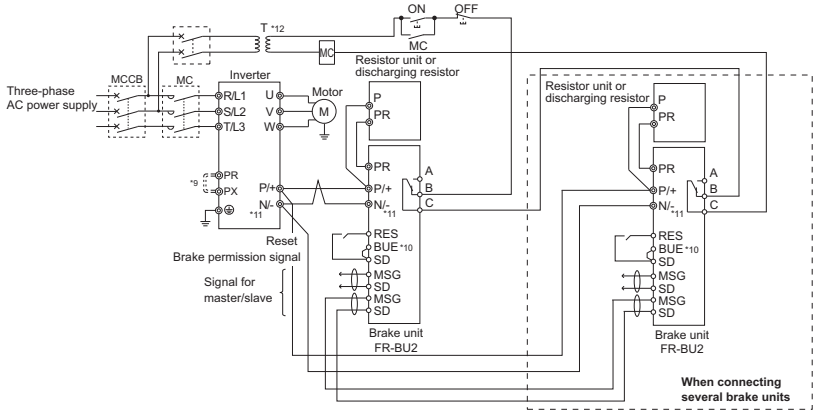

∗9 When using the FR-BU2 with the FR-A820-00490(7.5K) or lower and the FR-A840-00250(7.5K) or lower inverters, be sure to remove the jumper across terminals PR and PX.

∗10 A jumper is connected across BUE and SD in the initial status.

∗11 When wiring, make sure to match the terminal symbol (P/+, N/-) at the inverter side and at the brake unit (FR-BU2) side. Incorrect connection will damage the inverter. (For the FR-A820-00770(15K) to 02150(22K), and the FR-A840-00470(18.5K) to 01800(55K), use terminals P3 and N/-.)
Do not remove the jumper across terminal P/+ and P1 except for connecting the DC reactor.

∗12 When the power supply is 400 V class, install a step-down transformer.

• Outline dimensions

<FR-BU2>

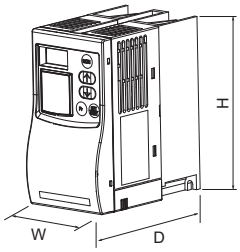

FR-BU2-1.5K to 55K
FR-BU2-H7.5K to H75K

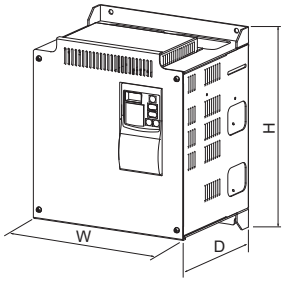

FR-BU2-H220K, H280K

Model	W	H	D
FR-BU2-1.5K to 15K	68	128	132.5
FR-BU2-30K	108	128	129.5
FR-BU2-55K	170	128	142.5
FR-BU2-H7.5K, H15K	68	128	132.5
FR-BU2-H30K	108	128	129.5
FR-BU2-H55K, H75K	170	128	142.5
FR-BU2-H220K, H280K	250	300	200

(Unit: mm)

<GZG, GRZG>

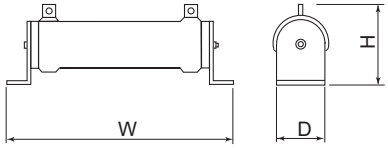

Model	W	H	D
GZG300W	335	78	40
GRZG200	306	55	26
GRZG300	334	79	40
GRZG400	411	79	40

(Unit: mm)

<FR-BR>

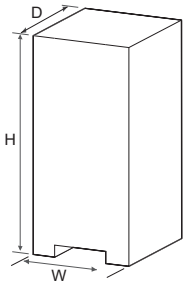

Model	W	H	D
FR-BR-15K	170	450	220
FR-BR-30K	340	600	220
FR-BR-55K	480	700	450
FR-BR-H15K	170	450	220
FR-BR-H30K	340	600	220
FR-BR-H55K	480	700	450

(Unit: mm)

<MT-BR5>

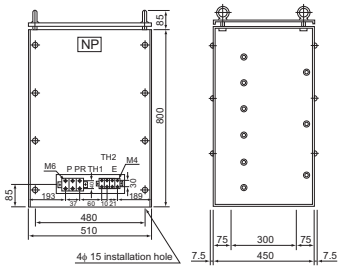

Name (model)	Specification and structure

Multifunction regeneration converter FR-XC

Dedicated stand-alone reactor FR-XCL

Dedicated box-type reactor FR-XCB

One inverter can handle harmonic suppression and power regeneration.
Functions that match the application can be selected by combining the inverter/converter with the dedicated reactor FR-XCB (boxtype) or FR-XCL.

• Combination

<<Combination matrix of FR-XCL and FR-XC(-PWM)>>

Dedicated standalone reactor	Multifunction regeneration converter	
FR-XCL-[ ]	FR-XC-[ ]	FR-XC-[ ]-PWM *1
7.5K	7.5K	-
11K	11K	-
15K	15K	-
22K	22K	18.5K
30K	30K	22K
37K	37K	37K
55K	55K	55K
H7.5K	H7.5K	-
H11K	H11K	-
H15K	H15K	-
H22K	H22K	H18.5K
H30K	H30K	H22K
H37K	H37K	H37K
H55K	H55K	H55K

<<Combination matrix of FR-XCB and FR-XC(-PWM)>>

Dedicated box-type reactor	Multifunction regeneration converter	
FR-XCB-[ ]	FR-XC-[ ] *2	FR-XC-[ ]-PWM
18.5K	22K	18.5K
22K	30K	22K
37K	37K	37K
55K	55K	55K
H18.5K	H22K	H18.5K
H22K	H30K	H22K
H37K	H37K	H37K
H55K	H55K	H55K

<<Combination matrix of FR-XCCP and FR-XC(-PWM)>>

Converter installation attachment for enclosure	Multifunction regeneration converter
FR-XCCP[ ]	FR-XC-[ ]
01	(H) 7.5K
	(H) 11K
02	(H) 15K
03	(H) 22K
	(H) 30K
	(H) 18.5K-PWM
	(H) 22K-PWM

<<Combination matrix of FR-XCCU and FR-XC(-PWM)>>

IP20 compatible attachment	Multifunction regeneration converter
FR-XCCU[ ]	FR-XC-[ ] (-PWM)
01	37K
	H55K
02	55K
03	H37K

*1 The harmonic suppression function is preenabled in this model. To use the converter with the FR-XCL, change the "9999" setting of **Pr.416 Control method selection** to "0" (harmonic suppression disabled).

*2 The harmonic suppression function is not preenabled in this model. To use the converter with the FR-XCB, change the "9999" setting of **Pr.416 Control method selection** to "1" (harmonic suppression enabled).

• Specifications

<<200V class>>

Model*1			FR-XC-[ ]K							FR-XC-[ ]K-PWM			
		Harmonic suppression	7.5	11	15	22	30	37	55	18.5	22	37	55
Common bus regeneration mode	Applicable inverter capacity (kW)	Disabled	7.5	11	15	22	30	37	55	22	30	37	55
		Enabled	-	-	-	18.5	22	37	55	18.5	22	37	55
	Overload current rating		100% continuous /150% 60 s							100% continuous /150% 60 s			
Power regeneration mode*2	Potential regenerative capacity (kW)		5.5	7.5	11	18.5	22	30	45	18.5	22	30	45
	Overload current rating		100% continuous /150% 60 s							100% continuous /150% 60 s			
Power source	Rated input AC voltage/ frequency	Disabled	Three-phase 200 to 240 V 50 Hz/60 Hz							Three-phase 200 to 240 V 50 Hz/60 Hz			
		Enabled	-	-	-	Three-phase 200 to 230 V 50 Hz/60 Hz*3				Three-phase 200 to 230 V 50 Hz/60 Hz*4			
	Permissible AC voltage fluctuation	Disabled	Three-phase 70 to 264 V 50 Hz/60 Hz							Three-phase 170 to 264 V 50 Hz/60 Hz			
		Enabled	-	-	-	Three-phase 170 to 253 V 50 Hz/60 Hz				Three-phase 170 to 253 V 50 Hz/60 Hz			
	Permissible frequency fluctuation	Disabled	±5%							±5%			
		Enabled	-	-	-	±5%				±5%			
Input power factor		Enabled	-	-	-	0.99 or more (when load ratio is 100%)				0.99 or more (when load ratio is 100%)			
Approx. mass (kg)*5			5	5	6	10.5	10.5	28	38	10.5	10.5	28	38

Name (model)	Specification and structure

Multifunction regeneration converter FR-XC

Dedicated stand-alone reactor FR-XCL

Dedicated box-type reactor FR-XCB

<<400V class>>

Model*1		Harmonic suppression	FR-XC-H[ ]K 7.5	11	15	22	30	37	55	FR-XC-H[ ]K-PWM 18.5	22	37	55
Common bus regeneration mode	Applicable inverter capacity (kW)	Disabled	7.5	11	15	22	30	37	55	22	30	37	55
		Enabled	-	-	-	18.5	22	37	55	18.5	22	37	55
	Overload current rating		100% continuous /150% 60 s							100% continuous /150% 60 s			
Power regeneration mode*2	Potential regenerative capacity (kW)		5.5	7.5	11	18.5	22	30	45	18.5	22	30	45
	Overload current rating		100% continuous /150% 60 s							100% continuous /150% 60s			
Power source	Rated input AC voltage/ frequency	Disabled	Three-phase 380 to 500 V 50 Hz/60 Hz							Three-phase 380 to 500 V 50 Hz/60 Hz			
		Enabled	-	-	-	Three-phase 380 to 480 V 50 Hz/60 Hz*3				Three-phase 380 to 480 V 50 Hz/60 Hz*4			
	Permissible AC voltage fluctuation	Disabled	Three-phase 323 to 550 V 50 Hz/60 Hz							Three-phase 323 to 550 V 50 Hz/60 Hz			
		Enabled	-	-	-	Three-phase 323 to 506 V 50 Hz/60 Hz				Three-phase 323 to 506 V 50 Hz/60 Hz			
	Permissible frequency fluctuation	Disabled	±5%							±5%			
		Enabled	-	-	-	±5%				±5%			
Input power factor		Enabled	-	-	-	0.99 or more (when load ratio is 100%)				0.99 or more (when load ratio is 100%)			
Approx. mass (kg)*5			5	5	6	10.5	10.5	28	28	10.5	10.5	28	28

*1 The harmonic suppression function is not pre-enabled in this model.
*2 The power regeneration mode is selectable when the harmonic suppression function is disabled.
*3 The DC bus voltage is approx. 297 VDC at an input voltage of 200 VAC, approx. 327 VDC at 220 VAC, and approx. 342 VDC at 230 VAC.
*4 The DC bus voltage is approx. 594 VDC at an input voltage of 400 VAC, approx. 653 VDC at 440 VAC, and approx. 713 VDC at 480 VAC.
*5 Mass of the FR-XC alone.

• Connection diagram
<<Common bus regeneration mode with harmonic suppression enabled>>

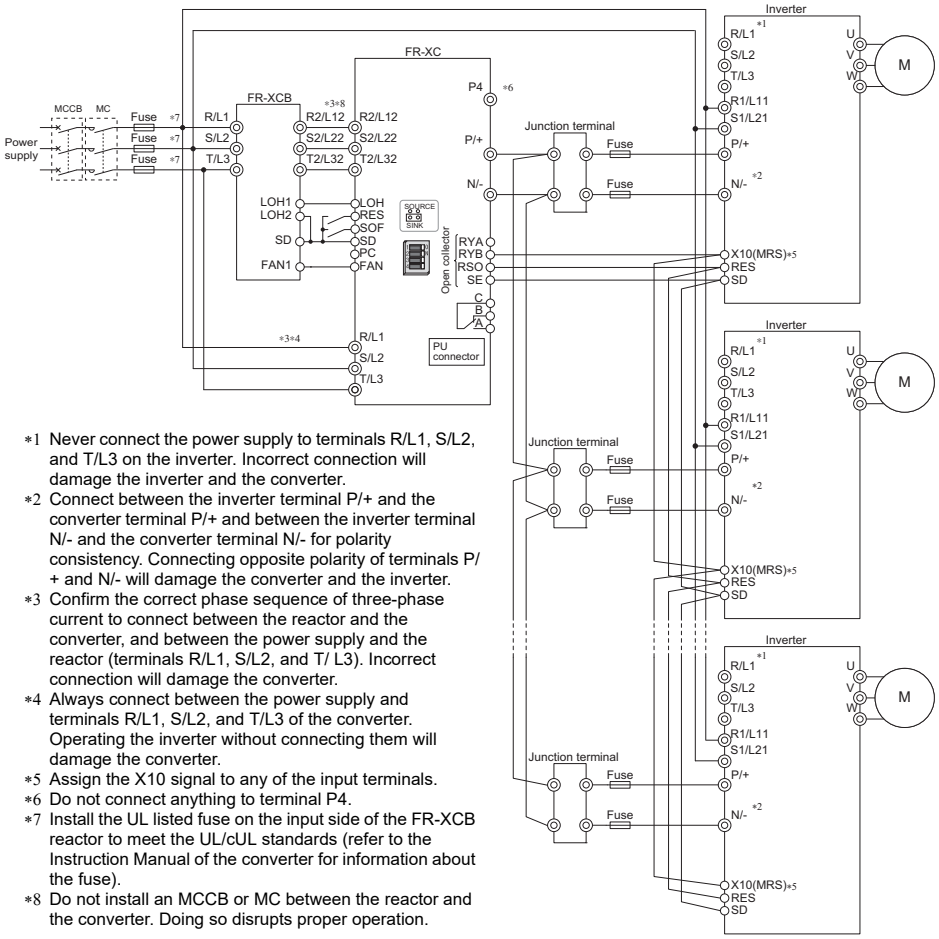

*1 Never connect the power supply to terminals R/L1, S/L2, and T/L3 on the inverter. Incorrect connection will damage the inverter and the converter.
*2 Connect between the inverter terminal P/+ and the converter terminal P/+ and between the inverter terminal N/- and the converter terminal N/- for polarity consistency. Connecting opposite polarity of terminals P/+ and N/- will damage the converter and the inverter.
*3 Confirm the correct phase sequence of three-phase current to connect between the reactor and the converter, and between the power supply and the reactor (terminals R/L1, S/L2, and T/ L3). Incorrect connection will damage the converter.
*4 Always connect between the power supply and terminals R/L1, S/L2, and T/L3 of the converter. Operating the inverter without connecting them will damage the converter.
*5 Assign the X10 signal to any of the input terminals.
*6 Do not connect anything to terminal P4.
*7 Install the UL listed fuse on the input side of the FR-XCB reactor to meet the UL/cUL standards (refer to the Instruction Manual of the converter for information about the fuse).
*8 Do not install an MCCB or MC between the reactor and the converter. Doing so disrupts proper operation.

Name (model)	Specification and structure

Multifunction regeneration converter FR-XC

Dedicated stand-alone reactor FR-XCL

Dedicated box-type reactor FR-XCB

<<Power regeneration mode>>

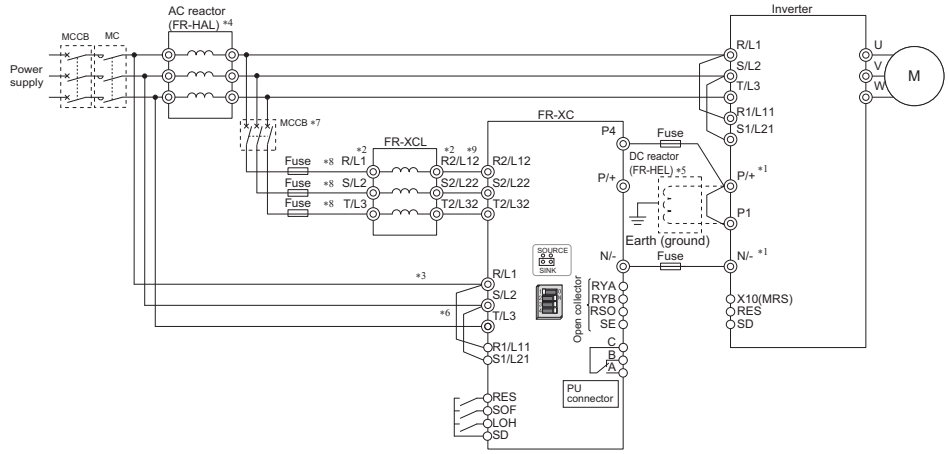

*1 Connect between the inverter terminal P/+ and the converter terminal P4 and between the inverter terminal N/- and the converter terminal N/- for polarity consistency. Connecting the opposite polarity of terminals P/+ and N/- will damage the converter and the inverter.
*2 Confirm the correct phase sequence of three-phase current to connect between the reactor and the converter, and between the power supply and the reactor. Incorrect connection will damage the converter.
*3 Always connect between the power supply and terminals R/L1, S/L2, and T/L3 of the converter. Operating the inverter without connecting them will damage the converter. A branch point to each of these terminals must be placed between the power supply and the FR-HAL reactor.
*4 Install the FR-HAL reactor between the node points joined to the converter terminals R/L1, S/L2, and T/L3 and the node points joined to the FR-XCL reactor. For further information, refer to the Instruction Manual.
*5 To connect a DC reactor, remove a jumper installed across terminals P1 and P/+ before installing the DC reactor.
*6 To use separate power supply for the control circuit, remove each jumper at terminal R1/L11 and terminal S1/L21.
*7 Refer to the Instruction Manual to select an MCCB.
*8 Install the UL listed fuse on the input side of the FR-XCL reactor to meet the UL/cUL standards (refer to the Instruction Manual of the converter for information about the fuse).
*9 Do not install an MCCB or MC between the reactor and the converter. Doing so disrupts proper operation.

• Outline dimension drawings
This is an example of the outer appearance, which differs depending on the model.

<<Multifunction regeneration converter FR-XC (-PWM)>>

•FR-XC-(H)7.5K, (H)11K, (H)15K

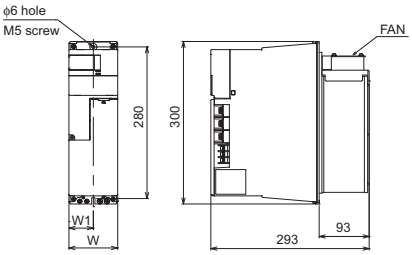

(Unit: mm)

Model	W	W1
FR-XC-(H)7.5K, (H)11K	90	45
FR-XC-(H)15K	120	60

•FR-XC-(H)22K, (H)30K
•FR-XC-(H)18.5K-PWM, (H)22K-PWM

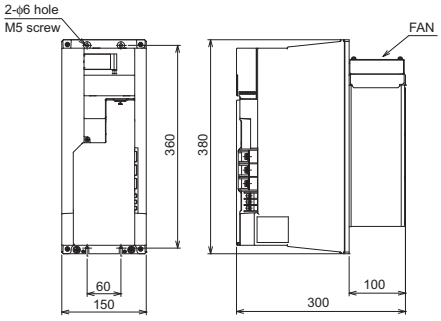

(Unit: mm)

•FR-XC-(H)37K, (H)55K
•FR-XC-(H)37K-PWM, (H)55K-PWM

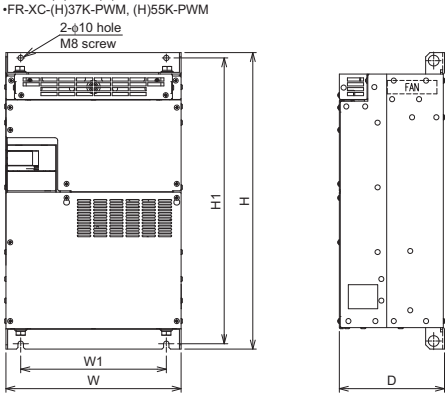

(Unit: mm)

Model	W	W1	H	H1	D
FR-XC-(H)37K, H55K FR-XC-(H)37K-PWM, H55K-PWM	325	270	550	530	195
FR-XC-55K FR-XC-55K-PWM	370	300	620	600	250

Name (model)	Specification and structure
Multifunction regeneration converter FR-XC **Dedicated stand-alone reactor FR-XCL** **Dedicated box-type reactor FR-XCB**	

<<Dedicated stand-alone reactor FR-XCL>>

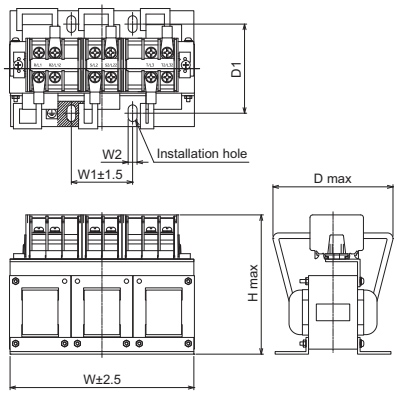

200 V class (Unit: mm)

Model	W	W1	W2	H	D	D1	Mounting screw size	Terminal screw size	Mass
FR-XCL-7.5K	165	55	8	125	120	80±2	M6	M5	3.9kg
FR-XCL-11K						73±2			3.6kg
FR-XCL-15K	192			130	130	100±2		M6	5.5kg
FR-XCL-22K					140	110±2			6.3kg
FR-XCL-30K	240	70		150	160	119±2			10.0kg
FR-XCL-37K	248	200	10	190	240	120±5	M8	M10	12.0kg
FR-XCL-55K	250	225			260	135±5			15.5kg

400 V class (Unit: mm)

Model	W	W1	W2	H	D	D1	Mounting screw size	Terminal screw size	Mass
FR-XCL-H7.5K	165	55	8	125	120	73±2	M6	M5	3.7kg
FR-XCL-H11K						80±2			4.2kg
FR-XCL-H15K					135	110±2			6.0kg
FR-XCL-H22K	240	70		150	150	109±2		M6	9.0kg
FR-XCL-H30K					170	129±2			12.0kg
FR-XCL-H37K	220	200	10	190	230	120±5	M8	M8	12.0kg
FR-XCL-H55K	250	225				135±5			16.0kg

<<Dedicated box-type reactor FR-XCB>>

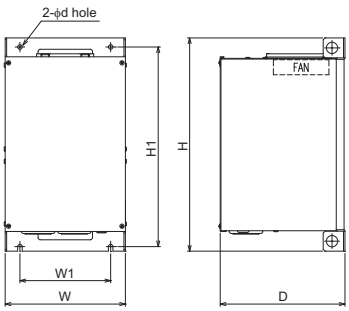

200 V class (Unit: mm)

Model	W	W1	H	H1	D	d	Screw size	Mass
FR-XCB-18.5K	265	200	470	440	275	10	M8	26.0kg
FR-XCB-22K								
FR-XCB-37K	350	270	600	575	330	12	M10	56.9kg
FR-XCB-55K								68.5kg

400 V class (Unit: mm)

Model	W	W1	H	H1	D	d	Screw size	Mass
FR-XCB-H18.5K	265	200	470	440	275	10	M8	26.9kg
FR-XCB-H22K								
FR-XCB-H37K	350	270	600	575	330	12	M10	63.0kg
FR-XCB-H55K								73.0kg

<<Converter installation enclosure attachment FR-XCCP>>

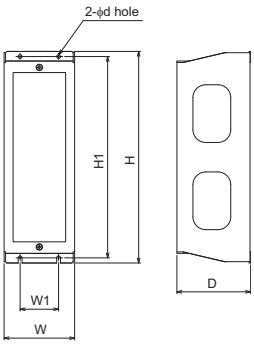

(Unit: mm)

Model	W	W1	H	H1	D	d	Screw size
FR-XCCP01	110	60	330	314	115	6	M5
FR-XCCP02	130	90			120		
FR-XCCP03	160	120	410	396	116	7	M6

Name (model)	Specification and structure
Power regeneration common converter FR-CV-(H)[]K 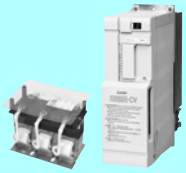	Enables continuous regenerative operation at 100% torque. This option can support continuous regenerative operations including line operation. This converter eliminates the need of preparing brake units per inverter. This converter can cut down the total space and the cost. The regenerated energy is used by another inverter, and if there is still an excess, it is returned to the power supply, saving on the energy consumption. • Selection method Select the model according to capacity of the inverter or the applicable motor, whichever larger. • Connection diagram

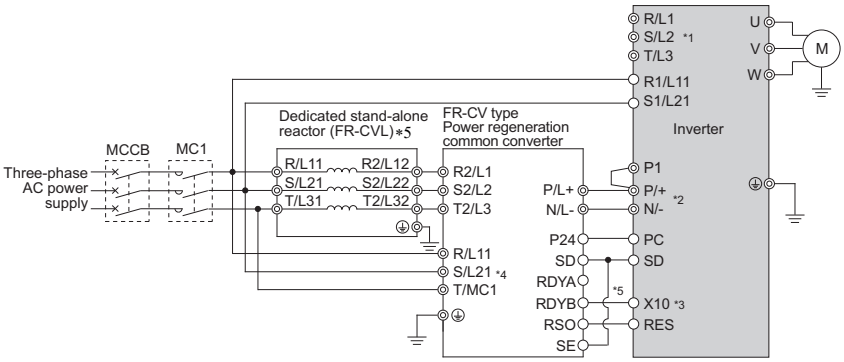

*1 Remove the jumpers across R/L1 and R/L11 and across S/L2 and S1/L21, and connect the power supply for the control circuit to terminals R1/L11 and S1/L21. Do not connect anything to the power supply input terminals R/L1, S/L2, and T/L3. Incorrect connection will damage the inverter. Connecting the opposite polarity of terminals N/- and P/+ will damage the inverter.

*2 Do not install an MCCB for terminals P/+ and N/- (between terminals P/L+ and P/+ or between N/L- and N/-). Always match the terminal symbols (P/+, N/-) at the inverter side and at the power regeneration common converter side. Incorrect connection will damage the inverter.

*3 Assign the X10 signal to a terminal using any of **Pr.178 to Pr.189 (input terminal function selection)**.

*4 Be sure to connect the power supply and terminals R/L11, S/L21, and T/MC1. Operating the inverter without connecting them will damage the power regeneration common converter.

*5 Install the dedicated stand-alone reactor (FR-CVL) on a horizontal surface.

*6 Always connect terminal RDYB of the FR-CV to the inverter terminal where the X10 signal or the MRS signal is assigned to. Always connect terminal SE of the FR-CV to the inverter terminal SD. Not connecting these terminals may damage the FR-CV.

• Outline dimensions

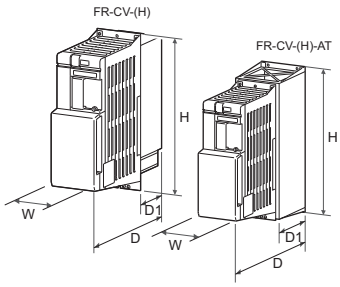

FR-CV-(H)

Voltage/ capacity		W	D	D1	H	Voltage/ capacity		W	D	D1	H
200 V	7.5K/11K	90	303	103	300	400 V	7.5K/ 11K/15K	120	305	105	300
	15K	120	305	105	300		22K/30K	150	305	105	380
	22K/30K	150	322	122	380		37K/55K	400	250	135	620
	37K/55K	400	250	135	620						

(Unit: mm)

FR-CV-(H)-AT

Voltage/ capacity		W	D	D1	H	Voltage/ capacity		W	D	D1	H
200 V	7.5K/11K	110	315	115	330	400 V	7.5K/ 11K/15K	130	320	120	330
	15K	130	320	120	330		22K/30K	160	350	150	410
	22K/30K	160	350	150	410						

(Unit: mm)

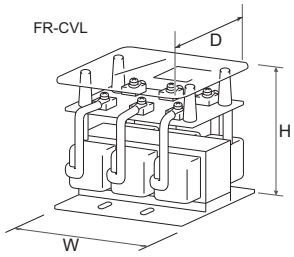

FR-CVL

Voltage/ capacity		W	H	D	Voltage/ capacity		W	H	D
200 V	7.5K/ 11K/15K	165	155	130	400 V	7.5K/11K	220	200	135
						15K	220	205	135
	22K	165	155	140		22K	220	215	150
	30K	215	175	160		30K	245	220	185
	37K	220	200	320		37K	245	265	230
	55K	250	225	335		55K	290	280	230

(Unit: mm)

Name (model)	Specification and structure
Power regeneration converter MT-RC-H[]K	A power regeneration converter allows energy generated at braking operation of the inverter to be regenerated to the power supply. Since a converter does not require a discharging resistor necessary like a brake unit, it is effective in space and energy saving and it provides a large peak braking torque. • Selection method Select the model according to the applied motor capacity. • Connection diagram

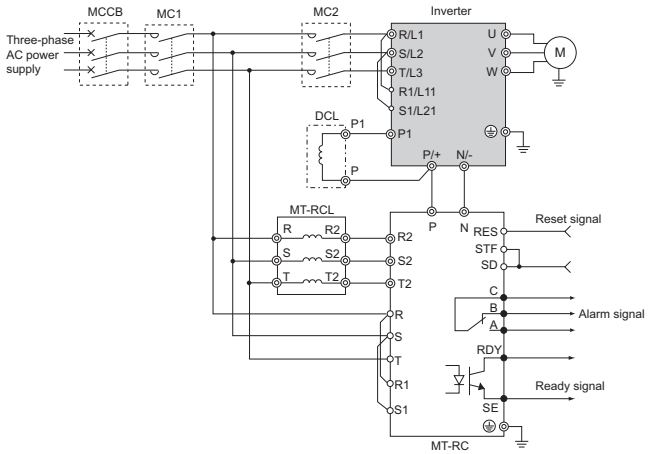

• Outline dimension (Unit: mm)

MT-RC-H75K

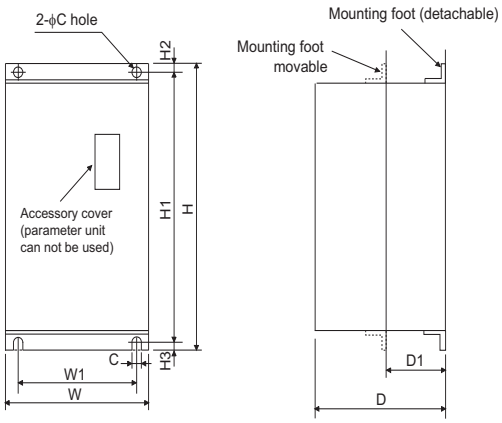

MT-RC-H160K to H280K

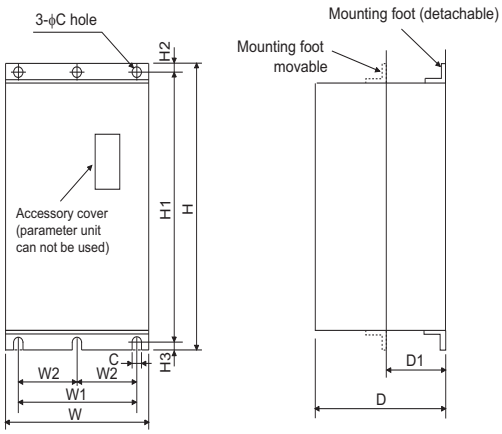

	Model	W	W1	W2	H	H1	H2	H3	D	D1	C
400 V	MT-RC-H75K	480	400	-	740	714	13	13	360	196	10
	MT-RC-H160K	498	400	200	1010	984	13	13	380	196	10
	MT-RC-H220K	680	600	300	1010	984	13	13	380	196	10
	MT-RC-H280K	790	630	315	1330	1300	15	15	440	196	12

MT-RCL

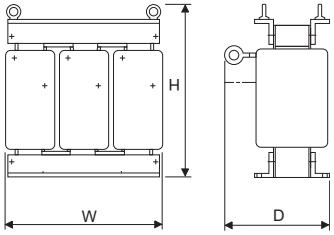

	Model	W	H	D
400 V	MT-RCL-H75K	390	385	358
	MT-RCL-H160K	515	465	380
	MT-RCL-H220K	630	655	565
	MT-RCL-H280K	690	690	620

Name (model)	Specification and structure

High power factor converter FR-HC2- (H)[]K

Substantially suppresses power harmonics to obtain the equivalent capacity conversion coefficient K5 = 0 specified in "the Harmonic Suppression Guidelines for Consumers Who Receive High Voltage or Special High Voltage" in Japan.
The power regeneration function comes standard.
The common converter driving with several inverters is possible.

• Selection method
Select the model according to capacity of the inverter or the applicable motor, whichever larger.

• Specifications

Model: FR-HC2-[] *2	200 V					400 V										
	7.5K	15K	30K	55K	75K	H7.5K	H15K	H30K	H55K	H75K	H110K	H160K	H220K	H280K	H400K	H560K
Applicable inverter capacity (ND rating)*1	3.7K to 7.5K	7.5K to 15K	15K to 30K	30K to 55K	37K to 75K	3.7K to 7.5K	7.5K to 15K	15K to 30K	30K to 55K	37K to 75K	55K to 110K	90K to 160K	110K to 220K	160K to 280K	200K to 400K	280K to 560K
Rated input voltage/ frequency	Three-phase 200 V to 220 V 50 Hz 200 V to 230 V 60 Hz					Three-phase 380 V to 460 V 50/60 Hz										
Rated input current (A)	33	61	115	215	278	17	31	57	110	139	203	290	397	506	716	993

*1 The total capacity of the connected inverters.
*2 If a high power factor converter (FR-HC2) is purchased, it comes with reactor 1 (FR-HCL21), reactor 2 (FR-HCL22), and an outside box (FR-HCB2). Do not connect the DC reactor to the inverter when using a high power factor converter.
(If an H280K or higher is purchased, it comes with FR-HCL21, FR-HCL22, FR-HCC2, FR-HCR2, and FR-HCM2.)

• Outline dimension (Unit: mm)

Voltage	Capacity	High power factor converter FR-HC2			Reactor 1 FR-HCL21*3			Reactor 2 FR-HCL22*3			Outside box FR-HCB2*4		
		W	H	D	W	H	D	W	H	D	W	H	D
200 V	7.5K	220	260	170	132	150	100	237.5	230	140	190	320	165
	15K	250	400	190	162	172	126	257.5	260	165			
	30K	325	550	195	195	210	150	342.5	305	180	270	450	203
	55K	370	620	250	210	180	200.5	432.5	380	280			
	75K	465	620	300	240	215	215.5	474	460	280	400	450	250
400 V	H7.5K	220	300	190	132	140	100	237.5	220	140	190	320	165
	H15K	220	300	190	162	170	126	257.5	260	165			
	H30K	325	550	195	182	195	101	342.5	300	180			
	H55K	370	670	250	282.5	245	165	392.5	365	200	270	450	203
	H75K	325	620	250	210	175	210.5	430	395	280	300	350	250
	H110K	465	620	300	240	230	220	500	440	370	350	450	380
	H160K	498	1010	380	280	295	274.5	560	520	430	400	450	440
	H220K	498	1010	380	330	335	289.5	620	620	480			
	H280K	680	1010	380	330	335	321	690	700	560	-	-	-
	H400K	790	1330	440	402	460	550	632	675	705	-	-	-
	H560K	790	1330	440	452	545	645	632	720	745	-	-	-

High power factor converter

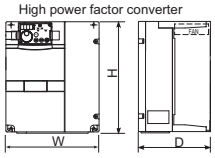

Reactor 1, Reactor 2

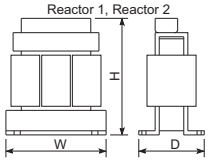

Outside box

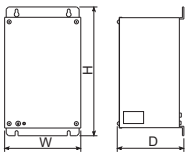

*3 Install reactors (FR-HCL21 and 22) on a horizontal surface.
*4 The H280K or higher are not equipped with FR-HCB2. A filter capacitor and inrush current limit resistors are provided instead.

Name (model)	Specification and structure
Surge voltage suppression filter FR-ASF-H[]K	A surge voltage suppression filter limits surge voltage applied to motor terminals when driving the 400 V class motor by the inverter.

• Selection method

Select the model according to the applied motor capacity.

• Specifications

Model: FR-ASF-[]		400 V						
		H1.5K	H3.7K	H7.5K	H15K	H22K	H37K	H55K
Applicable motor capacity (kW)		0.4 to 1.5	2.2 to 3.7	5.5 to 7.5	11 to 15	18.5 to 22	30 to 37	45 to 55
Rated input current (A)		4.0	9.0	17.0	31.0	43.0	71.0	110.0
Overload current rating *1		150% 60 s, 200% 0.5 s						
Rated input AC voltage *1		Three-phase 380 V to 460 V 50 Hz/60 Hz						
Maximum AC voltage fluctuation *1		Three-phase 506 V 50 Hz/60 Hz						
Maximum frequency *1		400 Hz						
PWM frequency permissible range		0.5 kHz to 14.5 kHz						
Maximum wiring length between the filter-motor		300 m						
Approx. mass (kg)		8.0	11.0	20.0	28.0	38.0	59.0	78.0
Environment	Surrounding air temperature	-10°C to +50°C (non-freezing)						
	Surrounding air humidity	90% RH or less (non-condensing)						
	Atmosphere	Indoors (without corrosive gas, flammable gas, oil mist, dust and dirt, etc.)						
	Altitude/vibration	Maximum 1000 m, 5.9 m/s^2 or less at 10 to 55 Hz (directions of X, Y, Z axes)						

*1 Determined by the specification of the connected inverter (400 V class).

• Connection diagram

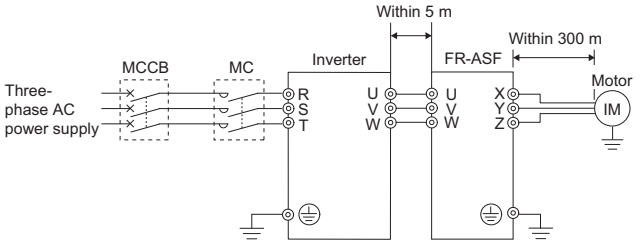

• Outline dimension (Unit: mm)

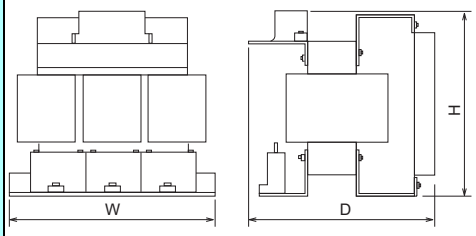

Model	W*1	H*1	D*1
FR-ASF-H1.5K	221	193	160
FR-ASF-H3.7K	221	200	180
FR-ASF-H7.5K	281	250	215
FR-ASF-H15K *2	336	265	290
FR-ASF-H22K *2	336	345	354
FR-ASF-H37K *2	376	464	429
FR-ASF-H55K *2	396	464	594

*1 This indicates the maximum dimension.
*2 The H15K or higher has a different shape.

Name (model)	Specification and structure
Surge voltage suppression filter FR-BMF-H[]K	Limits surge voltage applied to motor terminals when driving a 400 V class motor with an inverter. This filter is compatible with the 5.5 to 37 kW motors. • Selection method Select the model according to the applied motor capacity. • Specifications

Model: FR-BMF-H[]K		7.5		15		22		37	
Applicable motor capacity (kW) *1		5.5	7.5	11	15	18.5	22	30	37
Rated current (A)		17		31		43		71	
Overload current rating*2		150% 60 s, 200% 0.5 s (inverse-time characteristics)							
Rated AC input voltage*2		Three-phase 380 to 480 V							
Permissible AC voltage fluctuation*2		323 to 528 V							
Maximum frequency*2		120 Hz							
PWM carrier frequency		2 kHz or lower*3							
Protective structure (JEM 1030)		Open type (IP00)							
Cooling system		Self-cooling							
Maximum wiring length		100m or lower							
Approx. mass (kg)		5.5		9.5		11.5		19	
Environment	Surrounding air temperature	-10°C to +50°C (non-freezing)							
	Surrounding air humidity	90% RH or less (non-condensing)							
	Atmosphere	Indoors (without corrosive gas, flammable gas, oil mist, dust and dirt, etc.)							
	Altitude/vibration	Maximum 1000 m, 5.9 m/s^2 or less*4 at 10 to 55 Hz (directions of X, Y, Z axes)							

*1 Indicates the maximum capacity applicable with the Mitsubishi Electric 4-pole standard motor. (PM motors are not applicable.)
*2 Determined by the specification of the connected inverter (400 V class).
*3 Set the **Pr.72 PWM frequency selection** to 2 kHz or less.
*4 When an inverter has a filter mounted on its back, do not use such an inverter on a moving object or in a place that vibrates (exceeding 1.96 m/s^2).

• Connection diagram

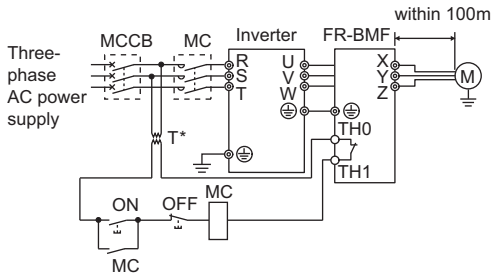

* Install a step-down transformer.

• Outline dimension

FR-BMF-H7.5K

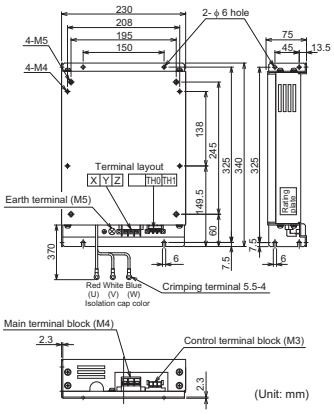

FR-BMF-H15K, H22K

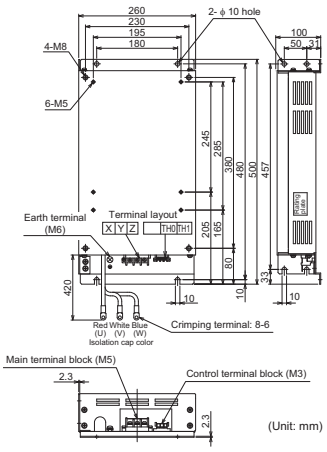

FR-BMF-H37K

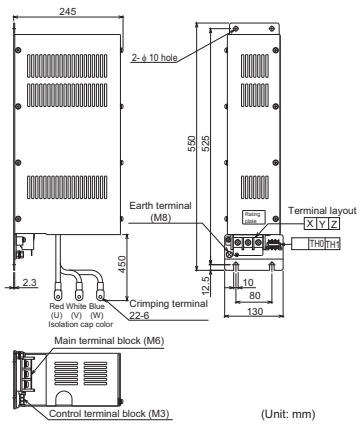

Name (model)	Specification and structure
Sine wave filter **MT-BSL-(H)[]K** **MT-BSC-(H)[]K**	

• Sine wave filter application

A sine wave filter can be installed to adjust the motor voltage and current waveforms to be sine waves. Install a sine wave filter to the output side of the inverter . This filter is compatible with the FR-A820-03800(75K) or higher and the FR-A840-02160(75K) or higher.

(This product is available only with general-purpose motors.) A sine wave filter will bring operation characteristic equivalent to the operation with a sine wave power supply and also will provide the following benefits. A sine wave filter will bring operation characteristic equivalent to the operation with a sine wave power supply and also will provide the following benefits.

(a) Low noise
(b) No surge current
(c) Small motor losses (for a standard motor)

• Operating condition

The following settings and conditions are required to use a sine wave filter.

(a) Set "25" in **Pr.72**. (The initial value is "2".)
This setting changes the carrier frequency to 2.5 kHz. (A sine wave filter is designed on the assumption of 2.5 kHz carrier frequency. Always change this setting.) The operation with **Pr.72** = "25" setting may damage inverter and the sine wave filter.
(b) A sine wave filter can be used for the operation with an inverter output frequency of 60 Hz or lower.
It cannot be used for the operation with higher frequency. (Using it with the higher frequency will increases the filter loss.)
(c) It is applicable only under V/F control. (When **Pr.72** = "25", V/F control is automatically set.)
(d) When using the sine wave filter and the FR-HC2 together, use the MT-BSL-HC.

• Circuit configuration and connection

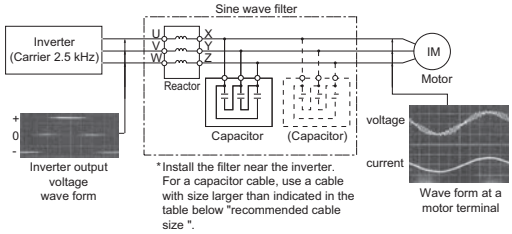

Motor capacity (kW) *1		Model: Reactor for filter	Rated current (A)	Capacitor for filter*2	Applicable inverter
200 V	75	MT-BSL-75K	288	1×MT-BSC-75K	Select an inverter where the rated motor current × 1.1 will be 90% or less of the inverter rated current.
	90	MT-BSL-90K	346	1×MT-BSC-90K	
400 V	75	MT-BSL-H75K(-HC)	144	1×MT-BSC-H75K	
	90	MT-BSL-H110K(-HC)	216	1×MT-BSC-H110K	
	110	MT-BSL-H110K(-HC)	216	1×MT-BSC-H110K	
	132	MT-BSL-H150K(-HC)	288	2×MT-BSC-H75K	
	160	MT-BSL-H220K(-HC)	432	2×MT-BSC-H110K	
	185	MT-BSL-H220K(-HC)	432	2×MT-BSC-H110K	
	220	MT-BSL-H220K(-HC)	432	2×MT-BSC-H110K	
	250	MT-BSL-H280K(-HC)	576	3×MT-BSC-H110K	
	280	MT-BSL-H280K(-HC)	576	3×MT-BSC-H110K	

*1 Assumes the use of a Mitsubishi Electric 4-pole standard motor.
*2 When using two or three capacitors, install them in parallel as shown in the wiring diagram.

• Reactor for sine wave filter

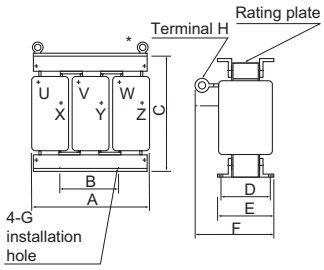

* Remove the eye nut after installation of the product.
This is a sample of the outer appearance, which differs depending on the model.

	Model	A	B	C	D	E	F	G	H	Mass (kg)
200 V	MT-BSL-75K	330	150	285	185	216	328	M10	M12	80
	MT-BSL-90K	390	150	320	180	220	330	M12	M12	120
400 V	MT-BSL-H75K	330	150	285	185	216	318	M10	M10	80
	MT-BSL-H75K-HC	385	150	345	185	216	315	M10	M10	110
	MT-BSL-H110K	390	150	340	195	235	368	M12	M12	140
	MT-BSL-H110K-HC	420	170	400	195	235	370	M12	M12	180
	MT-BSL-H150K	455	200	397	200	240	380	M12	M12	190
	MT-BSL-H150K-HC	450	300	455	390	430	500	M12	M12	250
	MT-BSL-H220K	495	200	405	250	300	420	M12	M12	240
	MT-BSL-H220K-HC	510	350	540	430	485	555	M12	M12	310
	MT-BSL-H280K	575	200	470	310	370	485	M12	M12	340
	MT-BSL-H280K-HC	570	400	590	475	535	620	M12	M12	480

Install the reactor on a horizontal surface.

• Capacitor for sine wave filter

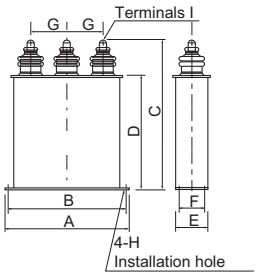

	Model	A	B	C	D	E	F	G	H	I	Mass(kg)
200 V	MT-BSC-75K	207	191	285	233	72	41	45	φ7	M8	3.9
	MT-BSC-90K	282	266	240	183	92	56	85	φ7	M12	5.5
400 V	MT-BSC-H75K	207	191	220	173	72	41	55	φ7	M6	3.0
	MT-BSC-H110K	207	191	280	233	72	41	55	φ7	M6	4.0

When installing, allow 25 mm or more gap between capacitors.

• Recommended cable gauge

The gauge of the cables used between the inverter and the MT-BSL as well as the MT-BSL and the induction motor varies according to U, V, and W as indicated on **page 215**.
The following table shows the cable gauge of the MT-BSC connecting cable.

MT-BSC-75K	MT-BSC-90K	MT-BSC-H75K	MT-BSC-H110K
38 mm^2	38 mm^2	22 mm^2	22 mm^2

● Dedicated cable option

Name (model)	Specification and structure
Encoder cable FR-V7CBL[]	

• For dedicated motors

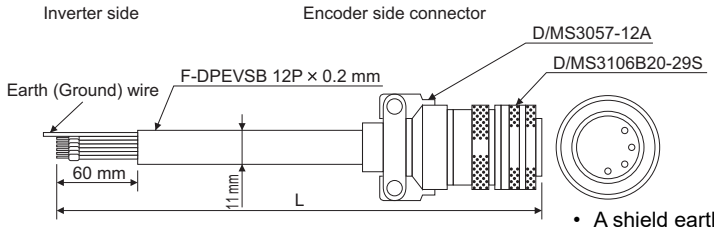

• A shield earthing (grounding) P-clip is included.

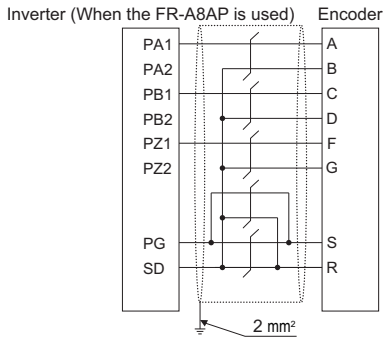

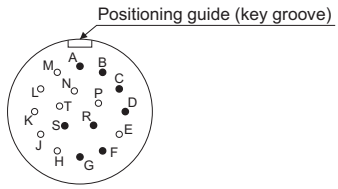

D/MS3106B20-29S
(As viewed from wiring side)

Model	Length L (m)
FR-V7CBL5	5
FR-V7CBL15	15
FR-V7CBL30	30

• For cables of 30 m or longer, contact your sales representative.

• Cable fabrication specifications
When option connection cables are not available, fabricate cables according to the following table.
Use parallel connection or a large-gauge cable for wiring between terminals PG and SD and the motor end encoder. (For cables for other terminals, use cables 0.2 mm^2.)

Wiring distance	Options dedicated encoder cable	Cable gauge for terminals PG and SD	
		For wiring using cables 0.2 mm^2	For wiring using a cable with larger gauge
5 m or lower	FR-V7CBL5	2 or more cables in parallel	0.4 mm^2 or more
10 m or lower	FR-V7CBL15	2 or more cables in parallel	
15 m or lower		4 or more cables in parallel	0.75 mm^2 or more
20 m or lower	FR-V7CBL30	4 or more cables in parallel	
30 m or lower		6 or more cables in parallel	1.25 mm^2 or more
50 m or lower	* Cables on order Consult us separately.	6 or more cables in parallel	
100 m or lower			

Encoder connector (DDK Ltd.) (reference) (unit: mm)

Straight plug D/MS3106B20-29S

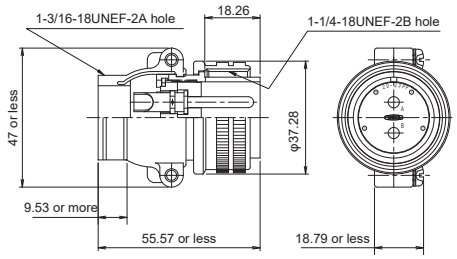

Angle plug D/MS3108B20-29S

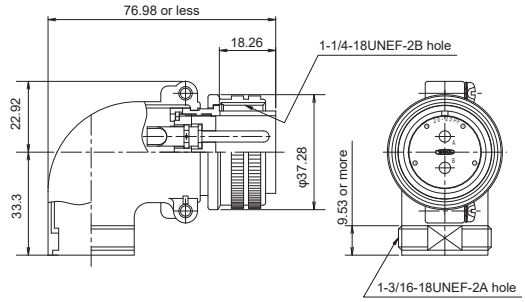

• This angle type connector is not an option item. Prepare the connector at the customer's side.

Cable clamp D/MS3057-12A

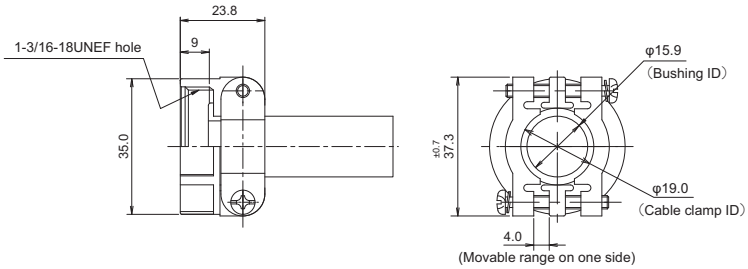

● Cable glands and nuts (IP55 compatible model)

For wiring of the IP55 compatible model, fix the cables using a cable gland and a nut, according to the diameter of the holes of the wiring cover.
For the details such as wiring cover hole diameters and recommended cable glands, refer to the following table.

FR-A846-00023(0.4K) to 00170(5.5K)

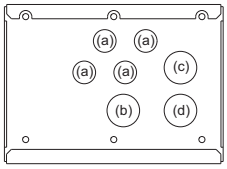

FR-A846-00250(7.5K) to 00470(18.5K)

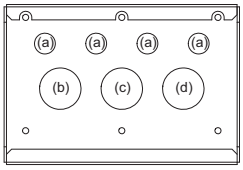

FR-A846-00620(22K) to 01160(45K)

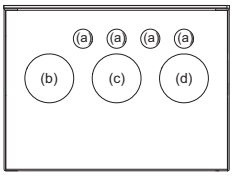

FR-A846-01800(55K) to 03610(132K)

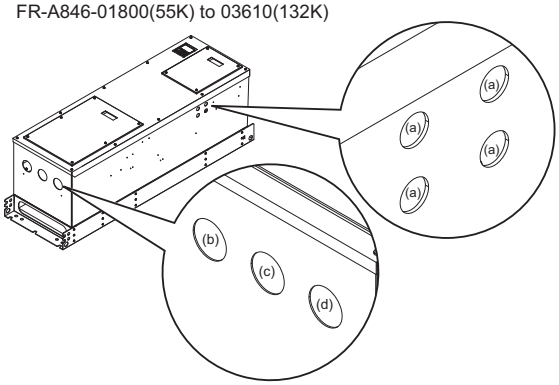

Inverter capacity	Symbol	Recommended layout example	Hole diameter (mm)	Recommended cable gland (Manufactured by LAPP KABEL)	Recommended nut (Manufactured by LAPP KABEL)
FR-A846-00023(0.4K) to 00170(5.5K)	(a)	Control circuit wiring	20.3	SKINTOP MS-SC-M20 53112630 *1 SKINTOP MS-M20 53112020 *2	SKINDICHT SM-M20 52103020
	(b)	AC power input wiring	32.3	SKINTOP MS-SC-M32 53112650 *1 SKINTOP MS-M32 BRUSH 53112677 *1 SKINTOP MS-M32 53112040 *2	SKINDICHT SM-M32 52103040
	(c)	Brake unit connection wiring			
	(d)	Inverter output wiring			
FR-A846-00250(7.5K) to 00470(18.5K)	(a)	Control circuit wiring	20.3	SKINTOP MS-SC-M20 53112630 *1 SKINTOP MS-M20 53112020 *2	SKINDICHT SM-M32 52103020
	(b)	AC power input wiring	40.4	SKINTOP MS-SC-M40 53112660 *1 SKINTOP MS-M40 BRUSH 53112678 *1 SKINTOP MS-M40 53112050 *2	SKINDICHT SM-M40 52103050
	(c)	Brake unit connection wiring			
	(d)	Inverter output wiring			
FR-A846-00620(22K) to 02600(90K)	(a)	Control circuit wiring	20.3	SKINTOP MS-SC-M20 53112630 *1 SKINTOP MS-M20 53112020	SKINDICHT SM-M20 52103020
	(b)	AC power input wiring	63	SKINTOP MS-M63 BRUSH 53112680 *1 SKINTOP MS-M63 53112070 *2	SKINDICHT SM-M63 52103070
	(c)	Brake unit connection wiring			
	(d)	Inverter output wiring			
FR-A846-03250(110K) to 03610(132K)	(a)	Control circuit wiring	20.3	SKINTOP MS-SC-M20 53112630 *1 SKINTOP MS-M20 53112020 *2	SKINDICHT SM-M20 52103020
	(b)	AC power input wiring	63	SKINTOP MS-M63 BRUSH PLUS 53112681 *1 SKINTOP MS-M63 PLUS 53112080 *2	SKINDICHT SM-M63 52103070
	(c)	Brake unit connection wiring			
	(d)	Inverter output wiring			

*1 EMC-compliant cable gland
*2 General-purpose cable gland

Recommended EMI filter

To support compliance with shipping classifications, use the following input line filter or an equivalent for electromagnetic compatibility (EMC). The following table indicates the specifications of the EMI filters used with inverters.

Inverter model FR-A840-[ ]	EMI filter model (Soshin Electric Co., Ltd.)			
	SLD	LD	ND	HD
00023(0.4K)	HF3010C-SZA			
00038(0.75K)				
00052(1.5K)				
00083(2.2K)	HF3020C-SZA			
00126(3.7K)				
00170(5.5K)	HF3030C-SZA		HF3020C-SZA	
00250(7.5K)	HF3030C-SZA			
00310(11K)	HF3040C-SZA			
00380(15K)	HF3050C-SZA		HF3040C-SZA	
00470(18.5K)	HF3060C-SZA			
00620(22K)	HF3080C-SZA			
00770(30K)	HF3100C-SZA			
00930(37K)	HF3150C-SZA	HF3100C-SZA		
01160(45K)	HF3150C-SZA			
01800(55K)	HF3200C-SZA			
02160(75K)	HF3250C-SZA			
02600(90K)				

Inverter model FR-A840-[ ]	EMI filter model (Soshin Electric Co., Ltd.)			
	SLD	LD	ND	HD
03250(110K)	HF3600C-SJB	HF3300C-SJB		
03610(132K)	HF3600C-SJB		HF3300C-SJB	
04320(160K)	HF3600C-SJB			
04810(185K)				
05470(220K)				
06100(250K)				
06830(280K)	HF31000C-SJB			

Inverter model FR-A842-[ ]	EMI filter model			
	SLD	LD	ND	HD
07700(315K)	HF31000C-SJB			
08660(355K)				
09620(400K)				
10940(450K)	HF31200C-SJB			
12120(500K)	HF31600C-SJB			

- Noise filter wiring example
  Install the recommended EMI filter by Soshin Electric Co., Ltd. to the input side of the inverter, as shown below.

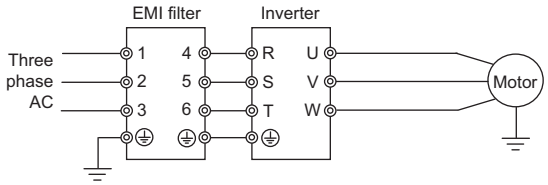

Recommended ferrite core (IP55 compatible model)

To support compliance with shipping classifications, install the recommended ferrite core (ESD-SR-250 manufactured by TOKIN Corporation) or an equivalent by two turns (passing the cable twice through the core) for wiring of control circuit terminals for electromagnetic compatibility (EMC).

Example of installing ferrite cores

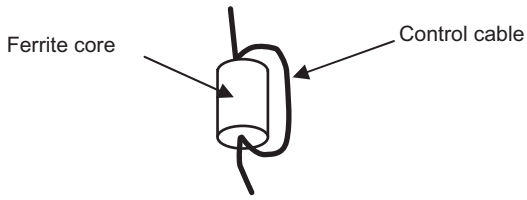

For using one ferrite core

For using two ferrite cores

● Mitsubishi Electric Molded Case Circuit Breakers and Earth Leakage Circuit Breakers WS-V Series

"WS-V Series" is the new circuit breakers that have a lot of superior aspects such as higher breaking capacity, design for easy use, standardization of accessory parts, and compliance to the global standards.

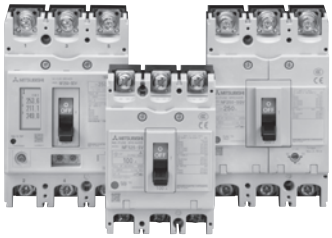

◆ Features

◆ Technologies based on long years of experience are brought together to achieve improved performance

The new circuit breaking technology "Expanded ISTAC" has improved the currentlimiting performance and upgraded the overall breaking capacity.
Expansion of the conductor under the stator shortens the contact parting time of the mover as compared to the conventional ISTAC structure.
The current-limiting performance has been improved remarkably. (The maximum peak current value has been reduced by approx. 10%.)

New circuit breaking technology (Expanded ISTAC)

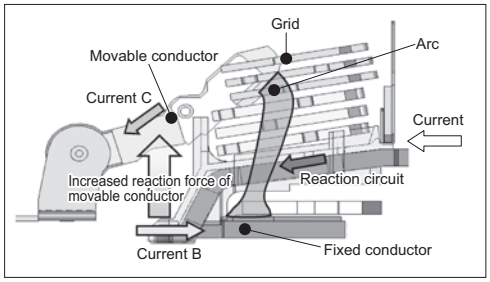

◆ Compact design for ease of use

The thermal adjustable circuit breakers and electronic circuit breakers are smaller.

NF250-SGW

(Conventional model: 105 × 165 × 86 mm)

NF250-SGV

(New model: 105 × 165 × 68 mm)

Volume ratio 79%
(Compared with our conventional models)

■ Breaking capacity comparison with a conventional model

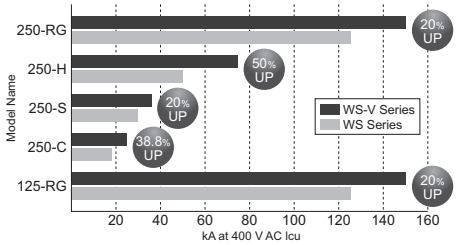

◆ Types of internal accessories are reduced from 3 types to 1 type

Standardization of internal accessories contributes to a reduction of stock and delivery time.

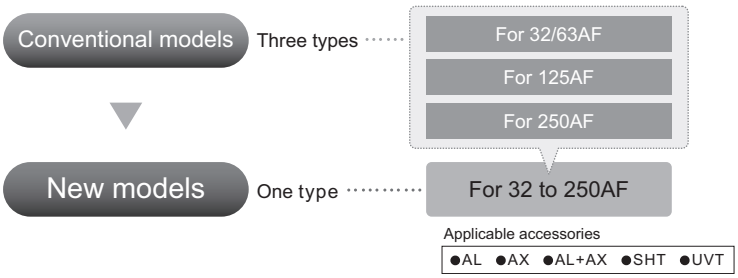

◆ Lineup of UL 489 listed circuit breakers with 54 mm width "Small Fit" F Style

The compact breakers contribute to a size reduction of machines, and IEC 35 mm rail mounting is standard.

NF50-SVFU

NF100-CVFU

NV50-SVFU

NV100-CVFU

For security and standard compliance of machines, F-type and V-type operating handles are available for breakers with 54 mm width.

◆ Lineup of UL 489 listed circuit breakers for 480 V AC "High Performance"

The breaking capacity has been improved to satisfy the request for SCCR upgrading.

NF125-SVU

NF125-HVU

NF250-SVU

NF250-HVU

Breaking capacity of UL 489 listed circuit breakers for 480 V AC (UL 489)
NF125-SVU/NV125-SVU .....30 kA
NF125-HVU/NV125-HVU .....50 kA
NF250-SVU/NV250-SVU .....35 kA
NF250-HVU/NV250-HVU .....50 kA

● Mitsubishi Electric Magnetic Motor Starters and Magnetic Contactors MS-T Series

Mitsubishi Electric magnetic motor starters have been newly designed and the MS-T series has been released..
The MS-T series is smaller than ever, enabling more compact control panel. The MS-T series is suitable for other Mitsubishi Electric FA equipment. In addition, the MS-T conforms to a variety of global standards, supporting the global use.

S-T10

◆ Features

◆ Compact

The width of the 10 A-frame model is as small as 36 mm.
General-purpose magnetic contactor with smallest width*1 in the industry.
The width of MS-T series is reduced by 32% as compared to the prior MS-N series, enabling a more compact panel.
For selection, refer to **page 215**.

*1 Based on Mitsubishi Electric research as of September 2015 in the general-purpose magnetic contactor industry for 10 A-frame class.

[Unit: mm]

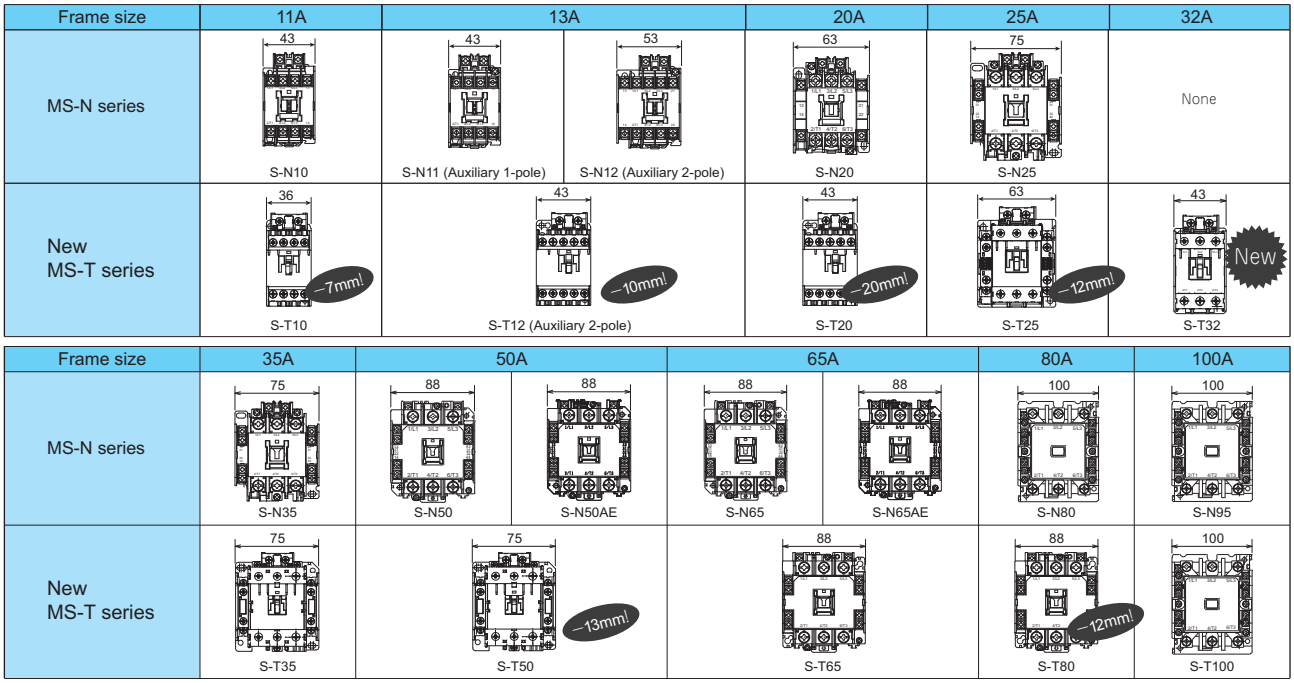

◆ Standardization

- Covers provided as standard equipment
  Safety improvement is achieved by the standard terminal cover.
  It is not necessary for the new MS-T series to order a dedicated terminal cover (S-N[]CX) or a retrofit cover (UN-CW, etc.), which is required for the former MS-N series. (Prevention of failure to order)
  The number of items in stock can be reduced.
- The standard integrated terminal cover eliminates the need for additional ordering.

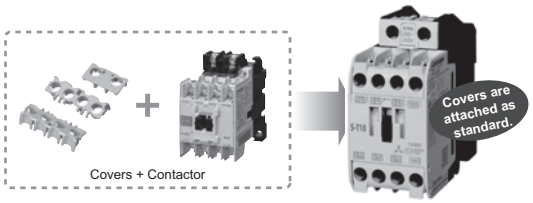

(Conventional product) (MS-T series)

- Widened range of operation coil ratings (AC operated model)
  The widened range reduces the number of operation coil rating types from 13 (MS-N series) to 7.
  The reduced number of the operation coil types enables more simplified customers' ordering process and the faster delivery.
- Customers can select the operation coil more easily.

(Conventional product)

Coil designation	Rated voltage [V] 50 Hz	Rated voltage [V] 60 Hz
24 VAC	24	24
48 VAC	48 to 50	48 to 50
100 VAC	100	100 to 110
120 VAC	110 to 120	115 to 120
127 VAC	125 to 127	127
200 VAC	200	200 to 220
220 VAC	208 to 220	220
230 VAC	220 to 240	230 to 240
260 VAC	240 to 260	260 to 280
380 VAC	346 to 380	380
400 VAC	380 to 415	400 to 440
440 VAC	415−440	460 to 480
500 VAC	500	500 to 550

(MS-T series)

Coil designation	Rated voltage [V] 50 Hz/60 Hz
24 VAC	24
48 VAC	48 to 50
100 VAC	100 to 127
200 VAC	200 to 240
300 VAC	260 to 300
400 VAC	380 to 440
500 VAC	460 to 550

Integrated coil ratings facilitate selection!

*12 VAC type is made on order.

◆ Global Standard

- Conforms to various global standards
  Our magnetic contactors are certified as compliant not only with major international standards such as IEC, JIS, UL, CE, and CCC but also with ship classification standards and country specific standards.
  This will help our customers expand their business overseas.

Standard	Applicable Standard					Safety Standard
	International	Japan	Europe		China	U.S.A./ Canada
	IEC*2	JIS	EN / EC Directive	Certification body	GB	
			CE	TÜV Rheinland	CCC *3	c UL us

*2 The MS-T series also provide safe isolation (mirror contact) specified in the IEC standard.
*3 The motor starters are certified under each type name of the magnetic contactors and the thermal overload relays on the condition that the magnetic contactors and the thermal overload relays are used in combination.

● Mitsubishi Electric Magnetic Motor Starters and Magnetic Contactors MS-N Series (32 A-Frame Class or Higher)

S-N35CX

Environment-friendly Mitsubishi Electric MS-N series ensures safety and conforms to various global standards. Its compact size contributes to space-saving in a machine. The MS-N series is suitable for other Mitsubishi Electric FA equipment and can be used globally.

◆ Features

◆ Bifurcated contact adopted to achieve high contact reliability

Contact reliability is greatly improved by combining bifurcated moving contact and stationary contact.
This series responds to the various needs such as the application to safety circuit.
(The MS-T series also has bifurcated contacts.)

◆ Mirror contact (auxiliary contact off at main contact welding)

The MS-N series meets requirements of "Control functions in the event of failure" described in EN 60204-1 "Electrical equipment of machines", being suitable as interlock circuit contact. The MS-N series is applicable for category 4 safety circuit. We ensure safety for our customers.
(The MS-T series also has mirror contacts.)

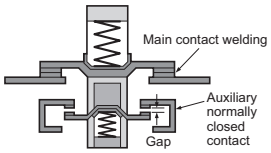

◆ Various option units

Various options including surge absorbers and additional auxiliary contact blocks are available.

● Motor Circuit Breaker MMP-T Series

MMP-T32

Motor circuit protection (against overload / phase loss / short-circuit) is achievable the MMP-T series alone.
The wire-saving, space-saving design enables downsizing of the enclosure.
The MMP-T series can be used in combination with the MS-T series (DC operated model).*1

*1 The connection conductor unit for the DC operated compact model (SD-T) is to be released soon.

◆ Features

◆ What is the motor circuit breaker?

The motor circuit breaker, applicable to the motor circuit, has the functions of a circuit breaker and a thermal overload relay in one unit. The motor circuit breaker provides protection against overload, phase loss, and short circuit.

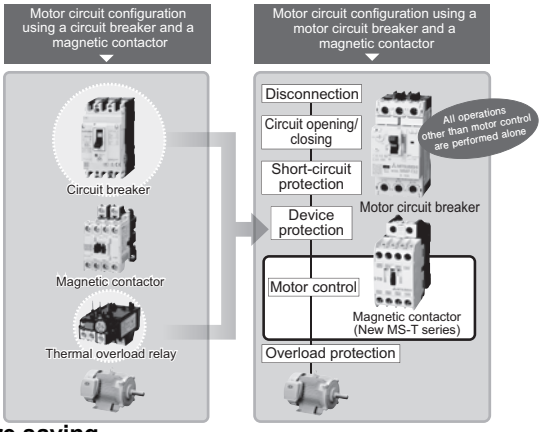

◆ Space-saving design for downsizing of the enclosure

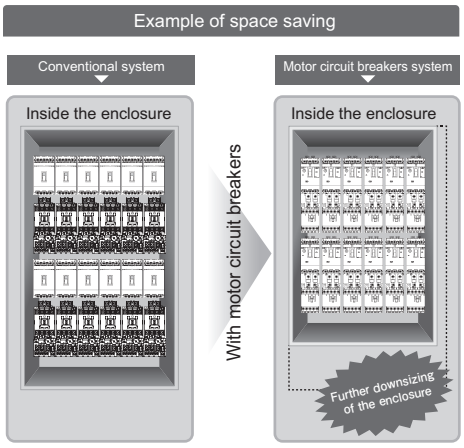

◆ Wire saving

Using a connection conductor unit (option) for connecting a motor circuit breaker and a contactor reduces work hours required for wiring.
A connection conductor unit for the high sensitivity contactor (SD-Q) is also available. (Model: UT-MQ12)

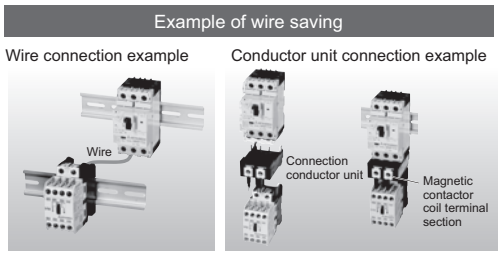

UT-MQ12 application example

◆ Compliance to major standards support customers' overseas business

- Compliance with major global standards
  Not only major international standards such as IEC, JIS, UL, CE, and CCC but also other national standards are certified. This will help our customers expand their business in foreign countries.

Standard	Applicable Standard					Safety Standard
	International	Japan	Europe		China	U.S.A./ Canada
	IEC	JIS	EN EC Directive CE	Certification body TÜV Rheinland	GB CCC	c UL us

- UL60947-4-1A Type E/F is also covered.
  Compliance of the device to UL's Type E/F combination can surely support export to the United States.

● Selecting the rated sensitivity current for the earth leakage circuit breaker

When using an earth leakage circuit breaker with the inverter circuit, select its rated sensitivity current as follows, independently of the PWM carrier frequency.

- Breaker designed for harmonic and surge suppression
  Rated sensitivity current
  $I\Delta n \geq 10 \times (Ig1+Ign+Igi+Ig2+Igm)$
- Standard breaker
  Rated sensitivity current
  $I\Delta n \geq 10 \times \{Ig1+Ign+Igi+3 \times (Ig2+Igm)\}$
  Ig1, Ig2: Leakage currents in wire path during commercial power supply operation
  Ign: Leakage current of inverter input side noise filter
  Igm: Leakage current of motor during commercial power supply operation
  Igi: Leakage current of inverter unit

Example of leakage current of cable path per 1 km during the commercial power supply operation when the CV cable is routed in metal conduit
(200 V 60 Hz)

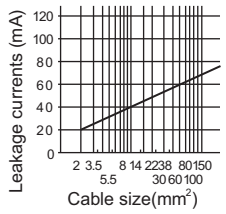

Leakage current example of three-phase induction motor during the commercial power supply operation
(200 V 60 Hz)

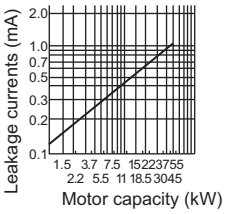

Example of leakage current per 1 km during the commercial power supply operation when the CV cable is routed in metal conduit
(Three-phase three-wire delta connection 400 V 60 Hz)

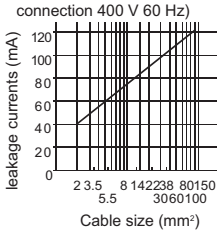

Leakage current example of three-phase induction motor during the commercial power supply operation
(Totally-enclosed fan-cooled type motor 400 V 60 Hz)

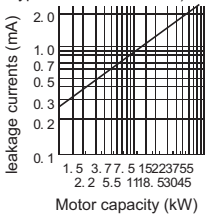

For "⅄" connection, the amount of leakage current is appox.1/3 of the above value.

<Example>

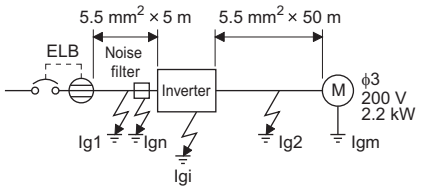

(a) Install the earth leakage circuit breaker (ELB) on the input side of the inverter.

(b) In the ⅄ connection earthed-neutral system, the sensitivity current is blunt against a ground fault in the inverter output side. Earthing (Grounding) must conform to the requirements of national and local safety regulations and electrical codes. (NEC section 250, IEC 61140 class 1 and other applicable standards)

◆ Selection example (in the case of the above figure)

	Breaker designed for harmonic and surge suppression	Standard breaker
Leakage current Ig1 (mA)	$33 \times \frac{5\ m}{1000\ m} = 0.17$	
Leakage current Ign (mA)	0 (without noise filter)	
Leakage current Igi (mA)	1 (without EMC filter) Refer to the following table for the leakage current of the inverter.*1	
Leakage current Ig2 (mA)	$33 \times \frac{50\ m}{1000\ m} = 1.65$	
Motor leakage current Igm (mA)	0.18	
Total leakage current (mA)	3.00	6.66
Rated sensitivity current (mA) (≥Ig × 10)	30	100

*1 For whether to use the EMC filter or not, refer to the Instruction Manual (Detailed).

◆ Inverter/converter unit leakage current

200 V class (Input power supply conditions: 220 V/60 Hz, power supply unbalance: within 3%)

Inverter	FR-A800 (Standard model)	
EMC filter	ON	OFF
Phase earthing (grounding)	22	1

(mA)

400 V class (Input power supply conditions: 440 V/60 Hz, power supply unbalance: within 3%)

Inverter/ converter unit	FR-A800 (Standard model)		FR-A846-C3 (IP55 compatible model)		FR-A846-C2 (IP55 compatible model)	FR-A842 (Separated converter type)	Converter unit FR-CC2	
EMC filter	ON	OFF	ON	OFF	ON *1	—	ON	OFF
Phase earthing (grounding)	35	2	35	2	— *2	2	70	2
Earthed-neutral system	2	1	2	1	2	1	2	1

(mA)

*1 Do not change the initially set ON (enabled) position of the EMC filter ON/OFF connector in the case of the inverter with a built-in C2 filter. The Class C2 compatibility condition is not satisfied with the EMC filter OFF. (The FR-A846-00250(7.5K)-C2 to FR-A846-00470(18.5K)-C2 are not provided with the EMC filter ON/OFF connector. The EMC filter is always ON.)

*2 The inverter with a built-in C2 filter must be used in the earthed-neutral system.

● Molded case circuit breaker, magnetic contactor, cable gauge

◆ 280K or lower

Voltage	Motor output (kW) *1	Applicable inverter model (ND rating)	Molded case circuit breaker (MCCB) *2 or earth leakage circuit breaker (ELB) (NF, NV type)		Input side magnetic contactor *3		Recommended cable gauge (mm^2) *4		
							R/L1, S/L2, T/L3		U, V, W
			Power factor improving (AC or DC) reactor connection		Power factor improving (AC or DC) reactor connection		Power factor improving (AC or DC) reactor connection		
			Without	With	Without	With	Without	With	
200 V	0.4	FR-A820-00046(0.4K)	5 A	5 A	S-T10	S-T10	2	2	2
	0.75	FR-A820-00077(0.75K)	10 A	10 A	S-T10	S-T10	2	2	2
	1.5	FR-A820-00105(1.5K)	15 A	15 A	S-T10	S-T10	2	2	2
	2.2	FR-A820-00167(2.2K)	20 A	15 A	S-T10	S-T10	2	2	2
	3.7	FR-A820-00250(3.7K)	30 A	30 A	S-T21	S-T10	3.5	3.5	3.5
	5.5	FR-A820-00340(5.5K)	50 A	40 A	S-T35	S-T21	5.5	5.5	5.5
	7.5	FR-A820-00490(7.5K)	60 A	50 A	S-T35	S-T35	14	14	8
	11	FR-A820-00630(11K)	75 A	75 A	S-T35	S-T35	14	14	14
	15	FR-A820-00770(15K)	125 A	100 A	S-T50	S-T50	22	22	22
	18.5	FR-A820-00930(18.5K)	150 A	125 A	S-T65	S-T50	38	22	22
	22	FR-A820-01250(22K)	175 A	125 A	S-T100	S-T65	38	38	38
	30	FR-A820-01540(30K)	225 A	150 A	S-T100	S-T100	60	60	60
	37	FR-A820-01870(37K)	250 A	200 A	S-N150	S-N125	80	60	60
	45	FR-A820-02330(45K)	300 A	225 A	S-N180	S-N150	100	100	100
	55	FR-A820-03160(55K)	400 A	300 A	S-N220	S-N180	100	100	100
	75	FR-A820-03800(75K)	-	400 A	-	S-N300	-	125	125
	90	FR-A820-04750(90K)	-	400 A	-	S-N300	-	150	150
400 V	0.4	FR-A840-00023(0.4K)	5 A	5 A	S-T10	S-T10	2	2	2
	0.75	FR-A840-00038(0.75K)	5 A	5 A	S-T10	S-T10	2	2	2
	1.5	FR-A840-00052(1.5K)	10 A	10 A	S-T10	S-T10	2	2	2
	2.2	FR-A840-00083(2.2K)	10 A	10 A	S-T10	S-T10	2	2	2
	3.7	FR-A840-00126(3.7K)	20 A	15 A	S-T10	S-T10	2	2	2
	5.5	FR-A840-00170(5.5K)	30 A	20 A	S-T21	S-T12	2	2	2
	7.5	FR-A840-00250(7.5K)	30 A	30 A	S-T21	S-T21	3.5	3.5	3.5
	11	FR-A840-00310(11K)	50 A	40 A	S-T21	S-T21	5.5	5.5	5.5
	15	FR-A840-00380(15K)	60 A	50 A	S-T35	S-T21	8	5.5	5.5
	18.5	FR-A840-00470(18.5K)	75 A	60 A	S-T35	S-T35	14	8	8
	22	FR-A840-00620(22K)	100 A	75 A	S-T35	S-T35	14	14	14
	30	FR-A840-00770(30K)	125 A	100 A	S-T50	S-T50	22	22	22
	37	FR-A840-00930(37K)	150 A	100 A	S-T65	S-T50	22	22	22
	45	FR-A840-01160(45K)	175 A	125 A	S-T100	S-T65	38	38	38
	55	FR-A840-01800(55K)	200 A	150 A	S-T100	S-T100	60	60	60
	75	FR-A840-02160(75K)	-	200 A	-	S-T100	-	60	60
	90	FR-A840-02600(90K)	-	225 A	-	S-N150	-	60	60
	110	FR-A840-03250(110K)	-	225 A	-	S-N180	-	80	80
	132	FR-A840-03610(132K)	-	350 A	-	S-N220	-	100	100
	150	FR-A840-04320(160K)	-	400 A	-	S-N300	-	125	125
	160	FR-A840-04320(160K)	-	400 A	-	S-N300	-	125	125
	185	FR-A840-04810(185K)	-	400 A	-	S-N300	-	150	150
	220	FR-A840-05470(220K)	-	500 A	-	S-N400	-	2×100	2×100
	250	FR-A840-06100(250K)	-	600 A	-	S-N600	-	2×100	2×100
	280	FR-A840-06830(280K)	-	600 A	-	S-N600	-	2×125	2×125

*1 Assumes the use of a Mitsubishi Electric 4-pole standard motor with the motor capacity of 200 VAC 50 Hz.

*2 Select an MCCB according to the power supply capacity.
Install one MCCB per inverter.
(For the use in the United States or Canada, refer to "Instructions for UL and cUL" in the Instruction Manual (Startup), and select an appropriate fuse or molded case circuit breaker (MCCB).)

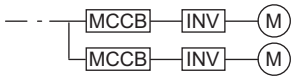

*3 The magnetic contactor is selected based on the AC-1 class. The electrical durability of magnetic contactor is 500,000 times. When the magnetic contactor is used for emergency stops during motor driving, the electrical durability is 25 times.
If using an MC for emergency stop during motor driving or using it on the motor side during commercial power supply operation, select an MC with the class AC-3 rated current for the rated motor current.

*4 Cables
For the FR-A820-03160(55K) or lower and the FR-A840-01800(55K) or lower, it is the gauge of a cable with the continuous maximum permissible temperature of 75°C. (HIV cable (600 V grade heat-resistant PVC insulated wire), etc.) It assumes a surrounding air temperature of 50°C or lower and the wiring distance of 20 m or shorter.
For the FR-A820-03800(75K) or higher and the FR-A840-02160(75K) or higher, it is the gauge of the cable with the continuous maximum permissible temperature of 90°C or higher. (LMFC (heat resistant flexible cross-linked polyethylene insulated cable), etc.) It assumes a surrounding air temperature of 50°C or lower and in-enclosure wiring.

NOTE

- When the inverter capacity is larger than the motor capacity, select an MCCB and a magnetic contactor according to the inverter model, and select cables and reactors according to the motor output.
- When the breaker on the inverter's input side trips, check for the wiring fault (short circuit), damage to internal parts of the inverter etc. The cause of the trip must be identified and removed before turning ON the power of the breaker.

◆ 315K or higher

Voltage	Motor output (kW) *1	Applicable inverter model (ND rating)	Applicable converter model	Molded case circuit breaker (MCCB) *2 or earth leakage circuit breaker (ELB) (NF, NV type)	Input-side magnetic contactor *3	HIV cables, etc. (mm^2) *4		
						R/L1, S/L2, T/L3	P/+, N/-	U, V, W
400 V	315	FR-A842-07700(315K)	FR-CC2-H315K	700 A	S-N600	2×150	2×150	2×150
	355	FR-A842-08660(355K)	FR-CC2-H355K	800 A	S-N600	2×200	2×200	2×200
	400	FR-A842-09620(400K)	FR-CC2-H400K	900 A	S-N800	2×200	2×200	2×200
	450	FR-A842-10940(450K)	FR-CC2-H450K	1000 A	1000 A rated product	2×250	2×250	2×250
	500	FR-A842-12120(500K)	FR-CC2-H500K	1200 A	1000 A rated product	3×200	3×200	2×250

*1 Assumes the use of a Mitsubishi Electric 4-pole standard motor with the motor capacity of 400 VAC 50 Hz.

*2 Select an MCCB according to the power supply capacity.
Install one MCCB per converter.
(For the use in the United States or Canada, refer to "Instructions for UL and cUL" in the Instruction Manual (Hardware), and select an appropriate fuse or molded case circuit breaker (MCCB).)

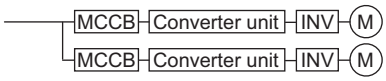

*3 The magnetic contactor is selected based on the AC-1 class. The electrical durability of magnetic contactor is 500,000 times. When the magnetic contactor is used for emergency stops during motor driving, the electrical durability is 25 times.
If using an MC for emergency stop during driving the motor, select an MC regarding the converter unit input side current as JEM1038-AC-3 class rated current. When using an MC on the inverter output side for commercial-power supply operation switching using a general-purpose motor, select an MC regarding the rated motor current as JEM1038-AC-3 class rated current.

*4 The gauge of the cable with the continuous maximum permissible temperature of 90°C or higher. (LMFC (heat resistant flexible cross-linked polyethylene insulated cable), etc.). It assumes a surrounding air temperature of 40°C or lower and in-enclosure wiring.

NOTE

- When the converter unit capacity is larger than the motor capacity, select an MCCB and a magnetic contactor according to the converter unit model, and select cables and reactors according to the motor output.
- When the breaker on the converter unit's input side trips, check for the wiring fault (short circuit), damage to internal parts of the inverter and the converter unit, etc. The cause of the trip must be identified and removed before turning ON the power of the breaker.

Precautions for use

◆ ⚠ Safety instructions

- To use the product safely and correctly, make sure to read the "Instruction Manual" before the use.
- This product has not been designed or manufactured for use with any equipment or system operated under life-threatening conditions.
- Please contact our sales representative when considering using this product in special applications such as passenger mobile, medical, aerospace, nuclear, power or undersea relay equipment or system.
- Although this product was manufactured under conditions of strict quality control, install safety devices to prevent serious accidents when it is used in facilities where breakdowns of the product or other failures are likely to cause a serious accident.
- Do not use the inverter for a load other than the three-phase induction motor and the PM motor.
- Do not connect a PM motor in the induction motor control settings (initial settings). Do not use an induction motor in the PM sensorless vector control settings. It will cause a failure.
- When using an IPM motor (MM-CF), also refer to the precautions for use of the IPM motors (MM-CF).

◆ Operation

- When a magnetic contactor (MC) is installed on the input side, do not use the MC for frequent starting/stopping. Otherwise the inverter may be damaged.
- When a fault occurs in the inverter, the protective function is acticvated to stop the inverter output. However, the motor cannot be immediately stopped. For machinery and equipment that require an immediate stop, provide a mechanical stop/holding mechanism.
- Even after turning OFF the inverter/the converter unit, it takes time to discharge the capacitor. Before performing an inspection, wait 10 minutes or longer after the power supply turns OFF, then check the voltage using a tester, etc.

◆ Wiring

- Applying the power to the inverter output terminals (U, V, W) causes a damage to the inverter. Before power-on, thoroughly check the wiring and sequence to prevent incorrect wiring, etc.
- Terminals P/+, P1, N/-, and P3 are the terminals to connect dedicated options or DC power supply (in the DC feeding mode). Do not connect any device other than the dedicated options or DC power supply (in the DC feeding mode). Do not short-circuit between the frequency setting power supply terminal 10 and the common terminal 5, and between terminals PC and SD.
- To prevent a malfunction due to noise, keep the signal cables 10cm or more away from the power cables. Also, separate the main circuit cables at the input side from the main circuit cables at the output side.
- After wiring, wire offcuts must not be left in the inverter/the converter unit. Wire offcuts can cause an alarm, failure or malfunction. Always keep the inverter/the converter unit clean. When drilling mounting holes in an enclosure etc., take caution not to allow chips and other foreign matter to enter the inverter/the converter unit.
- Set the voltage/current input switch correctly. Incorrect setting may cause a fault, failure or malfunction.

◆ Power supply

- When the inverter is connected near a large-capacity power transformer (1000 kVA or more) or when a power factor correction capacitor is to be switched over, an excessive peak current may flow in the power input circuit, damaging the inverter. To prevent this, always install an optional AC reactor (FR-HAL).

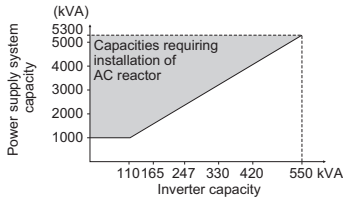

- If surge voltage occurs in the power supply system, this surge energy may flow into an inverter, and the inverter may display the overvoltage protection (E. OV[]) and trip. To prevent this, install an optional AC reactor (FR-HAL).

◆ Installation

- Install the inverter in a clean place with no floating oil mist, cotton fly, dust and dirt, etc. Alternatively, install the inverter inside the "sealed type" enclosure that prevents entry of suspended substances. For installation in the enclosure, decide the cooling method and the enclosure size to keep the surrounding air temperature of the inverter/the converter unit within the permissible range (for specifications, refer to **page 33**).
- Some parts of the inverter/the converter unit become extremely hot. Do not install the inverter/the converter unit to inflammable materials (wood etc.).
- Attach the inverter vertically.

◆ Setting

- Depending on the parameter setting, high-speed operation (up to 590 Hz) is available. Incorrect setting will lead to a dangerous situation. Set the upper limit by using the upper frequency limit setting.
- Setting the DC injection brake operation voltage and operating time larger than their initial values causes motor overheating (electronic thermal O/L relay trip).

◆ Real sensorless vector control

- Under Real sensorless vector control, always execute offline auto tuning before starting operations.
- The selectable carrier frequencies under Real sensorless vector control are 2, 6, 10, and 14 kHz.
- Torque control is not available in the low-speed (about 10 Hz or less) regenerative range, or in the low speed with the light load (about 5 Hz or less with about 20% or less of the rated torque). Select the vector control.
- Performing pre-excitation (LX signal and X13 signal) under torque control may start the motor running at a low speed even when the start command (STF or STR) is not input. The motor may run also at a low speed when the speed limit value = 0 with a start command input. Confirm that the motor running will not cause any safety problem before performing pre-excitation.
- Under torque control, do not switch between the forward rotation command (STF) and reverse rotation command (STR). The overcurrent trip (E. OC[]) or opposite rotation deceleration fault (E.11) occurs.
- For FR-A820-00250(3.7K) or lower and FR-A840-00126(3.7K) or lower, if continuous operation is performed under Real sensorless vector control, speed fluctuation may increase at 20 Hz or lower, or insufficient torque may occur in a low-speed range under 1 Hz. In such a case, stop the inverter once and re-accelerate it.
- If the inverter may restart during coasting under Real sensorless vector control, set the automatic restart after instantaneous power failure function to enable frequency search (**Pr.57** ≠ "9999", **Pr.162** = "10").
- Under Real sensorless vector control, sufficient torque may not be obtained in the extremely low-speed range of about 2 Hz or less.
- The approximate speed control range is as described below.
  Power drive: 1:200 (2, 4, 6 poles), 0.3 Hz or more for 60 Hz rating.
  1:30 (8, 10 poles), 2 Hz or more for 60 Hz rating
  Regenerative driving: 1:12 (2 to 10 poles), 5 Hz or more for 60 Hz rating

◆ Waterproof and dustproof performances (IP55 compatible model)

- The inverter is rated with an IPX5*1 waterproof rating and an IP5X*2 dustproof rating when the operation panel (FR-DU08-01), the front cover, the wiring cover, and the cable glands are securely fixed with screws.
- The items enclosed with the inverter such as the Instruction Manual or CD are not rated with the IPX5 waterproof or IP5X dustproof ratings.
- Although the inverter is rated with the IPX5 waterproof and IP5X dustproof ratings, it is not intended for use in water. Also, the ratings do not guarantee protection of the inverter from needless submersion in water or being washed under strong running water such as a shower.
- Do not pour or apply the following liquids over the inverter: water containing soap, detergent, or bath additives; sea water; swimming pool water; warm water; boiling water; etc.
- The inverter is intended for indoor*4 installation and not for outdoor installation. Avoid places where the inverter is subjected to direct sunlight, rain, sleet, snow, or freezing temperatures.
- If the operation panel (FR-DU08-01) is not installed, if the screws of the operation panel are not tightened, or if the operation panel is damaged or deformed, the IPX5 waterproof performance and the IP5X dustproof performance are impaired. If any abnormalities are found on the operation panel, ask for an inspection and repair.
- If the screws of the front cover or the wiring cover are not tightened, if any foreign matter (hair, sand grain, fiber, etc.) is stuck between the inverter and the gasket, if the gasket is damaged, or if the front cover or the wiring cover is damaged or deformed, the IPX5 waterproof performance and the IP5X dustproof performance are impaired. If any abnormalities are found on the front cover, wiring cover, or the gasket of the inverter, ask for an inspection and repair.
- Cable glands are important components to maintain the waterproof and dustproof performances. Be sure to use cable glands of the recommended size and shape or equivalent. The standard protective bushes cannot sufficiently maintain the IPX5 waterproof performance and the IP5X dustproof performance.
- If a cable gland is damaged or deformed, the IPX5 waterproof performance and the IP5X dustproof performance are impaired. If any abnormalities are found on the cable glands, ask the manufacturer of the cable glands for an inspection and repair.
- To maintain the waterproof and dustproof performances of the inverter, daily and periodic inspections are recommended regardless of the presence or absence of abnormalities.

*1 IPX5 refers to protection of the inverter functions against water jets from any direction when about 12.5-liter water*3 is injected from a nozzle with an inside diameter of 6.3 mm from the distance of about 3 m for at least 3 minutes.
*2 IP5X refers to protection of the inverter functions and maintenance of safety when the inverter is put into a stirring device containing dust of 75 μm or smaller in diameter, stirred for 8 hours, and then removed from the device.
*3 Water here refers to fresh water at room temperature (5 to 35°C).
*4 Indoor here refers to the environments that are not affected by climate conditions.

● Precautions for use of IPM motor (MM-CF)

For using an IPM motor (MM-CF), also check the following precautions.

◆ ⚠ Safety instructions

- Do not use an IPM motor for an application where the motor is driven by the load and runs at a speed higher than the maximum motor speed.

◆ Combination of motor and inverter

- The motor capacity is equal to or one rank lower than the inverter capacity. (It must be 0.4 kW or higher.)
  Using a motor with the rated current substantially lower than the inverter rated current will cause torque ripples, etc. and degrade the speed and torque accuracies.
  As a reference, select the motor with the rated motor current that is about 40% or higher of the inverter rated current.
- Only one IPM motor can be connected to an inverter.
- An IPM motor cannot be driven by the commercial power supply.

◆ Installation

- While power is ON or for some time after power-OFF, do not touch the motor since the motor may be extremely hot. Touching these devices may cause a burn.
- An outline dimension differs between MM-CF and a standard motor.
- Do not apply the load larger than the permissible load to the motor shaft. Doing so may lead to breakage of the shaft.
- Avoid places where the equipment is subjected to oil mist, dust, dirt, etc. for installation.
  When it is inevitable to install the equipment in such a place, take such measures as to provide a cover to the motor.
- Always use the motor at the specified surrounding air temperature. Increase in the motor temperature may cause the torque to decrease.
- When installing the motor with its shaft facing upward, take countermeasures on the machine side to avoid infiltration of oils from the gear box, etc.
- Select the appropriate cable clamping method to avoid bending stresses or stresses from its own weight at the cable joint section.
- For certain applications in which the motor moves, determine the cable bending radius based on the necessary bending life and the cable type.
- To prevent moving of the power supply cable coming out of the motor, take such measures as to fix the cable to the motor. Otherwise the cable may break.
  Do not modify the connector, terminal, etc. at the end of the cable.

◆ Earth (ground)

- To prevent an electric shock and to stabilize the potential of control circuit, always earth (ground) the motor and inverter.
- Earth (ground) the motor and inverter at one point. Connect the both earth (ground) terminals for the ground connection from the inverter side.

◆ Wiring

- Applying the commercial power supply to input terminals (U,V, W) of a motor will burn the motor. The motor must be connected with the output terminals (U,V, W) of the inverter.
- Do not install a magnetic contactor at the inverter's output side.
- An IPM motor is a motor with permanent magnets embedded inside. High voltage is generated at the motor terminals while the motor is running. Before wiring or inspection, confirm that the motor is stopped.
  In an application, such a as fan or blower, where the motor is driven by the load, a low-voltage manual contactor must be connected at the inverter's output side, and wiring and inspection must be performed while the contactor is open. Otherwise an electric shock may be caused. The inverter power must be turned ON before closing the contacts of the contactor at the output side.
- Match the input terminals (U, V, W) of the motor and the output terminals (U, V, W) of the inverter when connecting.
- Keep the wiring length to 100 m or shorter when connecting an IPM motor .

◆ Operation

- About 0.1 s (magnetic pole detection time) takes to start a motor after inputting a start signal.
- An IPM motor is a motor with embedded permanent magnets. Regression voltage is generated when the motor coasts at an instantaneous power failure or other incidents.
  The inverter's DC bus voltage increases if the motor coasts fast in this condition. When using the automatic restart after instantaneous power failure function, it is recommended to also use the regeneration avoidance operation to make startups stable.
- The relationship between speed and frequency setting is:
  Speed = 120 × frequency setting value / number of motor poles

Speed (r/min)	300	600	900	1200	1500	1800	2000	2400	2700	3000
MM-CF (8 poles) frequency setting (Hz)	20	40	60	80	100	120	133.33	160	180	200

◆ Permissible vibration of the motor

- Bearing is subjected to fretting while the motor is stopped. Suppress the vibration to about the half of the permissible value. Amplitude at each vibration condition is as shown right.

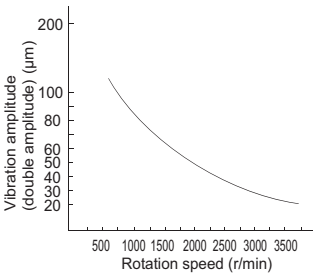

◆ Permissible load of the shaft

- Use the flexible coupling to decrease the shaft center gap to keep its radial load value within the permissible radial load of the shaft.
- When selecting a pulley, sprocket or timing belt, keep its radial load value within the permissible radial load value.
- Do not use a rigid coupling because it gives excessive bending force to the shaft and may break the shaft.

Motor	L (mm) *1	Permissible radial load (N)	Permissible thrust load (N)
MM-CF52(C)(B) to152(C)(B)	55	980	490
MM-CF202(C)(B) to352(C)(B) MM-CF502(C) to702(C)	79	2058	980

*1 For "L" in the table, refer to the figure below.

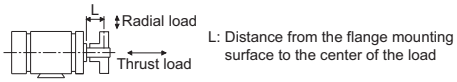

● Selection precautions

◆ Inverter capacity selection

- When operating a special motor or multiple motors in parallel by one inverter, select the inverter capacity so that 1.05 times of the total of the rated motor current becomes less than the rated output current of the inverter.
  (Multiple PM motors cannot be connected to an inverter.)

◆ Starting torque of the motor

- The starting and acceleration characteristics of the motor driven by an inverter are restricted by the overload current rating of the inverter. In general, the torque characteristic has small value compared to when the motor is started by a commercial power supply. When a large starting torque is required, and torque boost adjustment, Advanced magnetic flux vector control, Real sensorless vector control, and vector control cannot generate the sufficient torque, select the HD rating, or increase both the motor and inverter capacities.

◆ Acceleration/deceleration time

- The motor acceleration/deceleration time is decided by the torque generated by the motor, load torque, and moment of inertia (J) of load.
- The required time may increase when the torque limit function or stall prevention function operates during acceleration/deceleration. In such a case, set the acceleration/decelerations time longer.
- To shorten the acceleration/deceleration time, increase the torque boost value (too large setting value may activate the stall prevention function, resulting in longer acceleration time at starting on the contrary). Alternatively, use Advanced magnetic flux vector control, Real sensorless vector control, or vector control, or select the larger inverter and motor capacities. To shorten the deceleration time, use an addition brake unit (FR-BU2) to absorb braking energy, power regeneration common converter (FR-CV), or power supply regeneration unit (MT-RC), etc.

◆ Power transfer mechanisms (reduction gear, belt, chain, etc.)

- Caution is required for the low-speed continuous operation of the motor with an oil lubricated gear box, transmission, reduction gear, etc. in the power transfer mechanism. Such an operation may degrade the oil lubrication and cause seizing. On the other hand, the high-speed operation at more than 60 Hz may cause problems with the noise of the power transfer mechanism, life, or insufficient strength due to centrifugal force, etc. Fully take necessary precautions.

◆ Instructions for overload operation

- When performing frequent starts/stops by the inverter, rise/fall in the temperature of the transistor element of the inverter will repeat due to a repeated flow of large current, shortening the life from thermal fatigue. Since thermal fatigue is related to the amount of current, the life can be increased by reducing current at locked condition, starting current, etc. Reducing current may extend the service life but may also cause torque shortage, which leads to a start failure. Adding a margin to the current can eliminate such a condition. For an induction motor, use an inverter of a higher capacity (up to two ranks for the ND rating). For an IPM motor, use an inverter and IPM motor of higher capacities.

Precautions on peripheral device selection

Selection and installation of molded case circuit breaker

Install a molded case circuit breaker (MCCB) on the power receiving side to protect the wiring at the inverter/the converter unit input side. Select an MCCB according to the inverter power supply side power factor, which depends on the power supply voltage, output frequency and load. Refer to **page 215**. Especially for a completely electromagnetic MCCB, a slightly large capacity must be selected since its operation characteristic varies with harmonic currents. (Check the reference material of the applicable breaker.) As an earth leakage circuit breaker, use the Mitsubishi Electric earth leakage circuit breaker designed for harmonics and surge suppression. (Refer to **page 214**.)
When installing a molded case circuit breaker on the inverter output side, contact the manufacturer of each product for selection.

Handling of the input side magnetic contactor (MC)

For the operation using external terminals (using terminal STF or STR), install the input-side magnetic contactor to prevent accidents due to automatic restart when the power is restored after power failures such as an instantaneous power failure, or for safety during maintenance works. Do not use this magnetic contactor for frequent starting/stopping of the inverter. (The switching life of the converter part is about 1 million times.) In the operation by parameter unit, the automatic restart after power restoration is not performed and the magnetic contactor cannot be used to start the motor. The input-side magnetic contactor can stop the motor. However, the regenerative brake of the inverter does not operate, and the motor coasts to a stop.

Handling of the output side magnetic contactor (MC)

- Switch the MC between the inverter and motor only when both the inverter and motor are at a stop. When the magnetic contactor is turned ON while the inverter is operating, overcurrent protection of the inverter and such will activate. When an MC is provided to switch to a commercial power supply, for example, it is recommended to use the commercial power supply-inverter switchover function **Pr.135 to Pr.139**.
- Do not install a magnetic contactor at the inverter's output side when using a PM motor.

Installation of thermal relay

In order to protect the motor from overheating, the inverter has an electronic thermal O/L relay. However, install an external thermal overcurrent relay (OCR) between the inverter and motors to operate several motors or a multi-pole motor with one inverter. In this case, set 0 A to the electronic thermal O/L relay setting of the inverter. For the external thermal overcurrent relay, determine the setting value in consideration of the current indicated on the motor's rating plate and the line-to-line leakage current. **(Refer to page 221.)**
Self cooling ability of a motor reduces in the low-speed operation. Installation of a thermal protector or a use of a motor with built-in thermistor is recommended.

Output side measuring instrument

When the inverter-to-motor wiring length is long, especially for the 400 V class, small-capacity models, the meters and CTs may generate heat due to line-to-line leakage current. Therefore, choose the equipment which has enough allowance for the current rating.
When measuring and displaying the output voltage and output current of the inverter, use of terminals AM and 5 output function of the inverter is recommended.

Disuse of power factor improving capacitor (power factor correction capacitor)

The power factor improving capacitor and surge suppressor on the inverter output side may be overheated or damaged by the harmonic components of the inverter output. Also, since an excessive current flows in the inverter to activate overcurrent protection, do not provide a capacitor and surge suppressor. To improve the power factor, use an AC reactor (on **page 191**), a DC reactor (on **page 192**), or a high power factor converter (on **page 204**).

Connection between the converter unit and the inverter

- Perform wiring so that the commands sent from the converter unit are transmitted to the inverter without fail. Incorrect connection may damage the converter unit and the inverter.
- For the wiring length, refer to the table below.

Total wiring length	**Across terminals P and P and terminals N and N**	50 m or lower
	Other signal cables	30 m or lower

- For the cable gauge of the cable across the main circuit terminals P/+ and N/- (P and P, N and N), refer to **page 216**.

Electrical corrosion of the bearing

When a motor is driven by the inverter, axial voltage is generated on the motor shaft, which may cause electrical corrosion of the bearing in rare cases depending on the wiring, load, operating conditions of the motor or specific inverter settings (high carrier frequency and EMC filter ON).
Contact your sales representative to take appropriate countermeasures for the motor.
The following shows examples of countermeasures for the inverter.

- Decrease the carrier frequency.
- Turn OFF the EMC filter.
- Provide a common mode choke on the output side of the inverter.*1
  (This is effective regardless of the EMC filter ON/OFF connector setting.)

*1 Recommended common mode choke: FT-3KM F series
FINEMET® common mode choke cores manufactured by Hitachi Metals, Ltd.
FINEMET is a registered trademark of Hitachi Metals, Ltd.

◆ Cable gauge and wiring distance

If the wiring distance is long between the inverter and motor, during the output of a low frequency in particular, use a large cable gauge for the main circuit cable to suppress the voltage drop to 2% or less. (The table on **page 215** indicates a selection example for the wiring length of 20 m.)
Especially for long-distance wiring or wiring with shielded cables, the inverter may be affected by a charging current caused by stray capacitances of the wiring, leading to an incorrect activation of the overcurrent protective function. Refer to the maximum wiring length shown in the following table.
When multiple motors are connected, use the total wiring length shown in the table or shorter (100 m or shorter under vector control and PM sensorless vector control.)

Pr.72 setting (carrier frequency)	FR-A820-00046(0.4K), FR-A840-00023(0.4K)	FR-A820-00077(0.75K), FR-A840-00038(0.75K)	FR-A820-00105(1.5K) or higher, FR-A840-00052(1.5K) or higher
2 (2 kHz) or lower	300 m	500 m	500 m
3 (3 kHz) or higher	200 m	300 m	500 m

When the operation panel is installed away from the inverter and when the parameter unit is connected, use a recommended connection cable.
For the remote operation using analog signals, keep the control cable distance between the operation signal transmitter and the inverter to 30 m or less. Also, to prevent induction from other devices, keep the wiring away from the power circuits (main circuit and relay sequential circuit).
When the frequency setting is performed using the external potentiometer, not using the parameter unit, use a shielded or twisted cable as shown in the figure below. Connect the shield cable to terminal 5, not to the earth (ground).

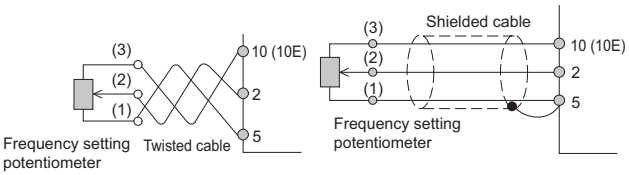

◆ Earth (ground)

When the inverter is set for the low acoustic noise operation, the leakage current increases compared to in the normal operation due to the high speed switching operation. Always earth (ground) the inverter, the converter unit, and the motor. Also, always use the earth (ground) terminal of the inverter/the converter unit for earthing (grounding). (Do not use a case or chassis.)

◆ Electromagnetic interference (EMI)

For the low acoustic noise operation with high carrier frequency, electromagnetic noise tends to increase. Take countermeasures by referring to the following examples. Depending on an installation condition, noise may affect the inverter also in the normal operation (initial status).

- Decrease the carrier frequency (**Pr.72**) setting to lower the EMI level.
- For countermeasures against the noise in AM radio broadcasting or malfunction of sensors, turn ON the EMC filter. (For the switching method, refer to the Instruction Manual.)
- For effective reduction of induction noise from the power cable of the inverter/the converter unit, secure the distance of 30 cm (at least 10 cm) from the power line and use a shielded twisted pair cable for the signal cable. Do not earth (ground) the shield, and connect the shield to a common terminal by itself.

EMI measure example

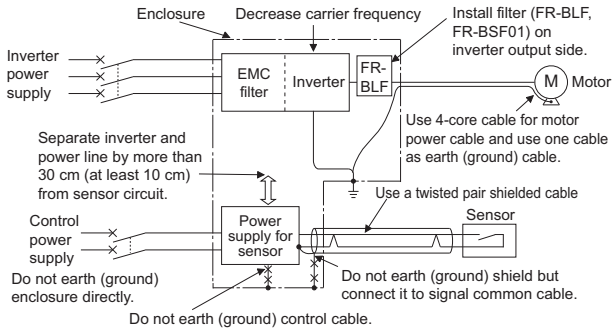

◆ leakage current

Capacitances exist between the inverter/the converter unit I/O cables and other cables or the earth, and within the motor, through which a leakage current flows. Since its value depends on the static capacitances, carrier frequency, etc., low acoustic noise operation at the increased carrier frequency of the inverter will increase the leakage current. Therefore, take the following countermeasures. Select the earth leakage circuit breaker according to its rated sensitivity current, independently of the carrier frequency setting.

◆ To-earth (ground) leakage currents

Type	Influence and countermeasure
Influence and countermeasure	• Leakage currents may flow not only into the inverter/the converter unit's own line but also into the other lines through the earthing (grounding) cable, etc. These leakage currents may operate earth leakage circuit breakers and earth leakage relays unnecessarily. Countermeasure • If the carrier frequency setting is high, decrease the **Pr.72 PWM frequency selection** setting. However, the motor noise increases. Selecting **Pr.240 Soft-PWM operation selection** makes the sound inoffensive. • By using earth leakage circuit breakers designed for harmonic and surge suppression in the inverter's own line and other line, operation can be performed with the carrier frequency kept high (with low noise).
Transmission path	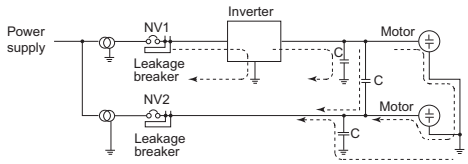

◆ Line-to-line leakage current

Type	Influence and countermeasure
Influence and countermeasure	• Line-to-line leakage current flows through the capacitance between the inverter/the converter unit output lines. • Harmonic component of the leaked current may cause unnecessary operation of an external thermal relay. Long wiring length (50 m or longer) for the 400V class small capacity models (7.5 kW or lower) will increase the rate of leakage current against the rated motor current. In such a case, an unnecessary operation of the external thermal relay may be more liable to occur. Countermeasure • Use **Pr.9 Electronic thermal O/L relay**. • If the carrier frequency setting is high, decrease the **Pr.72 PWM frequency selection** setting. However, the motor noise increases. Selecting **Pr.240 Soft-PWM operation selection** makes the sound inoffensive. To protect motor securely without being subject to the influence of the line-to-line leakage current, direct detection of the motor temperature using a temperature sensor is recommended.
Transmission path	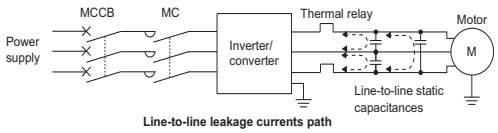

◆ Harmonic Suppression Guidelines

Inverters have a converter section (rectifier circuit) and generate a harmonic current.
Harmonic currents flow from the inverter to a power receiving point via a power transformer. The Harmonic Suppression Guidelines was established to protect other consumers from these outgoing harmonic currents.
The three-phase 200 V input specifications 3.7 kW or lower were previously covered by the "Harmonic Suppression Guidelines for Household Appliances and General-purpose Products" and other models were covered by the "Harmonic Suppression Guidelines for Consumers Who Receive High Voltage or Special High Voltage". However, the general-purpose inverter has been excluded from the target products covered by the "Harmonic Suppression Guidelines for Household Appliances and General-purpose Products" in January 2004 and the "Harmonic Suppression Guideline for Household Appliances and General-purpose Products" was repealed on September 6, 2004.
All capacity and all models of general-purpose inverter used by specific consumers are now covered by the "Harmonic Suppression Guidelines for Consumers Who Receive High Voltage or Special High Voltage".

- "Harmonic Suppression Guidelines for Consumers Who Receive High Voltage or Special High Voltage"
  This guideline sets the maximum values of outgoing harmonic currents generated from a high-voltage or specially high-voltage receiving consumer who will install, add or renew harmonic generating equipment. If any of the maximum values is exceeded, this guideline requires that consumer to take certain suppression measures.

The users who are not subjected to the above guidelines do not need follow the guidelines, but the users are recommended to connect a DC reactor and an AC reactor as usual.
Compliance with the "Harmonic Suppression Guidelines for Consumers Who Receive High Voltage or Special High Voltage"

Input power	Target capacity	Countermeasure
Three-phase 200 V Three-phase 400 V	All capacities	Confirm the compliance with the "Harmonic Suppression Guidelines for Consumers Who Receive High Voltage or Special High Voltage" published in September 1994 by the Ministry of International Trade and Industry (the present Japanese Ministry of Economy, Trade and Industry). Take countermeasures if required. Use the following materials as reference to calculate the power supply harmonics. Reference materials • "Harmonic Suppression Measures of the General-purpose Inverter" January 2004, Japan Electrical Manufacturers' Association • "Calculation Method of Harmonic Current of the General-purpose Inverter Used by Specific Consumers" JEM-TR201 (Revised in December 2003), Japan Electrical Manufacturers' Association

For compliance to the "Harmonic Suppression Guideline of the General-purpose Inverter (Input Current of 20A or Less) for Consumers Other Than Specific Consumers" published by JEMA

Input power	Target capacity	Measures
Three-phase 200 V	3.7 kW or lower	Connect the AC reactor or DC reactor recommended in the Catalogs and Instruction Manuals. Reference materials • "Harmonic Suppression Guideline of the General-purpose Inverter (Input Current of 20A or Less)" JEM-TR226 (Published in December 2003), Japan Electrical Manufacturers' Association

◆ Calculation of outgoing harmonic current

Outgoing harmonic current = fundamental wave current (value converted from received power voltage) × operation ratio × harmonic content

- Operation ratio: Operation ratio = actual load factor × operation time ratio during 30 minutes
- Harmonic content: Found in the table below.

- Harmonic contents (values when the fundamental wave current is 100%)

Reactor	5th	7th	11th	13th	17th	19th	23rd	25th
Not used	65	41	8.5	7.7	4.3	3.1	2.6	1.8
Used (AC side)	38	14.5	7.4	3.4	3.2	1.9	1.7	1.3
Used (DC side)	30	13	8.4	5.0	4.7	3.2	3.0	2.2
Used (AC, DC sides)	28	9.1	7.2	4.1	3.2	2.4	1.6	1.4

- Rated capacities and outgoing harmonic currents when driven by inverter

Applied motor (kW)	Fundamental wave current (A)		Fundamental wave current converted from 6.6 kV (mA)	Rated capacity (kVA)	Outgoing harmonic current converted from 6.6 kV (mA) (No reactor, 100% operation ratio)							
	200 V	400 V			5th	7th	11th	13th	17th	19th	23rd	25th
0.4	1.61	0.81	49	0.57	31.85	20.09	4.165	3.773	2.107	1.519	1.274	0.882
0.75	2.74	1.37	83	0.97	53.95	34.03	7.055	6.391	3.569	2.573	2.158	1.494
1.5	5.50	2.75	167	1.95	108.6	68.47	14.20	12.86	7.181	5.177	4.342	3.006
2.2	7.93	3.96	240	2.81	156.0	98.40	20.40	18.48	10.32	7.440	6.240	4.320
3.7	13.0	6.50	394	4.61	257.1	161.5	33.49	30.34	16.94	12.21	10.24	7.092
5.5	19.1	9.55	579	6.77	376.1	237.4	49.22	44.58	24.90	17.95	15.05	10.42
7.5	25.6	12.8	776	9.07	504.4	318.2	65.96	59.75	33.37	24.06	20.18	13.97
11	36.9	18.5	1121	13.1	728.7	459.6	95.29	86.32	48.20	34.75	29.15	20.18
15	49.8	24.9	1509	17.6	980.9	618.7	128.3	116.2	64.89	46.78	39.24	27.16
18.5	61.4	30.7	1860	21.8	1209	762.6	158.1	143.2	79.98	57.66	48.36	33.48
22	73.1	36.6	2220	25.9	1443	910.2	188.7	170.9	95.46	68.82	57.72	39.96
30	98.0	49.0	2970	34.7	1931	1218	252.5	228.7	127.7	92.07	77.22	53.46
37	121	60.4	3660	42.8	2379	1501	311.1	281.8	157.4	113.5	95.16	65.88
45	147	73.5	4450	52.1	2893	1825	378.3	342.7	191.4	138.0	115.7	80.10
55	180	89.9	5450	63.7	3543	2235	463.3	419.7	234.4	169.0	141.7	98.10

Applied motor (kW)	Fundamental wave current (A)		Fundamental wave current converted from 6.6 kV (mA)	Rated capacity (kVA)	Outgoing harmonic current converted from 6.6 kV (mA) (With a DC reactor, 100% operation ratio)							
	200 V	400 V			5th	7th	11th	13th	17th	19th	23rd	25th
75	245	123	7455	87.2	2237	969	626	373	350	239	224	164
90	293	147	8909	104	2673	1158	748	445	419	285	267	196
110	357	179	10848	127	3254	1410	911	542	510	347	325	239
132	-	216	13091	153	3927	1702	1100	655	615	419	393	288
160	-	258	15636	183	4691	2033	1313	782	735	500	469	344
220	-	355	21515	252	6455	2797	1807	1076	1011	688	645	473
250	-	403	24424	286	7327	3175	2052	1221	1148	782	733	537
280	-	450	27273	319	8182	3545	2291	1364	1282	873	818	600
315	-	506	30667	359	9200	3987	2576	1533	1441	981	920	675
355	-	571	34606	405	10382	4499	2907	1730	1627	1107	1038	761
400	-	643	38970	456	11691	5066	3274	1949	1832	1247	1169	857
450	-	723	43818	512	13146	5696	3681	2191	2060	1402	1315	964
500	-	804	48727	570	14618	6335	4093	2436	2290	1559	1462	1072
560	-	900	54545	638	16364	7091	4582	2727	2564	1746	1636	1200
630	-	1013	61394	718	18418	7981	5157	3070	2886	1965	1842	1351

- Conversion factors

Classification	Circuit type		Conversion coefficient Ki
3	Three-phase bridge (Capacitor smoothing)	Without reactor	K31 = 3.4
		With reactor (AC side)	K32 = 1.8
		With reactor (DC side)	K33 = 1.8
		With reactors (AC, DC sides)	K34 = 1.4
5	Self-excitation three-phase bridge	When a high power factor converter is used	K5 = 0

● List of applicable inverter models by rating (motor capacity → inverter model)

For the combinations within the thick boarders, always connect a DC reactor (FR-HEL), which is available as an option.

◆ 200 V class (model: FR-A820-[])

Motor capacity (kW)*1	DC reactor	SLD (superlight load)			LD (light load)			ND (normal load, initial value)			HD (heavy load)		
	FR-HEL-[]	Model		Rated current (A)	Model		Rated current (A)	Model		Rated current (A)	Model		Rated current (A)
0.2	0.4K*2	0.4K	00046	4.6	0.4K	00046	4.2	0.4K	00046	3	0.4K	00046	1.5
0.4	0.4K										0.75K	00077	3
0.75	0.75K							0.75K	00077	5	1.5K	00105	5
1.5	1.5K	0.75K	00077	7.7	0.75K	00077	7	1.5K	00105	8	2.2K	00167	8
2.2	2.2K	1.5K	00105	10.5	1.5K	00105	9.6	2.2K	00167	11	3.7K	00250	11
3.7	3.7K	2.2K	00167	16.7	2.2K	00167	15.2	3.7K	00250	17.5	5.5K	00340	17.5
5.5	5.5K	3.7K	00250	25	3.7K	00250	23	5.5K	00340	24	7.5K	00490	24
7.5	7.5K	5.5K	00340	34	5.5K	00340	31	7.5K	00490	33	11K	00630	33
11	11K	7.5K	00490	49	7.5K	00490	45	11K	00630	46	15K	00770	46
15	15K	11K	00630	63	11K	00630	58	15K	00770	61	18.5K	00930	61
18.5	18.5K	15K	00770	77	15K	00770	70.5	18.5K	00930	76	22K	01250	76
22	22K	18.5K	00930	93	18.5K	00930	85	22K	01250	90	30K	01540	90
30	30K	22K	01250	125	22K	01250	114	30K	01540	115	37K	01870	115
37	37K	30K	01540	154	30K	01540	140	37K	01870	145	45K	02330	145
45	45K	37K	01870	187	37K	01870	170	45K	02330	175	55K	03160	175
55	55K	45K	02330	233	45K	02330	212	55K	03160	215	75K	03800	215
75	75K	55K	03160	316	55K	03160	288	75K	03800	288	90K	04750	288
90	90K	75K	03800	380	75K	03800	346	90K	04750	346	-	-	-
110	110K				90K	04750	432	-	-	-	-	-	-
132	110K*3	90K	04750	475	-	-	-	-	-	-	-	-	-

◆ 400 V class (model: FR-A840-[])

Motor capacity (kW)*1	DC reactor	SLD (superlight load)			LD (light load)			ND (normal load, initial value)			HD (heavy load)		
	FR-HEL-[]	Model		Rated current (A)	Model		Rated current (A)	Model		Rated current (A)	Model		Rated current (A)
0.2	H0.4K*2	0.4K	00023	2.3	0.4K	00023	2.1	0.4K	00023	1.5	0.4K	00023	0.8
0.4	H0.4K										0.75K	00038	1.5
0.75	H0.75K							0.75K	00038	2.5	1.5K	00052	2.5
1.5	H1.5K	0.75K	00038	3.8	0.75K	00038	3.5	1.5K	00052	4	2.2K	00083	4
2.2	H2.2K	1.5K	00052	5.2	1.5K	00052	4.8	2.2K	00083	6	3.7K	00126	6
3.7	H3.7K	2.2K	00083	8.3	2.2K	00083	7.6	3.7K	00126	9	5.5K	00170	9
5.5	H5.5K	3.7K	00126	12.6	3.7K	00126	11.5	5.5K	00170	12	7.5K	00250	12
7.5	H7.5K	5.5K	00170	17	5.5K	00170	16	7.5K	00250	17	11K	00310	17
11	H11K	7.5K	00250	25	7.5K	00250	23	11K	00310	23	15K	00380	23
15	H15K	11K	00310	31	11K	00310	29	15K	00380	31	18.5K	00470	31
18.5	H18.5K	15K	00380	38	15K	00380	35	18.5K	00470	38	22K	00620	38
22	H22K	18.5K	00470	47	18.5K	00470	43	22K	00620	44	30K	00770	44
30	H30K	22K	00620	62	22K	00620	57	30K	00770	57	37K	00930	57
37	H37K	30K	00770	77	30K	00770	70	37K	00930	71	45K	01160	71
45	H45K	37K	00930	93	37K	00930	85	45K	01160	86	55K	01800	86
55	H55K	45K	01160	116	45K	01160	106	55K	01800	110	75K	02160	110
75	H75K	55K	01800	180	55K	01800	144	75K	02160	144	90K	02600	144
90	H90K				75K	02160	180	90K	02600	180	110K	03250	180
110	H110K	75K	02160	216	90K	02600	216	110K	03250	216	132K	03610	216
132	H132K	90K	02600	260	110K	03250	260	132K	03610	260	160K	04320	260
160	H160K	110K	03250	325	132K	03610	325	160K	04320	325	185K	04810	325
185	H185K	132K	03610	361	160K	04320	361	185K	04810	361	220K	05470	361
220	H220K	160K	04320	432	185K	04810	432	220K	05470	432	250K	06100	432
250	H250K	185K	04810	481	220K	05470	481	250K	06100	481	280K	06830	481
280	H280K	220K	05470	547	250K	06100	547	280K	06830	547	-	-	-
315	H315K	250K	06100	610	280K	06830	610	-	-	-	-	-	-
355	H355K	280K	06830	683	-	-	-	-	-	-	-	-	-

◆ 400 V class (model: FR-A842-[])

Motor capacity (kW)*1	Converter unit	SLD (superlight load)			LD (light load)			ND (normal load, initial value)			HD (heavy load)		
	FR-CC2-[]	Model		Rated current (A)	Model		Rated current (A)	Model		Rated current (A)	Model		Rated current (A)
280	H315K	-	-	-	-	-	-	-	-	-	315K	07700	547
315	H315K	-	-	-	-	-	-	315K	07700	610	355K	08660	610
355	H355K	-	-	-	315K	07700	683	355K	08660	683	400K	09620	683
400	H400K	315K	07700	770	355K	08660	770	400K	09620	770	450K	10940	770
450	H450K	355K	08660	866	400K	09620	866	450K	10940	866	500K	12120	866
500	H500K	400K	09620	962	450K	10940	962	500K	12120	962	-	-	-
560	H560K	450K	10940	1094	500K	12120	1094	-	-	-	-	-	-
630	H630K	500K	12120	1212	-	-	-	-	-	-	-	-	-

*1 Indicates the maximum capacity applicable with the Mitsubishi Electric 4-pole standard motor.
*2 The power factor may be slightly lower.
*3 The FR-HEL-110K supports the 200 V class 132 kW motor.

◆ Overload current rating

SLD	110% 60 s, 120% 3 s (inverse-time characteristics) at surrounding air temperature of 40°C
LD	120% 60 s, 150% 3 s (inverse-time characteristics) at surrounding air temperature of 50°C
ND	150% 60 s, 200% 3 s (inverse-time characteristics) at surrounding air temperature of 50°C
HD	200% 60 s, 250% 3 s (inverse-time characteristics) at surrounding air temperature of 50°C

● High-performance energy-saving motor superline premium series SF-PR

We have released the superline premium series SF-PR models compatible with the Top Runner Standard in Japan, which is equivalent with IE3 premium efficiency for three-phase motors, and with the Energy Independence and Security Act (EISA) in the United States.
The SF-PR has achieved the efficiency class IE3 with the same dimensions as those of conventional models using our unique technology of the steel plate frame and new core materials.
It maintains interchangeability with our standard efficiency motor SF-JR and easy replacement becomes possible.
By adopting a high-efficiency motor, energy savings in plant facilities and reduction of electricity consumption are expected, as well as the effects of recovering the investment cost.

◆ One motor conforms to the power supply in Japan and the United States.

- The SF-PR series conform to the Top Runner Standard of the "Act on the Rational Use of Energy (energy saving law)" started on April 1, 2015.
- The 230 V 60 Hz motor also conforms to the Energy Independence and Security Act (EISA).

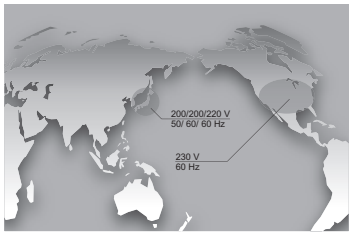

200	200	220	230	V
50	60	60	60	Hz
In Japan		In the United States		

∗ For the 200 V class

◆ Interchangeable installation size

- Replacement can be smoothly performed because the installation size (frame number) is compatible with our standard efficiency motor SF-JR series.
- It is possible to use a power distribution control equipment (thermal relay and breaker), which is the same as a conventional model.

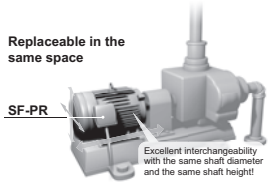

∗1 For the frame number 180 LD or higher and some models of the 6-pole product, the total length or diametrical dimension is greatly different.
∗2 The frame number is different from 1.5 kW6P (112M), 2.2 kW6P(132S) of the SF-HR models.
∗3 When replacing the SF-JR to the SF-PR, it is required to consider upgrading the contactor to secure the same electric durability as using the SF-JR because the electric durability of the contactor may reduce by about 30%. Besides, when replacing the SF-JR to the SF-PR, the existing thermal relay may trip depending on the operating conditions (long starting time). As a countermeasure, consider "Adjusting the heater set value of the thermal" or "Adopting the thermal with a saturated reactor ", etc.
∗4 If the breaker NF400-SW manufactured by Mitsubishi Electric is used with the 55 kW motor, change the breaker. (Change the rated current of the breaker NF400-SW from 300 A to 350 A.)

◆ Introduction effects of the superline premium series SF-PR

The SF-PR motor conforms to the Top Runner Standard (IE3 equivalent), which remarkably reduces its operation cost (electricity charges) and greatly contributes minimization of TCO (Total Cost Ownership).

- Trial calculation example of an annual saved sum of money (at upgrading the motor from energy-efficiency class IE1 to IE3) Motor with 4-poles 200 V50 Hz

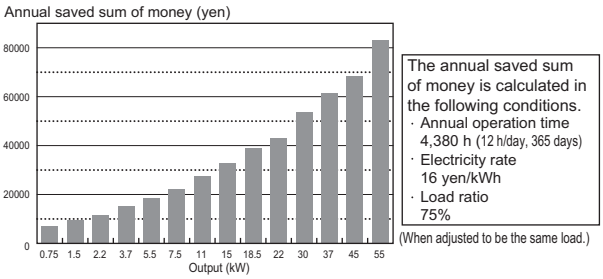

- Economic efficiency on an energy saving effect

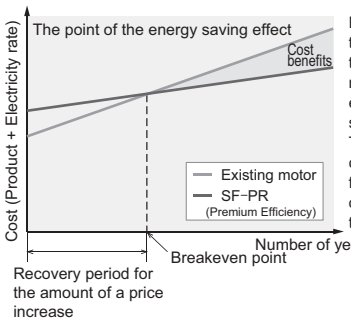

Reduction in the electricity charges through the energy saving enables the investment cost to be recovered, and after that, the energy saving effect will bring some profit through power saving. The annual saved sum of money can be calculated according to the following formula. The longer operation time in an application, the more money can be saved.

<Calculation formula>

$$\text{Output (kW)} \times \left(\frac{100}{\text{Efficiency of current motor (\%)}} - \frac{100}{\text{Efficiency of SF-PR model (\%)}} \right) \times \text{Number of motors} \times \text{Number of hours of use (h/day)} \times \text{Number of days of operation (day/year)} \times \text{Electricity rate (yen/kWh)}$$

When replacing our standard motor SF-JR with the SF-PR on the ventilation fan in plant

<Condition>
Type : 11 kW 4P 200 V 50 Hz 75% load
Units : 10 units
Operation time : 12 h/day 365 day/year
Electricity rate: 16 yen/kWh

Reduced cost of about 350,000 yen per year

Trial calculation results in replacing the SF-JR with the SF-PR with improved efficiency by 5% under the same conditions of the load factor, operation time, and electricity charges, etc.

◆ Lineup

●Model

S F - P R V O B - K R

Symbol	Structure
S	Superline series

Symbol	Enclosure type
F	Totally enclosed fan-cooled

Symbol	Series
PR	Premium series Steel plate frame

Symbol	Installation
None	Foot mounting type
V	Vertical type
F	Flange type

Symbol	Classification
None	Indoor type (IP44)
O	Outdoor type (IP44)
P	Dust-proof and waterproof type(IP55)

Symbol	With or without brake
None	Without brake
B	With brake

Symbol	Country code
None	Japan and the U.S.A.
UL	US UL standard
KR	Korea
EU	Europe
CN	China

●Available models

Type		Totally-enclosed fan-cooled type														
		Foot mounting type			Vertical type			Flange type			Outdoor type			Dustproof/waterproof type		
Model		SF-PR			SF-PRV			SF-PRF			SF-PRO			SF-PRP		
Number of poles		2P	4P	6P	2P	4P	6P	2P	4P	6P	2P	4P	6P	2P	4P	6P
Output (kW)	0.75	•	•	•	•	•	•	•	•	•	•	•	•	•	•	•
	1.5	•	•	•	•	•	•	•	•	•	•	•	•	•	•	•
	2.2	•	•	•	•	•	•	•	•	•	•	•	•	•	•	•
	3.7	•	•	•	•	•	•	•	•	•	•	•	•	•	•	•
	5.5	•	•	•	•	•	•	•	•	•	•	•	•	•	•	•
	7.5	•	•	•	•	•	•	•	•	•	•	•	•	•	•	•
	11	•	•	•	•	•	•	•	•	•	•	•	•	•	•	•
	15	•	•	•	•	•	•	•	•	•	•	•	•	•	•	•
	18.5	•	•	•	•	•	•	•	•	•	•	•	•	•	•	•
	22	•	•	•	•	•	•	•	•	•	•	•	•	•	•	•
	30	•	•	•	•	•	•	•	•	•	•	•	•	•	•	•
	37	•	•	•	•	•	•	•	•	•	•	•	•	•	•	•
	45	•	•	•	•	•	•	•	•	–	•	•	•	•	•	•
	55	•	•	–	•	•	–	–	–	–	•	•	–	•	•	–

•: Available model

• The vertical type and the flange type are also available for the outdoor type and the dustproof/waterproof type.

● The SF-PR best matches Mitsubishi Electric inverters

◆ This enables a constant-torque operation in the low-speed range. (expanding the constant-torque range)

- Combining with the standard motor SF-PR enables a constant-torque operation in the low-speed range.
- The SF-PR has superior performance to the SF-HRCA.
- The 400 V class motors are insulation-enhanced motors as standard.

◆ Combination with Advanced magnetic flux vector control

- Enables a constant-torque operation down to 0.5 Hz in a super low-speed range.
  Expanding the constant-torque continuous operation range enables 0.5 to 60 Hz (1: 120) operation.

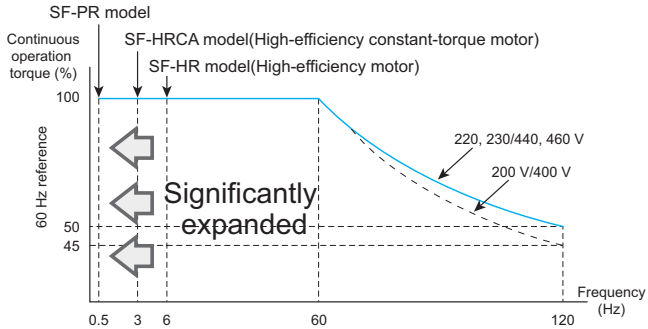

◆ Combination with V/F control

- Enables a constant-torque operation down to 6 Hz in a low-speed range.
  Expanding the constant-torque continuous operation range enables 6 to 60 Hz (1: 10) operation.

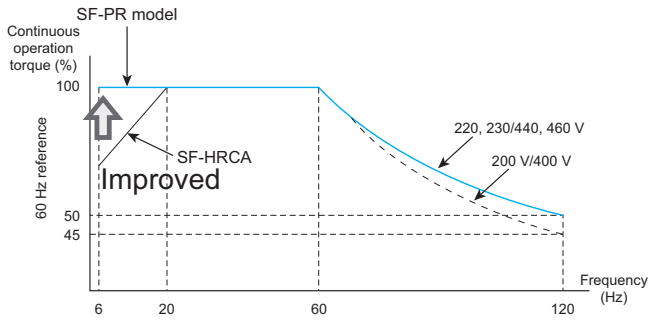

60 Hz torque reference indicates that the rated motor torque is 100% during 60 Hz operation.

◆ Motor torque

The following shows torque characteristics of the high-performance, energy-saving motor (SF-PR, 4-pole) in combination with an inverter with the ND or HD rating. The overload capacity decreases for the LD or SLD rating. Observe the specified range of the inverter.

◆ Maximum short-time torque

Real sensorless vector control	V/F control
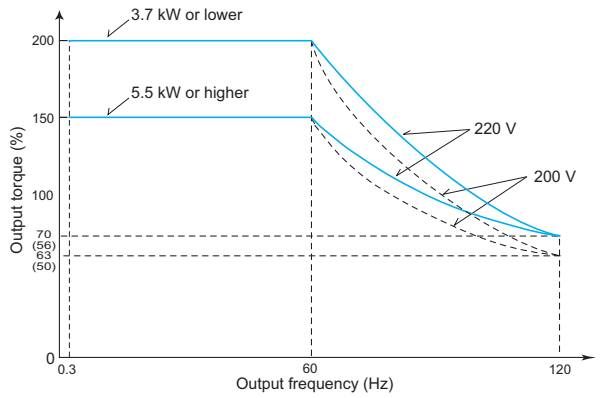	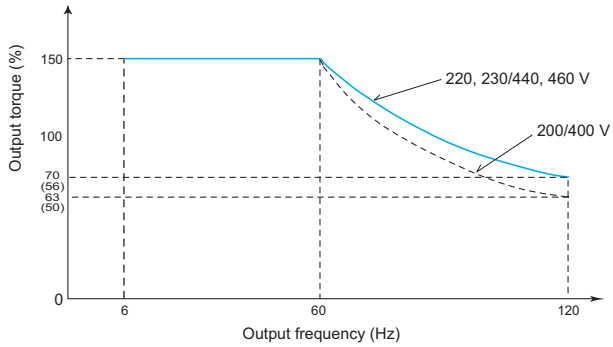

The values in parentheses are applicable to 1.5 kW and 2.2 kW.

The values in parentheses are applicable to 2.2 kW.

◆ Continuous torque

Real sensorless vector control	V/F control
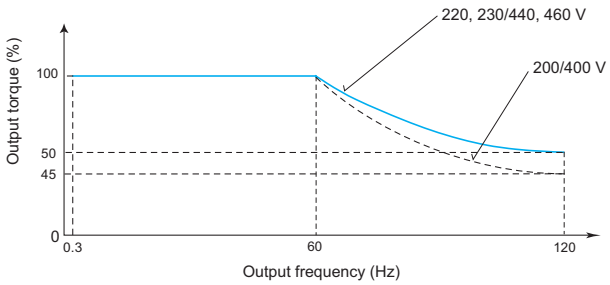	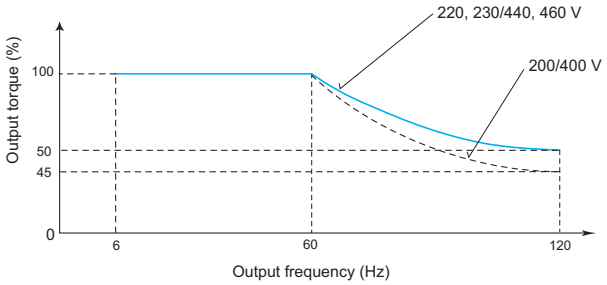

● Mitsubishi Electric high-performance energy-saving motor with encoder superline premium series SF-PR-SC

◆ Fast-response / high-accuracy vector control

Fast-response and high-accuracy vector control can be performed by the use in combination with the general-purpose FR-A800 inverter, plug-in option (FR-A8AP/A8AL), and control terminal option (FR-A8TP).

◆ Wide range of constant-torque characteristics

By selecting vector control, constant-torque continuous operation can be performed in the range from 0 Hz to 60 Hz (zero speed control and servo lock are available).

◆ Energy saving / CO_2 emission reduction

The premium efficiency motor with encoder (compatible with IE3) meets the Top Runner Standard in Japan and the Energy Independence and Security Act (EISA) in the United States.

◆ Compatibility with the inverter

The motor is used in combination with an inverter of the same capacity.

◆ Improved environmental resistance

- Environmental resistance was improved due to the change from the fan cooled type to the blower cooled type. The IP55 compatible motor with an encoder is now also available.
- With the wire-saving design, improved reliability can be obtained.
- Anti-corrosive coating (type 3) is also available.

◆ Motor torque

- Excellent speed accuracy
  Speed fluctuation ratio: ±0.01% (for power driving)
- Wide range of speed control
  Speed control range: 1:1800 (for power driving)

◆ Continuous operation torque

Vector control

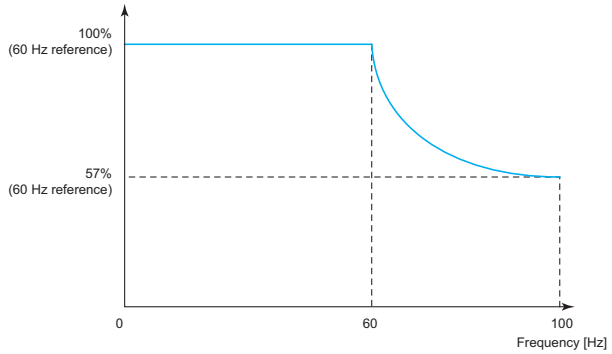

The reference torque differs from that of the SF-V5RU series motor.

◆ Lineup

●Model

S F - P R F O B - S C 7 K 4 P H A

Symbol	Installation method
None	Foot mounting type
F	Flange type

Symbol	Classification
None	Indoor type (IP44)
O	Outdoor type (IP44)
P	Dustproof/waterproof type (IP55)

Symbol	Classification
None	Without brake
B	With brake

Symbol	Output	Symbol	Output
1K	1.5 kW	18K	18.5 kW
2K	2.2 kW	22K	22 kW
3K	3.7 kW	30K	30 kW
5K	5.5 kW	37K	37 kW
7K	7.5 kW	45K	45 kW
11K	11 kW	55K	55 kW
15K	15 kW		

Symbol	Classification
None	200 V class
H	400 V class

Symbol	Protective equipment
None	Without
T	Thermostat
A	Thermistor

● Application to standard motors

◆ Motor loss and temperature rise

The motor operated by the inverter has a limit on the continuous operating torque since it is slightly higher in temperature rise than the one operated by a commercial power supply. At a low speed, reduce the output torque of the motor since the cooling effect decreases. When 100% torque is needed continuously at low speed, consider using a constant-torque motor.

◆ Torque characteristic

The motor operated by the inverter may be less in motor torque (especially starting torque) than the one driven by the commercial power supply. It is necessary to fully check the load torque characteristic of the machine.

◆ Vibration

The machine-installed motor operated by the inverter may be slightly greater in vibration than the one driven by the commercial power supply. The possible causes of vibration are as follows.

- Vibration due to imbalance of the rotator itself including the machine
- Resonance due to the natural oscillation of the mechanical system. Caution is required especially when the machine used at constant speed is operated at variable speed. The frequency jump function allows resonance points to be avoided during operation. (During acceleration/deceleration, the frequency within the setting range is passed through.) An effect is also produced if **Pr.72 PWM frequency selection** is changed. When a two-pole motor is operated at higher than 60 Hz, caution should be taken since such an operation may cause abnormal vibration.

◆ Motor torque

When the Mitsubishi Electric standard squirrel cage motor (SF-JR, 4-pole) and inverter of the same capacity are used, the torque characteristics are as shown below. It is assumed that the motor is used in combination with an inverter with the ND or HD rating. The overload capacity decreases when the LD or SLD rating is selected. Observe the specified range of the inverter.

◆ Maximum short-time torque

	60 Hz torque reference	50 Hz torque reference
Real sensorless vector control	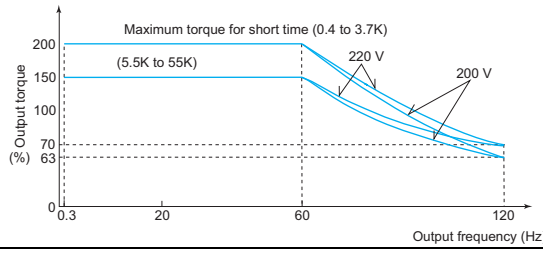	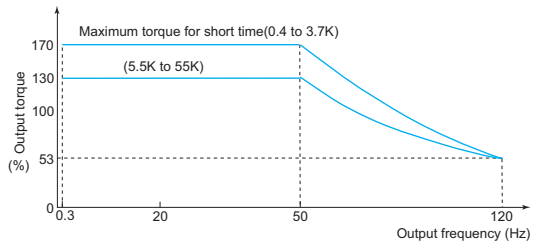
V/F control	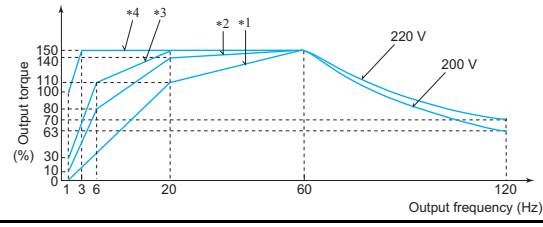	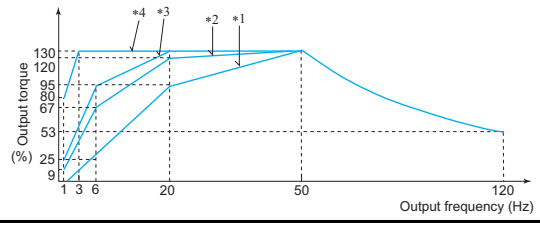

*1 Torque boost minimum (0%)
*2 Torque boost standard (initial value)
*3 Torque boost large
10%: FR-A820-00046(0.4K), FR-A820-00077(0.75K), FR-A840-00023(0.4K), FR-A840-00038(0.75K)
7%: FR-A820-00105(1.5K) to FR-A820-00250(3.7K), FR-A840-00052(1.5K) to FR-A840-00126(3.7K)
6%: FR-A820-00340(5.5K), FR-A820-00490(7.5K), FR-A840-00170(5.5K), FR-A840-00250(7.5K)
4%: FR-A820-00630(11K) or higher, FR-A840-00310(11K) or higher
*4 Torque boost adjustment (3.7 kW or lower)

- The maximum short-time torque indicates the maximum torque characteristics within 60 s.
- Under Real sensorless vector control, 200% (150%) torque (60 Hz torque reference) is output at 0.3 Hz operation.
- A 60 Hz torque reference indicates that the rated torque of the motor running at 60 Hz is 100%, and a 50 Hz torque reference indicates that the rated torque of the motor running at 50 Hz is 100%
- Under V/F control, all of SF-JR 2-pole, 4-pole, and 6-pole motors have the same torque characteristics.

◆ Continuous torque (Real sensorless vector control)

60 Hz torque reference	50 Hz torque reference
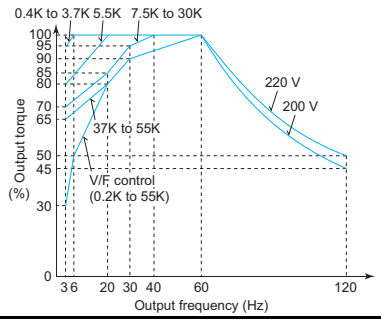	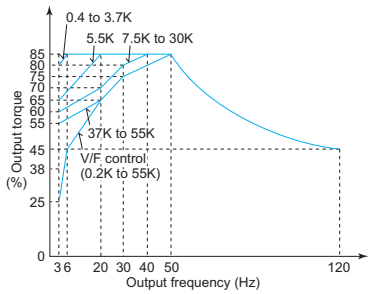

- A general-purpose squirrel cage motor must be used at lower continuous operating torque in rated operation as shown in the chart since the cooling capability of the fan installed on the rotor reduces at a lower speed. (Instantaneous torque occurs.)
- The toque with 200 or 220 V at 60 Hz or 200 V at 50 Hz in the chart indicates a motor torque reference (base frequency set in **Pr.3** of the inverter) and is not the frequency of the power supply. In a 50 Hz power supply area, the 60 Hz setting can be set.
- When continuously operating a motor with the 50 Hz torque reference setting, set the load torque to 85% or lower.

● Application to constant-torque motors

◆ SF-HRCA type

- Continuous operation even at low speed of 0.3 Hz is possible (when using Real sensorless vector control).
  For the 37 kW or lower (except for 22 kW), load torque is not needed to be reduced even at a low speed and constant torque (100% torque) continuous operation is possible within the range of speed ratio 1/20 (3 to 60 Hz).
  (The characteristic of motor running at 60 Hz or higher is that output torque is constant.)
- Installation size is the same as that of the standard motor.
- Note that operation characteristic in the chart below cannot be obtained if V/F control is used.

◆ Standard specifications (indoor type)

Output (kW)	Number of poles	Frequency range	Common specification
0.4	4	3 to 120 Hz	Base frequency 60 Hz • Rotation direction (CCW) Counterclockwise when viewed from the motor end • Lead wire 3.7 kW or lower: 3 wires 5.5 kW or higher: 6 or 12 wires • Surrounding air temperature: 40°C or lower The protective structure is IP44.
0.75			
1.5			
2.2			
3.7			
5.5			
7.5			
11		3 to 100 Hz	
15			
18.5			
22			
30			
37		3 to 65 Hz	
45			
55			

◆ Motor torque

It is assumed that the motor is used in combination with an inverter with the ND or HD rating. The overload capacity decreases when the LD or SLD rating is selected. Observe the specified range of the inverter.

◆ Continuous rated range of use (Real sensorless vector control)

60 Hz torque reference (when the inverter is 0.4 kW to 7.5 kW)

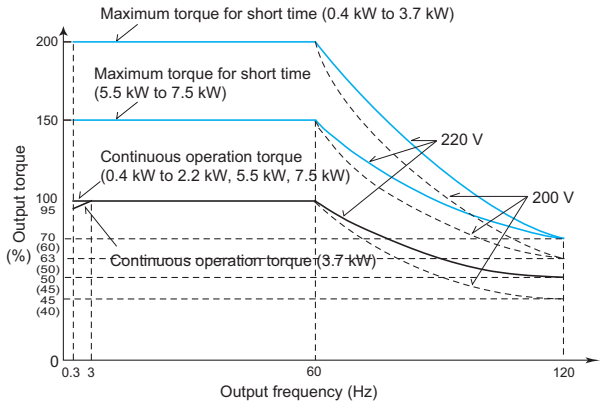

Values in parenthesis apply to the 0.4 kW to 0.75 kW

60 Hz torque reference (when the inverter is 11 kW to 22 kW)

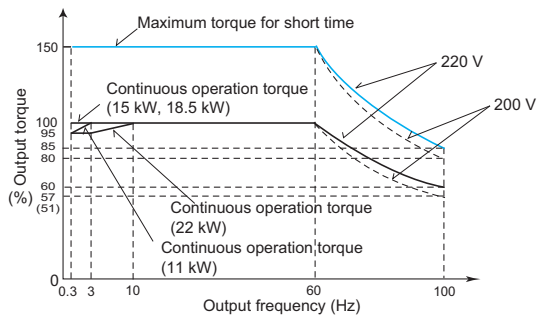

Values in parenthesis apply to the 22 kW

60 Hz torque reference (when the inverter is 30 kW)

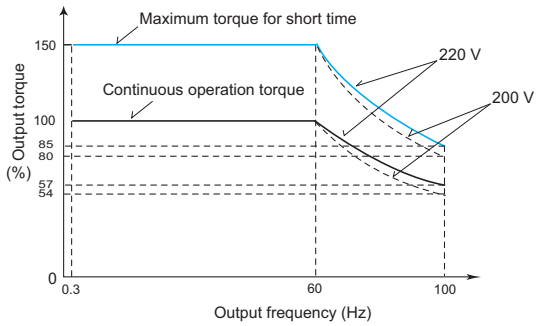

60 Hz torque reference (when the inverter is 37 kW to 55 kW)

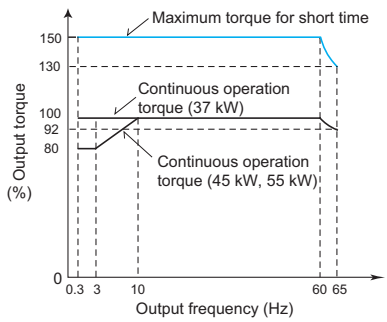

The maximum short-time torque indicates the maximum torque characteristics within 60 s.
For the motor constant under Real sensorless vector control, please contact your sales representative.

● Application to vector control dedicated motors (SF-V5RU) (55 kW or lower)

For performing vector control, the FR-A8AP/FR-A8TP (vector control compatible option) is required.
When the FR-A8TP is not used, a 12 V or 24 V power supply is required as the power supply for the encoder of the SF-V5RU. (When the FR-A8TP is used, the 24 V power supply of the FR-A8TP can be used for the encoder of the SF-V5RU.)

◆ Motor torque

When the vector control dedicated motor (SF-V5RU) and inverter are used, the torque characteristics are as shown below.
It is assumed that the motor is used in combination with an inverter with the ND or HD rating. The overload capacity decreases when the LD or SLD rating is selected. Observe the specified range of the inverter.

- SF-V5RU

Rated speed of 1500 r/min series

<1.5 to 22 (kW)>

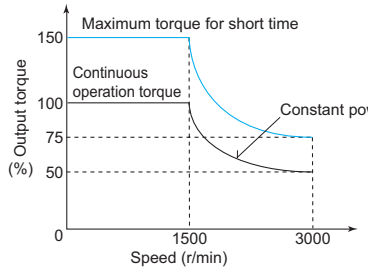

<30 to 55 (kW)>

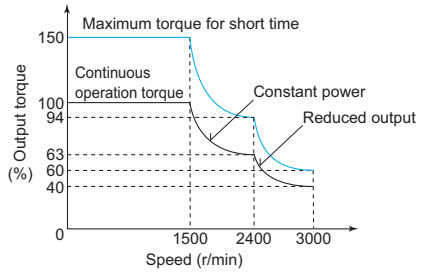

- SF-V5RU1, 3, and 4

1000 r/min torque reference (speed ratio 1:2)

<1.5 to 37 (kW)>

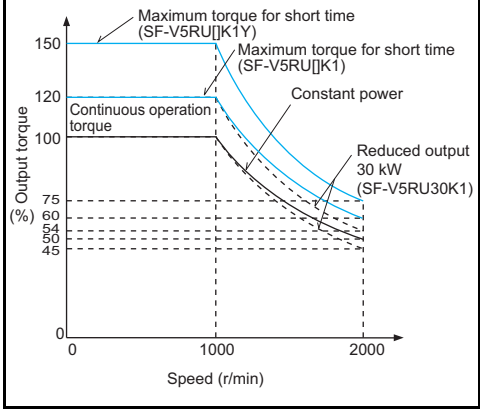

1000 r/min torque reference (speed ratio 1:3)

<1.5 to 30 (kW)>

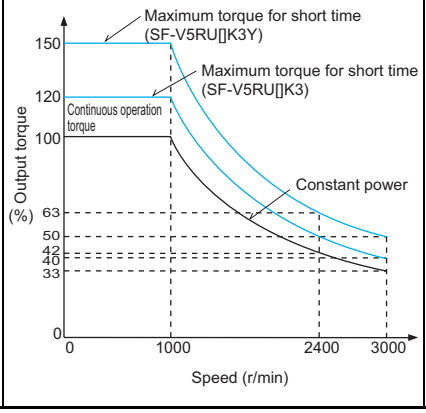

500 r/min torque reference (speed ratio 1:4)

<1.5 to 15 (kW)>

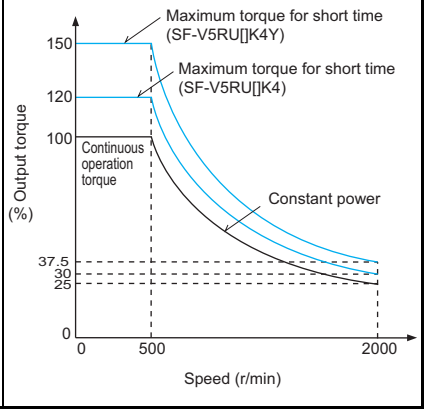

- The maximum rotation speed of the SF-V5RU-55kW and SF-V5RU3-30kW is 2400 r/min.
- The SF-V5RU-3.7kW or lower can be operated with the maximum rotation speed of 3600 r/min. For the use of those motors, please contact your sales representative.
- The maximum rotation speed of motors with a brake is 1800 r/min.
- The maximum short-time torque of the SF-V5RU[]K1, SF-V5RU[]K3, and SF-V5RU[]K4 is 120%.
  As the motor compatible with the maximum short-time torque of 150%, specify the SF-V5RU[]K1Y, SF-V5RU[]K3Y, or SF-V5RU[]K4Y.

◆ Motor model

SF-V5RU [F] [H] [5K] [1] [B] [T] [Y]

Symbol	Structure
None	Horizontal type
F	Flange type

Symbol	Structure
None	200 V class
H	400 V class

Symbol	Output (kW)	Symbol	Output (kW)
1K	1.5	18K	18.5
2K	2.2	22K	22
3K	3.7	30K	30
5K	5.5	37K	37
7K	7.5	45K	45
11K	11	55K	55
15K	15		

Symbol	Rated speed (r/min)	Maximum speed (r/min)
None	1500	3000
1	1000	2000
3	1000	3000
4	500	2000

Symbol	Electromagnetic brake
None	Without
B	With *1

Symbol	Protective device
None	With thermal protector
T	With thermistor *2

Symbol	Permissible load
None	120% 60 s
Y	150% 60 s

*1 Since a brake power device is a stand-alone, install it inside the enclosure. (This device should be arranged at the customer side.)
*2 To use the thermistor function of the thermistor-equipped motor SF-V5RU [][][][] T, the plug-in option (FR-A8AZ) is required additionally.

◆ Model lineup (●: Available model, -: Not available)

• Rated speed: 1500 r/min (4 poles)

Model	Standard type	Rated output (kW)	1.5	2.2	3.7	5.5	7.5	11	15	18.5	22	30	37	45	55
		Frame number	90L	100L	112M	132S	132M	160M	160L	180M	180M	200L	200L	200L	225S
Standard horizontal type	SF-V5RU(H)[]		●	●	●	●	●	●	●	●	●	●	●	●	●
Flange type	SF-V5RUF(H)[]		●	●	●	●	●	●	●	●	●	●	●	●	-
Standard horizontal type with brake	SF-V5RU(H)[]B		●	●	●	●	●	●	●	●	●	●	●	●	●
Flange type with brake	SF-V5RUF(H)[]B		●	●	●	●	●	●	●	-	-	-	-	-	-

• Rated speed: 1000 r/min (4 poles), maximum speed: 2000 r/min, speed ratio 1:2

Model	Standard type	Rated output (kW)	1.5	2.2	3.7	5.5	7.5	11	15	18.5	22	30	37
		Frame number	100L	112M	132S	132M	160M	160L	180M	180L	200L	200L	225S
Standard horizontal type	SF-V5RU(H)[]1(Y)		●	●	●	●	●	●	●	●	●	●	●
Flange type	SF-V5RUF(H)[]1(Y)		●	●	●	●	●	●	●	●	●	●	-
Standard horizontal type with brake	SF-V5RU(H)[]1B(Y)		●	●	●	●	●	●	●	●	●	●	●
Flange type with brake	SF-V5RUF(H)[]1B(Y)		●	●	●	●	●	●	-	-	-	-	-

• Rated speed: 1000 r/min (4 poles), maximum speed: 3000 r/min, speed ratio 1:3

Model	Standard type	Rated output (kW)	1.5	2.2	3.7	5.5	7.5	11	15	18.5	22	30
		Frame number	112M	132S	132M	160M	160L	180M	180L	200L	200L	225S
Standard horizontal type	SF-V5RU(H)[]3(Y)		●	●	●	●	●	●	●	●	●	●
Flange type	SF-V5RUF(H)[]3(Y)		●	●	●	●	●	●	●	●	●	-
Standard horizontal type with brake	SF-V5RU(H)[]3B(Y)		●	●	●	●	●	●	●	●	●	●
Flange type with brake	SF-V5RUF(H)[]3B(Y)		●	●	●	●	●	-	-	-	-	-

• Rated speed: 500 r/min (4 poles), maximum speed: 2000 r/min, speed ratio 1:4

Model	Standard type	Rated output (kW)	1.5	2.2	3.7	5.5	7.5	11	15
		Frame number	132M	160M	160L	180L	200L	225S	225S
Standard horizontal type	SF-V5RU(H)[]4(Y)		●	●	●	●	●	●	●
Flange type	SF-V5RUF(H)[]4(Y)		●	●	●	●	●	-	-
Standard horizontal type with brake	SF-V5RU(H)[]4B(Y)		●	●	●	●	●	●	●
Flange type with brake	SF-V5RUF(H)[]4B(Y)		●	●	●	-	-	-	-

Since motors with frame No. 250 or higher, 400 V class, speed ratio 1:4 specifications are available as special products, please contact your sales representative.

◆ Combination with the SF-V5RU1, 3, 4, SF-THY and inverter

When using the SF-V5RU1, 3, or 4(Y), always set **Pr.83 Rated motor voltage** and perform the offline auto tuning according to the Instruction Manual and additional materials, which are enclosed with the motor, and the Instruction Manual of the inverter.

	SF-V5RU[]1 (1:2)			SF-V5RU[]3 (1:3)			SF-V5RU[]4 (1:4)		
Voltage	200 V class								
Rated speed	1000 r/min			1000 r/min			500 r/min		
Base frequency	33.33 Hz			33.33 Hz			16.6 Hz		
Maximum speed	2000 r/min			3000 r/min			2000 r/min		
Motor capacity	Motor frame number	Motor model	Inverter model FR-A820-[] (ND rating)*4	Motor frame number	Motor model	Inverter model FR-A820-[] (ND rating)*4	Motor frame number	Motor model	Inverter model FR-A820-[] (ND rating)*4
1.5 kW	100L	SF-V5RU1K1(Y)	00167(2.2K)	112M	SF-V5RU1K3(Y)	00167(2.2K)	132M	SF-V5RU1K4(Y)	00167(2.2K)
2.2 kW	112M	SF-V5RU2K1(Y)	00240(3.7K)	132S	SF-V5RU2K3(Y)	00240(3.7K)	160M	SF-V5RU2K4(Y)	00240(3.7K)
3.7 kW	132S	SF-V5RU3K1(Y)	00340(5.5K)	132M	SF-V5RU3K3(Y)	00340(5.5K)	160L	SF-V5RU3K4*3	00490(7.5K)
5.5 kW	132M	SF-V5RU5K1(Y)	00490(7.5K)	160M	SF-V5RU5K3(Y)	00490(7.5K)	180L	SF-V5RU5K4(Y)	00490(7.5K)
7.5 kW	160M	SF-V5RU7K1(Y)	00630(11K)	160L	SF-V5RU7K3(Y)	00630(11K)	200L	SF-V5RU7K4(Y)	00630(11K)
11 kW	160L	SF-V5RU11K1(Y)	00770(15K)	180M	SF-V5RU11K3(Y)	00770(15K)	225S	SF-V5RU11K4(Y)	00770(15K)
15 kW	180M	SF-V5RU15K1(Y)	00930(18.5K)	180L	SF-V5RU15K3(Y)	00930(18.5K)	225S	SF-V5RU15K4*3	01250(22K)
18.5 kW	180L	SF-V5RU18K1(Y)	01250(22K)	200L	SF-V5RU18K3(Y)	01250(22K)	250MD	SF-THY	01250(22K)
22 kW	200L	SF-V5RU22K1(Y)	01540(30K)	200L	SF-V5RU22K3(Y)	01540(30K)	280MD	SF-THY	01540(30K)
30 kW	200L*2	SF-V5RU30K1(Y)	01870(37K)	225S*1	SF-V5RU30K3(Y)	01870(37K)	280MD	SF-THY	01870(37K)
37 kW	225S	SF-V5RU37K1(Y)	02330(45K)	250MD*1	SF-THY	02330(45K)	280MD	SF-THY	02330(45K)
45 kW	250MD	SF-THY	03160(55K)	250MD*1	SF-THY	03160(55K)	280MD	SF-THY	03160(55K)
55 kW	250MD	SF-THY	03800(75K)	280MD*1	SF-THY	03800(75K)	280L	SF-THY	03800(75K)

Models surrounded by black borders and 400 V class are developed upon receipt of order. (For the SF-THY model, refer to **page 237**.)
*1 The maximum speed is 2400 r/min.
*2 90% output in the high-speed range. (The output is reduced when the speed is 1000 r/min or faster. For details, please contact your sales representative.)
*3 For motors with overload capacity 150% 60 s ("Y" at the end of their model names), contact your sales representative.
*4 A typical example is shown. To determine the combination of the FR-A800 inverter and the SF-THY motor, please contact your sales representative.

◆ Motor specifications

●200 V class (Mitsubishi Electric dedicated motor [SF-V5RU (1500 r/min series)])

Motor type SF-V5RU[ ]K		1	2	3	5	7	11	15	18	22	30	37	45	55
Applicable inverter model FR-A820-[ ]K (ND rating)		2.2	3.7	5.5	7.5	11	15	18.5	22	30	37	45	55	75
Rated output (kW)		1.5	2.2	3.7	5.5	7.5	11	15	18.5	22	30 *1	37 *1	45 *1	55
Rated current (A)		8.5	11.5	17.6	28.5	37.5	54	72.8	88	102	126	168	198	264
Rated torque (N•m)		9.55	14.1	23.6	35.0	47.7	70.0	95.5	118	140	191	235	286	350
Maximum torque 150% 60 s (N•m)		14.3	21.1	35.4	52.4	71.6	105	143	176	211	287	353	429	525
Rated speed (r/min)		1500												
Maximum speed (r/min)		3000 *2												2400
Frame No.		90L	100L	112M	132S	132M	160M	160L	180M	180M	200L	200L	200L	225S
Inertia moment J ($\times 10^{-4}$ kg•m^2)		67.5	105	175	275	400	750	875	1725	1875	3250	3625	3625	6850
Noise *5		75 dB or less									80 dB or less			85 dB or less
Cooling fan (with thermal protector) *7*8	Voltage	Single-phase 200 V/50 Hz Single-phase 200 V to 230 V/60 Hz					Three-phase 200 V/50 Hz Three-phase 200 to 230 V/60 Hz							
	Input *3	36/55 W (0.26/0.32 A)			22/28 W (0.11/0.13 A)		55/71 W (0.39/0.39 A)				100/156 W (0.47/0.53 A)			85/130 W (0.46/0.52 A)
	Recommended thermal setting	0.36 A			0.18 A		0.51 A				0.69 A			0.68 A
Surrounding air temperature, humidity		-10 to +40°C (non-freezing), 90%RH or less (non-condensing)												
Structure (Protective structure)		Totally enclosed forced draft system (Motor: IP44, cooling fan: IP23S) *4												
Detector		Encoder 2048P/R, A phase, B phase, Z phase +12 V/24 VDC power supply *6												
Equipment		Encoder, thermal protector, fan												
Heat resistance class		F												
Vibration rank		V10												
Approx. mass (kg)		24	33	41	52	62	99	113	138	160	238	255	255	320

●400 V class (Mitsubishi Electric dedicated motor [SF-V5RUH (1500 r/min series)])

Motor type SF-V5RUH[ ]K		1	2	3	5	7	11	15	18	22	30	37	45	55
Applicable inverter model FR-A840-[ ]K (ND rating)		2.2	2.2	3.7	7.5	11	15	18.5	22	30	37	45	55	75
Rated output (kW)		1.5	2.2	3.7	5.5	7.5	11	15	18.5	22	30 *1	37 *1	45 *1	55
Rated current (A)		4.2	5.8	8.8	14.5	18.5	27.5	35.5	44	51	67	84	99	132
Rated torque (N•m)		9.55	14.1	23.6	35.0	47.7	70.0	95.5	118	140	191	235	286	350
Maximum torque 150% 60 s (N•m)		14.3	21.1	35.4	52.4	71.6	105	143	176	211	287	353	429	525
Rated speed (r/min)		1500												
Maximum speed (r/min)		3000 *2												2400
Frame No.		90L	100L	112M	132S	132M	160M	160L	180M	180M	200L	200L	200L	225S
Inertia moment J ($\times 10^{-4}$ kg•m^2)		67.5	105	175	275	400	750	875	1725	1875	3250	3625	3625	6850
Noise *5		75 dB or less									80 dB or less			85 dB or less
Cooling fan (with thermal protector) *7*8	Voltage	Single-phase 200 V/50 Hz Single-phase 200 V to 230 V/60 Hz					Three-phase 380 to 400 V/50 Hz Three-phase 400 to 460 V/60 Hz							
	Input *3	36/55 W (0.26/0.32 A)			22/28 W (0.11/0.13 A)		55/71 W (0.19/0.19 A)				100/156 W (0.27/0.30 A)			85/130 W (0.23/0.26 A)
	Recommended thermal setting	0.36 A			0.18 A		0.25 A				0.39 A			0.34 A
Surrounding air temperature, humidity		-10 to +40°C (non-freezing), 90%RH or less (non-condensing)												
Structure (Protective structure)		Totally enclosed forced draft system (Motor: IP44, cooling fan: IP23S) *4												
Detector		Encoder 2048P/R, A phase, B phase, Z phase +12 V/24 VDC power supply *6												
Equipment		Encoder, thermal protector, fan												
Heat resistance class		F												
Vibration rank		V10												
Approx. mass (kg)		24	33	41	52	62	99	113	138	160	238	255	255	320

*1 80% output in the high-speed range. (The output is reduced when the speed is 2400 r/min or more. Contact us separately for details.)
*2 A dedicated motor of 3.7 kW or less can be run at the maximum speed of 3600 r/min. Consult our sales office when using the motor at the maximum speed.
*3 Power (current) at 50 Hz/60 Hz.
*4 Since a motor with brake has a window for gap check, the protective structure of both the cooling fan section and brake section is IP20. S of IP23S is an additional code indicating the condition that protection from water intrusion is established only when a cooling fan is not operating.
*5 The value when high carrier frequency is set (**Pr.72** = 6, **Pr.240** = 0).
*6 The 12 V/24 V power supply is required as the power supply for the encoder. (When the FR-A8TP is used, the 24 V power supply of the FR-A8TP can be used for the encoder of the SF-V5RU.)
*7 The cooling fan is equipped with a thermal protector. The cooling fan stops when the coil temperature exceeds the specified value in order to protect the fan motor. A restrained cooling fan or degraded fan motor insulation could be causes for the rise in coil temperature.The cooling fan re-starts when the coil temperature drops to normal.
*8 The cooling fan voltage and input values are the basic specifications of the cooling fan alone and free air values. The input value becomes slightly larger when it is rotated by this motor due to an increased workload, but the cooling fan can be used as it is.When preparing a thermal relay at the user side, use the recommended thermal setting.

◆ Dedicated motor outline dimension drawings (standard horizontal type)

Frame Number 90L

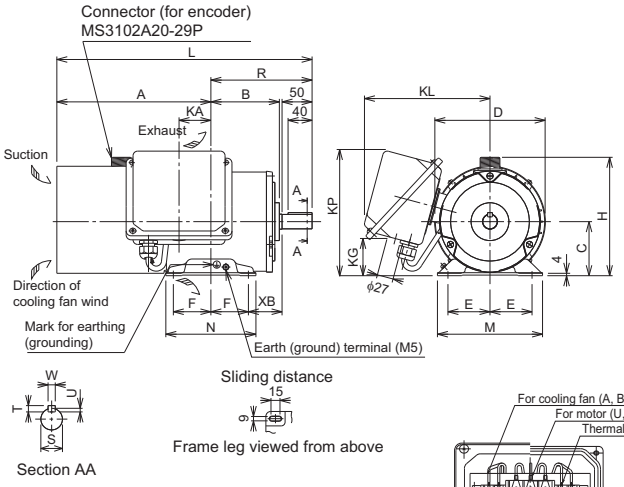

Frame Number 100L, 112M, 132S, 132M

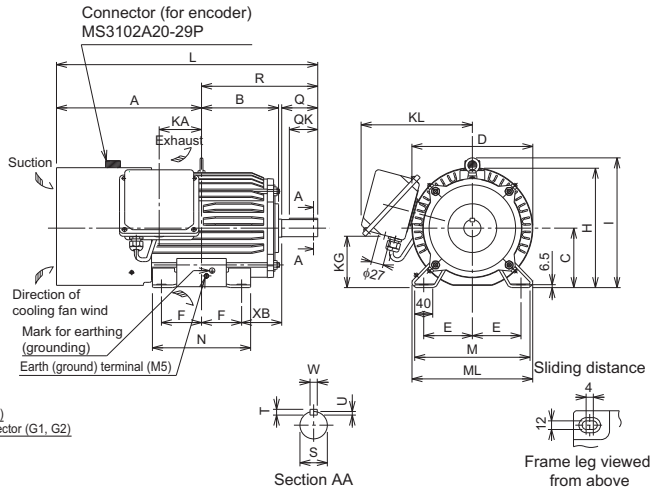

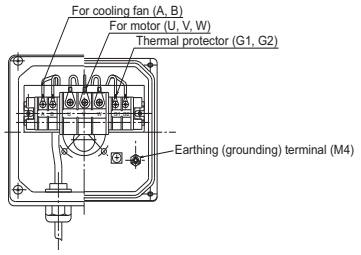

Frame Number 160M, 160L, 180M, 180L

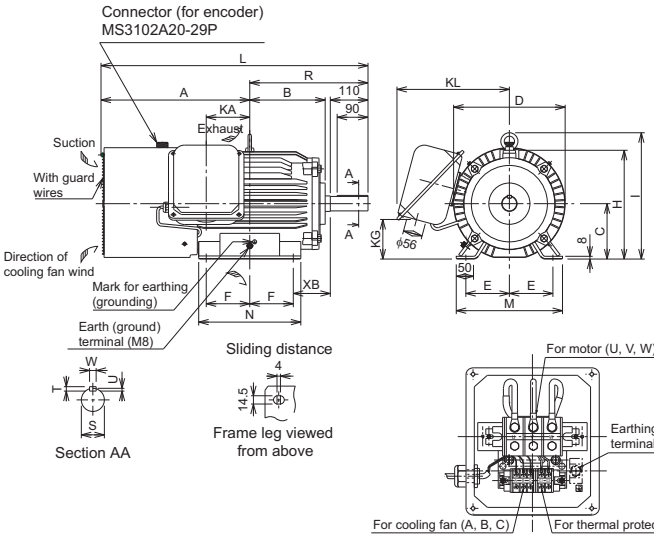

Frame Number 200L, 225S

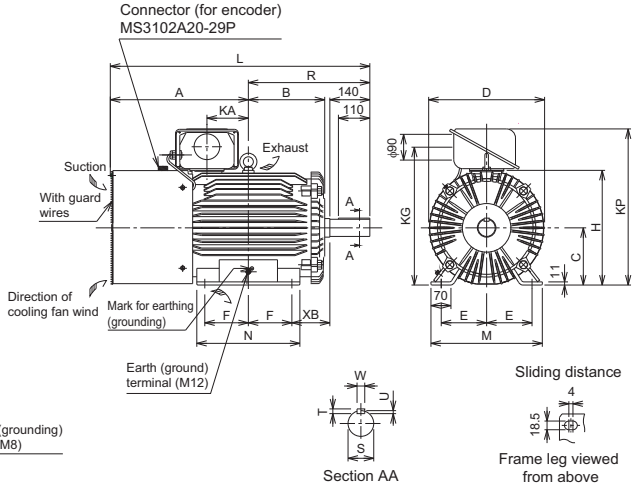

Make sure to earth the earth terminal of the frame installation foot as well as the earth terminal in the terminal box.

Dimensions table

(Unit: mm)

SF-V5RU [ ]K	SF-V5RU [ ]K1	SF-V5RU [ ]K3	SF-V5RU [ ]K4	Frame No.	Mass (kg)	Motor																							Terminal screw size		
						A	B	C	D	E	F	H	I	KA	KG	KL(KP)	L	M	ML	N	XB	Q	QK	R	S	T	U	W	U,V,W	A,B,(C)	G1,G2
1	—	—	—	90L	24	256.5	114	90	183.6	70	62.5	198	—	53	65	220(210)	425	175	—	150	56	—	—	168.5	24j6	7	4	8	M6	M4	M4
2	1	—	—	100L	33	284	128	100	207	80	70	203.5	230	65	78	231	477	200	212	180	63	60	45	193	28j6	7	4	8	M6	M4	M4
3	2	1	—	112M	41	278	135	112	228	95	70	226	253	69	93	242	478	230	242	180	70	60	45	200	28j6	7	4	8	M6	M4	M4
5	3	2	—	132S	52	303	152	132	266	108	70	265	288	75	117	256	542	256	268	180	89	80	63	239	38k6	8	5	10	M6	M4	M4
7	5	3	1	132M	62	322	171	132	266	108	89	265	288	94	117	256	580	256	268	218	89	80	63	258	38k6	8	5	10	M6	M4	M4
11	7	5	2	160M	99	412	198	160	318	127	105	316	367	105	115	330	735	310	—	254	108	—	—	323	42k6	8	5	12	M8	M4	M4
15	11	7	3	160L	113	434	220	160	318	127	127	316	367	127	115	330	779	310	—	298	108	—	—	345	42k6	8	5	12	M8	M4	M4
18	—	—	—	180M	138	438.5	225.5	180	363	139.5	120.5	359	410	127	139	352	790	335	—	285	121	—	—	351.5	48k6	9	5.5	14	M8	M4	M4
22	15	11	—		160																										
—	18	15	5	180L	200	457.5	242.5	180	363	139.5	139.5	359	410	146	139	352	828	335	—	323	121	—	—	370.5	55m6	10	6	16	M8	M4	M4
30	—	—	7	200L	238	483.5	267.5	200	406	159	152.5	401	—	145	487	(546)	909	390	—	361	133	—	—	425.5	60m6	11	7	18	M10	M4	M4
37, 45	22, 30	18, 22	—		255																										
55	37	30	11, 15	225S	320	500	277	225	446	178	143	446	—	145	533	(592)	932	428	—	342	149	—	—	432	65m6	11	7	18	M10	M4	M4

Note) 1. Install the motor on the floor and use it with the shaft horizontal.
2. Leave an enough clearance between the fan suction port and wall to ensure adequate cooling.
Also, check that the ventilation direction of a fan is from the opposite load side to the load side.
3 The size difference of top and bottom of the shaft center height is $^{0}_{-0.5}$
4 The 400 V class motor has "-H" at the end of its type name.

◆ Dedicated motor outline dimension drawings (1500r/min series) (standard horizontal type with brake)

Frame Number 90L

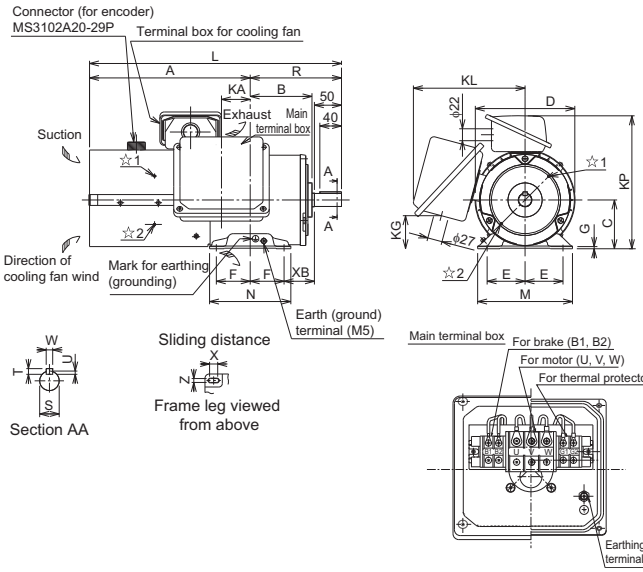

Frame Number 100L, 112M, 132S, 132M

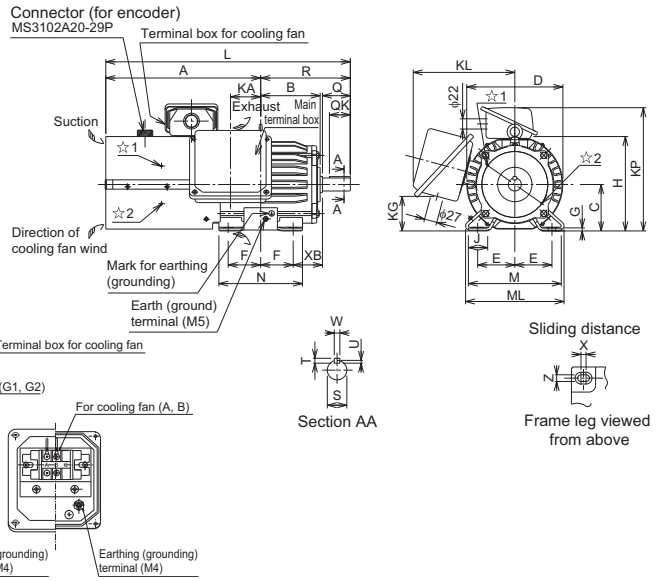

Frame Number 160M, 160L, 180M, 180L

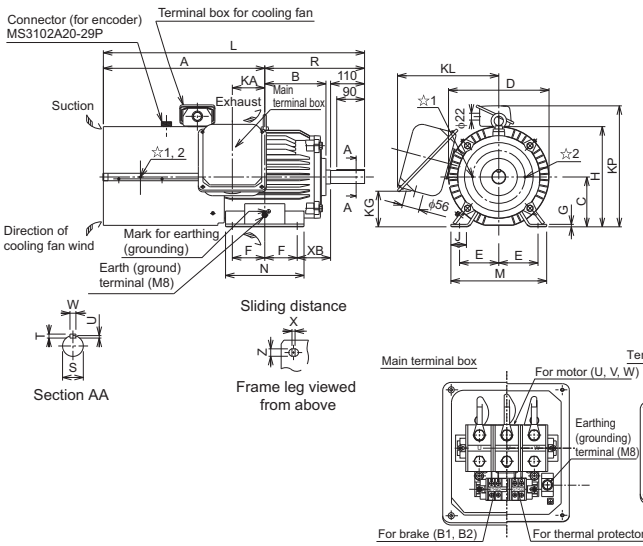

Frame Number 200L, 225S

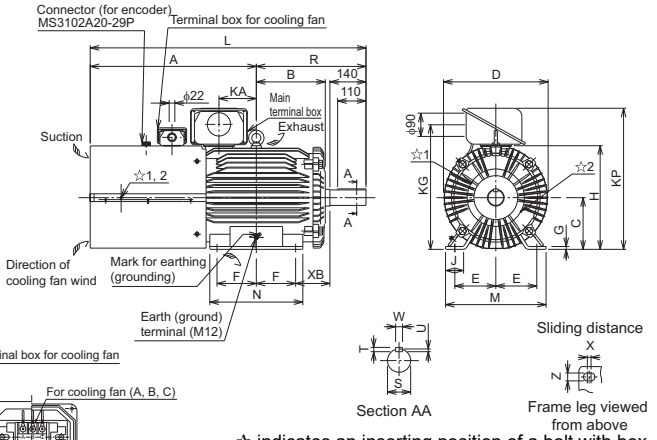

☆ indicates an inserting position of a bolt with hex head holes for manual opening.
Make sure to earth the earth terminal of the frame installation foot as well as the earth terminal in the terminal box.

Dimensions table

(Unit: mm)

SF-V5RU []KB	SF-V5RU []K1B	SF-V5RU []K3B	SF-V5RU []K4B	Frame No.	Mass (kg)	Motor																					Shaft end							Terminal screw size			
						A	B	C	D	E	F	G	H	I	J	KA	KD	KG	KL	KP	L	M	ML	N	X	XB	Z	Q	QK	R	S	T	U	W	U,V,W	A,B,(C)	G1, G2	B1, B2
1	—	—	—	90L	29	296.5	114	90	183.6	70	62.5	4	—	—	—	53	27	65	220	245	465	175	—	150	15	56	9	50	40	168.5	24j6	7	4	8	M6	M4	M4	M4
2	1	—	—	100L	46	333.5	128	100	207	80	70	6.5	—	—	40	65	27	78	231	265	526.5	200	212	180	4	63	12	60	45	193	28j6	7	4	8	M6	M4	M4	M4
3	2	1	—	112M	53	355	135	112	228	95	70	6.5	—	—	40	69	27	93	242	290	555	230	242	180	4	70	12	60	45	200	28j6	7	4	8	M6	M4	M4	M4
5	3	2	—	132S	70	416	152	132	266	108	70	6.5	—	—	40	75	27	117	256	329	655	256	268	180	4	89	12	80	63	239	38k6	8	5	10	M6	M4	M4	M4
7	5	3	1	132M	80	435	171	132	266	108	89	6.5	—	—	40	94	27	117	256	329	693	256	268	218	4	89	12	80	63	258	38k6	8	5	10	M6	M4	M4	M4
11	7	5	2	160M	140	522.5	198	160	318	127	105	8	—	—	50	105	56	115	330	391	845.5	310	—	254	4	108	14.5	110	90	323	42k6	8	5	12	M8	M4	M4	M4
15	11	7	3	160L	155	544.5	220	160	318	127	127	8	—	—	50	127	56	115	330	391	889.5	310	—	298	4	108	14.5	110	90	345	42k6	8	5	12	M8	M4	M4	M4
18	—	—	—	180M	185	568.5	225.5	180	363	139.5	120.5	8	—	—	50	127	56	139	352	428	920	335	—	285	4	121	14.5	110	90	351.5	48k6	9	5.5	14	M8	M4	M4	M4
22	15	11	—		215																																	
—	18	15	5	180L	255	587.5	242.5	180	363	139.5	139.5	8	—	—	50	146	56	139	352	428	958	335	—	323	4	121	14.5	110	90	370.5	55m6	10	6	16	M8	M4	M4	M4
30	—	—	7	200L	305	644.5	267.5	200	406	159	152.5	11	—	—	70	145	90	487	—	546	1070	390	—	361	4	133	18.5	140	110	425.5	60m6	11	7	18	M10	M4	M4	M4
37, 45	22, 30	18, 22	—		330																																	
55	37	30	11, 15	225S	395	659	277	225	446	178	143	11	—	—	70	145	90	533	—	592	1091	428	—	342	4	149	18.5	140	110	432	65m6	11	7	18	M10	M4	M4	M4

Note) 1. Install the motor on the floor and use it with the shaft horizontal.
2. Leave an enough clearance between the fan suction port and wall to ensure adequate cooling.
Also, check that the ventilation direction of a fan is from the opposite load side to the load side.
3 The size difference of top and bottom of the shaft center height is $^{0}_{-0.5}$
4 The 400 V class motor has "-H" at the end of its type name.
5. Since a brake power device is a stand-alone, install it inside the enclosure.
(This device should be arranged at the customer side.)

◆ Dedicated motor outline dimension drawings (1500r/min series) (flange type)

Frame Number 90L

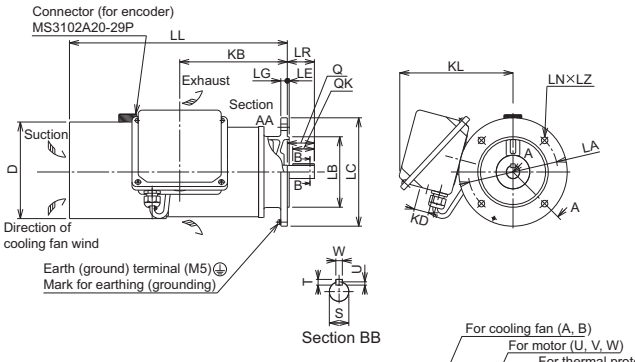

Frame Number 100L, 112M, 132S, 132M

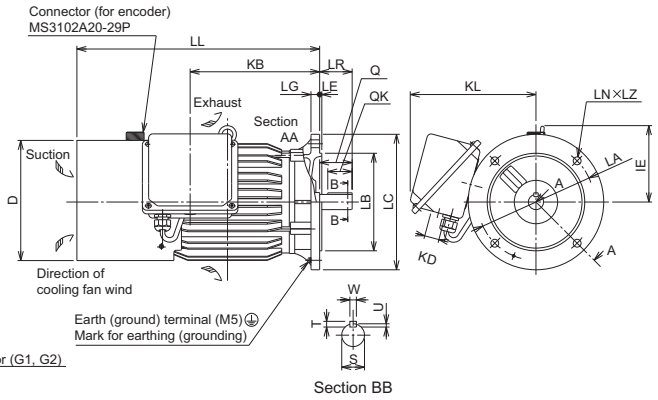

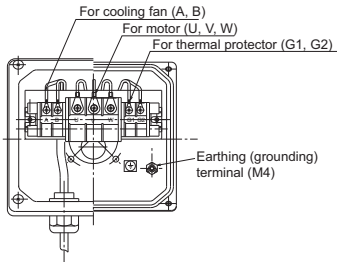

Frame Number 160M, 160L, 180M, 180L

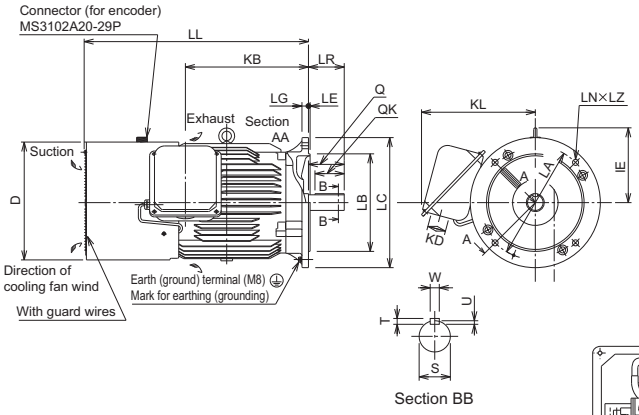

Frame Number 200L

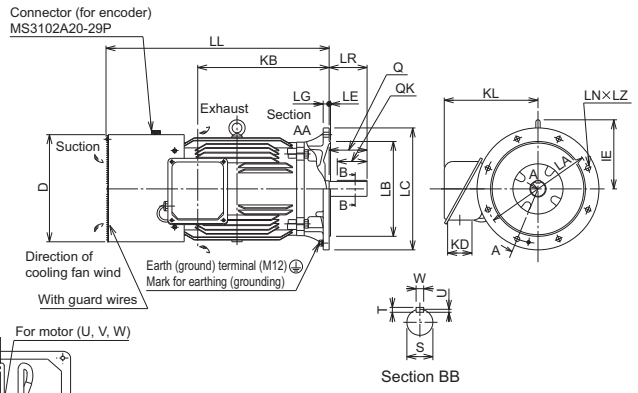

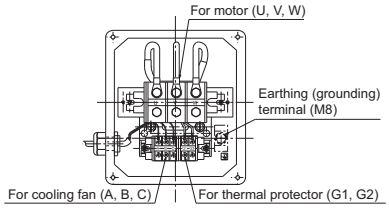

Make sure to earth the earth terminal of the flange section as well as the earth terminal in the terminal box.

Dimensions table

(Unit: mm)

SF-V5RU F[ ]K	SF-V5RU F[ ]K1	SF-V5RU F[ ]K3	SF-V5RU F[ ]K4	Flange Number	Frame No.	Mass (kg)	Motor													Shaft end							Terminal screw size		
							D	IE	KB	KD	KL	LA	LB	LC	LE	LG	LL	LN	LZ	LR	Q	QK	S	T	U	W	U,V,W	A,B,(C)	G1,G2
1	—	—	—	FF165	90L	26.5	183.6	—	198.5	27	220	165	130j6	200	3.5	12	402	4	12	50	50	40	24j6	7	4	8	M6	M4	M4
2	1	—	—	FF215	100L	37	207	130	213	27	231	215	180j6	250	4	16	432	4	14.5	60	60	45	28j6	7	4	8	M6	M4	M4
3	2	1	—	FF215	112M	46	228	141	239	27	242	215	180j6	250	4	16	448	4	14.5	60	60	45	28j6	7	4	8	M6	M4	M4
5	3	2	—	FF265	132S	65	266	156	256	27	256	265	230j6	300	4	20	484	4	14.5	80	80	63	38k6	8	5	10	M6	M4	M4
7	5	3	1	FF265	132M	70	266	156	294	27	256	265	230j6	300	4	20	522	4	14.5	80	80	63	38k6	8	5	10	M6	M4	M4
11	7	5	2	FF300	160M	110	318	207	318	56	330	300	250j6	350	5	20	625	4	18.5	110	110	90	42k6	8	5	12	M8	M4	M4
15	11	7	3	FF300	160L	125	318	207	362	56	330	300	250j6	350	5	20	669	4	18.5	110	110	90	42k6	8	5	12	M8	M4	M4
18	—	—	—	FF350	180M	160	363	230	378.5	56	352	350	300j6	400	5	20	690	4	18.5	110	110	90	48k6	9	5.5	14	M8	M4	M4
22	15	11	—			185																							
—	18	15	5	FF350	180L	225	363	230	416.5	56	352	350	300j6	400	5	20	728	4	18.5	110	110	90	55m6	10	6	16	M8	M4	M4
30	—	—	7	FF400	200L	270	406	255	485	90	346	400	350j6	450	5	22	823.5	8	18.5	140	140	110	60m6	11	7	18	M10	M4	M4
37, 45	22, 30	18, 22	—			290																							

Note) 1. Install the motor on the floor and use it with the shaft horizontal.
For use under the shaft, the protection structure of the cooling fan is IP20.
2. Leave an enough clearance between the fan suction port and wall to ensure adequate cooling.
Also, check that the ventilation direction of a fan is from the opposite load side to the load side.
3. The 400 V class motor has "-H" at the end of its type name.

◆ Dedicated motor outline dimension drawings (1500r/min series) (flange type with brake)

Frame Number 90L

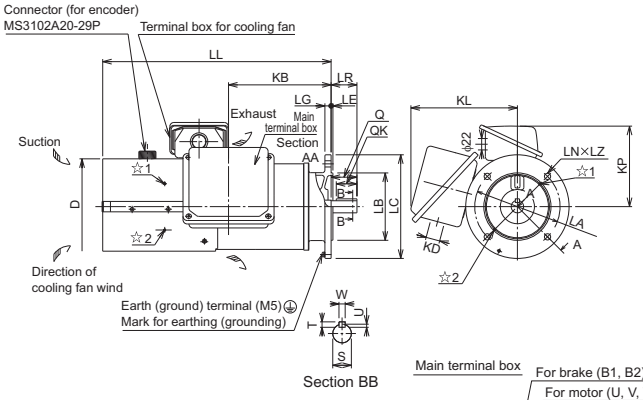

Frame Number 100L, 112M, 132S, 132M

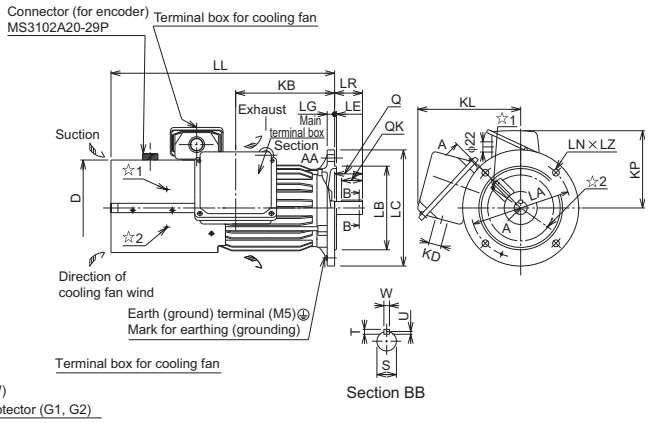

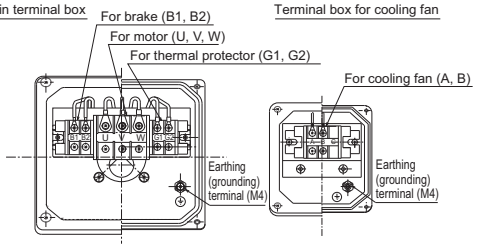

Frame Number 160M, 160L

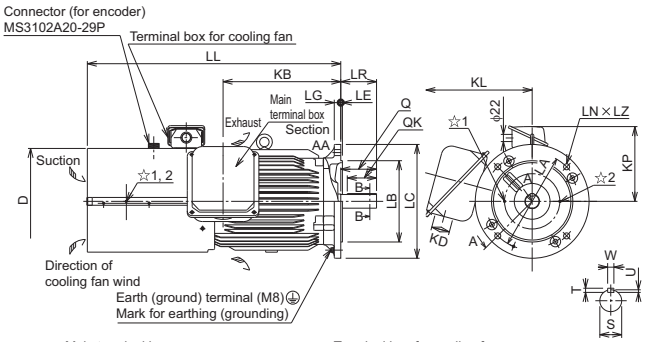

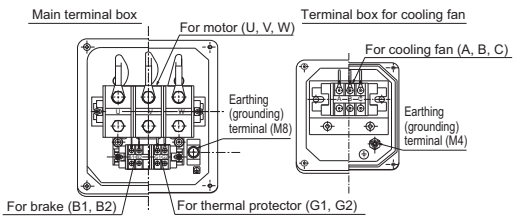

☆ indicates an inserting position of a bolt with hex head holes for manual opening.

Make sure to earth the earth terminal of the flange section as well as the earth terminal in the terminal box.

Dimensions table

(Unit: mm)

SF-V5RU F[ ]KB	SF-V5RU F[ ]K1B	SF-V5RU F[ ]K3B	SF-V5RU F[ ]K4B	Flange Number	Frame No.	Mass (kg)	Motor													Shaft end							Terminal screw size			
							D	KB	KD	KL	KP	LA	LB	LC	LE	LG	LL	LN	LZ	LR	Q	QK	S	T	U	W	U,V,W	A,B,(C)	B1,B2	G1,G2
1	—	—	—	FF165	90L	31.5	183.6	198.5	27	220	155	165	130j6	200	3.5	12	442	4	12	50	50	40	24j6	7	4	8	M6	M4	M4	M4
2	1	—	—	FF215	100L	50	207	213	27	231	165	215	180j6	250	4	16	481.5	4	14.5	60	60	45	28j6	7	4	8	M6	M4	M4	M4
3	2	1	—	FF215	112M	58	228	239	27	242	178	215	180j6	250	4	16	525	4	14.5	60	60	45	28j6	7	4	8	M6	M4	M4	M4
5	3	2	—	FF265	132S	83	266	256	27	256	197	265	230j6	300	4	20	597	4	14.5	80	80	63	38k6	8	5	10	M6	M4	M4	M4
7	5	3	1	FF265	132M	88	266	294	27	256	197	265	230j6	300	4	20	635	4	14.5	80	80	63	38k6	8	5	10	M6	M4	M4	M4
11	7	5	2	FF300	160M	151	318	318	56	330	231	300	250j6	350	5	20	735.5	4	18.5	110	110	90	42k6	8	5	12	M8	M4	M4	M4
15	11	7	3	FF300	160L	167	318	362	56	330	231	300	250j6	350	5	20	779.5	4	18.5	110	110	90	42k6	8	5	12	M8	M4	M4	M4

Note) 1. Install the motor on the floor and use it with the shaft horizontal.
2. Leave an enough clearance between the fan suction port and wall to ensure adequate cooling.
Also, check that the ventilation direction of a fan is from the opposite load side to the load side.
3. The 400 V class motor has "-H" at the end of its type name.
4. Since a brake power device is a stand-alone, install it inside the enclosure.
(This device should be arranged at the customer side.)

● Application to vector control dedicated motors (SF-THY) (75 kW or higher)

For performing vector control, the FR-A8AP/FR-A8TP (vector control compatible option) is required.
When the FR-A8TP is not used, a 12 V or 24 V power supply is required as the power supply for the encoder of the SF-THY. (When the FR-A8TP is used, the 24 V power supply of the FR-A8TP can be used for the encoder of the SF-THY.)

◆ Motor torque

When the vector control dedicated motor (SF-THY) and inverter of the same capacity are used and rated voltage is input, the torque characteristics are as shown below.

<75 (kW)>

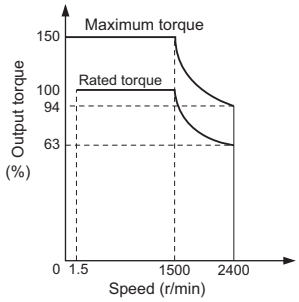

<90 to 250 (kW)>

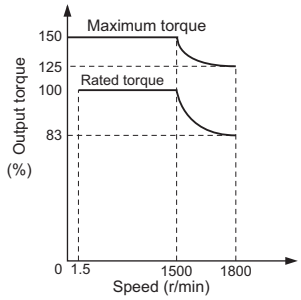

◆ Model lineup

- Rated speed: 1500 r/min (4 poles)

Model	Standard type	Rated output (kW)						
		75	90	110	132	160	200	250
Standard horizontal type	SF-THY[]	75	90	110	132	160	200	250

- Both 200 V and 400 V classes have the same model name.
  Since motors speed ratio, 1:2, 1:3, or 1:4 specifications are available as special products, contact your sales representative.

◆ Motor specifications

Motor type			SF-THY							
Applicable inverter (ND rating)			FR-A820-[ ]K	FR-A840-[ ]K						
			90	90	110	132	160	185	220	280
Rated output (kW)			75	75	90	110	132	160	200	250
Rated torque (N·m)			477	477	572	700	840	1018	1273	1591
Maximum torque 150%60 s (N·m)			715	715	858	1050	1260	1527	1909	2386
Rated speed (r/min)			1500	1500						
Maximum speed (r/min)			2400	2400	1800					
Frame No.			250MD	250MD	250MD	280MD	280MD	280MD	280L	315H
Inertia moment J (kg·m^2)			1.1	1.1	1.7	2.3	2.3	4.0	3.8	5.0
Noise			90 dB	90 dB			95 dB			
Cooling fan	Voltage		Three-phase, 200 V/50 Hz, 200 V/60 Hz, 220 V/60 Hz (400 V class cooling fan is available upon order)							
	Input (W)	50 Hz	750	400	400	400	400	400	750	750
		60 Hz		750	750	750	750	750	1500	1500
Approx. mass (kg)			610	610	660	870	890	920	1170	1630
Common specifications	Surrounding air temperature, humidity		-10 to +40°C (non-freezing), 90%RH or less (non-condensing)							
	Structure		Totally enclosed forced draft system							
	Equipment		Encoder, thermal protector*2, fan							
	Insulation		Class F							
	Vibration rank		V10							
	Dedicated encoder	Resolution	2048 pulse/rev							
		Power supply voltage	12 V/24 VDC±10% *1							
		Current consumption	90 mA							
		Output signal form	A, B phases (90° phase shift) Z phase: 1 pulse/rev							
		Output circuit	Complementary (constant voltage output matched by emitter follow)							
		Output voltage	"H" level: Power supply voltage 9 V or more (IOH: -20 mA) "L" level: Power supply voltage 3 V or less (IOL: 20 mA)							

*1 The 12 V/24 V power supply is required as the power supply for the encoder.
*2 A motor with a thermal protector is also available. Contact your sales representative.

◆ Dedicated motor outline dimension drawings (1500 r/min series)

Frame Number 250MD, 280MD
75 kW to 160 kW

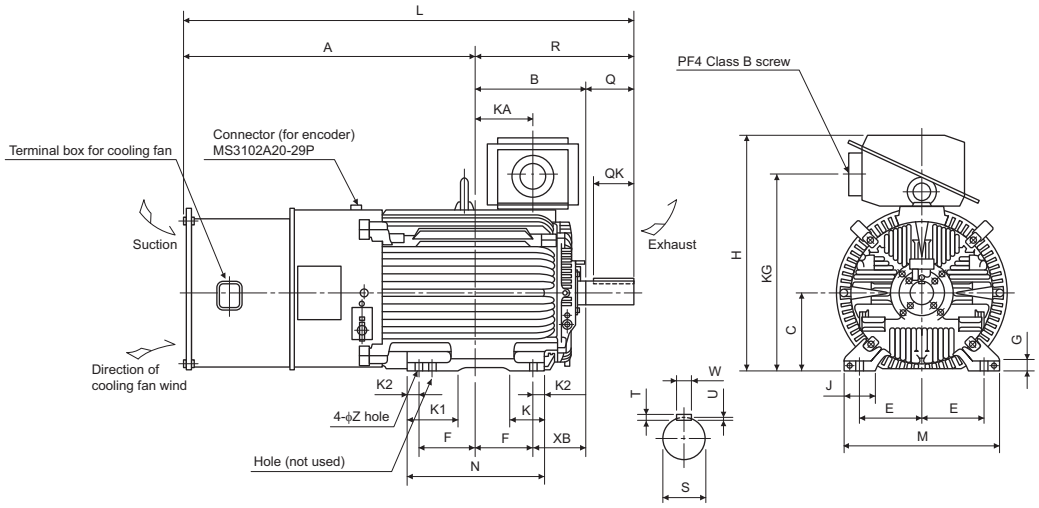

Frame Number 280L, 315H
200 kW, 250 kW

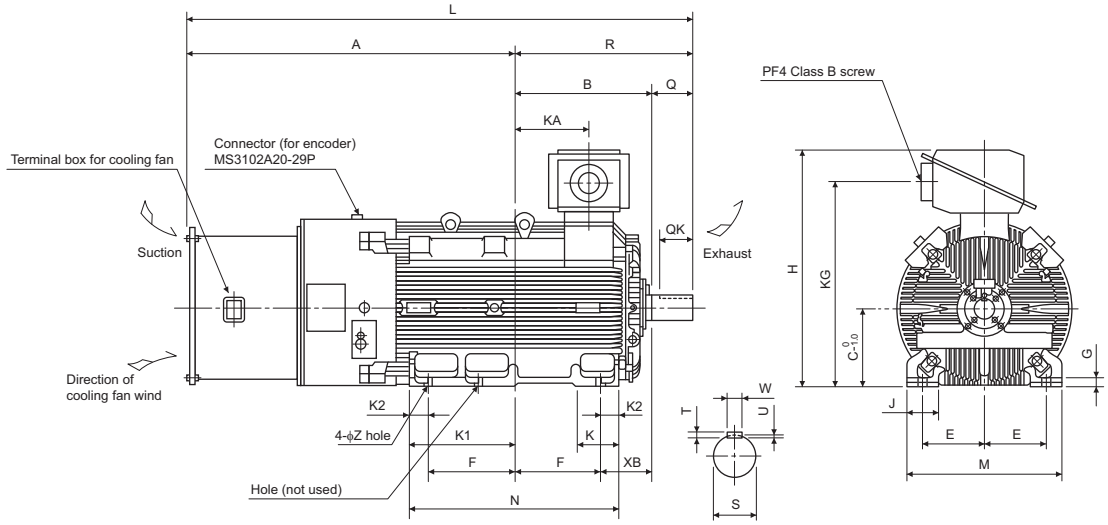

Dimensions table

(Unit: mm)

Output	Frame No.	Mass (kg)	Motor																				Shaft end size					
			A	B	C	D	E	F	G	H	J	K	K1	K2	L	M	N	R	Z	XB	KA	KG	Q	QK	S	W	T	U
75	250MD	610	988.5	340.5	250	557	203	174.5	30	775	100	130	168	50	1471	486	449	482.5	24	168	157.5	635	140	110	ϕ75m6	20	12	7.5
90	250MD	660	988.5	340.5	250	557	203	174.5	30	775	100	130	168	50	1471	486	449	482.5	24	168	157.5	635	140	110	ϕ75m6	20	12	7.5
110	280MD	870	1049.5	397.5	280	607	228.5	209.5	30	845	110	130	181	40	1619	560	449	569.5	24	190	210.5	705	170	140	ϕ85m6	22	14	9
132	280MD	890	1049.5	397.5	280	607	228.5	209.5	30	845	110	130	181	40	1619	560	449	569.5	24	190	210.5	705	170	140	ϕ85m6	22	14	9
160	280MD	920	1049.5	397.5	280	607	228.5	209.5	30	845	110	130	181	40	1619	560	499	569.5	24	190	210.5	705	170	140	ϕ85m6	22	14	9
200	280L	1170	1210.5	416.5	280	652	228.5	228.5	30	885	110	160	160	75	1799	560	607	588.5	24	190	214.5	745	170	140	ϕ85m6	22	14	9
250	315H	1630	1343	565	315	717	254	355	35	965	130	175	428	80	2084	636	870	741	28	216	306	825	170	140	ϕ95m6	25	14	9

Note) The tolerance of the top and bottom of the center shaft height *C is $^{0}_{-0.5}$ for the 250 frame and $^{0}_{-1.0}$ for the 280 frame or more.

● Application to IPM motors (MM-CF series)

◆ Motor model

M M - C F 5 2 □ □ □ □

Symbol	Output	Symbol	Output
5	0.5 kW	35	3.5 kW
10	1.0 kW	50	5.0 kW
15	1.5 kW	70	7.0 kW
20	2.0 kW		

Symbol	Rated speed
2	2000 r/min.

Symbol	Electromagnetic brake*1
None	N/A
B	Yes

Symbol	Input power supply form
None	Terminal box lead (standard part)
C	Cannon connector

Symbol	Axis form
None	Standard (straight axis)
K	With key groove

Rated speed	Motor model (The rated output is indicated in square brackets.)	Motor capacity							Remarks
		0.5 kW	1.0 kW	1.5 kW	2.0 kW	3.5 kW	5.0 kW	7.0 kW	
2000 r/min	MM-CF[]2	●	●	●	●	●	●	●	Standard
	MM-CF[]2B	●	●	●	●	●	-	-	Made on order
	MM-CF[]2C	●	●	●	●	●	●	●	
	MM-CF[]2K	●	●	●	●	●	●	●	

●: Released model - : Not available

◆ Motor specifications

◆ IPM motor MM-CF (2000 r/min series)

Motor type: MM-CF[ ]			52(C)(B)	102(C)(B)	152(C)(B)	202(C)(B)	352(C)(B)	502(C)	702(C)
Applicable inverter	FR-A820-[ ]	SLD	0.4K	0.4K	0.75K	1.5K	2.2K	3.7K	5.5K
		LD	0.4K	0.4K	0.75K	1.5K	2.2K	3.7K	5.5K
		ND	0.4K	0.75K	1.5K	2.2K	3.7K	5.5K	7.5K
		HD	0.75K	1.5K	2.2K	3.7K	5.5K	7.5K	11K
Continuous characteristics*1	Rated output (kW)		0.5	1.0	1.5	2.0	3.5	5.0	7.0
	Rated torque (N·m)		2.39	4.78	7.16	9.55	16.70	23.86	33.41
Rated speed*1 (r/min)			2000						
Max. speed (r/min)			3000						
Instantaneous permissible speed (r/min)			3450 *6						
Maximum torque (N·m)			4.78	9.56	14.32	19.09	33.41	47.73	66.82
Inertia moment J*5 ($\times 10^{-4}$kg·m^2)			6.6 (7.0)	13.7 (14.9)	20.0 (21.2)	45.5 (48.9)	85.6 (89.0)	120.0	160.0
Recommended ratio of load inertia moment to motor shaft inertia moment*2			100 times max.			50 times max.			
Rated current (A)			1.81	3.70	5.22	7.70	12.5	20.5	27.0
Insulation rank			Class F						
Structure			Totally-enclosed, self-cooling (protective system: IP44 *3, IP65 *3*4)						
Surrounding air temperature, humidity			-10°C to +40°C (non-freezing), 90%RH or less (non-condensing)						
Storage temperature and humidity			-20°C to +70°C (non-freezing), 90%RH or less (non-condensing)						
Ambience			Indoors (no direct sunlight), free from corrosive gas, flammable gas, oil mist, dust and dirt						
Altitude			Maximum 1000 m						
Vibration			X: 9.8 m/s^2, Y: 24.5 m/s^2						
Mass (kg)*5			5.1 (7.8)	7.2 (11)	9.3 (13)	13 (20)	19 (28)	27	36

*1 When the power supply voltage drops, we cannot guarantee the above output and rated speed.
*2 When the load torque is 20% of the motor rating. The permissible load inertia moment ratio is smaller when the load torque is larger. Consult us if the load inertia moment ratio exceseds the above value.
*3 This does not apply to the shaft through portion.
*4 Value for the MM-CF[ ]2C.
*5 The value for the MM-CF[ ]2B is indicated in parentheses.
*6 Set 3150 r/min (210 Hz) or less in **Pr.374 Overspeed detection level**. The inverter may be damaged by the motor induction voltage if the motor speed exceeds 3150 r/min (210 Hz).

◆ Motor torque characteristic

Under high frequency superposition control

MM-CF 1.5 kW or lower

ND rating selected

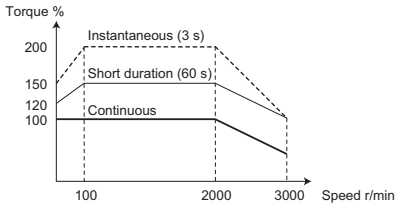

HD rating selected

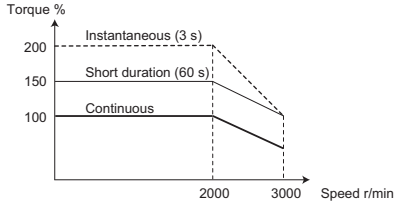

MM-CF 2.0 kW or higher

ND rating selected

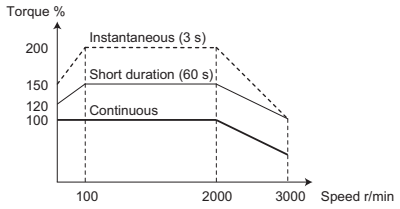

HD rating selected

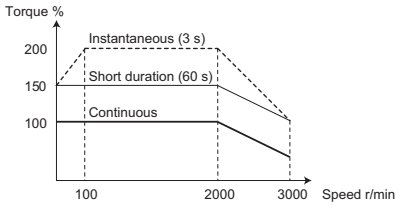

* Zero speed up to a 150% instantaneous output torque

Under current synchronization operation

MM-CF All capacities

ND rating selected

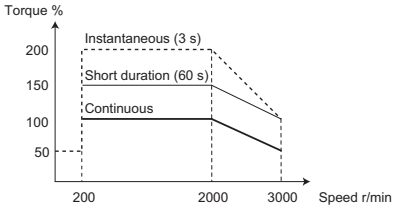

◆ Motor outline dimension

MM-CF[] (Standard)

[Unit: mm]

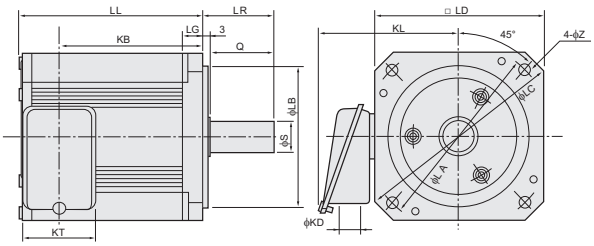

Model	Output (kW)	LL	ϕLA	ϕLB	ϕLC	□LD	LG	KB	ϕKD	KL	KT	ϕZ	LR	Q	ϕS
MM-CF52	0.5	97	145	110h7	165	130	12	62	22	110	56	9	55	50	24h6
MM-CF102	1.0	122						87							
MM-CF152	1.5	147						112							
MM-CF202	2.0	128	200	$114.3^{0}_{-0.025}$	230	176	18	81.5	27	141	93	13.5	79	75	$35^{+0.010}_{0}$
MM-CF352	3.5	170						123.5							
MM-CF502	5.0	224						172.5							
MM-CF702	7.0	299						247.5							

The outline dimensions may be changed. When precise outline dimensions are required, contact your sales representative.

MM-CF[]B (With an electromagnetic brake)

[Unit: mm]

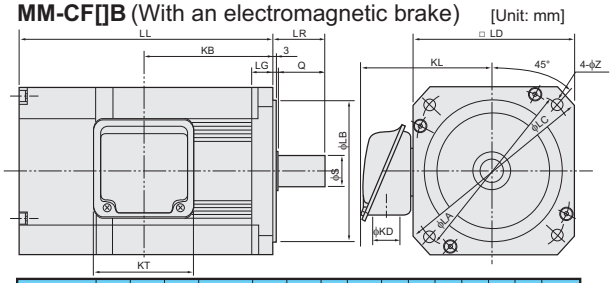

Model	Output (kW)	LL	ϕLA	ϕLB	ϕLC	□LD	LG	KB	ϕKD	KL	KT	ϕZ	LR	Q	ϕS
MM-CF52B	0.5	159	145	110h7	165	130	12	58	22	108	80	9	55	50	24h6
MM-CF102B	1.0	184						83							
MM-CF152B	1.5	209						108							
MM-CF202B	2.0	231	200	$114.3^{0}_{-0.025}$	230	176	18	97.5	27	141	93	13.5	79	75	$35^{+0.010}_{0}$
MM-CF352B	3.5	279						139.5							

The outline dimensions may be changed. When precise outline dimensions are required, contact your sales representative.

MM-CF[]C (Waterproof type)

[Unit: mm]

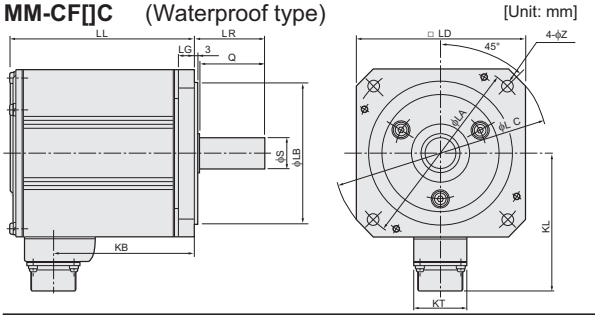

Model	Output (kW)	LL	ϕLA	ϕLB	ϕLC	□LD	LG	KB	KL	KT	ϕZ	LR	Q	ϕS
MM-CF52C	0.5	97	145	110h7	165	130	12	57.5	111	41	9	55	50	24h6
MM-CF102C	1.0	122						82.5						
MM-CF152C	1.5	147						107.5						
MM-CF202C	2.0	128	200	$114.3^{0}_{-0.025}$	230	176	18	83.3	141	46	13.5	79	75	$35^{+0.010}_{0}$
MM-CF352C	3.5	170						125.3						
MM-CF502C	5.0	224						179.3						
MM-CF702C	7.0	299						249.3	150	58				

The outline dimensions may be changed. When precise outline dimensions are required, contact your sales representative.

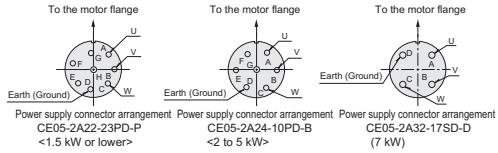

Power supply connector arrangement CE05-2A22-23PD-P <1.5 kW or lower>

Power supply connector arrangement CE05-2A24-10PD-B <2 to 5 kW>

Power supply connector arrangement CE05-2A32-17SD-D (7 kW)

With key groove

[Unit: mm]

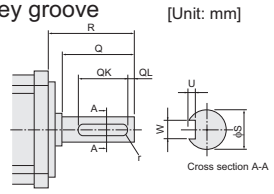

Motor	ϕS	R	Q	W	QK	QL	U	r
MM-CF52 to 152	24h6	55	50	$8^{0}_{-0.036}$	36	5	$4^{+0.2}_{0}$	4
MM-CF202 to 702	$35^{+0.010}_{0}$	79	75	$10^{0}_{-0.036}$	55	5	$5^{+0.2}_{0}$	5

PM sensorless vector control, PM parameter initial setting

Pr.	GROUP	Name	Pr.	GROUP	Name
998	E430	PM parameter initialization	IPM		IPM initialization

Performing the IPM parameter initialization makes the IPM motor MM-CF ready for PM sensorless vector control. (This function is not available in the FR-A842-P.)

PM sensorless vector control requires the following conditions.

- The motor capacity is equal to or one rank lower than the inverter capacity.
- Single-motor operation (one motor to one inverter) is preformed.
- The overall wiring length with the motor is 100 m or shorter. (Even with the IPM motor MM-CF, when the wiring length exceeds 30 m, perform offline auto tuning.)

◆ Setting procedure of PM sensorless vector control

◆ Selecting the PM sensorless vector control by the IPM initialization mode

This inverter is set for an induction motor in the initial setting. Follow the following procedure to change the setting for the PM sensorless vector control.

POINT

- The parameters required to drive an MM-CF IPM motor are automatically changed as a batch.
- To change to the PM sensorless vector control, perform the following steps before setting other parameters. If the PM sensorless vector control is selected after setting other parameters, some of those parameters will be initialized too. (Refer to "IPM parameter initialization list" for the parameters that are initialized.)

Operation

1. Turning ON the power of the inverter

The operation panel is in the monitor mode.

2. Changing the operation mode

Press [PU/EXT] to choose the PU operation mode. [PU] indicator is lit.

3. Selecting the parameter setting mode

Press [MODE] to choose the parameter setting mode. [PRM] indicator is lit.

4. IPM parameter initialization

Turn ⊕ until "IPM" (IPM parameter initialization) appears.

5. Displaying the set value

Press [SET] to read the present set value. "0" (initial value) appears.

6. Changing the setting value

Turn ⊕ to change the set value to "3003", then press [SET].

"3003" and "IPM" are displayed alternately. The setting is completed.

Setting value	Description
0	Parameter settings for an induction motor
3003	Parameter settings for an IPM motor MM-CF (rotations per minute)

NOTE

- Performing IPM parameter initialization in the parameter setting mode automatically changes the **Pr.998PM parameter initialization** setting.
- In the initial parameter setting, the capacity same as the inverter capacity is set in **Pr.80 Motor capacity**. To use a motor capacity that is one rank lower than the inverter capacity, set Motor capacity by selecting the mode on the operation panel.
- To set a speed or to display monitored items in frequency, set **Pr.998**. (Refer to Instruction Manual (Detailed).)

◆ Selecting the PM sensorless vector control by Pr.998

- Setting **Pr.998 PM parameter initialization** as shown in the following table activates PM sensorless vector control.

Pr.998 setting	Description	Operation on IPM parameter initialization
0 (initial value)	Parameter settings for an induction motor (frequency)	IPM (IPM) → write "0"
3003	Parameter settings for an IPM motor MM-CF (rotations per minute)	IPM (IPM) → write "3003"
3103	Parameter settings for an IPM motor MM-CF (frequency)	-
8009	Parameter (rotations per minute) settings for an IPM motor other than MM-CF (after tuning)	-
8109	Parameter (frequency) settings for an IPM motor other than MM-CF (frequency)	-
9009	Parameter (rotations per minute) settings for an SPM motor (after tuning)	-
9109	Parameter (frequency) settings for an SPM motor (after tuning)	-

NOTE

- The S-PM geared motor cannot be driven.

◆ PM parameter initialization list

- The parameter settings in the following table are changed to the settings required to perform PM sensorless vector control by selecting PM sensorless vector control with the IPM parameter initialization mode on the operation panel or with **Pr.998 PM parameter initialization**.
- Performing parameter clear or all parameter clear sets back the parameter settings to the settings required to drive an induction motor.

Pr.	Name	Pr.998	Setting: Induction motor 0 (initial value) FM	Induction motor 0 (initial value) CA	PM motor (rotations per minute) 3003 (MM-CF)	PM motor (rotations per minute) 8009 9009 (other than MM-CF)	PM motor (frequency) 3103 (MM-CF)	PM motor (frequency) 8109 9109 (other than MM-CF)	Setting increments 3003, 8009, 9009	Setting increments 0, 3103, 8109, 9109
1	Maximum frequency		120 Hz*1		3000 r/min	Maximum motor rotations per minute*8	200 Hz	Maximum motor frequency*8	1 r/min	0.01 Hz
			60 Hz*2							
4	Multi-speed setting (high speed)		60 Hz	50 Hz	2000 r/min	**Pr.84**	133.33 Hz	**Pr.84**	1 r/min	0.01 Hz
9	Electronic thermal O/L relay		Inverter rated current		Rated motor current (Refer to **page 239**.)	-	Rated motor current (Refer to **page 239**.)	-	0.01 A*1	
									0.1 A*2	
13	Starting frequency		0.5 Hz		8 r/min*5	**Pr.84** × 10%	0.5 Hz*6	**Pr.84** × 10%	1 r/min	0.01 Hz
15	Jog frequency		5 Hz		200 r/min	**Pr.84** × 10%	13.33 Hz	**Pr.84** × 10%	1 r/min	0.01 Hz
18	High speed maximum frequency		120 Hz*1		3000 r/min	-	200 Hz	-	1 r/min	0.01 Hz
			60 Hz*2							
20	Acceleration/deceleration reference frequency		60 Hz	50 Hz	2000 r/min	**Pr.84**	133.33 Hz	**Pr.84**	1 r/min	0.01 Hz
22	Stall prevention operation level		150%*7		150%*7				0.1%	
37	Speed display		0		0				1	
55	Frequency monitoring reference		60 Hz	50 Hz	2000 r/min	**Pr.84**	133.33 Hz	**Pr.84**	1 r/min	0.01 Hz
56	Current monitoring reference		Inverter rated current		Rated motor current (Refer to **page 239**.)	**Pr.859**	Rated motor current (Refer to **page 239**.)	**Pr.859**	0.01 A*1	
									0.1 A*2	
71	Applied motor		0		330*3	-	330*3	-	1	
80	Motor capacity		9999		Motor capacity (MM-CF)*4	-	Motor capacity (MM-CF)*4	-	0.01 kW*1	
									0.1 kW*2	
81	Number of motor poles		9999		8*4	-	8*4	-	1	
84	Rated motor frequency		9999		2000 r/min	-	133.33 Hz	-	1 r/min	0.01 Hz
116	Third output frequency detection		60 Hz	50 Hz	2000 r/min	**Pr.84**	133.33 Hz	**Pr.84**	1 r/min	0.01 Hz
125 (903)	Terminal 2 frequency setting gain frequency		60 Hz	50 Hz	2000 r/min	**Pr.84**	133.33 Hz	**Pr.84**	1 r/min	0.01 Hz
126 (905)	Terminal 4 frequency setting gain frequency		60 Hz	50 Hz	2000 r/min	**Pr.84**	133.33 Hz	**Pr.84**	1 r/min	0.01 Hz
144	Speed setting switchover		4		108	**Pr.81** + 100	8	**Pr.81**	1	
240	Soft-PWM operation selection		1		0				1	
263	Subtraction starting frequency		60 Hz	50 Hz	2000 r/min	**Pr.84**	133.33 Hz	**Pr.84**	1 r/min	0.01 Hz
266	Power failure deceleration time switchover frequency		60 Hz	50 Hz	2000 r/min	**Pr.84**	133.33 Hz	**Pr.84**	1 r/min	0.01 Hz
374	Overspeed detection level		9999		3150 r/min	Maximum motor rotations per minute + 10 Hz*8*9	210 Hz	Maximum motor frequency + 10 Hz*8	1 r/min	0.01 Hz
386	Frequency for maximum input pulse		60 Hz	50 Hz	2000 r/min	**Pr.84**	133.33 Hz	**Pr.84**	1 r/min	0.01 Hz
505	Speed setting reference		60 Hz	50 Hz	133.33 Hz	**Pr.84**	133.33 Hz	**Pr.84**	0.01 Hz	
557	Current average value monitor signal output reference current		Inverter rated current		Rated motor current (Refer to **page 239**.)	**Pr.859**	Rated motor current (Refer to **page 239**.)	**Pr.859**	0.01 A*1	
									0.1 A*2	
820	Speed control P gain 1		60%		30%				1%	
821	Speed control integral time 1		0.333 s		0.333 s				0.001 s	
824	Torque control P gain 1 (current loop proportional gain)		100%		100%				1%	
825	Torque control integral time 1 (current loop integral time)		5 ms		20 ms				0.1 ms	
870	Speed detection hysteresis		0 Hz		8 r/min	0.5 Hz*9	0.5 Hz		1 r/min	0.01 Hz
885	Regeneration avoidance compensation frequency limit value		6 Hz		200 r/min	**Pr.84** × 10%	13.33 Hz	**Pr.84** × 10%	1 r/min	0.01 Hz
893	Energy saving monitor reference (motor capacity)		Inverter rated current		Motor capacity **(Pr.80)**				0.01 kW*1	
									0.1 kW*2	
C14 (918)	Terminal 1 gain frequency (speed)		60 Hz	50 Hz	2000 r/min	**Pr.84**	133.33 Hz	**Pr.84**	1 r/min	0.01 Hz
1121	Per-unit speed control reference frequency		120 Hz*1		3000 r/min	Maximum motor rotations per minute*8	200 Hz	Maximum motor frequency*8	1 r/min	0.01 Hz
			60 Hz*2							

-: Not changed

*1 Initial value for the FR-A820-03160(55K) or lower and FR-A840-01800(55K) or lower
*2 Initial value for the FR-A820-03800(75K) or higher and FR-A840-02160(75K) or higher
*3 Setting **Pr.71 Applied motor** = "333, 334, 8093, 8094, 9093, or 9094" does not change the **Pr.71 Applied motor** setting.
*4 When a value other than "9999" is set, the set value is not changed.
*5 200 r/min when **Pr.788 Low speed range torque characteristic selection** = "0"
*6 **13.33 Hz when Pr.788 Low speed range torque characteristic selection** = "0"
*7 110% for SLD, 120% for LD, 150% for ND, and 200% for HD (Refer to **Pr.570 Multiple rating setting** on **page 162**.)
*8 **Pr.702 Maximum motor frequency** is used as the maximum motor frequency (rotations per minute). When **Pr.702** = "9999 (initial value)", **Pr.84 Rated motor frequency** is used as the maximum motor frequency (rotations per minute).
*9 The setting value is converted from frequency to rotations per minute. (The value after the conversion differs according to the number of motor poles.)

NOTE

- If IPM parameter initialization is performed in rotations per minute (**Pr.998** = "3003, 8009, or 9009"), the parameters not listed in the table and the monitored items are also set and displayed in rotations per minute.

◆ Specification comparison between PM sensorless vector control and induction motor control

Item	PM sensorless vector control (MM-CF)		Induction motor control
Applicable motor	IPM motor MM-CF series (0.5 to 7.0 kW) (Refer to **page 239**.) IPM motors other than MM-CF (tuning required) *1		Induction motor *1
Starting torque	High frequency superposition control	200% (200% for the 1.5 kW or lower with MM-CF, 150% for the 2.0 kW or higher)	200% (FR-A820-00046(0.4K) to FR-A820-00250(3.7K), FR-A840-00023(0.4K) to FR-A840-00126(3.7K)) 150% (FR-A820-00340(5.5K), FR-A840-00170(5.5K) or higher) under Real sensorless vector control and vector control
	Current synchronization operation	50%	
Zero speed	High frequency superposition control	Available (Select the HD rating for zero speed 200%)	Available under Real sensorless vector control and vector control
	Current synchronization operation	Not available	
Carrier frequency	High frequency superposition control	6 kHz (**Pr.72** = "0 to 9"), 10 kHz (**Pr.72** = "10 to 13"), 14 kHz (**Pr.72** = "14 or 15") (6 kHz in a low-speed range of 10 kHz or higher. The frequency of 2 kHz is not selectable.)	FR-A820-03160(55K) or lower, FR-A840-01800(55K) or lower : Any value in the range of 0.75 kHz to 14.5 kHz FR-A820-03800(75K) or higher, FR-A840-02160(75K) or higher : 0.75 kHz to 6 kHz
	Current synchronization operation	2 kHz (**Pr.72** = "0 to 5"), 6 kHz (**Pr.72** = "6 to 9"), 10 kHz (**Pr.72** = "10 to 13"), 14 kHz (**Pr.72** = "14 or 15") (6 kHz in a low-speed range of 10 kHz or higher.)	
Automatic restart after instantaneous power failure	No startup waiting time. Using the regeneration avoidance function or retry function together is recommended.		Startup waiting time exists.
Startup delay	Startup delay of about 0.1 s for magnetic pole position detection.		No startup delay (when online auto tuning is not performed at startup).
Driving by the commercial power supply	Cannot be driven by the commercial power supply.		Can be driven by the commercial power supply. (Other than vector control dedicated motor.)
Operation during coasting	While the motor is coasting, potential is generated across motor terminals.		While the motor is coasting, potential is not generated across motor terminals.
Torque control	Not available		Available under Real sensorless vector control and vector control
Position control	High frequency superposition control	Available (sensorless)	Available under vector control.
	Current synchronization operation	Not available	

*1 The motor capacity is equal to or one rank lower than the inverter capacity. (It must be 0.4 kW or higher.) Using a motor with the rated current substantially lower than the inverter rated current will cause torque ripples, etc. and degrade the speed and torque accuracies. As a reference, select the motor with the rated motor current that is about 40% or higher of the inverter rated current.

NOTE

- Before wiring, make sure that the motor is stopped. Otherwise an electric shock may occur.
- Never connect an IPM motor to the commercial power supply.
- No slippage occurs with an IPM motor because of its characteristic. If an IPM motor, which took over an induction motor, is driven at the same speed as for the induction motor, the running speed of the IPM motor becomes faster by the amount of the induction motor's slippage. Adjust the speed command to run the IPM motor at the same speed as the induction motor, as required.

● Countermeasures against deterioration of the 400 V class motor insulation

When driving a 400 V class motor by the inverter, surge voltages attributable to the wiring constants may occur at the motor terminals, deteriorating the insulation of the motor. When the 400 V class motor is driven by the inverter, consider the following countermeasures:

◆ With induction motor

It is recommended to take one of the following countermeasures:

◆ Rectifying the motor insulation and limiting the PWM carrier frequency according to the wiring length

For the 400 V class motor, use an insulation-enhanced motor.
The Mitsubishi Electric high-efficiency motor SF-HR, the Mitsubishi Electric constant-torque motor SF-HRCA, and the Mitsubishi Electric high-performance energy-saving motor SF-PR are insulation-enhanced motors as standard.
Specifically,

- Order a "400 V class inverter-driven insulation-enhanced motor".
- For the dedicated motor such as the constant-torque motor and low-vibration motor, use an "inverter-driven dedicated motor".
- Set **Pr.72 PWM frequency selection** as indicated below according to the wiring length.

Inverter	Wiring length 50 m or shorter	Wiring length 50 m to 100 m	Wiring length Longer than 100 m
Standard model	15 (14.5 kHz) or lower	9 (9 kHz) or lower	4 (4 kHz) lower
IP55 compatible model			
Separated converter type	6 (6 kHz) or lower	6 (6 kHz) or lower	4 (4 kHz) lower

◆ Suppressing the surge voltage on the inverter side

- For FR-A840-01800(55K) or lower, connect a surge voltage suppression filter (FR-ASF-H/FR-BMF-H) at the output side of the inverter.
- For FR-A840-02160(75K) or higher, connect a sine wave filter (MT-BSL/BSC) at the output side of the inverter.

◆ With PM motor

Set **Pr.72 PWM frequency selection** as indicated below according to the wiring length.

Applicable Inverter	Wiring length	
	50 m or shorter	50 m to 100 m
FR-A840-00023(0.4K), 00038(0.75K)	0 (2 kHz) to 15 (14 kHz)	5 (2 kHz) or lower
Others	0 (2 kHz) to 15 (14 kHz)	9 (6 kHz) or lower

NOTE

- A surge voltage suppression filter (FR-ASF-H/FR-BMF-H) can be used under V/F control and Advanced magnetic flux vector control.
  A sine wave filter (MT-BSL/BSC) can be used under V/F control. Do not use the filters under unspecified controls.

● Application to special motors

◆ Motors with brake

Use the motor with brake having independent power supply for the brake, connect the brake power supply to the inverter primary side power and make the inverter output off using the output stop terminal (MRS) when the brake is applied (motor stop). Rattle may be heard according to the type of the brake in the low speed region but it is not a fault.

◆ Pole changing motor

As this motor differs in rated current from the standard motor, confirm the maximum current of the motor and select the inverter. Be sure to change the number of poles after the motor has stopped. If the number of poles is changed during rotation, the regenerative overvoltage protection circuit may be activated to cause an inverter alarm, coasting the motor to a stop.

◆ Submersible motor

Since the motor rated current is larger than that of the standard motor, make selection of the inverter capacity carefully. In addition, the wiring distance between the motor and inverter may become longer, refer to **page 215** to perform wiring with a cable thick enough. Leakage current may flow more than the land motor, take care when selecting the earth leakage current breaker.

◆ Explosion-proof motor

To drive an explosion-proof type motor, an explosion-proof test of the motor and inverter together is necessary. The test is also necessary when driving an existing explosion-proof motor.
The inverter is a non-explosion proof structure, install it in a safety location.

◆ Geared motor

The continuous operating rotation range of this motor changes depending on the lubrication system and maker. Especially in the case of oil lubrication, continuous operation in the low-speed range only can cause gear seizure. For fast operation at higher than 60 Hz, please consult the motor maker.

◆ Synchronous motor other than PM motor

This motor is not suitable for applications of large load variation or impact, where out-of-sync is likely to occur. Please contact your sales representative when using this motor because its starting current and rated current are greater than those of the standard motor and will not rotate stably at low speed.

◆ Single phase motor

The single phase motor is not suitable for variable operation by the inverter.
For the capacitor starting system, the capacitor may be damaged due to harmonic current flowing to the capacitor. For the split-phase starting system and repulsion starting system, not only output torque is not generated at low speed but it will result in starting coil burnout due to failure of centrifugal force switch inside. Replace with a three-phase motor for use.

Major differences from the FR-A700 series

Item		FR-A700	FR-A800
Control method		V/F control Advanced magnetic flux vector control Real sensorless vector control Vector control (with plug-in option) PM sensorless vector control (IPM motor)	V/F control Advanced magnetic flux vector control Real sensorless vector control Vector control (with plug-in option/control terminal option) PM sensorless vector control (IPM motor/SPM motor)
Added functions		—	USB host function Safety stop function PLC function etc.
Brake transistor (brake resistor usable)		Built in for the FR-A720-0.4K to 22K Built in for the FR-A740-0.4K to 22K	Built in for the FR-A820-00046(0.4K) to 01250(22K) Built in for the FR-A840-00023(0.4K) to 01800(55K)
Maximum output frequency	V/F control	400 Hz	590 Hz
	Advanced magnetic flux vector control	120 Hz	400 Hz
	Real sensorless vector control	120 Hz	400 Hz
	vector control	120 Hz	400 Hz
	PM sensorless vector control	300 Hz	400 Hz
PID control		Turn the X14 signal ON to enable PID control.	When the X14 signal is not assigned, just set a value other than "0" in **Pr.128** to enable PID control. When the X14 signal is assigned, turn the X14 signal ON while **Pr.128** ≠ "0" to enable PID control. The PID pre-charge function and dancer control are added.
Automatic restart after instantaneous power failure		Turn the CS signal ON to enable restart.	CS signal assignment not required. (Restart is enabled with the **Pr.57** setting only.)
Number of motor poles V/F control switching		The V/F switching signal (X18) is valid when **Pr.81** = "12 to 20 (2 to 10 poles)".	**Pr.81** = "12 (12 poles)" X18 is valid regardless of the Pr.81 setting. (The **Pr.81** settings "14 to 20" are not available.)
PTC thermistor input		Input from terminal AU (The function of terminal AU is switched by a switch.)	Input from terminal 2. (The function of terminal 2 is switched by the **Pr.561** setting.)
USB connector		B connector	Mini B connector
Control circuit terminal block		Removable terminal block (screw type)	Removable terminal block (spring clamp type)
Terminal response level		The FR-A800's I/O terminals have better response level than the FR-A700's terminals. By setting **Pr.289 Inverter output terminal filter** and **Pr.699 Input terminal filter**, the terminal response level can be compatible with that of FR-A700. Set to approximately 5 to 8 ms and adjust the setting according to the system.	
PU		FR-DU07 (4-digit LED) FR-PU07	FR-DU08 (5-digit LED) FR-LU08 (LCD operation panel) FR-PU07 (Some functions are limited or not available.) FR-DU07 is not supported.
Plug-in option		Dedicated plug-in options (not interchangeable)	
Communication option		Connected to the connector 3	Connected to the connector 1
Installation size		For standard models, installation size is compatible for all capacities. (Replacement between the same capacities does not require new mounting holes.) For separated converter types, installation size is not compatible. (New mounting holes are required.)	
Converter		Built-in for all capacities	An optional converter unit (FR-CC2) is required for separated converter types.
DC reactor		The 75K or higher comes with a DC reactor (FR-HEL).	For the FR-A820-03800(75K) or higher, the FR-A840-02160(75K) or higher, and when a 75 kW or higher motor is used, select a DC reactor suitable for the applicable motor capacity. (A DC reactor is not included.) Separated converter types (converter unit FR-CC2) and IP55 compatible models have a built-in DC reactor.
Brake unit (75 kW or higher)		FR-BU2, MT-BU5	FR-BU2

◆ Installation precautions

- Removal procedure of the front cover is different. (Refer to the Instruction Manual.)
- Plug-in options of the FR-A700 series are not compatible.
- Operation panel (FR-DU07) cannot be used.

◆ Wiring precautions

- The spring clamp type terminal block has changed to the screw type. Use of blade terminals is recommended.

◆ Instructions for continuous use of the FR-PU07 (parameter unit) manufactured in September 2015 or earlier

- For the FR-A800 series, many functions (parameters) have been added. When setting these parameters, the parameter names and setting ranges are not displayed.
- Only the parameter with the numbers up to "999" can be read and set. The parameters with the numbers after "999" cannot be read or set.
- Many protective functions have been added for the FR-A800 series. These functions are available, but all faults are displayed as "Fault". When the fault history is checked, "ERR" appears. Added faults will not appear on the parameter unit. (However, MT1 to MT3 are displayed as MT.)
- Parameter copy/verification function are not available.

For information on the restrictions on the purchase of the FR-PU07, refer to the Instruction Manual of the FR-PU07.

◆ Copying parameter settings

- The FR-A700 series' parameter settings can be easily copied to the FR-A800 series by using the setup software (FR Configurator2). (Not supported by the setup software FR-SW3-SETUP or older.)

Comparison with the FR-A700 series in functions

Parameter/function	Addition	Modification	Related parameter	Remarks
Maximum frequency		○	**Pr.1** etc.	Max. 590 Hz (Max. 400 Hz under other than V/F control)
Free thermal (electronic thermal O/L relay)	○		**Pr.600 to Pr.604, Pr.692 to Pr.696**	Thermal characteristics can be freely set.
PTC thermistor		○	**Pr.561**	The protection level can be set by parameters.
Strengthened excitation deceleration	○		**Pr.660 to Pr.662**	Loss of the motor is increased to reduce regenerative power.
4 mA input check	○		**Pr.573, Pr.777, Pr.778**	Loss of 4 mA input is detected.
Input terminal filter	○		**Pr.699**	The terminal response can be adjusted.
Output terminal filter	○		**Pr.289**	The terminal response can be adjusted.
Remote output terminal (analog)	○		**Pr.655 to Pr.659**	Optional analog output
Parameter display by group	○		**Pr.Md**	The parameters are displayed in the conventional numerical order in the initial state.
Speed smoothing	○		**Pr.653, Pr.654**	Machine resonance is reduced.
Traverse function	○		**Pr.592 to Pr.597**	Only speed control is available under vector control.
USB host (USB memory connection)	○		**Pr.1049**	Parameter read/copy, data logging, execution of the ladder in the USB (PLC function), etc.
Second PID control	○		**Pr.753 to Pr.758, Pr.1134, Pr.1135, Pr.1140, Pr.1141, Pr.1143 to Pr.1149**	
PID pre-charge function	○		**Pr.760 to Pr.769**	
PID output suspension function	○		**Pr.575 to Pr.577**	
PLC function	○		**Pr.414 to Pr.417, Pr.498, Pr.1150, Pr.1199**	
Maintenance timer		○	**Pr.503, Pr.504, Pr.686 to Pr.689**	Up to three timers can be set.
Fault initiation	○		**Pr.997**	Faults can be initiated.
Multiple rating selection	○		**Pr.570**	The rating can be selected from SLD, LD, ND, or HD.
Fast-response operation selection	○		**Pr.800**	High response of the vector control, real sensorless vector control, and PM sensorless vector control
24 V external power supply input	○		—	Operation is unavailable. (Communication and parameter setting are available.)
Cooling fan operation selection		○	**Pr.244**	Waiting time at stop can be changed.
GOT automatic recognition	○		—	The GOT2000 series is supported.
Optimum excitation control mode	○		**Pr.60**	

Major differences between the standard model (FR-A840) and the separated converter type (FR-A842)

Item	FR-A842	Remarks (FR-A840)
Pr.30 Regenerative function selection	Setting ranges "2, 10, 11, 102, 110, 111" Initial value "10"	Setting ranges "0 to 2, 10, 11, 20, 21, 100, 101, 110, 111, 120, 121" Initial value "0"
Pr.70 Special regenerative brake duty	Without the parameter	
Monitor function (Pr.52, Pr.54, Pr.158, Pr.774 to Pr.776, Pr.992, Pr.1027 to Pr.1034)	Regenerative brake duty Without (Unacceptable)	
Input terminal function selection (Pr.178 to Pr.189)	DC feeding operation permission (X70), DC feeding cancel (X71) Without (Unacceptable)	
Pr.187 MRS terminal function selection	Initial value "10" (X10)	Initial value "24" (MRS)
Output terminal function assignment selection (Pr.190 to Pr.196, Pr.313 to Pr.322)	Instantaneous power failure/undervoltage (IPF), Regenerative brake pre-alarm (RBP), DC current feeding (Y85), Main circuit capacitor life (Y87), Inrush current limit circuit life (Y89), Estimated residual-life of main circuit capacitor (Y248) Without (Unacceptable)	
Pr.192 IPF terminal function selection	Initial value "9999" (No function)	Initial value "2" (IPF)
Inrush current limit circuit life display, Main circuit capacitor life display (Pr.256, Pr.258, Pr.259, Pr.506)	Without the parameter	
Pr.599 X10 terminal input selection	Initial value "1"(NC contact specification)	Initial value "0" (NO contact specification)
Pr.872 Input phase loss protection selection	Without the parameter	
Warning, protective functions	Regenerative brake pre-alarm (RB), Instantaneous power failure (E.IPF), Undervoltage (E.UVT), Input phase loss (E.ILF), Brake transistor alarm detection (E.BE), Inrush current limit circuit fault (E.IOH) Not available	

Major differences between the standard model (FR-A840) and the IP55 compatible model (FR-A846)

Item		FR-A840	FR-A846
Protective structure		Enclose type (IP20): FR-A840-00620(22K) or lower Open type (IP00): FR-A840-00770(30K) or higher	Dust-proof and waterproof type (IP55): All capacities
DC reactor		Optional	Built-in
Internal air circulation fan		Without	With
Protective function		—	Internal fan alarm (FN2), Abnormal internal temperature (E.IAH)
Circuit board coating (conforming to IEC60721-3-3 3C2/3S2)		With / Without (Selectable)	With
Environment	Surrounding air temperature	LD, ND, HD rating: -10°C to +50°C (non-freezing) SLD rating: -10°C to +40°C (non-freezing)	LD, ND rating: -10°C to +40°C (non-freezing)
	Surrounding air humidity	With circuit board coating: 95% RH or less (non-condensing) Without circuit board coating: 90% RH or less (non-condensing)	95% RH or less (non-condensing)
Brake transistor (usable brake resistor)		Built-in for the FR-A820-00046(0.4K) to 01250(22K) Built-in for the FR-A840-00023(0.4K) to 01800(55K)	Without (Brake resistor is not applicable.)
Multiple rating (Pr.570 Multiple rating setting)		SLD, LD, ND (initial setting), HD rating (Setting range: "0 to 3")	LD, ND (initial setting) rating (Setting range: "1 or 2")
Pr.30 Regenerative function selection		Setting range: "0 to 2, 10, 11, 20, 21, 100, 101, 110, 111, 120, or 121"	Setting range: "0, 2, 10, 20, 100, 110, or 120"
Pr.70 Special regenerative brake duty		Available	Not available
Regenerative brake duty (Pr.52, Pr.54, Pr.158, Pr.774 to Pr.776, Pr.992, Pr.1027 to Pr.1034 setting "9")		Available (can be set)	Not available (cannot be set)
Operation panel		FR-DU08: IP40 (except for the PU connector section)	FR-DU08-01: IP55 (except for the PU connector section)

Major differences between the FR-A800 (RS-485 communication model) and the FR-A800-E (Ethernet communication model)

Item	FR-A800 (RS-485 communication model)	FR-A800-E (Ethernet communication model)
Standard equipment	RS-485 terminals	Ethernet connector
Communication	Mitsubishi inverter protocol MODBUS RTU protocol	MODBUS/TCP MELSOFT / FA product connection SLMP iQSS CC-Link IE Field Network Basic
Number of connectable plug-in options	3	2 (initial status)
Optional screw-type terminal block (FR-A8TR)	Can be used.	Cannot be used.

Major differences between the standard inverter and the inverter with parallel operation function

The following functions of the FR-A800 standard inverter are changed in the FR-A842-P.

Function name	Description
FWD and REV keys on the operation panel	The FWD and REV keys on the operation panel of the slave are disabled.
Mitsubishi inverter protocol communication	Since RS-485 terminals are used for RS-485 communication between the master and slave inverters, communication using the Mitsubishi inverter protocol through the RS-485 terminals is not available.
MODBUS RTU protocol communication	The MODBUS RTU protocol communication is not available.
Safety stop function	The safety stop function is not supported.
High speed maximum frequency (Pr.18)	The upper limit of the output frequency is 120 Hz. Even if a value higher than 120 Hz is set as a high speed maximum frequency, the setting is fixed to 120 Hz.
Current monitoring reference (Pr.56)	The initial value of **Pr.56** varies according to the setting in **Pr.1001 Parallel operation selection** as follows. • Inverter rated current × Number of the inverters × 0.8 when **Pr.1001** = "200 or 300" • Inverter rated current × 0.8 when **Pr.1001** = "1 or 2"
Optimum excitation control (Pr.60)	The Optimum excitation control mode (**Pr.60** = "9") is not available.
Reference current (Pr.61)	It is determined by the following formula: Inverter rated current × Number of the inverters × 0.8, when **Pr.61** = "9999 (initial value)"
Applied motor (Pr.71 (Pr.450))	The electronic thermal relay characteristic when **Pr.71** (**Pr.450**) = "8090, 8093, 8094, 9090, 9093, or 9094" is the same as that the standard motor.
Carrier frequency (Pr.72)	The carrier frequency is fixed at 2 kHz. It cannot be changed using parameters.
PU stop selection (Pr.75)	The setting for PU stop selection (**Pr.75**) in the slave inverter is invalid. (The setting of **Pr.75** in the master inverter is applied to the slave inverter.) • When the STOP/RESET key on PU of the slave inverter is pressed while **Pr.75** of the master inverter = "14 to 17 or 114 to 117", the motor decelerates to stop regardless of the inverter's operation mode and the warning "PS" (PU stop) indication appears on the slave inverter. The "PS" can be reset on the master inverter. • When **Pr.75** of the master inverter = "0 to 3, 100 to 103", the motor does not stop by pressing the STOP/RESET key on the PU of the slave inverter even if the inverters are in the PU operation mode.
Auto tuning setting/status (Pr.96)	Tuning is not available although "101" (offline tuning with motor rotation) is set in **Pr.96**.
PID action selection (Pr.128 (Pr.753))	When **Pr.128** (**Pr.753**) of the slave inverter ≠ "2000, 2001, 2010, or 2011" , the PID action selection function of the slave inverter is invalid.
Bypass selection at a fault (Pr.138)	Setting "1" in **Pr.138** of the master inverter enables automatic switchover to commercial power supply operation when a protective function (E.OHT or E.CPU) is activated in the slave inverter. Install a thermal relay to the master inverter to protect the motor from overheating.
Output current detection level (Pr.150), Zero current detection level (Pr.152)	The result of the following formula corresponds to "100" (100%) of **Pr.150** (Output current detection level) and **Pr.152** (Zero current detection level) in the master inverter: Inverter rated current × Number of the inverters × 0.8.
Fast-response current limit (Pr.156)	This function is not available.
Frequency setting / key lock operation selection (Pr.161)	Regardless of the **Pr.161** setting of the slave inverter, the setting dial frequency setting mode and setting dial potentiometer mode are disabled on the slave inverter. (The function to lock the operation panel keys is available.)
Automatic restart after instantaneous power failure selection (Pr.162)	Even when a value other than "3 or 13" is set in **Pr.162**, a frequency search (reduced impact restart) is performed.
Slip compensation (Pr.245 to Pr.247)	To use the slip compensation function, set the motor capacity in **Pr.80** (**Pr.453**) of the master in advance.
Self power management selection (Pr.248)	When "2" is set in **Pr.248** of the master inverter, the MC1 signal turns OFF when the circuit failure protective function or E.PA1/E.PA2 (Parallel operation slave 1 fault / Parallel operation slave 2 fault) is activated.
High-speed setting maximum current (Pr.271), Middle-speed setting minimum current (Pr.272)	During operation with the X19 signal ON, when the average current of the current averaging range becomes equal to or less than the result of the following formula 1: Inverter rated current × Number of the inverters × 0.8 × **Pr.271** setting (%), the maximum frequency is automatically defined as the setting of **Pr.4 Multi-speed setting (high speed)**. During operation with the X19 signal ON, when the average current of the current averaging range becomes equal to or more than the result of the following formula 2: Inverter rated current × Number of the inverters × 0.8 × **Pr.272** setting (%), the maximum frequency is automatically defined as the setting of **Pr.5 Multi-speed setting (middle speed)**. When the average current is more than the result of the formula 1 and less than the result of the formula 2, linear compensation is performed.
Stop mode selection at communication error (Pr.502), Operation frequency during communication error (Pr.779)	The settings of **Pr.502** and **Pr.779** does not affect communication between the inverters via the RS-485 terminals. (The setting affects only communication via the communication option.)
PU mode operation command source selection (Pr.551)	The command source is the PU connector when **Pr.551** = "1" and the inverters are in the PU operation mode. When a USB memory device is connected to the USB connector, the command source is the USB connector.
Multiple rating setting (Pr.570)	The SLD and HD ratings are not supported. When "0 or 3" is set in **Pr.570**, the ND rating is applied.
Control method selection (Pr.800 (Pr.451))	The PM sensorless vector control is not available. When **Pr.800** (**Pr.451**) = "13, 14, 113, or 114", Real sensorless vector control is applied.
Fast-response operation (Pr.800 (Pr.451))	Even if the fast-response operation is selected in **Pr.800** (**Pr.451**), the normal-response operation is applied.

Warranty

When using this product, make sure to understand the warranty described below.

1. Warranty period and coverage

We will repair any failure or defect (hereinafter referred to as "failure") in our FA equipment (hereinafter referred to as the "Product") arisen during warranty period at no charge due to causes for which we are responsible through the distributor from which you purchased the Product or our service provider. However, we will charge the actual cost of dispatching our engineer for an on-site repair work on request by customer in Japan or overseas countries. We are not responsible for any on-site readjustment and/or trial run that may be required after a defective unit are repaired or replaced.

[Term]

The term of warranty for Product is twelve months after your purchase or delivery of the Product to a place designated by you or eighteen months from the date of manufacture whichever comes first ("Warranty Period"). Warranty period for repaired Product cannot exceed beyond the original warranty period before any repair work.

[Limitations]

(1) You are requested to conduct an initial failure diagnosis by yourself, as a general rule. It can also be carried out by us or our service company upon your request and the actual cost will be charged.
However, it will not be charged if we are responsible for the cause of the failure.
(2) This limited warranty applies only when the condition, method, environment, etc. of use are in compliance with the terms and conditions and instructions that are set forth in the instruction manual and user manual for the Product and the caution label affixed to the Product.
(3) Even during the term of warranty, the repair cost will be charged on you in the following cases;
1) a failure caused by your improper storing or handling, carelessness or negligence, etc., and a failure caused by your hardware or software problem
2) a failure caused by any alteration, etc. to the Product made on your side without our approval
3) a failure which may be regarded as avoidable, if your equipment in which the Product is incorporated is equipped with a safety device required by applicable laws and has any function or structure considered to be indispensable according to a common sense in the industry
4) a failure which may be regarded as avoidable if consumable parts designated in the instruction manual, etc. are duly maintained and replaced
5) any replacement of consumable parts (condenser, cooling fan, etc.)
6) a failure caused by external factors such as inevitable accidents, including without limitation fire and abnormal fluctuation of voltage, and acts of God, including without limitation earthquake, lightning and natural disasters
7) a failure generated by an unforeseeable cause with a scientific technology that was not available at the time of the shipment of the Product from our company
8) any other failures which we are not responsible for or which you acknowledge we are not responsible for

2. Term of warranty after the stop of production

(1) We may accept the repair at charge for another seven (7) years after the production of the product is discontinued. The announcement of the stop of production for each model can be seen in our Sales and Service, etc.
(2) Please note that the Product (including its spare parts) cannot be ordered after its stop of production.

3. Service in overseas

Our regional FA Center in overseas countries will accept the repair work of the Product; however, the terms and conditions of the repair work may differ depending on each FA Center. Please ask your local FA center for details.

4. Exclusion of loss in opportunity and secondary loss from warranty liability

Regardless of the gratis warranty term, Mitsubishi shall not be liable for compensation to:
(1) Damages caused by any cause found not to be the responsibility of Mitsubishi.
(2) Loss in opportunity, lost profits incurred to the user by Failures of Mitsubishi products.
(3) Special damages and secondary damages whether foreseeable or not, compensation for accidents, and compensation for damages to products other than Mitsubishi products.
(4) Replacement by the user, maintenance of on-site equipment, start-up test run and other tasks.

5. Change of Product specifications

Specifications listed in our catalogs, manuals or technical documents may be changed without notice.

6. Application and use of the Product

(1) For the use of our product, its applications should be those that may not result in a serious damage even if any failure or malfunction occurs in product, and a backup or fail-safe function should operate on an external system to product when any failure or malfunction occurs.

(2) Our product is designed and manufactured as a general purpose product for use at general industries.
Therefore, applications substantially influential on the public interest for such as atomic power plants and other power plants of electric power companies, and also which require a special quality assurance system, including applications for railway companies and government or public offices are not recommended, and we assume no responsibility for any failure caused by these applications when used.
In addition, applications which may be substantially influential to human lives or properties for such as airlines, medical treatments, railway service, incineration and fuel systems, man-operated material handling equipment, entertainment machines, safety machines, etc. are not recommended, and we assume no responsibility for any failure caused by these applications when used.
We will review the acceptability of the abovementioned applications, if you agree not to require a specific quality for a specific application. Please contact us for consultation.

Mitsubishi Electric's global FA network delivers reliable technologies and security around the world.

Production base · Development center · Global FA Center · Mechatronics showroom · Mitsubishi Electric sales office

Russia FA Center
MITSUBISHI ELECTRIC EUROPE B.V.
Russian Branch St.Petersburg office

Germany FA Center
MITSUBISHI ELECTRIC EUROPE B.V.
Germany Branch

UK FA Center
MITSUBISHI ELECTRIC EUROPE B.V.
UK Branch

Czech Republic FA Center
MITSUBISHI ELECTRIC
EUROPE B.V.Czech office

Italy FA Center
Mitsubishi Electric
Europe B.V. Italian Branch

Europe FA Center
MITSUBISHI ELECTRIC
EUROPE B.V.
Polish Branch

Turkey FA Center
Mitsubishi Electric
Turkey A.Ş. Ümraniye

India Gurgaon FA Center
MITSUBISHI ELECTRIC INDIA PVT.LTD.
Gurgaon Head Office

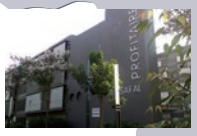

India Ahmedabad FA Center
MITSUBISHI ELECTRIC INDIA PVT.LTD.
Ahmedabad Branch

India Pune FA Center
MITSUBISHI ELECTRIC INDIA PVT.LTD.
Pune Branch

Indonesia FA Center
PT.MITSUBISHI
ELECTRIC INDONESIA

India Bangalore FA Center
MITSUBISHI ELECTRIC INDIA PVT.LTD.
Bangalore Branch

India Coimbatore FA Center
MITSUBISHI ELECTRIC INDIA PVT. LTD.
Coimbatore Branch

India Chennai FA Center
MITSUBISHI ELECTRIC INDIA PVT.LTD.
Chennai Branch

Available services

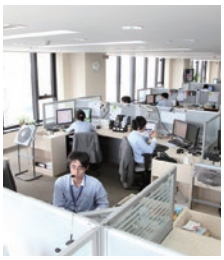

Technical consultation (engineering)
Our Japanese and/or local staff offer technical advice, and can also propose the best products and systems for a customer's specific application needs.

Showrooms
The latest automation technologies, including programmable controllers, HMIs, inverters, servo systems, and industrial automation machinery such as electrical-discharge machines, laser processing machines, CNCs, and industrial robots can be seen at Mitsubishi Electric showrooms.

Training
From basic operations to applied programming, our training schools offer regular courses that use actual machines. We also offer customized training programs and onsite training sessions.

Technical support
Our FA centers and service shops work together to provide repairs, onsite engineering support, and spare parts.

Repairs
Handle repairs of our FA products.

Service bases are established around the world to provide the same services as in Japan globally. Overseas bases are opening one after another to support our customers' business expansion.

Area	Our overseas	FA centers
EMEA	26	7
China	17	4
Asia	31	13
Americas	15	6
Others	1	0
Total	90	30

·As of July 2017

Thailand FA Center
MITSUBISHI ELECTRIC FACTORY AUTOMATION（THAILAND）CO.,LTD

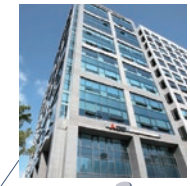

Korea FA Center
MITSUBISHI ELECTRIC AUTOMATION KOREA CO.,LTD.

MITSUBISHI ELECTRIC CORPORATION
Factory Automation Systems Group

Taichung FA Center
MITSUBISHI ELECTRIC TAIWAN CO.,LTD

Taipei FA Center
SETSUYO ENTERPRISE CO.,LTD

Ho Chi Minh FA Center
MITSUBISHI ELECTRIC VIETNAM COMPANY LIMITED

Hanoi FA center
Mitsubishi Electric Vietnam Company Limited Hanoi Branch

ASEAN FA Center
MITSUBISHI ELECTRIC ASIA PTE.LTD.

North America FA Center
MITSUBISHI ELECTRIC AUTOMATION,INC.

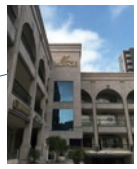

Mexico Monterrey FA Center
Monterrey Office, Mitsubishi Electric Automation, Inc.

Mexico FA Center
Querétaro Office, Mitsubishi Electric Automation, Inc.

Mexico City FA Center
Mexico FA Center
Mexico Branch, Mitsubishi Electric Automation, Inc.

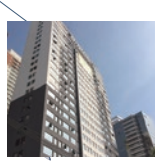

Brazil FA Center
Mitsubishi Electric do Brasil Comércio e Serviços Ltda.

Brazil Votorantim FA Center
MELCO CNC do Brasil Comércio e Serviços S.A.

China

Beijing FA Center
MITSUBISHI ELECTRIC AUTOMATION (CHINA)LTD.

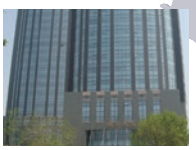

Tianjin FA Center
MITSUBISHI ELECTRIC AUTOMATION (CHINA)LTD.

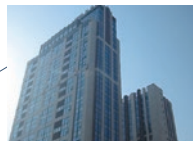

Shanghai FA Center
MITSUBISHI ELECTRIC AUTOMATION (CHINA) LTD.

Guangzhou FA Center
MITSUBISHI ELECTRIC AUTOMATION (CHINA)LTD.

This solution solves customers' issues and concerns by enabling visualization and analysis that lead to improvements and increase availability at production sites.

Utilizing our FA and IT technologies and collaborating with e-F@ctory Alliance partners, we reduce the total cost across the entire supply chain and engineeringchain, and support the improvement initiatives and one-step-ahead manufacturing of our customers.

e-F@ctory

FA integrated solutions reduce total cost

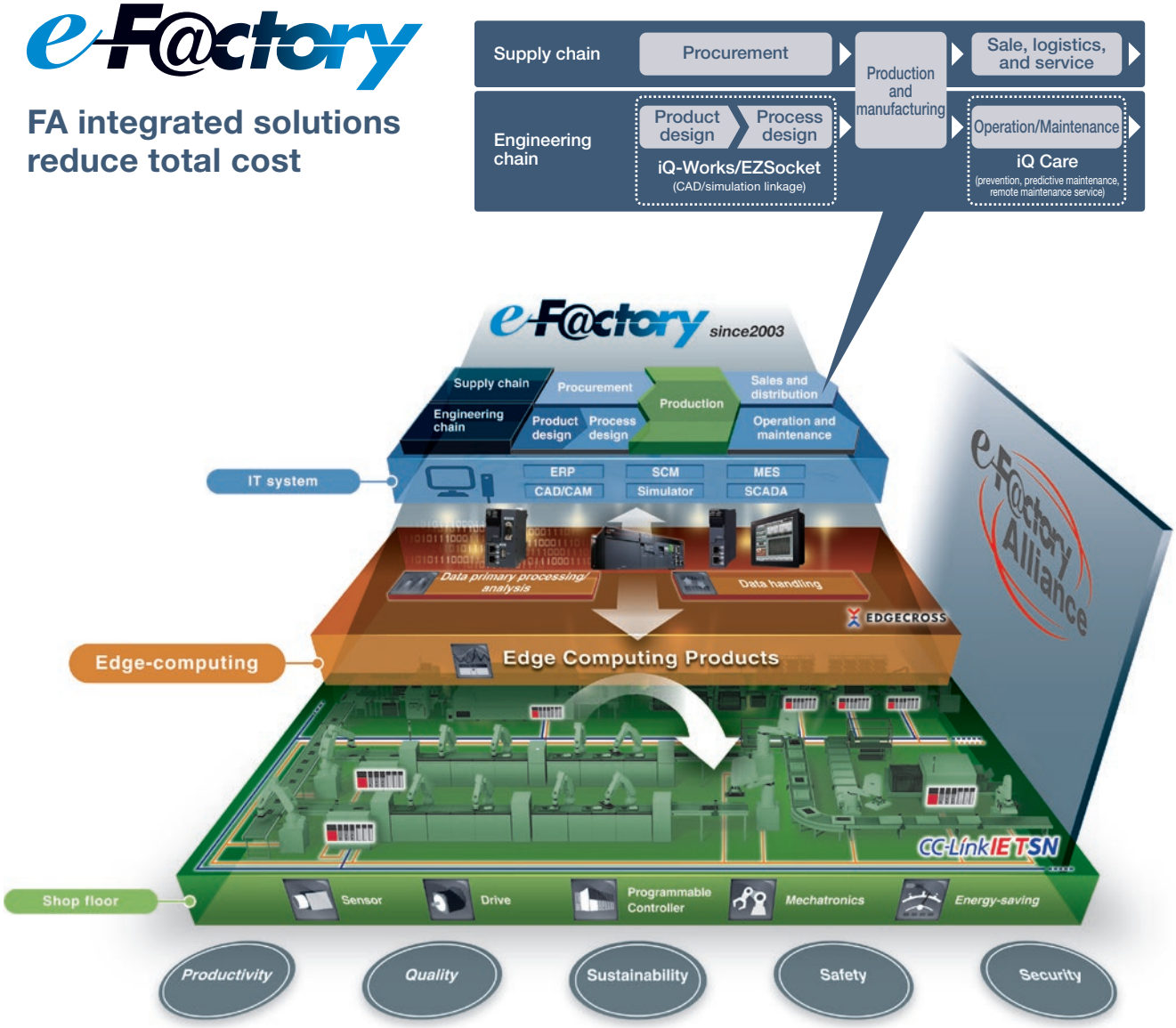

Overall production information is captured in addition to energy information, enabling the realization of efficient production and energy use (energy savings).

•Trademarks

DeviceNet is a trademark of the ODVA, PROFIBUS is a trademark of the PROFIBUS User Organization, and MODBUS is a registered trademark of SCHNEIDER ELECTRIC USA, INC.
Ethernet is a registered trademark of Fuji Xerox Corporation in Japan.
Windows and Windows Vista are registered trademarks of Microsoft Corporation in the United States and other countries.
Other company and product names herein are the trademarks and registered trademarks of their respective owners.

⚠ Safety Warning

To ensure proper use of the products listed in this catalog, please be sure to read the instruction manual prior to use.

YOUR SOLUTION PARTNER

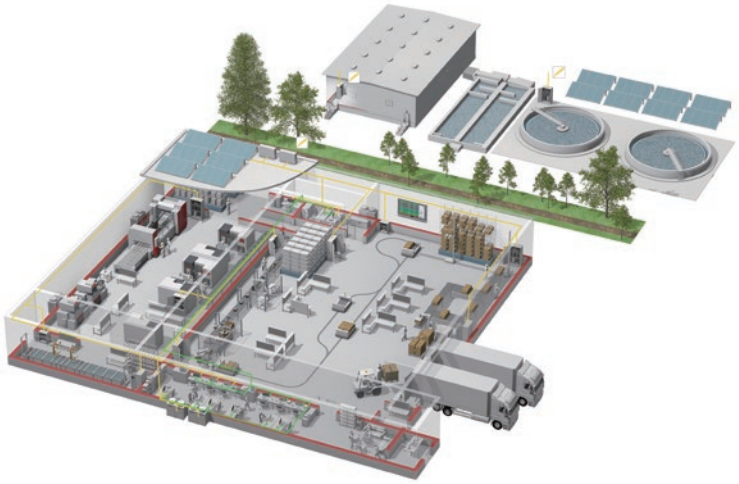

Mitsubishi Electric offers a wide range of automation equipment from PLCs and HMIs to CNC and EDM machines.

Low voltage: MCCB, MCB, ACB

Medium voltage: VCB, VCC

Power monitoring, energy management

Compact and Modular Controllers

Inverters, Servos and Motors

Visualisation: HMIs

Numerical Control (NC)

Robots: SCARA, Articulated arm

Processing machines: EDM, Lasers, IDS

Transformers, Air conditioning, Photovoltaic systems

A NAME TO TRUST

Since its beginnings in 1870, some 45 companies use the Mitsubishi name, covering a spectrum of finance, commerce and industry.

The Mitsubishi brand name is recognized around the world as a symbol of premium quality.

Mitsubishi Electric Corporation is active in space development, transportation, semi-conductors, energy systems, communications and information processing, audio visual equipment and home electronics, building and energy management and automation systems, and has 237 factories and laboratories worldwide in over 121 countries.

This is why you can rely on Mitsubishi Electric automation solution - because we know first hand about the need for reliable, efficient, easy-to-use automation and control in our own factories.

As one of the world's leading companies with a global turnover of over 4 trillion Yen (over $40 billion), employing over 100,000 people, Mitsubishi Electric has the resource and the commitment to deliver the ultimate in service and support as well as the best products.

LENNTECH
WATER TREATMENT SOLUTIONS
info@lenntech.com Tel. +31-152-610-900
www.lenntech.com Fax. +31-152-616-289

* Not all products are available in all countries.

Mitsubishi Electric Corporation Nagoya Works
is a factory certified for ISO 14001
(standards for environmental management
systems).

MITSUBISHI ELECTRIC CORPORATION
HEAD OFFICE: TOKYO BLDG., 2-7-3, MARUNOUCHI, CHIYODA-KU, TOKYO 100-8310, JAPAN

L(NA)06075ENG-H(1912)MEE