VXC-F Flanged submersible pumps

VORTEX

LENNTECH
WATER TREATMENT SOLUTIONS

Sewage
Civil use
Industrial use

※ **High quality materials and robustness assure superior performance and reliability**

PERFORMANCE RANGE

- Flow rate up to **1250 l/min** (75 m^3/h)
- Head up to **20 m**

INSTALLATION AND USE

The **VXC-F** series is constructed from thick cast iron, offering exceptional robustness, abrasion resistance, and longevity.
Featuring VORTEX-type impellers, these pumps are designed to drain **wastewater, sludge-mixed water, liquids with air or gas, as well as activated and putrid sludge**.
Recommended for stationary installation in sewers, tunnels, shafts, underground parking facilities, and specialized manholes.

APPLICATION LIMITS

- Depth below water level up to **10 m** (with an appropriately sized power cable)
- Liquid temperature up to **+40 °C**
- Suspended solids transfer:
  – up to **Ø 50 mm** for **VXC /50-F**
  – up to **Ø 65 mm** for **VXC /65-F**
- **Continuous operation of the pump even when completely uncovered.**

INCLUDES

※ Power cable length **10 m**
※ Float switch (exclusive to single-phase models)
※ Switchbox compatible with single-phase versions

AVAILABLE UPON REQUEST

※ Coupling foot kit
※ **QES** control panel for three-phase pumps
※ Different voltage requirements 60 Hz frequency

WARRANTY

※ **The warranty for three-phase models remains valid only if the motor's built-in thermal protector is properly connected to the control panel. This connection is essential for the warranty's applicability.**

PATENTS - TRADE MARKS - MODELS

- Patent No. IT0001428923

CURVES AND PERFORMANCE DATA

50 Hz

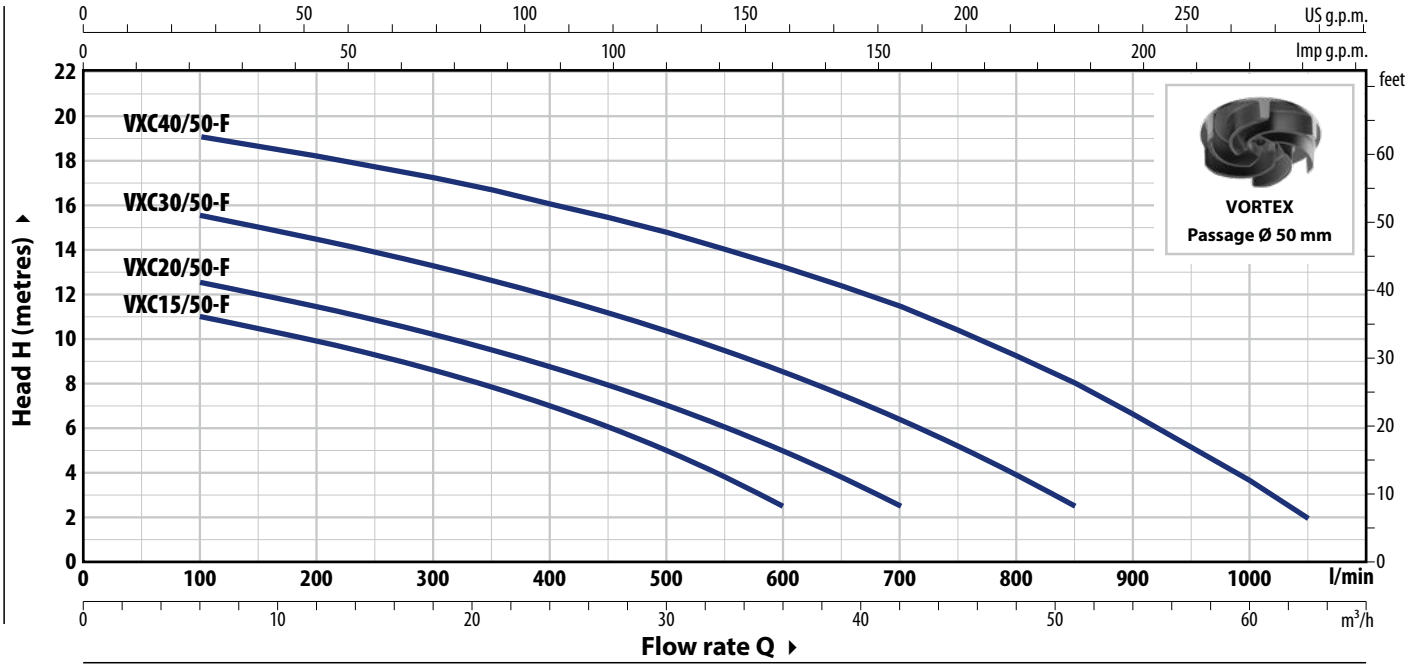

TYPE		POWER (P2)		Q m³/h	0	6	12	18	24	30	36	42	51	60	63
Single-phase	**Three-phase**	**kW**	**HP**	Q l/min	**0**	**100**	**200**	**300**	**400**	**500**	**600**	**700**	**850**	**1000**	**1050**
VXCm 15/50-F	**VXC 15/50-F**	1.1	1.5	H metres	12	11	10	8.6	7	5	2.5				
VXCm 20/50-F	**VXC 20/50-F**	1.5	2		13.5	12.5	11.4	10.2	8.7	7	5	2.5			
VXCm 30/50-F	**VXC 30/50-F**	2.2	3		16.5	15.5	14.4	13.2	12	10.3	8.5	6.4	2.5		
–	**VXC 40/50-F**	3	4		20	19	18	17	16	14.7	13.2	11.4	8	3.6	2

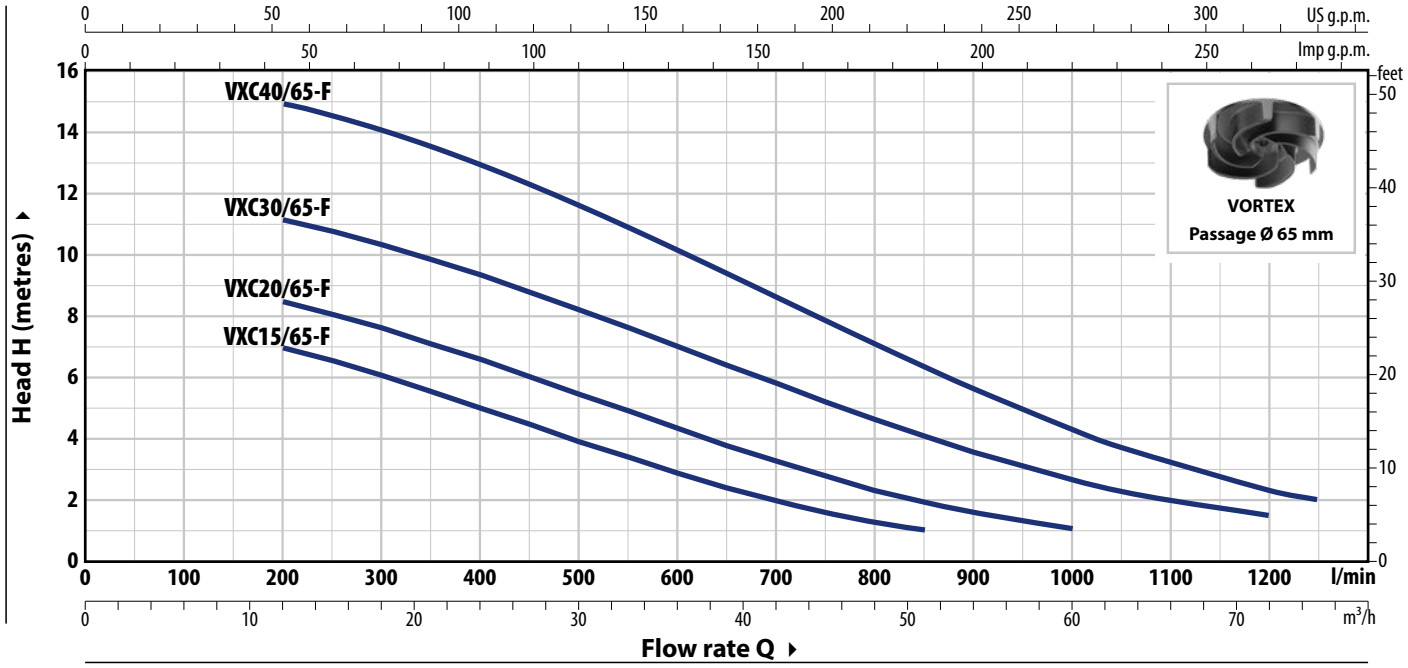

TYPE		POWER (P2)		Q m³/h	0	12	24	36	42	51	60	63	72	75
Single-phase	**Three-phase**	**kW**	**HP**	Q l/min	**0**	**200**	**400**	**600**	**700**	**850**	**1000**	**1050**	**1200**	**1250**
VXCm 15/65-F	**VXC 15/65-F**	1.1	1.5	H metres	8	7	5	2.8	2	1				
VXCm 20/65-F	**VXC 20/65-F**	1.5	2		9.5	8.5	6.6	4.3	3.3	2	1			
VXCm 30/65-F	**VXC 30/65-F**	2.2	3		12	11	9.3	7	5.8	4	2.6	2.3	1.5	
–	**VXC 40/65-F**	3	4		15.5	15	13	10	8.6	6.3	4.3	3.7	2.3	2

Q = Flow rate **H** = Total manometric head

Performance curves comply with EN ISO 9906 Grade 3B tolerance limits.

ABSORPTION

TYPE **Single-phase**	VOLTAGE **230 V**
VXCm 15/50-F	8.5 A
VXCm 20/50-F	9.0 A
VXCm 30/50-F	12.0 A
VXCm 15/65-F	8.5 A
VXCm 20/65-F	9.0 A
VXCm 30/65-F	12.0 A

TYPE **Three-phase**	VOLTAGE **400 V**
VXC 15/50-F	3.4 A
VXC 20/50-F	3.7 A
VXC 30/50-F	5.0 A
VXC 40/50-F	6.2 A
VXC 15/65-F	3.4 A
VXC 20/65-F	3.7 A
VXC 30/65-F	5.0 A
VXC 40/65-F	6.2 A

DIMENSIONS AND WEIGHT

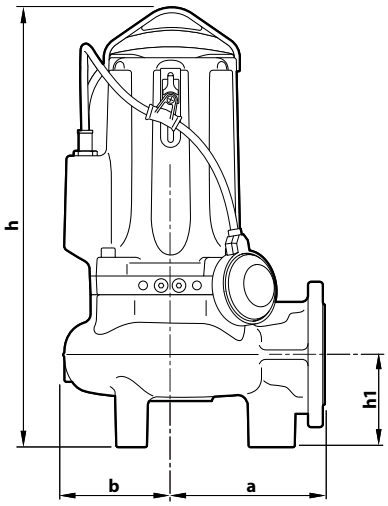

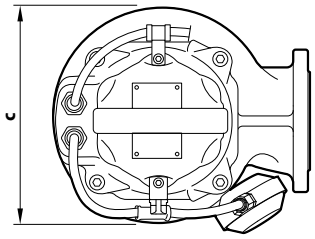

TYPE		Passage of solid bodies	DIMENSIONS mm					kg	
Single-phase	**Three-phase**		a	b	c	h	h1	1~	3~
VXCm 15/50-F	**VXC 15/50-F**	**50 mm**	170	119	242	487	102	43.6	42.0
VXCm 20/50-F	**VXC 20/50-F**							44.6	43.3
VXCm 30/50-F	**VXC 30/50-F**					513 | 487		49.5	45.5
–	**VXC 40/50-F**					513		–	50.0
VXCm 15/65-F	**VXC 15/65-F**	**65 mm**	210	120	246	521	123	46.0	44.7
VXCm 20/65-F	**VXC 20/65-F**							47.1	46.0
VXCm 30/65-F	**VXC 30/65-F**					547 | 521		51.8	48.0
–	**VXC 40/65-F**					547		–	51.8

PORT FLANGE

TYPE	FLANGE	F	K	D	L	HOLES	
			mm	mm	mm	N°	Ø (mm)
VXC /50-F	**DN65** (PN10)	**2½"**	145	185	160	4	18
VXC /65-F	**DN80** (PN10)	**3"**	160	200	180	8	18

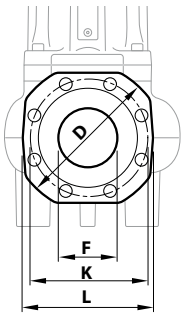

MATERIALS AND COMPONENTS

1	**Pump body**	Cast iron with cataphoresis treatment with flanged and threaded ISO 228/1 port
2	**Impeller**	Cast iron VORTEX type with cataphoresis treatment
3	**Motor holder**	Cast iron with cataphoresis treatment
4	**Motor bracket**	Cast iron with cataphoresis treatment
5	**Motor shaft**	Stainless steel **AISI 431**

6 Double mechanical seal with interposed oil chamber

Seal	Shaft	Location	Materials
STA-22	Ø 22 mm	Motor side	Ceramic / Graphite / NBR
STA-20	Ø 20 mm	Pump side	Silicon carbide/Silicon carbide/NBR

7 Electric Motor

VXCm-F: single-phase 230 V - 50 Hz
with thermal motor protection

VXC-F: three-phase 400 V - 50 Hz
※ with winding integrated thermal motor protection (to be connected to the switchboard supplied on request)

– Insulation: class F
– Protection rating: IP X8

8 Power cord

※ 10 metres 'H07 RN-F' type

9 Switchboard
(exclusive to single-phase models)

With capacitor and manual reset motor protection switch

10 Float switch
(exclusive to single-phase models)

Power switchboard
(standard for single-phase versions)

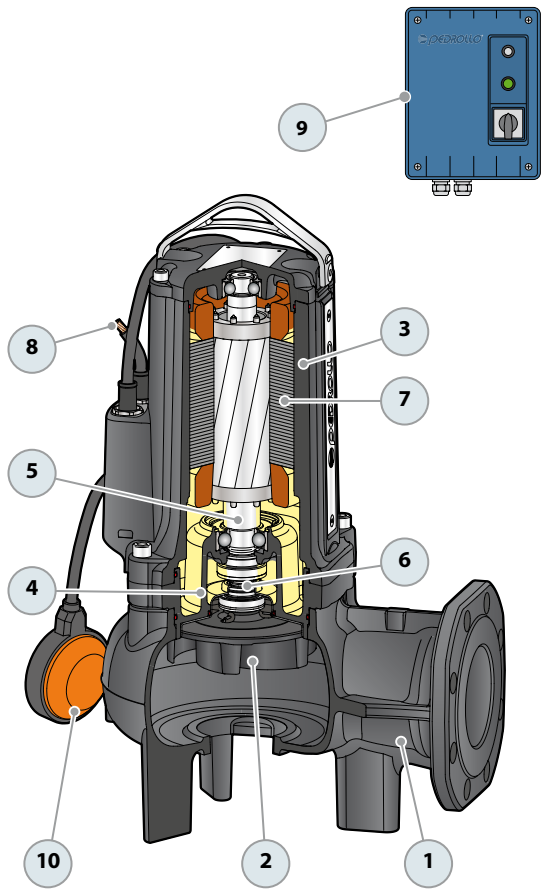

OPTIONAL - Support base
(Cod. ASSBAVM)

LENNTECH
WATER TREATMENT SOLUTIONS
info@lenntech.com Tel. +31-152-610-900
www.lenntech.com Fax. +31-152-616-289

SEWAGE LIFTING SYSTEM VXC-F - MC-F

VERSION WITH HORIZONTAL DELIVERY AND ¾" GUIDE PIPES

For **VXC /50-F, MC /50-F**	Code ASSVXCF051	**DN 2"**

※ **Kit consisting of:**

Coupling foot

Slide rail with screws and gasket

Support for guide tubes

VERSION WITH VERTICAL DELIVERY AND ¾" GUIDE PIPES

For **VXC /50-F, MC /50-F**	Code ASSVXCF051V	**DN 2½"**
For **VXC /65-F, MC /65-F**	Code ASSVXCF071V	**DN 3"**

VERSION WITH VERTICAL DELIVERY AND 2" GUIDE TUBES

For **VXC /50-F, MC /50-F**	Code ASSVXCF0704V	**DN 3"**
For **VXC /65-F, MC /65-F**	Code ASSVXCF0705V	

※ **Kit consisting of:**

Coupling foot complete with counterflange

Slide rail with screws and gasket

Support for guide tubes

● ACCESSORIES AVAILABLE FOR ORDER

RUNNING GUIDE

※ For VXC /50-F, MC /50-F with guide tubes Ø ¾".	Code ASSFL0017
※ For VXC /65-F, MC /65-F with guide tubes Ø ¾".	Code ASSFL0018
※ For VXC /50-F, MC /50-F with guide tubes Ø 2".	Code ASSFL071
※ For VXC /65-F, MC /65-F with guide tubes Ø 2".	Code ASSFL072

Complete with screws and seals

for Ø ¾" guide tubes

for guide tubes Ø 2"

INTERMEDIATE GUIDE TUBE SUPPORT

※ For Ø ¾" guide tubes	Code 859SV340INTFA
※ For guide tubes Ø 2"	Code 859SV349INTFA

For reasons of stability, interpose a support:
– every 2 metres with ¾ " guide pipes (mandatory)
– every 3 metres with 2" guide tubes (recommended)

for Ø ¾" guide tubes

for guide tubes Ø 2"

GUIDE TUBE (AISI 304 stainless steel)

※ 2 metres Ø ¾" guide tube	Code 54SARTG0052F
※ 3 metres Ø ¾" guide tube	Code 54SARTG0053F
※ 6 metres Ø ¾" guide tube	Code 54SARTG0056F
※ 3 metres Ø 2" guide tube	Code 54SARTG0063F
※ 6 metres guide tube Ø 2"	Code 54SARTG0066F

DIMENSIONS (Version with horizontal outlet)

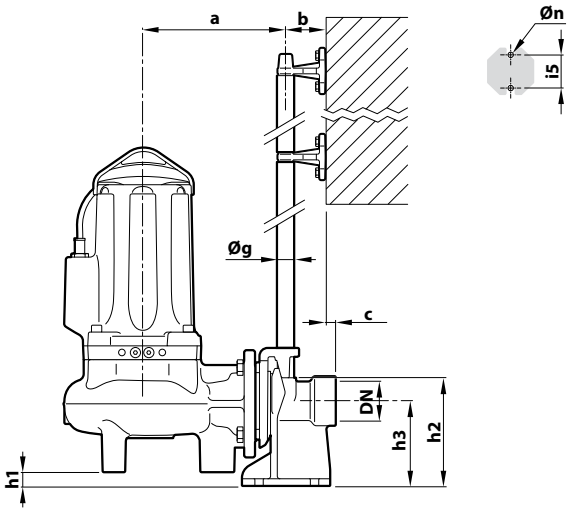

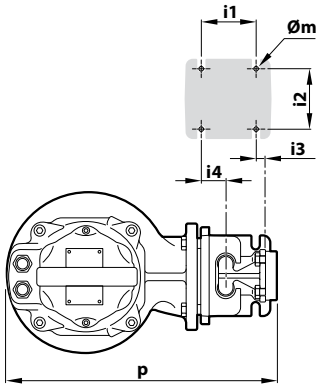

TYPE	Solid bodies mm	PORT DN	DIMENSIONS mm														
			a	b	c	p	h1	h2	h3	i1	i2	i3	i4	i5	Øg	Øm	Øn
VXC /50 -F MC /50 -F	Ø 50	2"	216	61	17	412	28	165	130	85	94	16	40	50	¾"	12	11

DIMENSIONS (Version with vertical delivery)

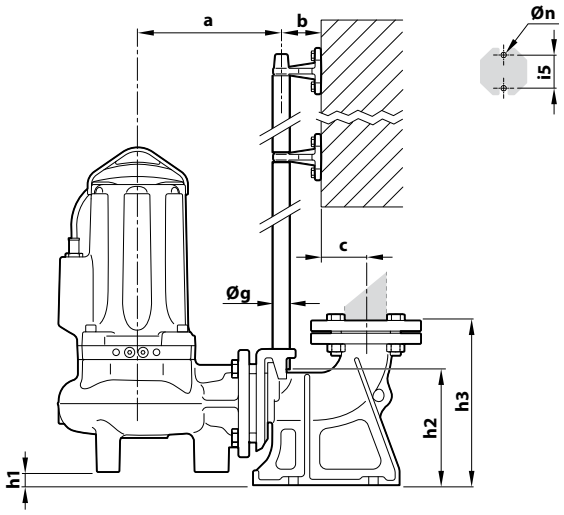

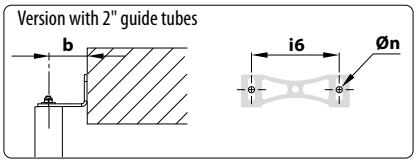

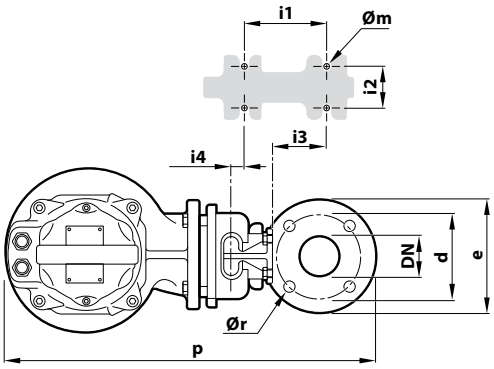

Version with ¾" guide tubes

TYPE	Solid bodies mm	PORT DN	DIMENSIONS mm																	
			a	b	c	d	e	p	h1	h2	h3	i1	i2	i3	i4	i5	Øg	Øm	Øn	Ør
VXC /50 -F MC /50 -F	Ø 50 mm	2½"	213	61	52	125	165	526	25.5	164	215	120	72	62	3	50	¾"	14	11	18
VXC /65 -F MC /65 -F	Ø 65 mm	3" (PN6)	253	61	69	150	190	598	46	216	279	130	112	84	15	50	¾"	14	11	18

Version with 2" guide tubes

TYPE	Solid bodies mm	PORT DN	DIMENSIONS mm																		
			a	b	c	d	e	p	h1	h2	h3	i1	i2	i3	i4	i5	i6	Øg	Øm	Øn	Ør
VXC /50 -F MC /50 -F	Ø 50 mm	3" (PN10)	320	85	95	160	200	718	105	265	392	250	150	35	-130	–	187	2"	22	13.5	18
VXC /65 -F MC /65 -F	Ø 65 mm	3" (PN10)	359	85	95	160	200	760	84	256	392	250	150	35	-130	–	187	2"	22	13.5	18