111211-00

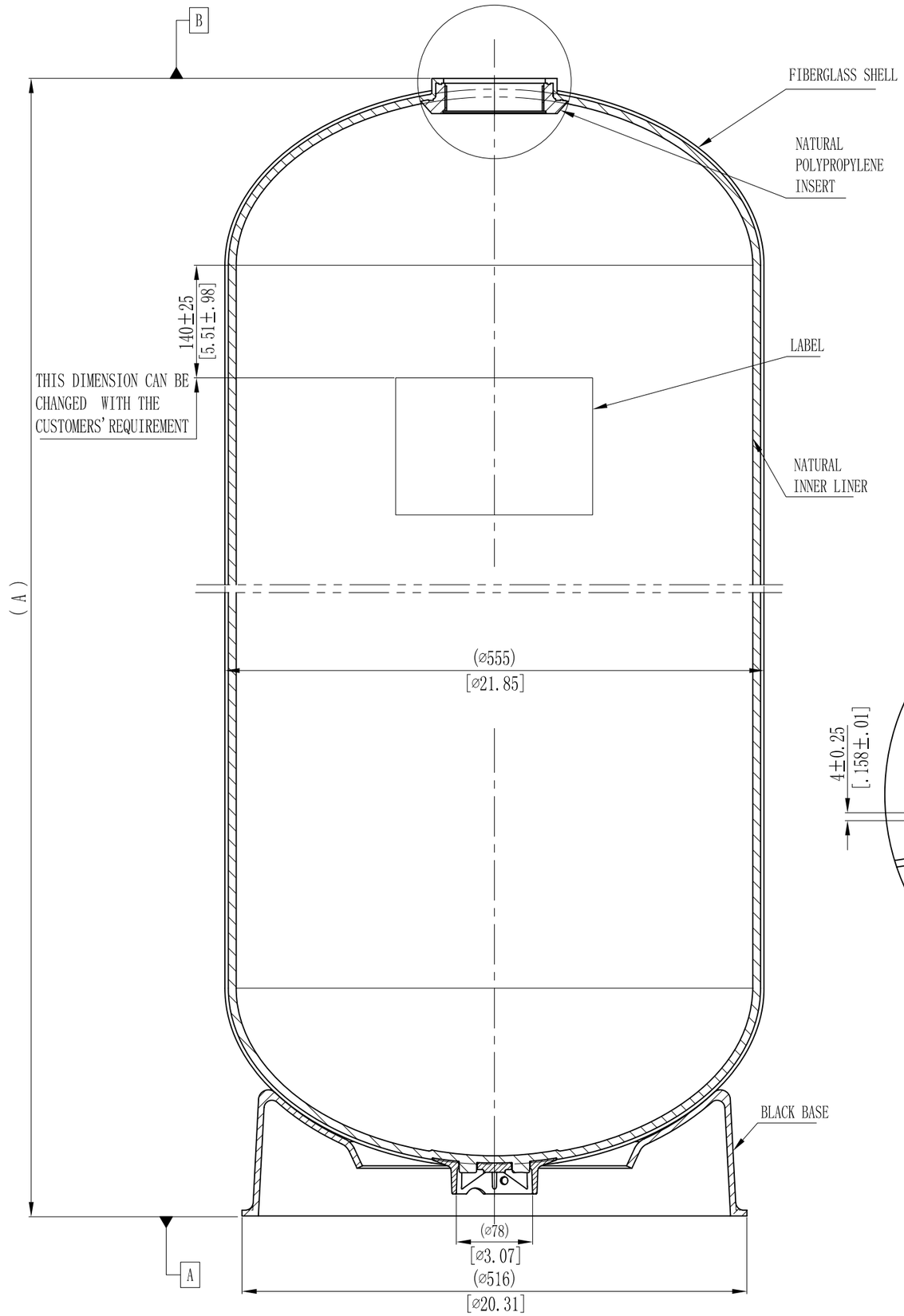

MODEL	A				VOLUME			DOME VOLUME			WEIGHT	
	mm	inch	+/- mm	+/- inch	liters	U.S.gal	cubic FT	liters	U.S.gal	cubic FT	Kg	LBS
21x62	1721	67.76	15	0.59	344	90.88	12.16	24.96	6.59	0.88	33.5	73.7
21x36	1002	39.45	15	0.59	164	43.33	5.80	24.96	6.59	0.88	24.1	53.0
21x53	1434	54.46	15	0.59	277	73.18	7.79	24.96	6.59	0.88	31.3	68.9

NOTES:

1 . TANK MUST MEET ALL APPLICABLE SPECIFICATIONS OF NSF/ANSI 044 STANDARD, LATEST REVISION.

2 . OPERATING SPECIFICATIONS:

A. MAXIMUM WORKING PRESSURE - 150 PSI(10.5BAR)

B. TEMPERATURE RANGE - 34-120° F(1-49℃)

C. MAXIMUM VACUUM - 5″Hg(127mm Hg)

3 . VISUAL LINER INSPECTION

A. NO MORE THAN 10 INTERNAL OR EXTERNAL BLEMISHES OR BURNT DEBRIS.

B. NO INTERNAL OR EXTERNAL BLEMISHES OR BURNT DEBRIS LARGER THAN 3×3mm.

C. NO INTERNAL BLEMISHES OR BURNT DEBRIS ALLOWED.

4 . ALL GLASS STRANDS FROM FIBERGLASS LINER TO BE BONDED AND COVERED.

5 . SURFACE TO BE FREE OF NICKS, SCRATCHES, RESIN AND GLASS.

6 . SURFACE FINISH.

7 . DIMENSIONS IN PARENTHESIS ARE REFERENCE ONLY.

8 . DIMENSIONS IN SQUARE PARENTHESIS ARE INCH UNIT.

8 . TANK TO BE BONDED TO BASE.

9 . USING A STANDARD LEVEL WITH TANK POSITIONED ON A LEVEL SURFACE, DATUM B TO BE PARALLEL WITH DATUM A. BUBBLE OF LEVEL MUST FALL COMPLETELY WITHIN LINES WHEN MEASURED AT 90° INTERVALS.

1:2.5

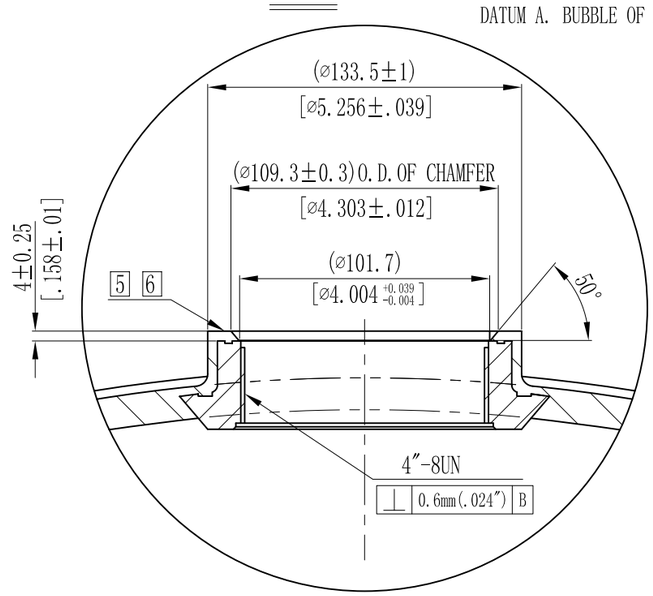

LENNTECH
info@lenntech.com Tel. +31-152-610-900
www.lenntech.com Fax. +31-152-616-289

VERSION NO.	DESCRIPTION OF CHANGES:	SIGNATURE	DATE
7	THIS DRAWING IS UPDATED COMPLYING WITH THE CHINESE VERSION		2009/02/02

REFERENTIAL PLASTIC SHRINKAGE (IF NECESSARY):

SIGNATURE	NAME	DATE
DESIGN		
INSPECTION		
APPROVAL		

THIS PRODUCT DRAWING CAN NOT BE COPIED AND/OR USED WITHOUT PRIOR WRITTEN APPROVAL OF WAVE CYBER.

WAVE CYBER (SHANGHAI) CO., LTD.

SCALE	MATERIAL	MODEL
1 : 5		DESCRIPTION: 21″FRP PRESSURE VESSEL (SINGLE OPENING)
QUANTITY	SMOOTHNESS	
PROJECTION	COMPUTER CODE	DRAWING NO. 111211-00 / VERSION NO. 7

DO NOT MEASURE THE DIMENSIONS. | UNIT: MM | TOTAL PAGE: 1